Chapter Seven

Intersections

The intersection of two or more roads presents an opportunity for conflict among vehicles. For freeways, the potential for conflict is significantly reduced through the use of interchanges. But interchanges usually are not feasible for the vast majority of intersections on arterials and collectors. This chapter is a general discussion of intersection design with those elements of particular application to this state. The details on intersection design are found in Chapter 9 of AASHTO's Green Book.

The principal objectives in the design of at-grade intersections are:

- To minimize the potential for and severity of conflicts,
- To provide adequate capacity, and
- To assure the convenience and ease of drivers in making the necessary maneuvers.

In the design of intersections there are three elements to consider:

(1) Perception-reaction distance,

(2) Maneuver distance, and

(3) Queue-storage distance.

The distance traveled during the perception-reaction time varies with vehicle speed, driver alertness, and driver familiarity with the location. Where left-turn lanes are introduced, this distance includes that to brake and change lanes. Where no turn lanes are provided, the distance needed is for the driver to brake comfortably. The storage length should be sufficient to accommodate the longest queue most commonly experienced.

An important consideration in the design of intersections is the treatment of right-turn lanes. Right turns can be free flowing, yield or stop controlled. In order to operate properly, free flowing right-turn lanes need to have an adequate acceleration distance free of access points for drivers to safely merge into the through traffic. Some drivers, particularly older drivers, are apprehensive when entering another leg of an intersection and may stop or slow down in the merge lane until the lane is clear of traffic. However, when properly designed, the majority of drivers will use the lane as proposed.

7.1 GENERAL CONSIDERATIONS

This section describes the various types of intersections and the general criteria that must be considered during design. Project intersection design configurations are developed during the project development phase based upon capacity analysis, accident studies, pedestrian use, bicycle use and transit options. In addition, design-hour turning movements, size and operating characteristics of the predominant vehicles, types of movements that must be provided, vehicle speeds, and existing and proposed adjacent land-use are considered.

Intersection designs range from a simple residential driveway to a complicated convergence of several high-volume multi-lane roadways. They all have the same fundamental design elements: (1) level of service, (2) alignment, (3) profile, (4) roadway cross section(s), and (5) sight distance. However, other

elements are introduced in intersection designs such as: speed-change lanes, turning lanes, auxiliary lanes, traffic islands, medians (flush and raised), channelization, pedestrian and bicycle accessibility, and traffic signalization.

When identified in the project scope of work, traffic calming measures may be a part of an intersection design. The Department's *Traffic Calming Design Manual* gives details on the alternative treatments and general design guidance including those for roundabouts. Additional information on the design of roundabouts can be found in FHWA's publication *Roundabouts: An Informational Guide.*

7.1.1 TYPES OF INTERSECTIONS

The three basic types of intersections are the three-leg or T-intersection (with variations in the angle of approach), the four-leg intersection, and the multi-leg intersection. Each intersection can vary greatly in scope, shape, use of channelization and other types of traffic control devices. The simplest and most common T-intersection is the private entrance or driveway. At the other extreme, a major highway intersecting another major highway usually requires a rather complex design.

7.1.2 LEVELS OF SERVICE

Levels of service for highway facilities were discussed in Chapter Two. The relationships between traffic volumes and highway capacity, together with operating speeds, provide a measure of the level of service. The characteristics of at-grade intersections can have a dramatic effect on capacity and the level of service.

Capacity analysis is one of the most important considerations in the design of intersections. Optimum capacities and improved conditions can be obtained when at-grade intersections include auxiliary lanes, proper use of channelization, and traffic control devices. The *Highway Capacity Manual* provides the procedures for analyzing the capacity of signalized and unsignalized intersections.

7.1.3 ALIGNMENT

Ideally, intersecting roads should meet at, or nearly at, right angles. Roads intersecting at acute angles require extensive turning roadway areas and tend to limit visibility, particularly for drivers of trucks. Acute-angle intersections increase the exposure time of vehicles crossing the main traffic flow and may increase the accident potential. Although a right angle crossing normally is desired, some deviation is permissible. Angles above approximately 60 degrees produce only a small reduction in visibility, which often does not warrant realignment closer to 90 degrees.

Intersections on sharp curves should be avoided wherever possible because the superelevation of pavements on curves complicates the design of the intersection. Also, this situation often leads to sight distance problems because of the sharp curve. It may be desirable to flatten the curve, or to introduce two curves separated by a tangent through the intersection. If either of these options is used, a substantial change in alignment may be necessary.

7.1.4 PROFILE

Combinations of grade lines that make vehicle control difficult should be avoided at intersections. The grades of intersecting highways should be as flat as practical on those sections that are to be used as storage space for stopped vehicles. Most vehicles must have the brakes applied to stand still unless they are stopped on a gradient flatter than 1 percent. Grades in excess of 3 percent generally should be avoided in the vicinity of intersections.

The profile grade lines and cross section on the legs of an intersection should be adjusted for a distance back from the intersection to provide a smooth junction and adequate drainage. Normally, the grade line of the major highway should be carried through the intersection, and that of the crossroad should be adjusted to it. This design requires transition of the crown of the minor highway to an inclined cross section at its junction with the major highway. For intersections with traffic

signals, or where signals may be warranted in the near future, it may be desirable to warp the crowns of both roads to avoid a pronounced hump or dip in the grade line of the minor highway. Intersections in superelevation areas are difficult to provide smooth grades or adequate drainage for and should be avoided.

7.1.5 FRONTAGE ROAD INTERSECTIONS

When a divided arterial highway is flanked by a frontage road, the problems of design and traffic control are more complex. Four separate intersections actually exist at each cross street.

The problem becomes more severe when the distance between the arterial and frontage road is relatively small. Generally, the outer separation between the two roadways should be 150 ft [50 m] or more.

Quite often, right-of-way considerations make it impractical to provide the full desired outer separation width. The alternative is to accept a narrow outer separation between cross roads and design a bulb-shaped separation in the immediate vicinity of each cross road.

7.1.6 DISTANCE BETWEEN INTERSECTIONS

Criteria for location, frequency and layout of private entrances and driveways are documented in DelDOT's *Standards and Regulations for Access to State Highways*. Illustrative sketches are shown for typical entrance and driveway designs for various conditions. For other types of public intersections, there are no fixed criteria as to frequency or distance between intersections. However, intersection spacing should provide sufficient distance to allow the proper development of all necessary turning lanes, bypass lanes, and, if signalized, proper signal coordination. Ideally this distance should be at least 350 ft [110 m] or more. Where intersections are closely spaced, several considerations should be kept in mind. It may be necessary to impose turn restrictions at some locations, prohibit pedestrian crossings, or provide frontage roads for access to intersecting roads. Where crossroads are widely spaced each at-grade intersection must necessarily accommodate all cross, turning and pedestrian movements.

7.2 TURNING MOVEMENTS

All intersections involve some degree of vehicular turning movements. There are various factors that influence the geometric design of turning lanes. The design controls for turning roadways are the traffic volume and types of vehicles making the turning movement. The roadway of primary concern is that used by right-turning traffic but may also be used for other roadways within the intersection. Figure 7-1 shows the terminology used when designing turning movements. The outer trace of the front bumper overhang and the path of the inner rear wheel establish the boundaries of the turning paths of a design vehicle.

The three typical types of designs for right-turning roadways in intersections are:

(1) A minimum edge-of-traveled-way design (Green Book, pages 583 to 621),

(2) A design with a corner triangular island (Green Book, pages 634 to 639), and

(3) A free-flow design using simple radius or compound radii (Green Book, pages 639 to 649). The turning radii and pavement cross slopes for free-flow right turns are functions of design speed and type of vehicle.

Figure 7-1
Design Vehicle Turning Terminology

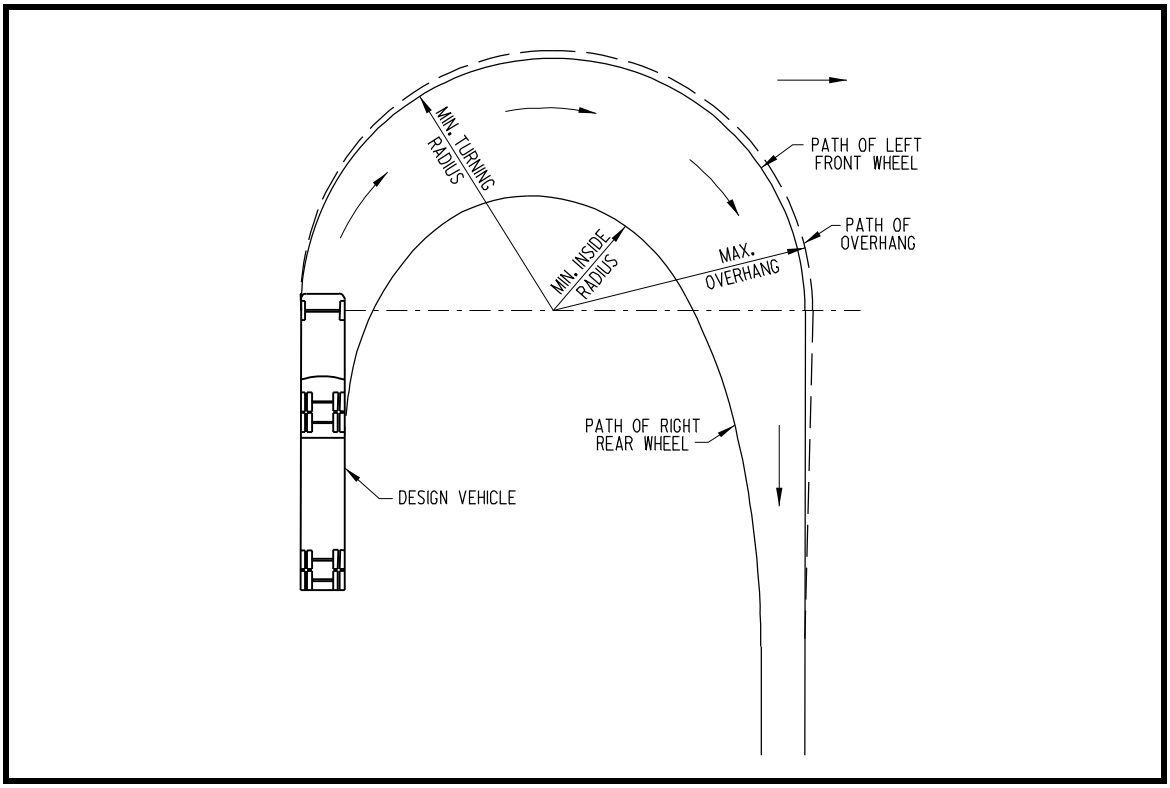

7.2.1 DESIGN VEHICLES

Design vehicles were briefly discussed in Chapter Two as a design consideration. The physical characteristics of vehicles using highways are positive controls in geometric design. The Division of Planning will provide the designer with information on existing and anticipated vehicle types and truck patterns. It is the designer's responsibility to examine this information and establish a representatively sized vehicle within each class for design use. Design vehicles are selected motor vehicles with the weight, dimensions and operating characteristics used to establish highway design controls for accommodating vehicles of designated classes.

The Division of Planning identifies each road section in terms of functional classification, as well as Traffic Pattern Group (TPG).

The functional classification system was discussed in Chapter Two. Each roadway segment on the state roadway system has been further classified into eight groups to represent the traffic characteristics (TPG) of vehicles using roads in the network. Visual observation in the field and permanent Automatic Vehicle Classifier (AVC) stations are used to classify vehicles resulting in the traffic composition for each road segment. A master summary table (Vehicle Classification Data Composition of Vehicle Percentages) is developed and available for designers to determine the percentage of the various types of vehicles using the facility under design. This table is directly related to the facility as defined by the Functional System.

During the classification process, vehicles are actually classified into thirteen vehicle classes ranging from motorcycles to seven or more axle multi-trailers. For design purposes these thirteen classes are combined into four

general classes of vehicles: (1) passenger cars, (2) buses, (3) trucks, and (4) recreational vehicles. The passenger car class includes passenger cars of all size, sport/utility vehicles, minivans, vans and pickup trucks. The bus class includes inter-city buses (motor coaches), city transit, school, and articulated buses. The truck class includes single-unit trucks, truck tractor-semitrailer combinations, and truck tractors with semitrailers in combination with full trailers. The recreational vehicle class includes motor homes, passenger cars with campers, cars with boat trailers, motor homes with boat trailers, and motor homes pulling cars. In addition, the bicycle should also be considered a design vehicle where applicable.

The dimensions for the design vehicles within these classes are listed in the Green Book. In the design process, the largest design vehicle likely to use that facility and its turning roadways with considerable frequency, or a design vehicle with special characteristics, is used to determine the design of such critical features as radii at intersections and radii of turning roadways.

A general guide to selecting a design vehicle is as follows:

- **P design vehicle** would be used for residential driveways, roadways with restricted truck use, local road intersections with a major roadway where use is infrequent, and low volume-minor road intersections. In most cases the selection of the SU design vehicle is preferred in all of these cases. The radii and widths permitted for the P design vehicle are very awkward for a single-unit delivery or service truck to safely maneuver.
- **SU design vehicle** provides the most economical minimum edge-of-traveled way design for rural roadways and other light truck use intersections. However, current and projected truck use on these roadways needs to be considered before a final design vehicle selection, particularly if any channelization is proposed.
- **Semitrailer combinations design vehicles** should be used where truck combinations will turn repeatedly, particularly heavily industrialized or commercial areas. Providing for these vehicles increases the paved areas, radii and other design parameters. Even in rural areas the local economy may be based on frequent semitrailer usage. Project development and scoping should identify these areas.

A project may have several design vehicles depending upon the predominant type of vehicle using the turning roadways being designed. A residential driveway would only need to consider a passenger car with an occasional single unit delivery truck. Industrial entrances would consider the predominant semi-trailer unit as the design vehicle. Other turning roadways and intersections would have to be similarly analyzed and an appropriate design vehicle selected. The purpose of this analysis is to assure the physical features are placed in positions that allow for the movement without making unsafe maneuvers, particularly within the through travel lanes, or destroying roadway features (curbs, signs, light poles, etc.).

Figure 7-2 shows selected minimum radii for the more commonly used design vehicles. Figure 7-3 (also see the Green Book, pages 216 to 224) shows the minimum design radii at the inner edge of the traveled way for roadway curves within an intersection based on a superelevation rate of 8.0 percent and free flow. For design speeds above 45 mph [70 km/h], the values are based on open road conditions. (See the Green Book, page 147.) At intersections controlled by stop signs, lower rates of superelevation are usually more appropriate. See the Green Book, pages 150 to 151, for urban streets.

Figure 7-2
Minimum Turning Radii for Selected Design Vehicles

Design Vehicle Type	Symbol	US Customary		Metric	
		Minimum Design Radius (ft)	Minimum Inside Radius (ft)	Minimum Design Radius [m]	Minimum Inside Radius [m]
Passenger Car	P	24	14.4	7.3	4.4
Single Unit Truck	SU	42	28.3	12.8	8.6
Intercity Bus	BUS-40 [BUS-12]	45	27.6	13.7	8.4
City Transit Bus	City-Bus	42	24.5	12.8	7.5
Conventional School Bus (65 pass.)	S-BUS36 [S-BUS11]	38.9	23.8	11.9	7.3
Large School Bus (84 pass.)	S-BUS40 [S-BUS12]	39.4	25.4	12.0	7.7
Intermediate Semi-trailer	WB-40 [WB-12]	40	19.3	12.2	5.9
Intermediate Semi-trailer	WB-50 [WB-15]	45	17.0	13.7	5.2

Figure 7-3
Minimum Radii at Inner Edge of Traveled Way for Intersection Curves–Free Flow

US Customary	
Design Speed (turning) (mph)	Minimum Radius (ft)
10	25
15	50
20	90
25	150
30	230
35	310
40	430
45	540
Metric	
Design Speed (turning) [km/h]	Minimum Radius [m]
10	7
20	10
30	25
40	50
50	80
60	115
70	160

7.2.2 EDGE-OF-TRAVELED-WAY DESIGNS

In the design of the edge of pavement for the minimum path of a given design vehicle, it is assumed that the vehicle is properly positioned within the traffic lane at the beginning and end of the turn. This position is 2 ft [0.6 m] from the edge of 12 ft [3.6 m] wide pavements on the tangents approaching and leaving the intersection curve.

Three types of curves commonly are used for the design of pavement edges at intersections:

- simple curve,
- 3-centered symmetric compound curve, and
- 3-centered asymmetric compound curve.

Use of the simple curve usually is limited to residential driveways and low traffic volume intersections where there is little truck traffic. The 3-centered curve should be used

for edge-of-traveled-way design at all major intersections. Figures 7-4 and 7-5 illustrate the three types of edge-of-traveled-way designs. The Green Book, Exhibits 9-19 and 9-20 on pages 584 through 591 tabulate values for application of simple and three-centered compound curve applications for various angles of turning roadways. The angle of turn that is the next highest to the angle of turn of the intersection being designed should be selected.

Figure 7-4
Intersection Edge-of-Traveled-Way Design Layout
Using Simple Curves

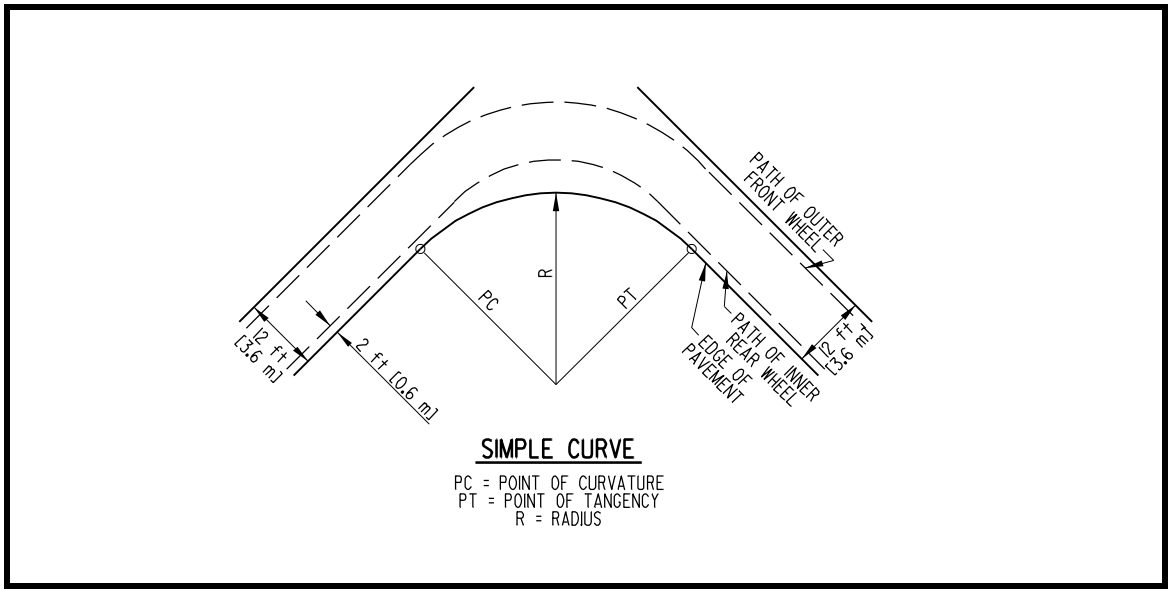

7.2.3 PAVEMENT WIDTHS FOR TURNING ROADWAYS

The pavement and roadway widths of turning roadways at intersections are governed by the volumes of turning traffic and the types of vehicles to be accommodated, and may be designed for one-way or two-way operation, depending on the geometry of the intersection. Widths determined for turning roadways may also apply on through roadways within an intersection, such as channelizing islands.

Pavement widths for turning roadways are classified for the following types of operations:

Case I – one-lane, one-way operation with no provision for passing a stalled vehicle;

Case II – one-lane, one-way operation with provision for passing a stalled vehicle; and

Case III – two-lane operation, either one-way or two-way.

Case I widths are normally used for minor turning movements and for moderate turning volumes where the connecting roadway is relatively short. The chance of vehicle breakdown is remote under these conditions, but one of the edges of pavement should be available for passing a stalled vehicle, i.e. mountable curb and clear of obstructions.

Figure 7-5
Intersection Edge-of-Traveled-Way Design Layout
Using 3-Centered Compound Curves

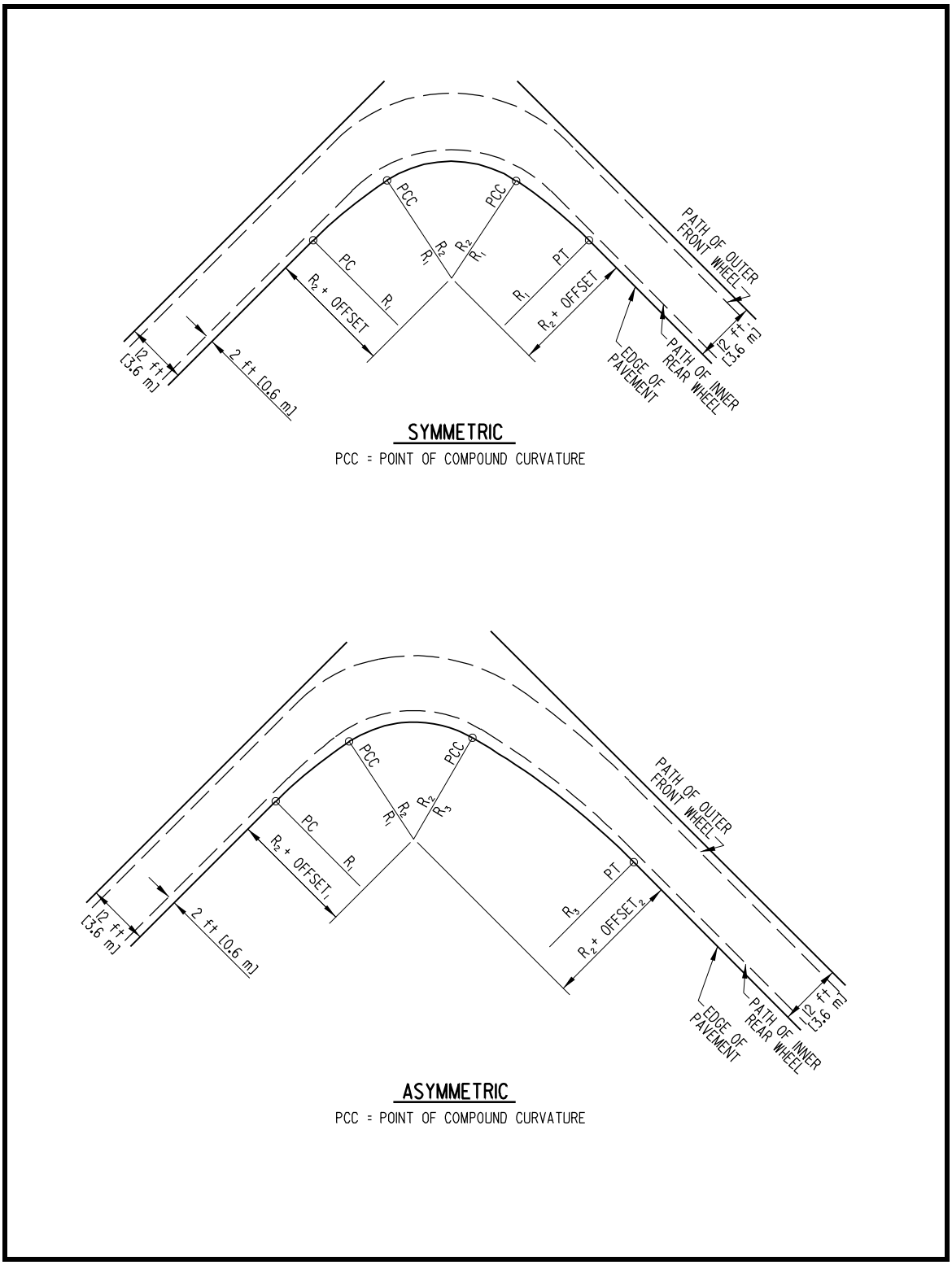

Case II widths are determined to allow operation at low speed and with restricted clearance past a stalled vehicle. These widths are applicable to all turning movements of moderate to heavy volumes that do not exceed the capacity of a single-lane connection. In the event of a breakdown, traffic flow can be maintained at somewhat reduced speed. Many ramps and connections at channelized intersections are in this category.

Case III widths apply where operation is two-way, or one-way with two lanes needed to handle the traffic volume. In the latter case, downstream lanes must be able to accommodate the two-lane volume. In each category the required pavement width depends jointly on the size of the design vehicle and the curvature of the turning roadway. Selection of the design vehicle is based on the size and frequency of vehicle types. The pavement width increases with both the size of the design vehicle and the sharpness of curvature. See Figures 7-6 and 7-7 for the recommended design widths of pavements for turning roadways at intersections for three types of operations and for three conditions of traffic mixes.

The designer should refer to the Green Book, pages 199 to 229, for further details on designing turning roadways within intersections.

7.3 CHANNELIZATION

Channelization is the separation or regulation of conflicting-traffic movements into definite paths of travel by traffic islands or pavement markings to facilitate the safe and orderly movement of both vehicles and pedestrians. Proper channelization increases capacity, improves safety, provides maximum convenience, and instills driver confidence. Improper channelization has the opposite effect and may be worse than none at all. Over channelization should be avoided because it could create confusion and deteriorate operations.

7.3.1 PURPOSE

Channelization of at-grade intersections is generally warranted for one or more of the following factors:

- The paths of vehicles are confined by channelization so that not more than two paths cross at any one point.
- The angle and location at which vehicles merge, diverge or cross are controlled.
- The paved area is reduced, thereby narrowing the area of conflict between vehicles and decreasing the tendency of drivers to wander.
- Clearer indications are provided for the proper path in which movements are to be made.
- The predominant movements are given priority.
- Areas provide for pedestrian refuge.
- Separate storage lanes permit turning vehicles to wait clear of through-traffic lanes.
- Space is provided for traffic control devices so they can be more readily perceived.

  Prohibited turns are controlled.

7.3.2 DESIGN PRINCIPLES

Design of a channelized intersection usually involves the following significant controls—the type of design vehicle, the cross sections on the crossroads, the projected traffic volumes in relation to capacity, the number of pedestrians, the speed of vehicles, and the type and location of traffic control devices. Furthermore, physical controls such as right-of-way and terrain have an effect on the extent of channelization that is economically feasible.

Figure 7-6
Design Widths for Turning Roadways (US Customary)

Radius on Inner Edge R (ft)	Pavement Width (ft)								
	Case I One-Lane, One-way Operation—No Provision for Passing a Stalled Vehicle			Case II One-Lane, One-way Operation—With Provision for Passing a Stalled Vehicle			Case III Two Lane Operation Either One Way Or Two Way		
	Design Traffic Conditions								
	A	B	C	A	B	C	A	B	C
50	18	18	23	20	26	30	31	36	45
75	16	17	20	19	23	27	29	33	38
100	15	16	18	18	22	25	28	31	35
150	14	15	17	18	21	23	26	29	32
200	13	15	16	17	20	22	26	28	30
300	13	15	15	17	20	22	25	28	29
400	13	15	15	17	19	21	25	27	28
500	12	15	15	17	19	21	25	27	28
Tangent	12	14	14	17	18	20	24	26	26
Width Modification Regarding Edge Treatment:									
No stabilized Shoulder	None			None			None		
Mountable curb	None			None			None		
Barrier curb: ** one side two sides	Add 1 ft Add 2 ft			None Add 1 ft			Add 1 ft Add 2 ft		
Stabilized shoulder, one or both sides	Lane width for conditions B and C on tangent may be reduced to 12 ft where shoulder is 4 ft or wider			Deduct shoulder width; minimum width as under Case I			Deduct 2 ft where shoulder is 4 ft or wider		

Note:

Traffic Condition A = predominately P vehicles, but some consideration for SU trucks.

Traffic Condition B = sufficient SU vehicles to govern design, but some consideration for semi-trailer combination vehicles.

Traffic Condition C = sufficient bus and combination-trucks to govern design.

** Dimension to face of curb; gutter pan included with surface width.

Figure 7-7
Design Widths for Turning Roadways [Metric]

Radius on Inner Edge R [m]	Pavement width [m]								
	Case I One-Lane, One-way Operation—No Provision for Passing a Stalled Vehicle			Case II One-Lane, One-way Operation—With Provision for Passing a Stalled Vehicle			Case III Two Lane Operation Either One Way Or Two Way		
	Design Traffic Conditions								
	A	B	C	A	B	C	A	B	C
15	5.4	5.5	7.0	6.0	7.8	9.2	9.4	11.0	13.6
25	4.8	5.0	5.8	5.6	6.9	7.9	8.6	9.7	11.1
30	4.5	4.9	5.5	5.5	6.7	7.6	8.4	9.4	10.6
50	4.2	4.6	5.0	5.3	6.3	7.0	7.9	8.8	9.5
75	3.9	4.5	4.8	5.2	6.1	6.7	7.7	8.5	8.9
100	3.9	4.5	4.8	5.2	5.9	6.5	7.6	8.3	8.7
125	3.9	4.5	4.8	5.1	5.9	6.4	7.6	8.2	8.5
150	3.6	4.5	4.5	5.1	5.8	6.4	7.5	8.2	8.4
Tangent	3.6	4.2	4.2	5.0	5.5	6.1	7.3	7.9	7.9
Width Modification Regarding Edge Treatment:									
No stabilized Shoulder	None			None			None		
Mountable curb	None			None			None		
Barrier curb: ** one side two sides	Add 0.3 m Add 0.6 m			None Add 0.3 m			Add 0.3 m Add 0.6 m		
Stabilized shoulder, one or both sides	Lane width for conditions B and C on tangent may be reduced to 3.6 m where shoulder is 1.2 m or wider			Deduct shoulder width; minimum width as under Case I			Deduct 0.6 m where shoulder is 1.2 m or wider		

Note:

Traffic Condition A = predominately P vehicles, but some consideration for SU trucks.

Traffic Condition B = sufficient SU vehicles to govern design, but some consideration for semi-trailer combination trucks.

Traffic Condition C = sufficient bus and combination-trucks to govern design.

** Dimension to face of curb; gutter pan included with surface width.

Certain principles should be followed in the design of a channelized intersection, but the extent to which they are applied will depend on the characteristics of the total design plan. These principles are:

- Motorists should not be confronted with more than one decision at a time.
  - Unnatural paths that require turns greater than 90° or sudden and sharp reverse curves should be avoided.
- Areas of vehicle conflict should be reduced as much as possible. Channelization should be used to keep vehicles within well-defined paths that minimize the area of conflict.
- The points of crossing or conflict should be studied carefully to determine if such conditions would be better separated or consolidated to simplify design with appropriate control devices added to ensure safe operation.
- Refuge areas for turning vehicles should be provided clear of through traffic.
- Prohibited turns should be blocked wherever possible.
- Location of essential control devices should be established as a part of the design of a channelized intersection.
- Channelization may be desirable to separate the various traffic movements where multiple-phase signals are used.

7.3.3 ISLANDS

Design of islands is the principal concern in channelization. An island is a defined area between traffic lanes for control of vehicle movements. Islands may be delineated or outlined by a variety of treatments, depending on their size, location and function. Types of delineators include: (1) raised islands outlined by curbs, (2) islands delineated by pavement markings, and (3) non-paved areas formed by the pavement edges–possibly supplemented by delineators on posts or other guide posts.

Islands provide three major functions:

- **Channelizing islands** control and direct traffic movement, usually turning;
- **Divisional islands** divide opposing or same-direction traffic streams, usually through movements; and
- **Refuge islands** provide refuge for pedestrians and bicyclists.

Most islands combine two or all of these functions. Triangular channelizing islands, used for roadways, subdivision street entrances or commercial driveway entrances, serve all three functions where there are pedestrian facilities.

Islands should be sufficiently large to command attention, and to accommodate pedestrian refuge and pedestrian signal poles where they are needed. Curbed islands normally should be no smaller than 50 ft^2 [5 m^2] for urban streets and about 75 ft^2 [7 m^2] for rural intersections; however, 100 ft^2 [9 m^2] minimum is preferred for both. Triangular islands should not be less than 12 ft [3.6 m], preferably 15 feet [4.5 m], on a side before rounding the corners; those with curb ramps, pedestrian refuge and pedestrian signal poles should have sides at least 15 ft [4.5 m] and preferably 20 feet [6.0 m] on a tangent side resulting in a minimum island area of 175 ft^2 [16 m^2]. Median islands narrower than 8 ft [2.4 m] from back of curb to back of curb cannot be mowed effectively; therefore they should be paved. Elongated or divisional islands should not be less than 4 ft [1.2 m] wide, 6 ft [1.8 m] if pedestrians are anticipated and 20 to 25 ft [6.0 to 8.0 m] long.

DelDOT has adopted general rules for the placement of islands. The first preference is to design the intersection with radii that accommodate the selected design vehicle path without creating large open paved areas requiring the need for islands to direct traffic. The overriding criteria are operational efficiency and safety. In many locations the best way to accomplish this is with islands. Curbed islands usually provide the better alternative to delineate the location, minimize maintenance and control drainage. Using the proper type of curb and offsets are important design considerations. Full shoulder width offset and mountable P.C.C. Curb, Type 2, are the preferred design elements. Typically, the island is offset from the traveled way the full width of the

shoulder or turn lane. This offset may be reduced where necessary as determined by a traffic study to only five feet to accommodate bicycles under the following conditions:

- Urban, suburban and developing areas where, due to queue lengths and congestion, traffic needs to be discouraged from using the shoulder to pass on the right.
- Commercial driveway entrances or streets leading up to an urban, suburban or developing intersection to prevent illegal shoulder traffic before the deceleration lane. Here, the island also offers protection to the vehicle entering the highway and prevents a car crossing the highway entering the business or side street from being involved in an angle crash.
- Crosswalks where pedestrian refuge and shortening the length of the crossing is needed, particularly with signalization.

In areas with high pedestrian traffic where there is a need to minimize the distance between refuge areas, the offset for bicycles may be reduced to 4 ft [1.2 m] from an approaching curbed section; in this case, it is preferable to offset the nose of larger islands 4 to 6 ft [1.2 to 2 m] from approaching curbed lanes to allow an errant vehicle to recover before striking the curb. To accommodate the variety of vehicle, pedestrian and bicycle movements in urban areas, various offsets and configurations may be needed within the same intersection.

Figures 7-8 and 7-9 show a typical preferred island layout for rural and urban conditions.

No matter what the island configuration:

- Positive drainage must be provided for the safety of vehicles and pedestrians.
- The corners of the island shall be flush with the pavement, tapering back to full height at a slope of 4:1 for triangular channelizing islands and 10 feet [3.05 m] for median islands (where the sleeve for the "Keep Right" sign would be placed) for snow plowing operations and errant vehicles.
- The corners of islands not offset the full width of the shoulder adjacent to the roadway shall be delineated with tubular delineators.

Figure 7-8
Typical Island Layout–Rural Areas

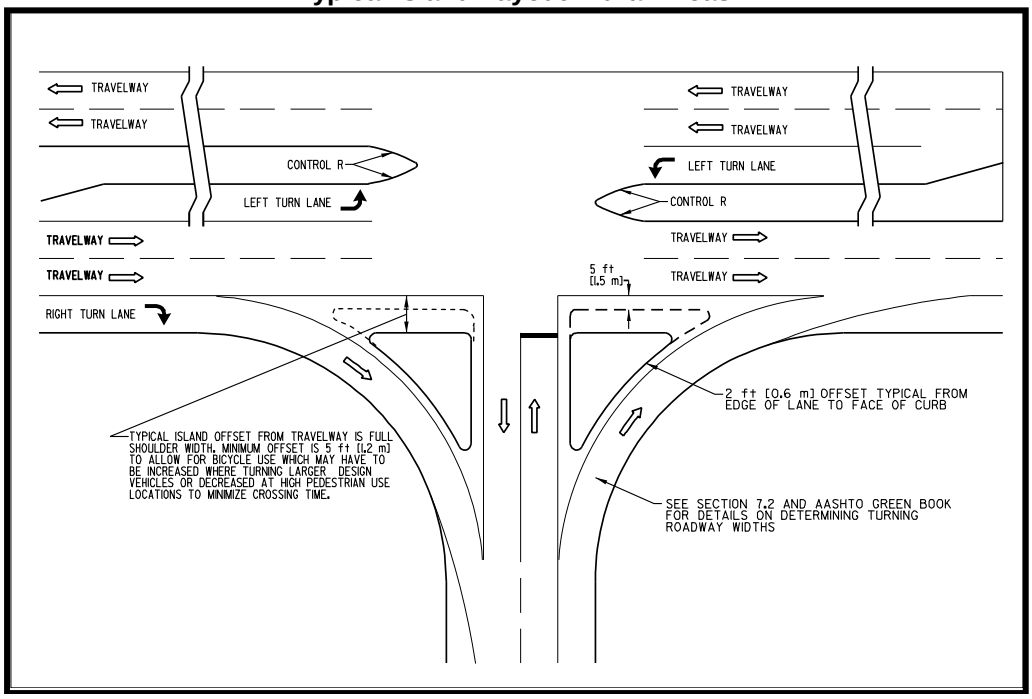

Figure 7-9
Typical Island Layout–Urban Areas

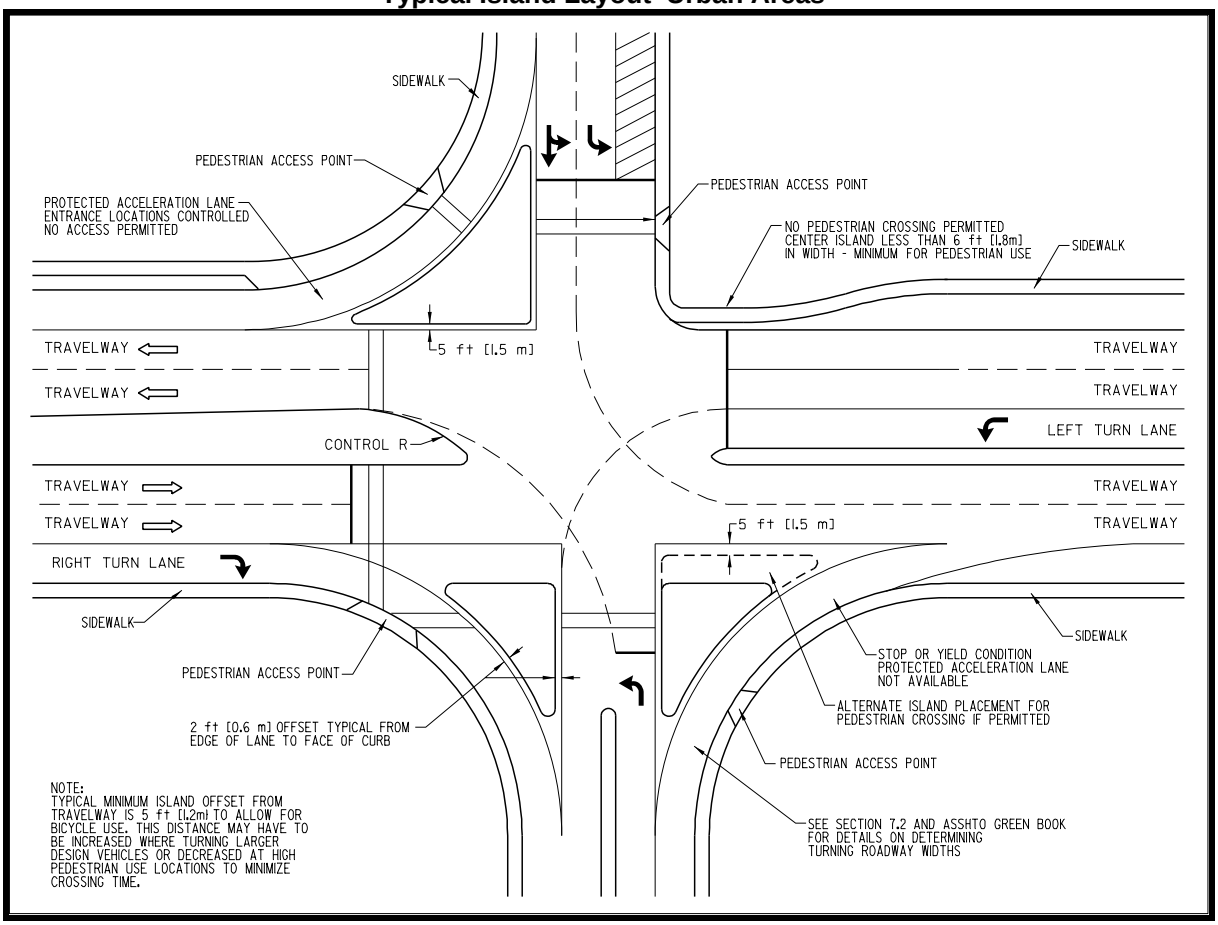

.../DGN/New Figure 7-09.dgn 06/12/2003 11:07:24 AM

7.4 SIGHT DISTANCE

The operator of a vehicle approaching an at-grade intersection should have an unobstructed view of the whole intersection and of a sufficient length of the intersecting highway to permit control of the vehicle to avoid collisions which is termed "approach sight distance". (See Figure 7-10.) The minimum sight distance considered safe under various assumptions of physical conditions and driver behavior is directly related to vehicle speeds and the resultant distances traversed during perception, reaction time, and braking. In addition to approach sight distance, sight distance is also provided to allow stopped vehicles sufficient view of the intersecting roadway to decide when to enter the intersecting roadway or to cross it, which is "departure sight distance." Both sight distances must be checked on all intersection designs based on the procedures set forth in the Green Book, pages 650 to 679.

7.4.1 MINIMUM SIGHT DISTANCE TRIANGLE

Sight triangles are areas of unobstructed sight along both roads at an intersection and across their included corner for a distance sufficient to allow the operators of vehicles approaching simultaneously to see each other in time to prevent collision at the intersection.

The length of the legs may vary based upon traffic volumes, design speeds, operating speeds and type of intersection traffic control.

Normally in less densely populated areas the minimum sight distance of any leg would be that required to meet the design stopping sight distance for the major road. At high volume intersections the need for large sight triangles is diminished and is a function of the types of traffic control devices and the presence or absence of other vehicles. The Green Book, pages 654 to 679, provides details for determining sight triangles for several different conditions that may occur at intersections, primarily based on the type of traffic control.

In each case, assumptions are made about the physical layout and the actions of vehicle operators on both intersecting roads. For each case, the space-time-velocity relations indicate the minimum sight triangle that is required to be free of obstructions. Any object within the sight triangle high enough above the elevation of the adjacent obstruction should be removed or lowered. Such objects include cut slopes, trees, hedges, bushes, or tall crops. There should be no parking within the sight triangle.

The minimum stopping sight distance in the Green Book for open highway conditions are also valid for turning roadway intersections of the same design speed. Figure 7-11 includes stopping sight distance for lower turning speeds than commonly used under open roadway conditions. These values should be available at all points along a turning roadway, and should be increased wherever practical. They apply to both vertical and horizontal alignment.

Figure 7-10
Sight Distance Triangles—Elements for At-Grade Intersections

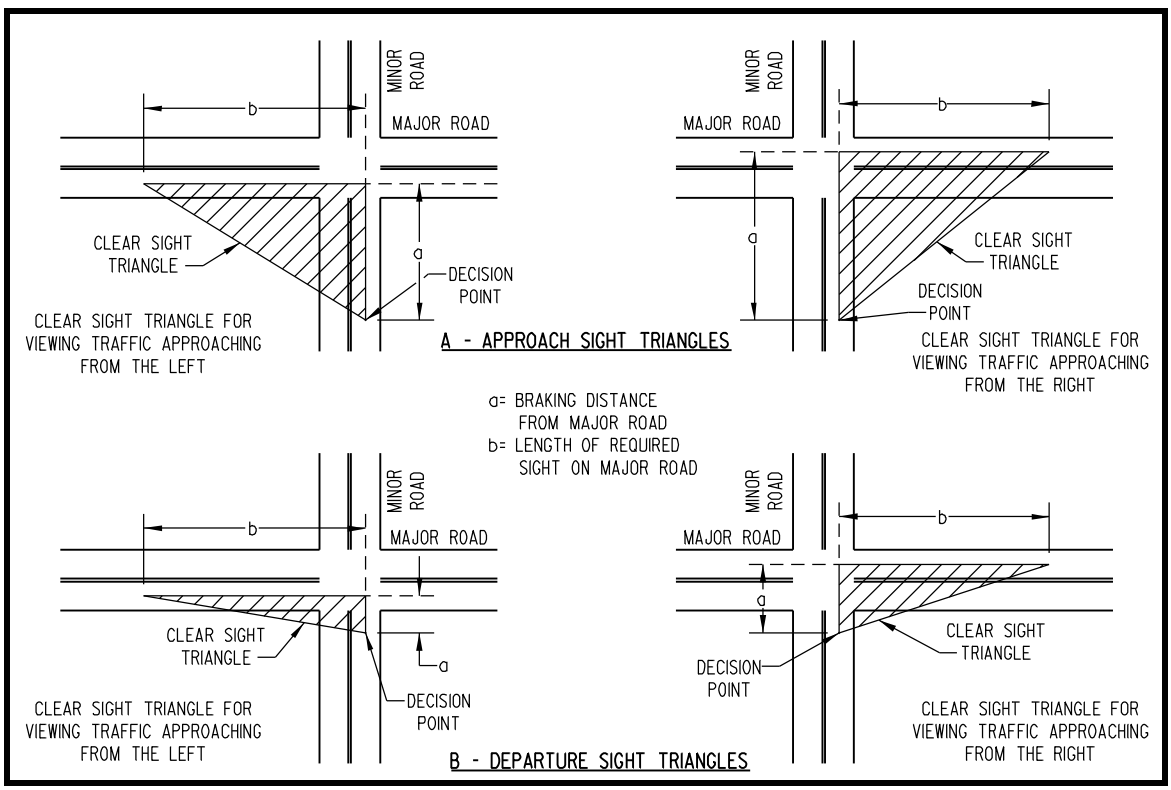

Figure 7-11
Minimum Stopping Sight Distance for Turning Roadways at Intersections

US Customary	
Design (Turning)Speed (mph)	**Stopping Sight Distance (ft)**
10	50
15	80
20	115
25	155
30	200
35	250
40	305
45	360
Metric	
Design (Turning)Speed [km/h]	**Stopping Sight Distance [m]**
15	15
20	20
30	35
40	50
50	65
60	85
70	105

7.4.2 INTERSECTION MANEUVERS

When traffic on the minor road of an intersection is controlled by stop signs, the driver of the vehicle on the minor road must have sufficient sight distance for a safe departure from the stopped position. There are three basic maneuvers that occur at the average intersection. These maneuvers are:

1. To travel across the intersecting roadway by clearing traffic from both the left and the right of the crossing vehicle,
2. To turn left into the crossing roadway by first clearing traffic on the left and then entering the traffic stream with vehicles from the right, and
3. To turn right into the intersecting roadway by entering the traffic stream with vehicles from the left.

The stop condition criterion is applicable to two-lane, two-directional roadways through multi-lane divided highways. Where the principal roadway is either undivided or divided with a narrow median (the median is too narrow to store the design vehicle), the departure maneuvers are treated as a single operation. Where the major roadway is divided and has a median wide enough to safely store the design vehicle, the departure maneuvers are considered as two operations. The first operation concerns the traffic approaching from the left for all three maneuvers; that is, crossing the entire roadway, crossing part of the roadway and turning left into the crossroad or turning right into the crossroad. The second phase concerns traffic from the right for the first two operations; i.e., continuing to cross the major roadway or turning left and merging with traffic from the right. The Green Book, pages 650 to 679, provides details on analyzing the departure sight triangles for these maneuvers.

7.5 AUXILIARY TURNING LANES

Auxiliary turning lanes may be introduced at intersections under a variety of conditions including rural or urban locations and free flowing, signalized or stop controlled traffic designs. Using auxiliary lanes to handle turning movements at high volume intersections can reduce congestion, improve safety and provide better traffic control. Auxiliary lanes are also used on four-lane divided roadways and high volume two lane roadways under open road conditions. They improve safety and traffic flow when introducing median openings, intersections at minor crossroads or U-turn locations.

Auxiliary lanes include left and right-turn deceleration lanes or right turn acceleration lanes. The length of auxiliary lanes depends on local conditions, traffic volumes, traffic mix, design speed, posted speed, selected level of service, and operating speeds. Auxiliary lanes should be 12 ft [3.6 m] wide to minimize encroachment of turning vehicles upon the adjacent travel way. In restricted urban locations where space is limited and operating speeds are low, a minimum of 10 ft [3.0 m] plus the curb offset may be the only width attainable.

Providing an area for traffic to maneuver outside of the through lanes is a very important capacity and safety feature. However, the cost of introducing auxiliary lanes is significant. Guidelines for determining the need for left-turn lanes at both signalized and unsignalized intersections have been developed. These guidelines are based on the number of lanes, the design speed, the operating speed, left-turn volumes, and opposing-traffic volumes.

For signalized intersections, a general guide is that left-turn lanes should be considered when:

- Left-turn volumes exceed 20% of the total approach volume.
- Left-turn vehicles exceed 100 vehicles during peak hour.

For unsignalized intersections, left-turn lanes should be provided:

- At all median openings on high-speed divided highways.
- On approaches where sight distance is limited.
- At non-stopping approaches of rural arterials and collectors.
- At other approaches where required based on capacity and operational analysis.

There may be other needs, primarily safety, for left-turn lanes at other locations than mentioned in these general guidelines. For two-lane roadways, a high-volume, intersecting minor roadway or entrance may also create the need to separate movements with auxiliary turning lanes.

Figure 7-12 is a tabulated guide to traffic volumes where left-turn lanes should be considered on two-lane highways. For the values shown, left-turns and right turns from the minor street can be equal to, but not greater than, the left-turns from the major street. Introducing left turn movements on a two-way roadway is more complex than on a divided highway. The design involves safely introducing two new center lanes and transitioning the two approach lanes. The design approach is shown on Figure 7-13. Figures 7-14, 15 and 16 are graphical presentations of the data presented in Figure 7-12.

In commercial and industrial areas it may be practical to provide a continuous left-turn lane in the median. Areas evaluated usually have high property values, very restricted right-of-way, and a level of development that results in many points of access to accommodate left-turning vehicles. A general criteria of 45 access points or more (both sides of road) per mile [2 kilometers] with through traffic flow rates less than 1,000 vph in each traffic direction may suggest that a continuous left turn lane would benefit safety and traffic flow. This can be accomplished by having a paved, flush median of 14 to 16 ft [4.2 to 4.8 m] in width. This area can be used for left-turn maneuvers by traffic in either direction. Continuous left-turn lanes should be used only on lower speed roadways with not more than two through lanes in either direction.

The length of a deceleration lane consists of three components: (1) entering taper, (2) deceleration length, and (3) storage length. Desirably, the total length of the auxiliary lane should be the sum of the lengths of these three components. Conditions may require the designer to accept a moderate amount of deceleration within the through lanes and to consider the taper a part of the deceleration length. Tapers are used to transition from the through lane into the full width auxiliary lane. Straight

tapers at least 100 ft [30 m] long should be used for deceleration lanes.

The designer has at least four methods available (listed from the preferred to the least acceptable) for determining deceleration lane lengths: (1) design the intersection in accordance with the HCM based on detailed existing and projected traffic data, (2) provide the desirable lengths as discussed in the Green Book (3) design left turn lanes based on the methodology shown on Figure 7-17 or (4) provide the minimum lengths as discussed in this section and shown in Figure 7-18. The use of each of these approaches is also dependent upon the roadway classification, type of facility, the location of the intersection within the facility, project scope and funding.

The Green Book proposes that for arterials with a selected design speed of 30, 40, 45, 50 and 55 mph [50, 60, 70, 80 and 90 km/h], the desirable deceleration lengths of the auxiliary lanes, where practical, are 170, 275, 340, 410 and 485 ft [50, 70, 95, 120 and 150 m], respectively. These lengths allow the driver to comfortably decelerate to a full stop from the full design speed with grades of 3 percent or less. These values do not include taper or required storage length.

The Green Book further discusses the fact that on many urban facilities providing the full length is not practical, physically possible or economically reasonable to provide the suggested desirable lengths needed for decelerating from design speed or operating speed to a full stop condition. On urban facilities in densely developed areas, the need for storage length may override the desirable deceleration length. The Green Book concludes that on urban and collectors the designer may assume that a portion of the deceleration speed is accomplished in the through lane and/or on the taper before entering the full width auxiliary lane. The Green Book further states that: “Therefore, the lengths given above should be accepted as a desirable goal and should be provided where practical.”

Figure 7-17 illustrates a design methodology for determining a reasonable minimum length for an auxiliary turning lane under open highway conditions when complete traffic data is not available. In this figure, the typical average running speed on the main facility is used and some deceleration for the left-turn movement is assumed to occur prior to entering the turning lane. Based on assumed vehicle approach speeds, the desirable deceleration lengths are shown in Figure 7-18. See the Green Book, page 851, for lengths applicable to other exit curve design speeds.The lengths shown do not include any taper lengths or required storage lengths. These lengths are for open highway conditions. It should be recognized that operating speeds, traffic volumes, traffic mix, type of facility, project intent, roadside development, and intersection frequency and spacing all influence a designer’s ability to provide the lengths shown in Figure 7-18.

To reiterate, in the use of Figure 7-17, DelDOT has adopted the recognition in the Green Book, page 714, that a degree of deceleration can safely take place in the through lane depending upon posted speed, type of facility and traffic volumes. The suggested design approach for arterial and other high volume roadways assumes a reduction of 10 mph [15 km/h] below posted speed occurs in the through lane. For collectors and other medium volume roadways, an assumed reduction of 15 mph [20 km/h] is practical. For low volume collectors and local streets, a reduction of 20 mph [30 km/h] below the posted speed may be assumed in the design of auxiliary lanes. The deceleration lengths shown in the figures are applicable to both left and right-turn lanes.

Figure 7-17 is a general guide for use when the designer does not have existing or projected traffic volumes or turning counts. When this data is available the length and design of auxiliary lanes should be analyzed in accordance with the HCM.

Figure 7-12
Guide for Need for Left-Turn Lanes on Two Lane Highways

Opposing volume (vph)	Advancing volume (vph)			
	5% Left turns	10% Left turns	20% Left turns	30% Left turns
40-mph [60 km/h] operating speed				
800	330	240	180	160
600	410	305	225	200
400	510	380	275	245
200	640	470	350	305
100	720	515	390	340
50 mph [80 km/h] operating speed				
800	280	210	165	135
600	350	260	195	170
400	430	320	240	210
200	550	400	300	270
100	615	445	335	295
60 mph [100 km/h] operating speed				
800	230	170	125	115
600	290	210	160	140
400	365	270	200	175
200	450	330	250	215
100	505	370	275	240

For signalized intersections when there are no current or projected traffic counts or studies available to indicate the needed storage length, then the following method suggested by AASHTO can be applied.

Storage length is based on the number of vehicles likely to arrive in an average cycle time period within the peak hour in accordance with the following formula:

$$S.L. = (N \ / \ C) \times V.L. \times 1.5$$

Where:

S.L. = Storage Length,
V.L. = Vehicle length—use 20 ft [6.0 m] for passenger cars,
N = Number of left-turn vehicles in peak hour, and
C = Number of cycles per hour.

At unsignalized intersections, the average cycle time is assumed to be 2 minutes, so:

$$C = \frac{60 \text{ minutes per hour}}{2 \text{ minutes}} = 30$$

At signalized intersections, "C" is computed using the actual cycle time, so:

$$C = \frac{60 \text{ minutes per hour}}{\text{Actual cycle time in minutes}}$$

Where there is a demonstrated need due to turning volumes versus available gaps in the opposing traffic, the recommended minimum storage length for median auxiliary lanes is 50 ft [15 m]; for separate left turn facilities where no median exists, the minimum recommended storage length is 100 ft [30 m]. These lengths will allow for storing one P and one SU design vehicle or an occasional WB-50 [WB-15]. The greater length where there is no median provides allowance for a decrease in available turning paths.

Acceleration lanes for right-turning vehicles entering a traveled way may need to be considered when turning volumes exceed 100 vph. However, as discussed earlier in this chapter acceleration lanes are not always desirable where entering drivers can wait for an opportunity to merge without disrupting through traffic, such as at a signalized intersection. The use of acceleration lanes should generally be restricted to rural, free-flow, or

controlled access situations. The length of the acceleration lane is a function of the pooled highway speed and speed of the turning vehicle as shown in Figure 7-19. The Green Book, page 847, gives additional lengths for other selected entrance curve design speeds.

7.5.1 MINIMUM TURN LANE LENGTHS

A project's intent or funding may not allow for providing the desirable left-turn lengths as suggested in the Green Book, or be designed in accordance with the HCM or the method shown on Figure 7-17. In this situation and for uniform application, the suggested minimum lengths for left turn lanes are as described in this section. The parameters are:

- Suggested minimum lengths apply to divided roadways at unsignalized locations.
- No previously identified history of problems with accidents, operation or safety.
- No established warrants based on traffic volume.
- Locations with observed or anticipated high truck use need more storage length.

The lengths are determined by general class of roadway. It should be recognized that each location is unique and has to be analyzed based on its characteristics, including traffic control devices and the selected length may be different than those that follow.

Divided rural arterials and collectors with moderate to heavy through traffic with a posted speed of 50 mph [80 km/h] or greater use a taper length of 100 ft [30 m], deceleration length of 250 ft [75 m], and storage length 100 ft [30 m].

Divided rural arterials and collectors with light through traffic and a posted speed of 50 mph [80 km/h] or greater use a taper length of 100 ft [30 m], deceleration length of 150 ft [45 m], and storage length of 50 ft [15 m].

Divided urban arterials and collectors with heavy to moderate through traffic and a posted speed of 50 mph [80 km/h] or less use a taper length of 100 ft [30 m], deceleration length of 200 ft [60 m], and storage length of 100 ft [30 m].

Divided urban arterials and collectors with light through traffic and a posted speed of 50 mph [80 km/h] or less use a taper length of 100 ft [30 m], deceleration length of 200 ft [60 m], and storage length of 50 ft [15 m].

The designer should refer to the Green Book and the HCM for further discussion concerning these guidelines.

7.6 MEDIAN OPENINGS

The following is a general discussion of median opening design. The Green Book, pages 689 to 728, presents a comprehensive discussion on the concepts and design of median openings.

Median opening designs range from designing for simple U-turn movements to the more complex unsignalized and signalized rural and urban intersections that may include traffic from minor crossroads and streets or major roadways and commercial entrances. The design of median openings and median end treatments is based on traffic volumes, operating speeds, predominant types of turning vehicles and median width. Crossing and turning traffic must operate in conjunction with the through traffic on a divided highway. This requirement makes it necessary to know the volume and composition of all movements occurring simultaneously during the design hour. The discussion in this section is primarily directed to rural, unsignalized, divided roadways.

Figure 7-13
Typical Turning Lane Design for Two-lane Two-way Roadways

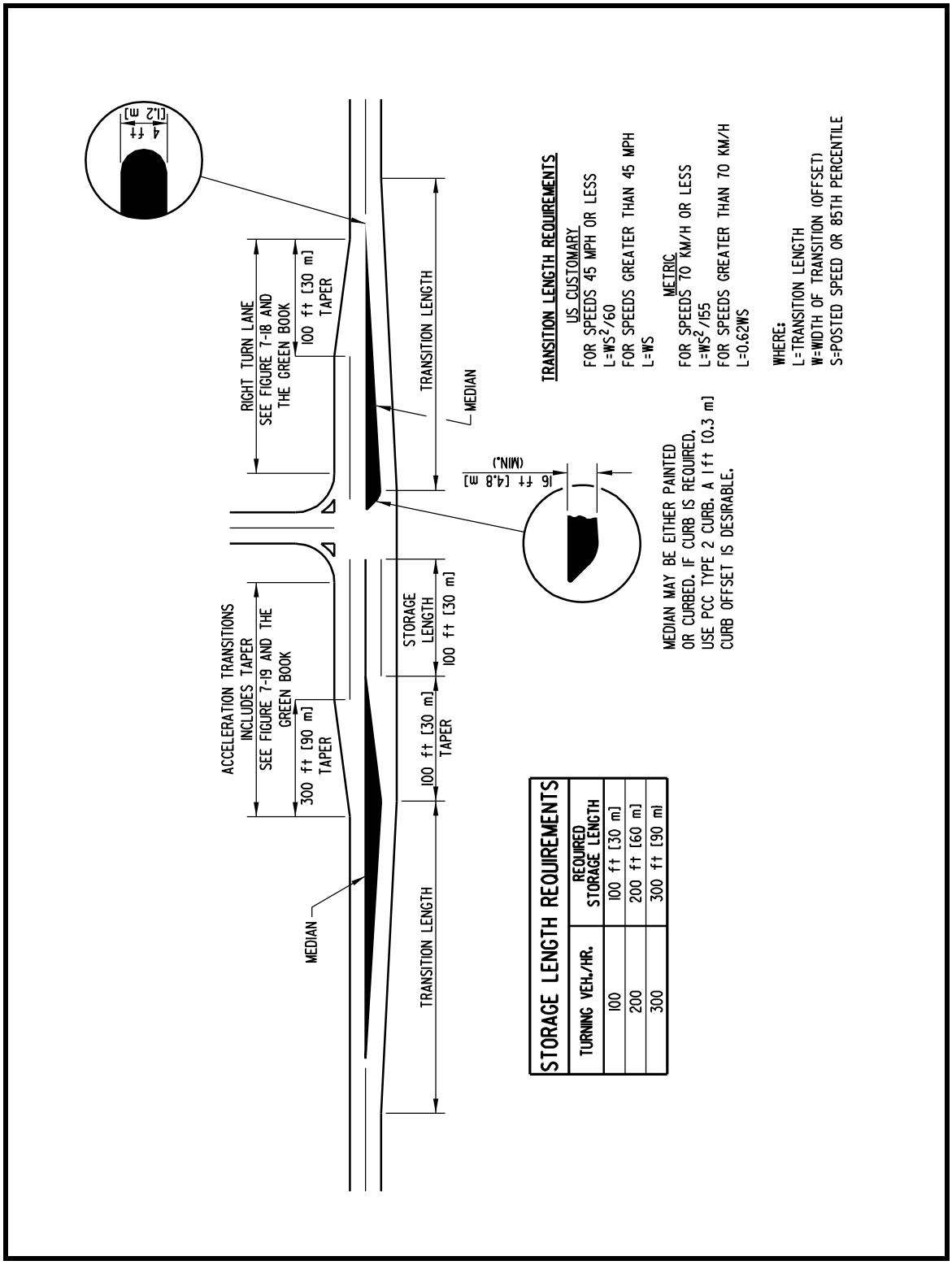

STORAGE LENGTH REQUIREMENTS

TURNING VEH./HR.	REQUIRED STORAGE LENGTH
100	100 ft [30 m]
200	200 ft [60 m]
300	300 ft [90 m]

Figure 7-14
Graphical Guide for Left-Turn Lane Need
40 mph {60 km/h] Operating Speed

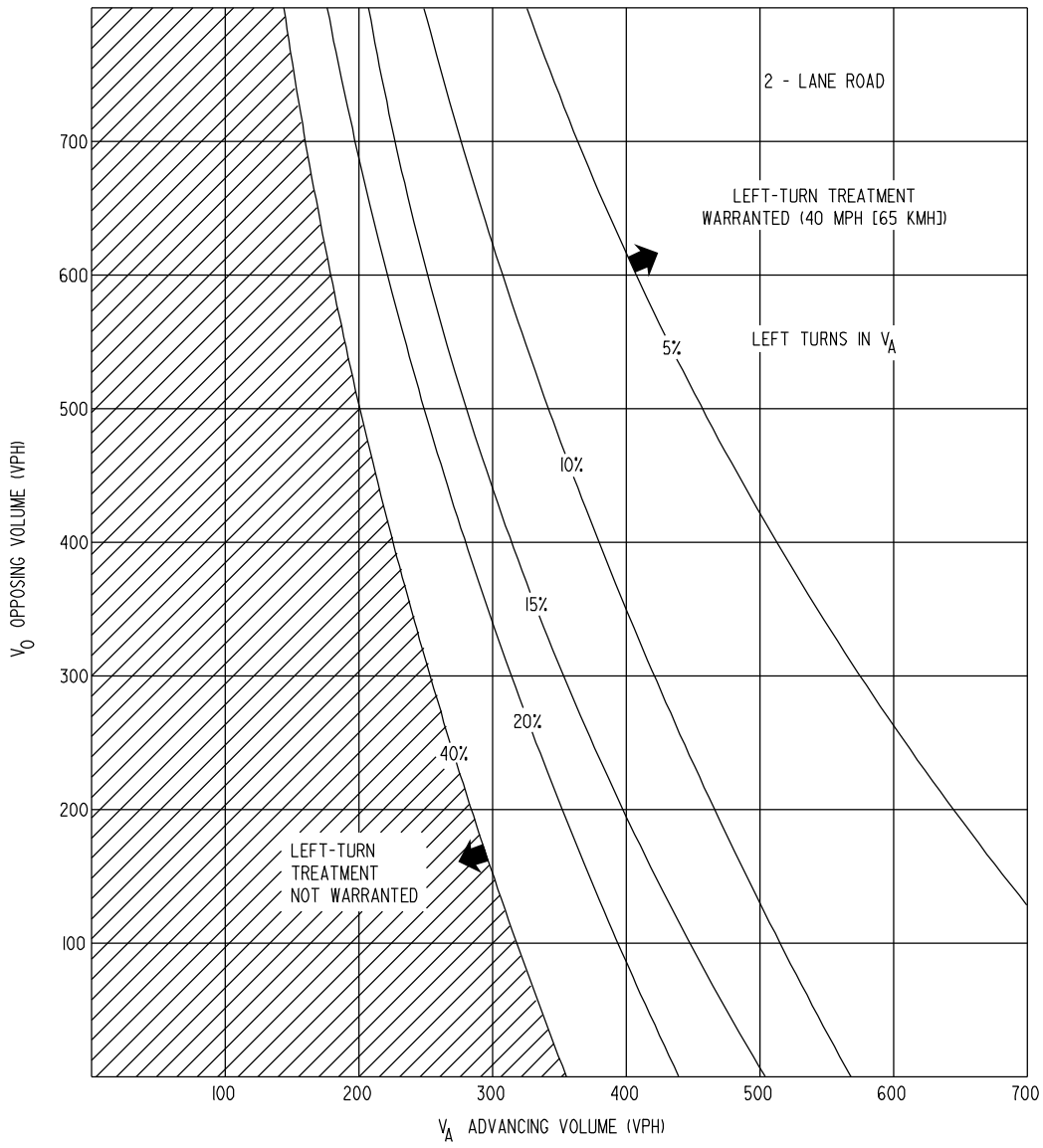

Figure 7-15
Graphical Guide for Left-Turn Lane Need
50 mph [80 km/h] Operating Speed

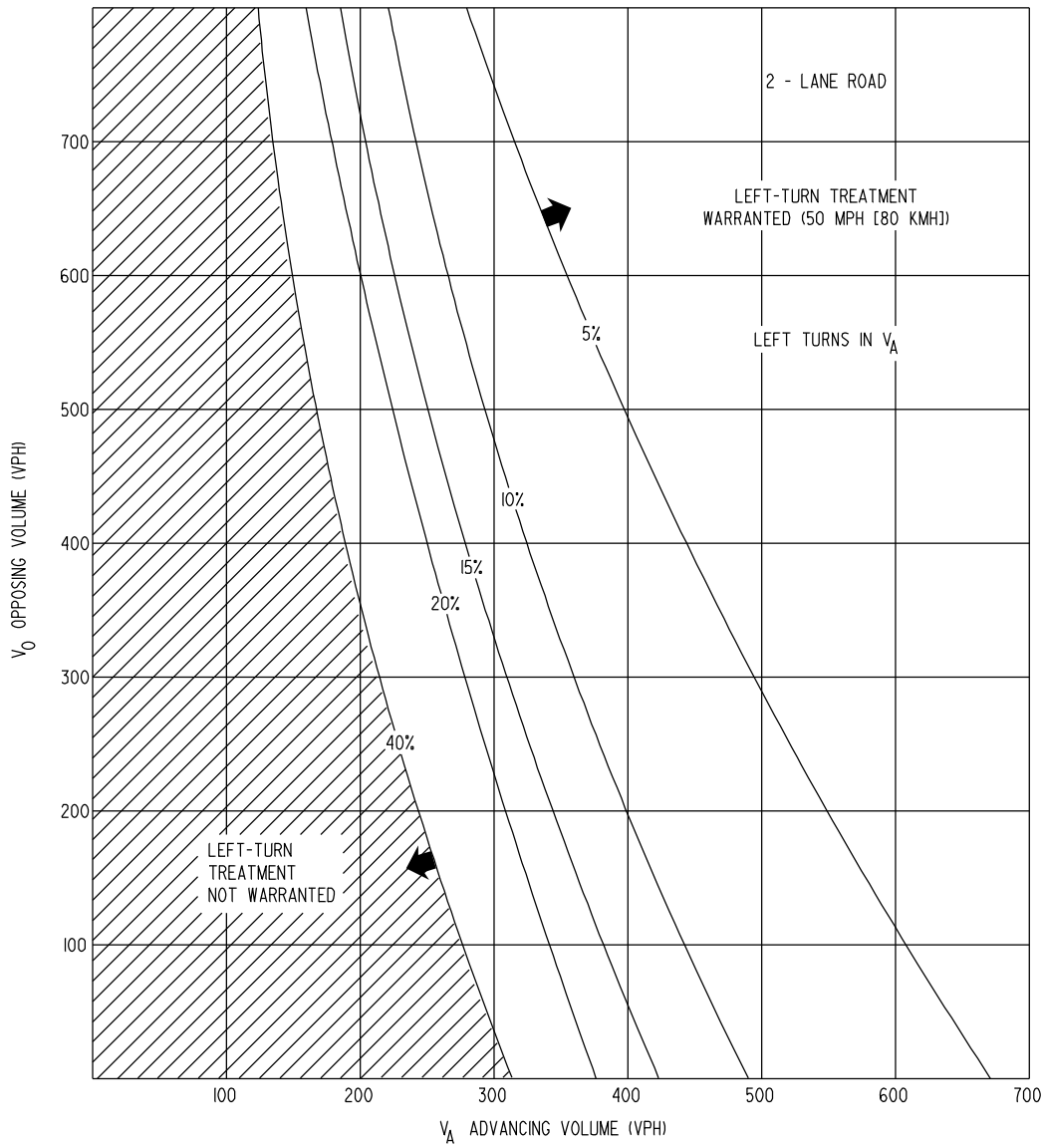

Figure 7-16
Graphical Guide for Left-Turn Lane for
60 mph [100 km/h] Operating Speed

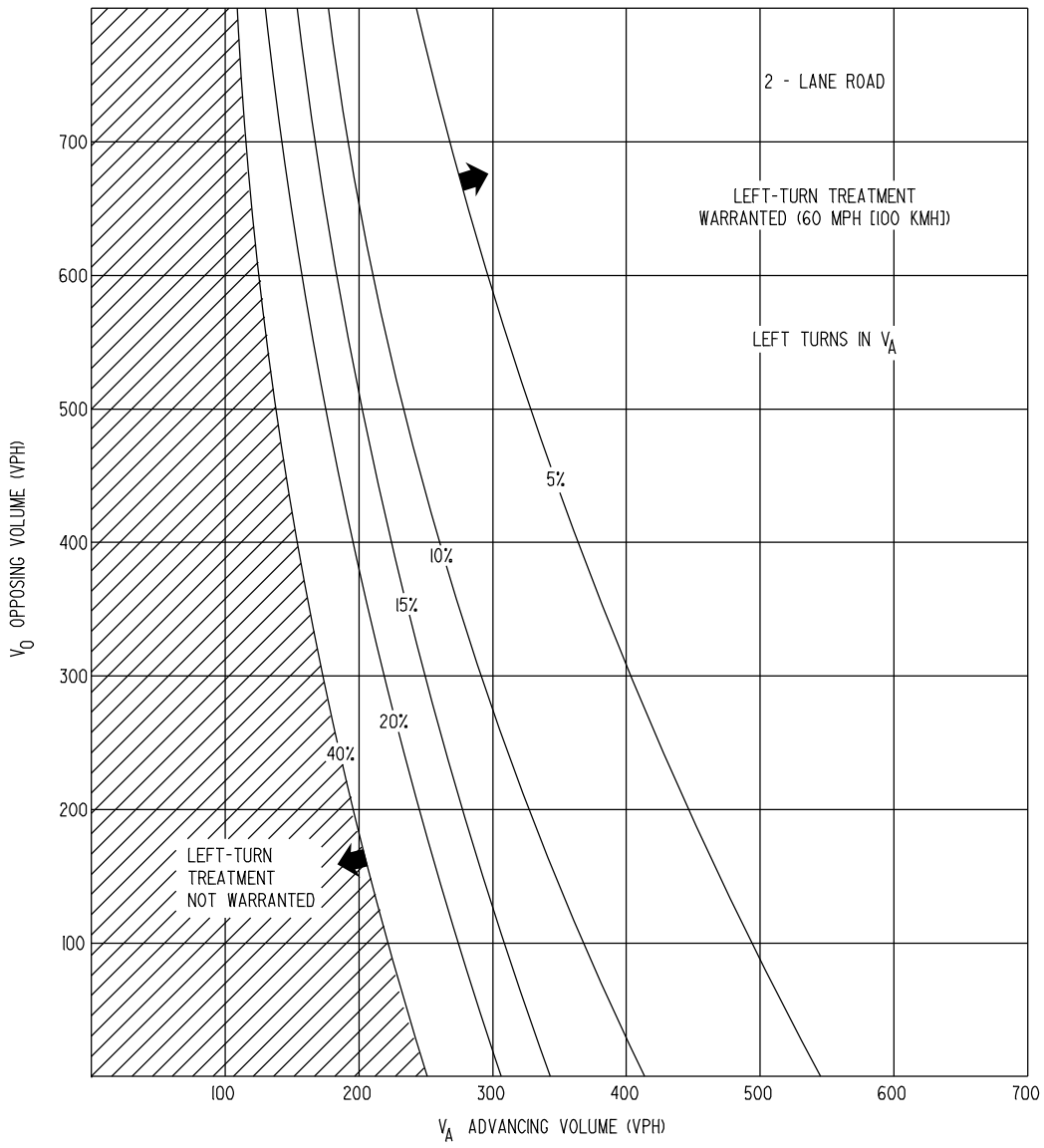

Figure 7-17
Suggested Minimum Lengths for Auxiliary Lane Design (Right And Left Turn Lane)
Four Lane Roadway–Open Roadway Conditions

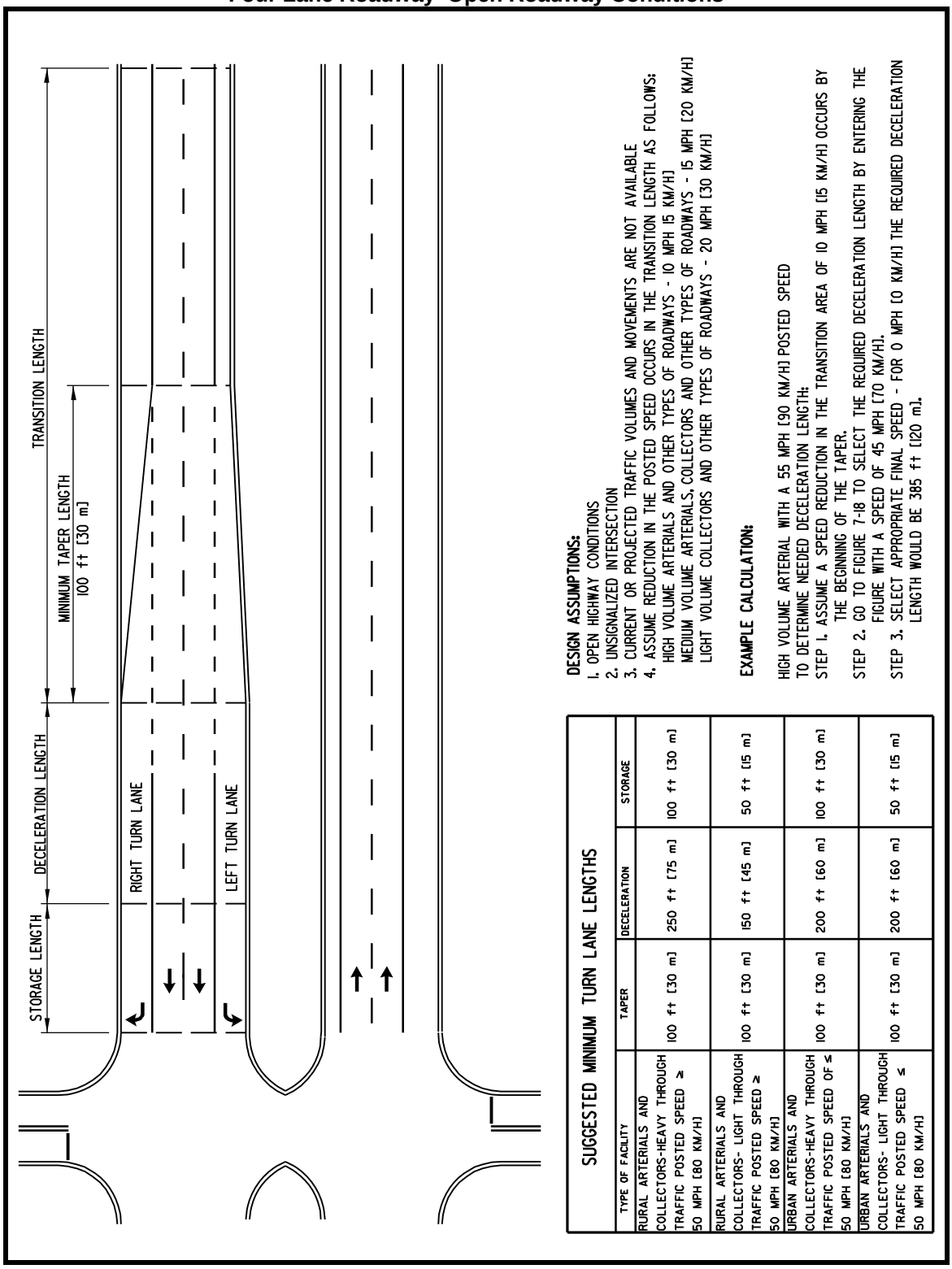

SUGGESTED MINIMUM TURN LANE LENGTHS

TYPE OF FACILITY	TAPER	DECELERATION	STORAGE
RURAL ARTERIALS AND COLLECTORS-HEAVY THROUGH TRAFFIC POSTED SPEED ≥ 50 MPH [80 KM/H]	100 ft [30 m]	250 ft [75 m]	100 ft [30 m]
RURAL ARTERIALS AND COLLECTORS- LIGHT THROUGH TRAFFIC POSTED SPEED ≥ 50 MPH [80 KM/H]	100 ft [30 m]	150 ft [45 m]	50 ft [15 m]
URBAN ARTERIALS AND COLLECTORS-HEAVY THROUGH TRAFFIC POSTED SPEED OF ≤ 50 MPH [80 KM/H]	100 ft [30 m]	200 ft [60 m]	100 ft [30 m]
URBAN ARTERIALS AND COLLECTORS- LIGHT THROUGH TRAFFIC POSTED SPEED ≤ 50 MPH [80 KM/H]	100 ft [30 m]	200 ft [60 m]	50 ft [15 m]

Figure 7-18
Minimum Deceleration Lengths (Without Taper) for Design of Exit Lanes
Urban Locations

US Customary			Metric		
Design Speed (mph)	Stop Condition	Yield Condition	Entering Speed [km/h]	Stop Condition	Yield Condition
	0 mph	15 mph		0 km/h	20 km/h
	Deceleration Length (ft)			Deceleration Length [m]	
30	235	200	50	75	70
35	280	250			
40	320	295	60	95	90
45	385	350	70	110	105
50	435	405	80	130	125
55	480	455	90	145	140
60	530	500	100	170	165
65	570	540	110	180	180
70	615	590	120	200	195

Figure 7-19
Minimum Acceleration Lengths (Without Taper) for Design of Entering Lanes
Urban Locations

US Customary			Metric		
Design Speed (mph))	Stop Condition	Yield Condition	Design Speed [km/h]	Stop Condition	Yield Condition
	0 mph	15 mph		0 km/h	20 km/h
	Acceleration Length (ft)			Acceleration Length [m]	
30	180	140	50	60	50
35	280	220			
40	360	300	60	95	80
45	560	490	70	150	130
50	720	660	80	200	180
55	960	900	90	260	245
60	1200	1140	100	345	325
65	1410	1350	110	430	410
70	1620	1560	120	545	530

Signalized intersections usually have higher volumes of traffic, more diversity in types of vehicles and a greater variety of traffic movements that have to be provided for in determining the median opening. The design will be based on more detailed traffic data and a capacity analysis.

The design of median openings is a matter of determining the traffic volumes to be accommodated and choosing the predominant design vehicle to use for the geometric and width controls for each crossing and turning movement. The proposed layout is then checked to see if larger vehicles can turn without undue encroachment on adjacent lanes. An intersection capacity analysis, using the HCM, may also be needed. If the traffic volume exceeds the capacity, the design may need to be expanded, possibly by widening or otherwise adjusting widths for certain movements. Traffic control devices such as yield signs, stop signs, traffic signals, islands or other channelization may be required to regulate the various movements effectively and to improve operational efficiency.

7.6.1 CONTROL RADII

An important factor in designing median openings is the path of the design vehicles that are anticipated to make this movement. The minimum left turn radius is that of the selected design vehicle making the turn at slow speed, 10 to 15 mph [15 to 25 km/h]. For locations that may have higher volumes, more frequent use by larger vehicles or higher turning speeds, the left-turn movement would operate more efficiently by selecting a radius of turn corresponding to a higher speed. However, the absolute minimum turning path for design and testing design layouts should be the P-vehicle. This design path does allow for an occasional single unit truck. The minimum design radius does assume the turning roadway has 12 ft [3.6 m] lanes with the vehicle located 2 ft [0.6 m] from the edge of travel way.

The paths of design vehicles making right turns are discussed in Section 7.2. Any differences between the minimum turning radii for left turns and those for right turns are small and considered insignificant in highway design.

The following control radii can be used for minimum practical design of median ends:

- A control radius of 40 ft (12 m) accommodates P vehicles suitably and occasional SU vehicles with some swinging wide;
- A control radius of 50 ft [15 m] accommodates SU vehicles and occasional WB-40 (WB-12) vehicles with some swinging wide; and
- A control radius of 75 ft [23 m] accommodates WB-40 [WB-12] and WB-50 [WB-15] vehicles with only minor swinging wide at the end of the turn.

7.6.2 SHAPES OF MEDIAN ENDS

The ends of medians at openings may be semicircular, bullet-nose or modified bullet-nose shapes. The shape normally depends on the effective median width at the end of the median. Criteria for selection of median shapes are given in Figure 7-20.

The two basic shapes are illustrated in Figure 7-21. The semicircular shape tends to create longer median openings and at crossroads leads vehicles into the opposing traffic lane. Therefore, its use is limited to medians less than 10 ft [3.0 m] in width. Even medians between 4 and 10 ft [1.2 and 3.0 m] will operate better, particularly where there is cross street traffic making left turns, if as a minimum the trailing edge of the median has a bullet nose configuration. The bullet nose design more closely follows the design vehicle's path and is formed by two symmetrical portions of the control radius and a small radius (about one-fifth of the median width) to round the nose. A narrow median that does not allow for development of the required radii will function better using a 1 ft [0.3] nose radius and then tapering the leading edge for 10 ft [3.0 m] and

the trailing edge for 20 ft [6.0 m].The bullet nose design can be designed to conform to the traffic movements permitted in the intersection. A wide median normally would have a portion of the nose flattened to be parallel to the median opening centerline and, depending upon the channelization design, a semicircular design may be more appropriate.

Figure 7-20
Preferred Median End Shapes
Based on Median Width

Controlling Median Width	Median End Shape
4 ft [1.2 m] or less	*Semicircular
4 to 66 ft [1.2 to 20 m]	Bullet Nose or Modified Bullet Nose
Over 66 ft [20 m]	Treated as separate intersection

*At locations with left turning cross road traffic, use a controlling radius of at least 40 ft [12 m].

7.6.3 LENGTHS OF MEDIAN OPENINGS

For any intersection on a divided highway, the length of the median opening should be as great as the width of the crossroad roadway pavement plus shoulders. The width and type of crossroad combined with the median width and selected control radius affect the median opening. The design should minimize any unsafe tracking encroachment into oncoming traffic from crossroads. AASHTO recommends that in no case should the opening be less than 40 ft [12 m] for a 90-degree intersection or less than the width of the crossroad pavement plus shoulders or plus 8 ft [2.4 m] for a crossroad without shoulders. Where the crossroad is a divided highway, the length of the opening should be at least equal to the width of the crossroad roadways, median and shoulders or 8 ft [2.4 m] if there are no shoulders.

Median openings are a function of median width and the selected control radius. Use of a 40 ft [12 m] minimum opening without regard to these two items should only be considered for minor, rural, unsignalized crossroads. Median openings of 50 to 64 ft [15 to 20 m] are more typical. The 40 ft [12 m] minimum length of opening does not apply to openings for U-turns where, depending upon the predominant vehicle, larger openings may be needed to ensure the vehicle can turn into the desired lane. As median widths become greater than 50 ft [15 m] the increased pavement area may create confusion as to proper vehicle paths and movements. These wider openings may need additional traffic control devices. ASSHTO recommends avoiding using median openings greater than 80 ft [25 m].

7.6.4 DESIRABLE MEDIAN OPENING DESIGNS FOR LEFT TURNS

Median openings that enable vehicles to turn on minimum paths, and at very low speeds, are adequate for intersections where traffic for the most part proceeds straight through the intersection. Where through-traffic volumes and speeds are high and left-turning movements are important, undue interference with through traffic should be avoided by providing median openings that permit turns without encroachment on adjacent lanes. This arrangement would enable turns to be made at speeds above those for the minimum vehicle paths and provide space for vehicle protection while turning or stopping.

For median openings having control radii greater than the minimum for the selected design vehicle, see the Green Book, pages 690 to 696. The three radii R, R1 and R2 control bullet-nose end designs. Figure 7-21 shows the layout. Radius R is the control radius for the sharpest portion of the turn. R_1 defines the turnoff curve at the median edge. R_2 is the radius of the tip.

When a sufficiently large R_1 is used, an acceptable turning speed for vehicles leaving the major road is assured, and a sizable area inside the inner edge of the through-traffic lane between points 1 and 2 on Figure 7-21 may be

available for speed change and protection from turning vehicles. Radius R_1 may vary from about 80 to 400 ft [25 to 120 m] or more.

The tabulated values shown in Figure 7-22 for R_1 (90, 170, and 230 ft [30, 50 and 70 m]) are established minimum radii for turning speeds under open highway conditions of 20, 25, and 30 mph [30, 40 and 50 km/h], respectively. In this case the ease of turning probably is more significant than the turning speeds, because the vehicle will need to slow to about 5 to 10 mph [15 to 25 km/h] at the sharp part of the turn or may need to stop at the crossroad. Radius R_2 can vary considerably, but is pleasing in proportion and appearance when it is about one-fifth of the median width. As illustrated in Figure 7-21, radius R is tangent to the crossroad centerline (or edge of crossroad median). Radii R and R_1 comprise the two-centered curve between the terminals of the left turn. For simplicity, the PC is established at point 2. Radius R cannot be smaller than the minimum control radius for the design vehicle, or these vehicles will be unable to turn to or from the intended lane even at low speed. To avoid a large opening, R should be held to a reasonable minimum of 50 ft [15 m].

The radii govern the length of median opening. For medians wider than about 30 ft [9 m] coupled with a crossroad of four or more lanes, the control radius R generally will need to be greater than 50 ft [15 m] or the median opening will be too short. A rounded value can be chosen for the length of opening, e.g., 50 or 60 ft [15 or 18 m], and that dimension can be used to locate the center for R. Then R becomes a check dimension to ensure the workability of the layout. The tabulation of values in Figure 7-22 shows the resultant lengths of median openings over a range of median widths, for three assumed values of R_1 and for an assumed control radius R of 50 ft [15 m]. This control radius allows for an SU design vehicle to turn without swerving into an adjacent traffic lane. Dimension B is included as a general design control and represents the distance from the P.C. of R_1 to the centerline of the median opening.

7.6.5 MEDIAN WIDTHS FOR LEFT-TURN LANES

For safety and/or capacity on divided roadways, median left-turn lanes are provided at intersections with primary, secondary and tertiary roadways on the state maintenance system, U-turn locations and, if determined necessary, major commercial and residential entrances.

The need for median openings is based upon operating speeds, traffic volumes, left-turn demand, percent of trucks, desired capacity, type of facility, density of roadside development, and the frequency of intersections. Under most conditions allowing turns from a through lane should be avoided. In fact, there is an expectation on the user's part that, except in the most congested traffic and densely developed areas, median openings will have a separate turn lane. Median turn-lane design is a function of median width, turning lane width, assumed operating speeds, intersecting roadway angles, types of traffic control devices, predominant vehicle types and the desired vehicle movements.

The available median width becomes an important element in the design. Median widths of 20 ft [6.0 m] or more are desirable at intersections with single median turning lanes, but widths of 16 to 18 ft [4.8 to 5.4 m] permit reasonably adequate arrangements in urban areas where right-of-way and operating speeds are low. Where two median turning lanes are used, a median width of at least 28 ft [8.4 m] permits the installation of two 12 ft [3.6 m] lanes and a 4 ft [1.2 m] separator. In urban areas where speeds are low and the intersection is controlled by traffic signals, a 10 ft [3.0 m] lane with a 2 ft [0.6 m] curbed separator or paint lines, or both, may be acceptable to separate the median lane from the opposing through lane. Where pedestrian use is anticipated, a 6 ft [1.8 m] separator should be provided. Left-turn and median designs have to

work together to provide an effective operation. In order to ensure this, it is necessary that the types of vehicles, the number of vehicles and their desired movements be identified.

7.6.6 MEDIAN OPENINGS FOR U-TURNS

Median openings designed to accommodate U-turn vehicles (crossovers) are provided on divided highways at intervals that serve adjacent properties without greatly inconveniencing property owners and other users. Section 7.8.3 presents general guidelines for locating crossovers. In some cases, intermediate U-turns may be included in a traffic operations plan by reducing the need for this movement at a nearby major intersection. Preferably, a vehicle should be able to begin and end the U-turn on the inner lanes next to the median but the required median widths are larger than practicable on most highways. Median widths of at least 16 ft [5 m] for passenger and 50 ft [15 m] single-unit trucks are required to turn from an inner travel lane to the outer travel lane of a two-lane opposing roadway. This does not include the width of the left-turn lane, preferably 12 ft [3.6 m]. A median width of at least 25 ft [8 m] is required to safely store a passenger car without impeding through traffic. This width will not adequately protect any other design vehicle.

The school bus is the preferred median turning design vehicle for rural divided highways. The minimum width to accommodate a school bus is 50 ft [15 m]—40 ft [12 m] length plus a clearance to each through traffic lane of 5 ft [1.5 m]. For isolated locations where there are frequent U-turns by semi-trailers it may be necessary to add a shoulder turn area or widen the existing or proposed shoulder to facilitate this movement. Figure 7-23 shows the preferred treatment for U-turns.

7.7 TRAFFIC CONTROL DEVICES

Chapter Eight and the MUTCD more fully discuss traffic control devices and their application to intersection design. Traffic control devices, such as signs, markings, signals and islands, are essential to effective traffic operations at intersections. The extent of such traffic control may range from a stop sign at a simple road approach to a complex system of synchronized traffic signals on a high-volume urban arterial. Consideration should be given to the need for traffic control devices during the geometric design of intersections–particularly those that carry considerable traffic volume with many turning movements The needed types of traffic control devices may influence the shapes of turning roadways and traffic islands. The designer needs to consider effective placement of signs and signals and the posts that support them, as well as the locations of crosswalks, where pedestrians are involved.

7.7.1 TRAFFIC SIGNALS

The determination of need, whether or not warrants are met, and design of traffic signals is the responsibility of the Traffic section in coordination with the designer. The MUTCD provides guidelines for analyzing the warrants for traffic signal installations, as well as criteria for the detailed design.

7.7.2 PAVEMENT MARKING AND SIGNING

Successful traffic operation depends largely on proper pavement marking. The designer works with Traffic in developing a project's signing and stripping plan.

All pavement marking and permanent traffic signs should be in accordance with criteria in the MUTCD and DelDOT's manuals. Chapter Eight describes this subject in more detail.

Figure 7-21
Median Nose Design Alternatives

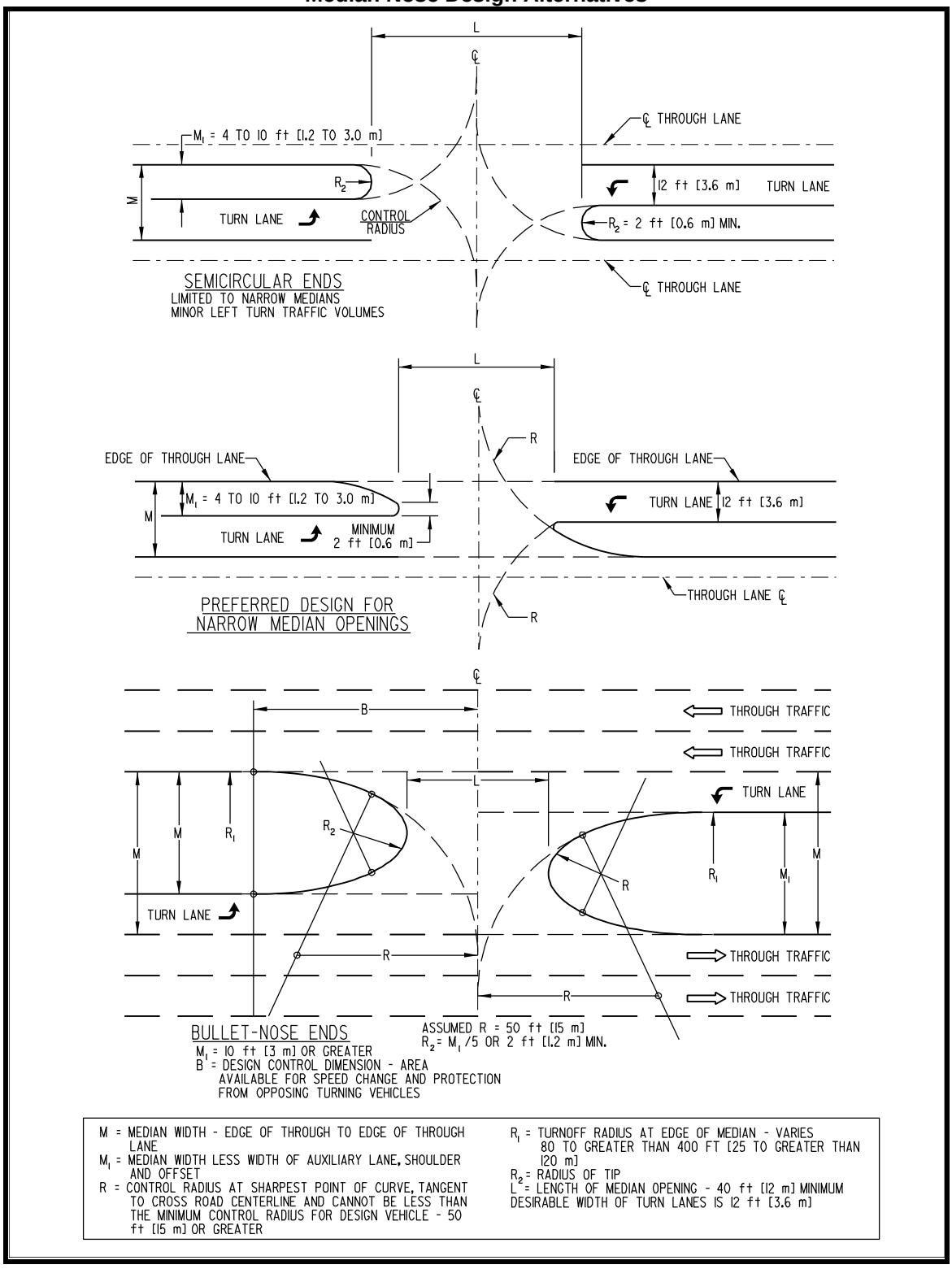

Figure 7-22
Desired Design Dimensions for Median Openings Using Bullet-nose Ends

US Customary						
M median width (ft)	**Dimensions in feet when R_1 =**					
	90 ft		**170 ft**		**230 ft**	
	L	**B**	**L**	**B**	**L**	**B**
20	58	65	66	78	71	90
30	48	68	57	85	63	101
40	40	71	50	90	57	109
50			44	95	51	115
60					46	122
70					41	128

Metric						
M median width [m]	**Dimensions in meters when R_1 =**					
	30 m		**50 m**		**70 m**	
	L	**B**	**L**	**B**	**L**	**B**
6.0	18.0	20.2	20.2	24.4	21.3	27.6
9.0	15.1	21.4	17.7	26.5	19.0	30.4
12.0	12.8	22.4	15.6	28.3	17.1	32.7
15.0			13.8	29.9	15.4	34.7
18.0					13.8	36.7
21.0					12.4	38.4

7.8 ACCESS CONTROL GUIDELINES

Driveways and entrances are the simplest types of intersections. However, dealing with access to the highway and control of access can be one of the most difficult tasks of the designer. It is particularly difficult on projects involving roadways constructed prior to today‘s more stringent land-use and access regulations.

7.8.1 STANDARDS

DelDOT’s Entrance Manual provides the designer with criteria for locating and designing driveways and entrances. The designer should be thoroughly familiar with these standards and make every effort to conform with them in the project design to the extent that is reasonable.

The design of projects on new alignment should adhere strictly to DelDOT’s entrance standards. If that is not possible for any reason, there should be documentation for the variance and approval obtained to deviate.

The standards must be used with caution and judgment on reconstruction and other type projects. Existing entrances affected by highway construction must be designed using engineering judgment to obtain as safe an access facility as possible given the restrictions peculiar to the site. In the absence of a demonstrated need, changes in access control that are costly and affect the property owner significantly are to be avoided.

Considering the needs, existing access provisions and the standards, the designer should strive for uniformity in the access provided to all property owners within the project. Property owners are extremely sensitive to lack of uniform treatment. When conditions make it impossible to do this, the property owner should be informed of the reasons for the lack of uniform treatment.

Safety is a primary consideration. The accident history should be checked to determine if there are an excessive number of accidents or unusual situations associated with entrances to the highway or at crossovers on divided highways. Special attention should be given to modifying those entrances with features or characteristics that have been identified as a possible factor in causing accidents.

The development of standards for retrofitting access control is extremely difficult because of the variability among sites. Rather than adopt a set of standards, some general objectives and guides are provided which should be considered when control of access is being addressed in the design process.

7.8.2 GUIDELINES–ENTRANCES

In retrofitting an existing point of access, the following criteria should be applied wherever possible.

- The point of access must be positively controlled by the use of curbs, islands or landscaped areas. Islands and landscaped areas must be constructed so as to restrict vehicular movement and force it to the defined point of access.

- No more than two points of access should be provided for each property.

- The number of movements permitted per point of access must be consistent with desirable traffic operations. The point or points of access should be located as far from any nearby intersection as possible.

- Entrance widths shall be sufficiently wide to accommodate turning movements necessary to obtain access to the site. The type of traffic expected to use the entrance must be considered. Where islands are constructed as part of a project, they should be set back from the roadway edge at least a distance equal to the shoulder width.

- An important consideration in entrance design is ensuring that internal parking arrangements do not interfere with the required sight distance. A developer's tendency is to provide as much parking as physically possible. Properly designed islands and other channelization can assure that adequate sight distance is provided.

In general, use of the right-of-way by private interests is to be avoided. Such use is frequently encountered, however, particularly on roads constructed many years ago. The public's interest should never be compromised. However, when a means of access control can be accomplished that meets the objectives of providing safe access to state controlled roads, consideration will be given to permitting present operations to continue. In such instances, an agreement should be made between the Department and the property owner establishing appropriate conditions, etc.

7.8.3 GUIDELINES–CROSSOVERS

Crossovers on divided highways that do not have control of access serve several important functions:

- They allow for U-turn movements to serve adjacent land uses.

- They allow local road or street traffic to enter or cross the major roadway.

- They can reduce turning volumes at major intersections by providing for turns away from the major intersection.

- They provide access for emergency and maintenance vehicles.

Crossovers are also points of vehicle conflict and potential accident locations. Therefore, the placement and location of crossovers require careful consideration to maximize their

benefits while minimizing their accident potential.

In general, crossovers should be located where sufficient sight distance is available. They should not be located on curves that require superelevation. Median side slopes adjacent to crossovers should be properly graded to reduce their potential as an obstacle to out-of-control vehicles and to provide proper drainage. In urban and other developed areas, the spacing of crossovers should not be reduced to the point where adequate lengths of left-turn lanes cannot be constructed and adequate signalization and coordination cannot be achieved. For new construction projects without control of access, crossovers should be located approximately 1000 to 1500 ft [300 to 1500 m] apart in urban areas and 2000 to 3000 ft [600 to 900 m] apart in rural areas.

On reconstruction and other lower type projects, the accident history at existing crossovers should be researched and any geometric deficiencies should be identified. Changes in crossover geometrics or channelization should be considered to address these problems. Crossovers should be removed only after careful consideration of how traffic patterns will be affected. In some instances, the problem that the designer is trying to correct by removing a crossover could show up at another crossover location because of the new traffic patterns. The removal or relocation of crossovers is potentially controversial and can be an important part of the public information program.

7.8.4 PUBLIC AWARENESS

Throughout the design process, it is very important to keep the public informed about the project, with special reference to proposed access changes. Contact with the public may be made through individual contacts, plans-available meetings or public meetings. See the Project Development Manual for details.

Figure 7-23
Typical Crossover Design for
U-turns and Minor Intersections on Rural Divided Roadways

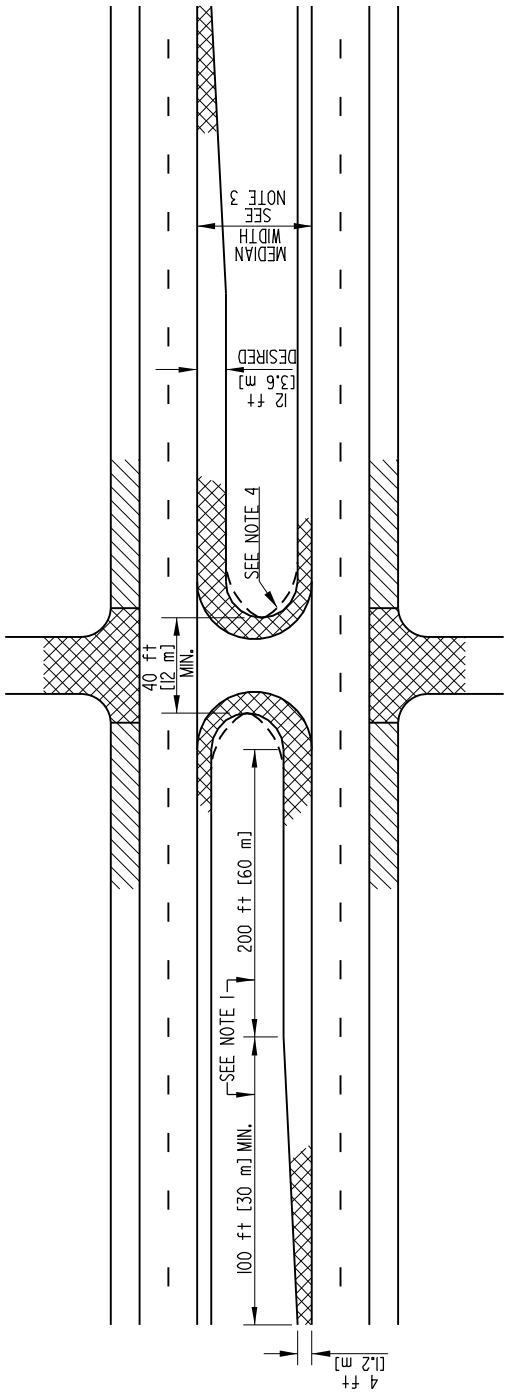

NOTES:

1. CONSISTS OF A 100 ft [30 m] TAPER, 150 ft [45 m] DECELERATION LANE AND A 50 ft [15 m] STORAGE LANE. THESE ARE THE MINIMUM RECOMMENDED LENGTHS FOR EACH. IF THERE ARE OTHER CONDITIONS THAT EXIST SUCH AS HIGH TRUCK USAGE, HIGH TRAFFIC VOLUMES OR HIGH POSTED SPEEDS, THE LENGTHS MAY HAVE TO BE INCREASED BASED ON THE DISCUSSION IN SECTION 7.5 ON AUXILIARY LANES, THE GREEN BOOK AND FIGURE 7-17.
2. U-TURNS BY SCHOOL BUSES AND SEMI-TRAILERS CANNOT BE ACCOMPLISHED WITH A MEDIAN LESS THAN 50 ft [15 m]. THE DESIGN WILL HAVE TO INCLUDE SOME SHOULDER IMPROVEMENTS TO ALLOW FOR THIS MOVEMENT.
3. THE MINIMUM MEDIAN WIDTH TO SAFELY STORE A P-DESIGN VEHICLE IS 25 ft [7.5 m] AND A SU-DESIGN VEHICLE IS 50 ft [15 m].
4. FOR INTERSECTIONS WITH MINOR ROADS, CROSS STREETS, AND MAJOR ENTRANCES, THE MEDIAN NOSE SHOULD BE DESIGNED AS A BULLET NOSE WITH A SELECTED DESIGN VEHICLE RADIUS.