SCALE : N.T.S.

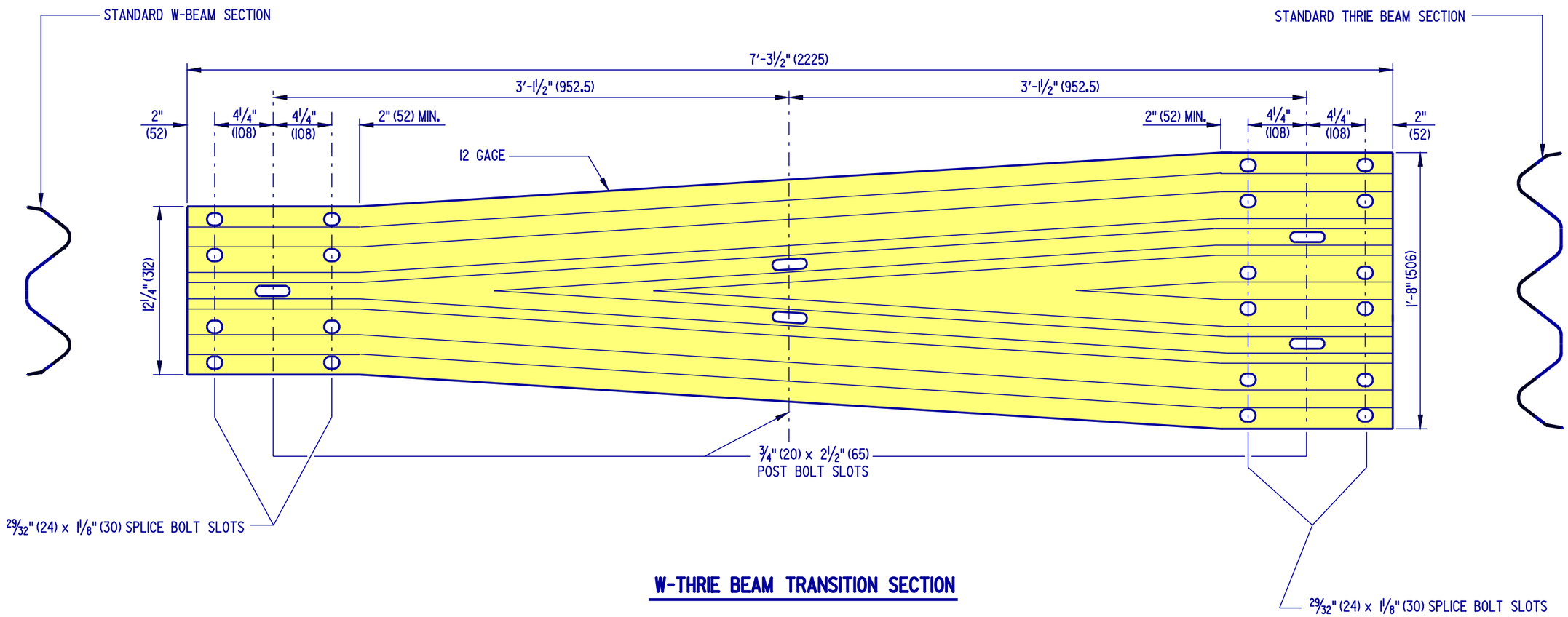

W-THRIE BEAM TRANSITION SECTION

DELAWARE DEPARTMENT OF TRANSPORTATION	HARDWARE		APPROVED Carolann Wicks (CHIEF ENGINEER) 1/10/05 (DATE)
	STANDARD NO. B-13 (2004)	SHT. 6 OF 13	RECOMMENDED (DESIGN ENGINEER) 1/3/05 (DATE)

09/10/2004

SCALE : N.T.S.

NOTES : 1). ALL HOLES SHALL BE DRILLED PRIOR TO GALVANIZING.

2). ALL WOOD SIZES ARE NOMINAL DIMENSIONS.

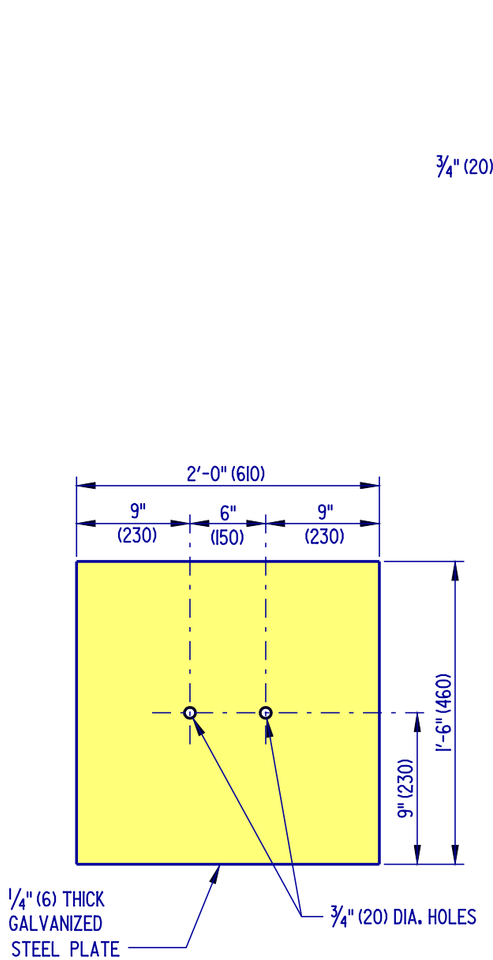

SOIL PLATE

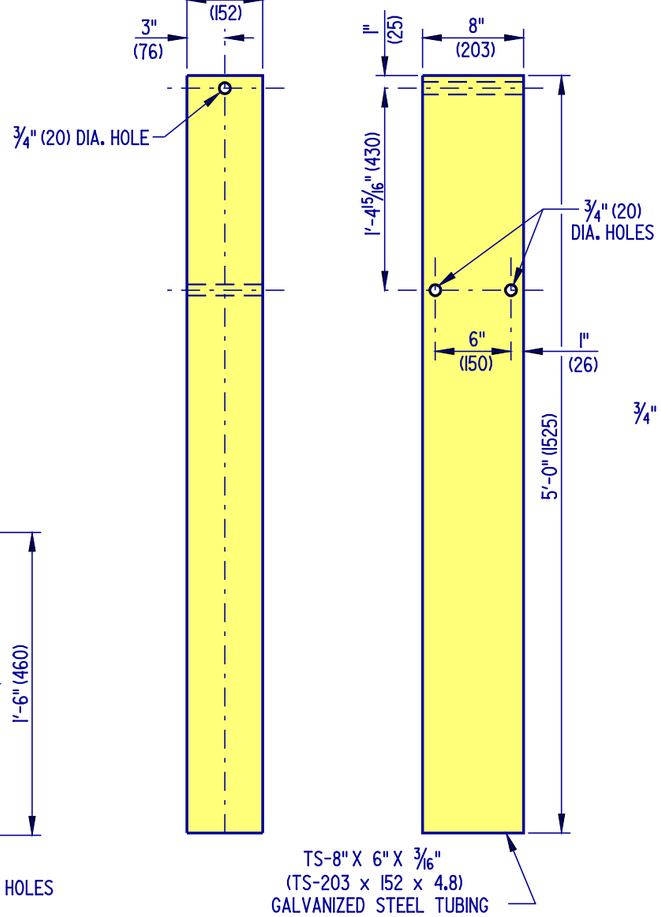

STEEL TUBE

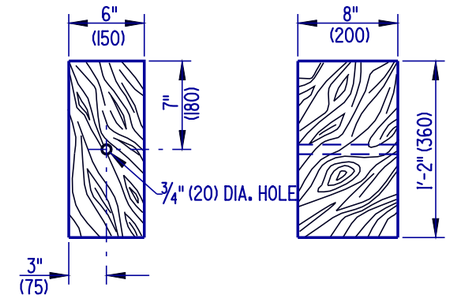

WOOD BLOCK

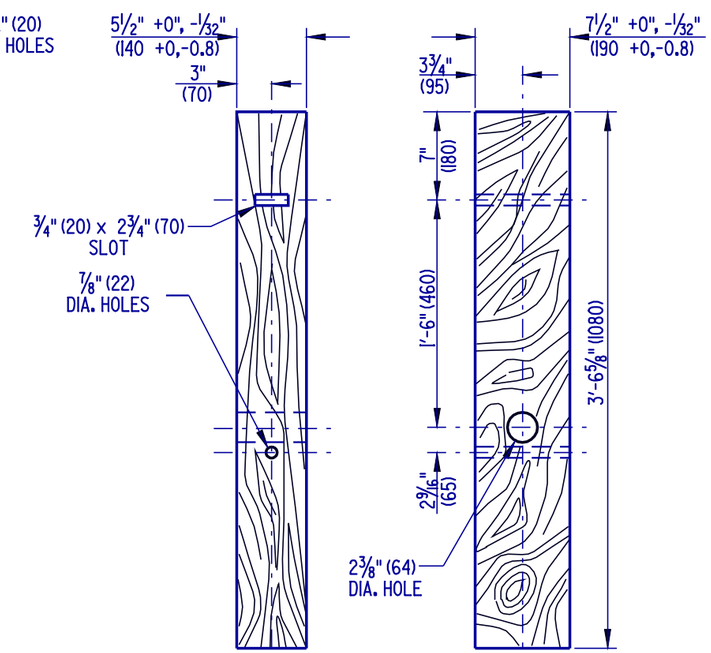

SHORT WOOD BREAKAWAY POST

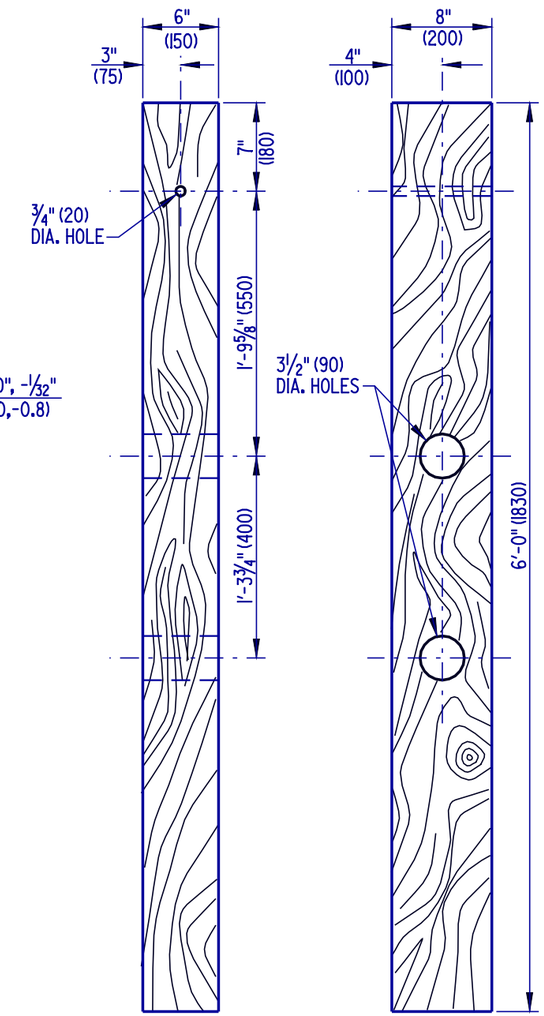

LONG WOOD BREAKAWAY POST

DELAWARE DEPARTMENT OF TRANSPORTATION	HARDWARE		APPROVED Carolann Wicks CHIEF ENGINEER 1/10/05 DATE
	STANDARD NO. B-13 (2004)	SHT. 7 OF 13	RECOMMENDED Dennis M. Office DESIGN ENGINEER 1/3/05 DATE

09/21/2004

SCALE : N.T.S.

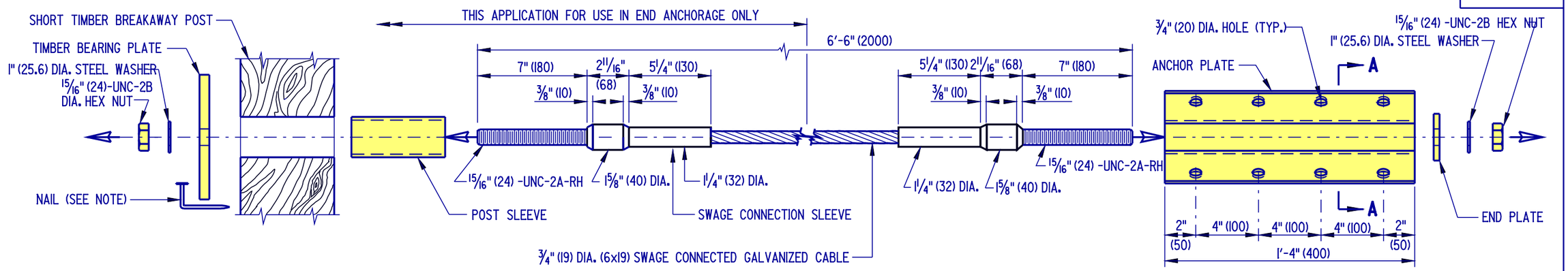

SWAGED CABLE ASSEMBLAGE AND RELATED HARDWARE ASSEMBLY

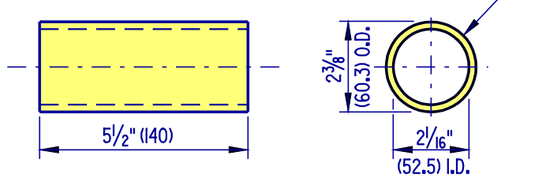

POST SLEEVE

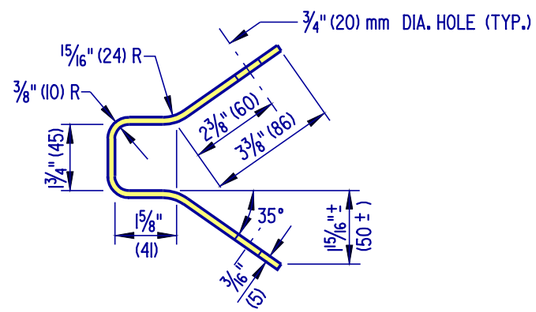

SECTION A-A

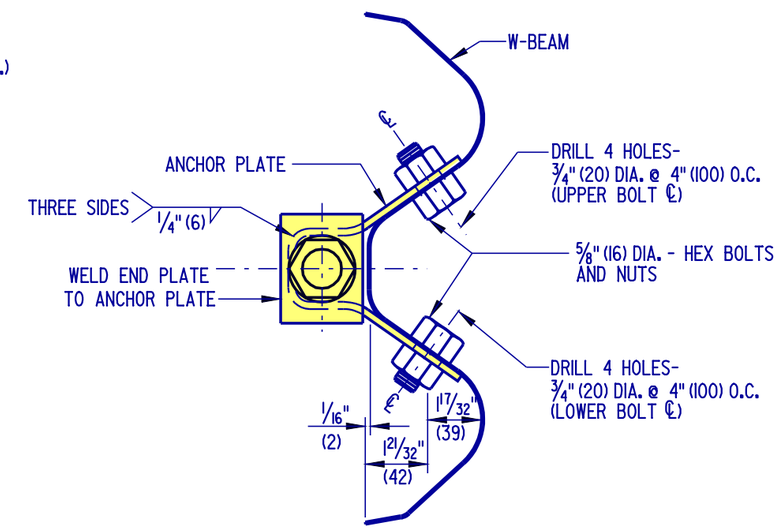

ANCHOR PLATE TO W-BEAM CONNECTION DETAIL

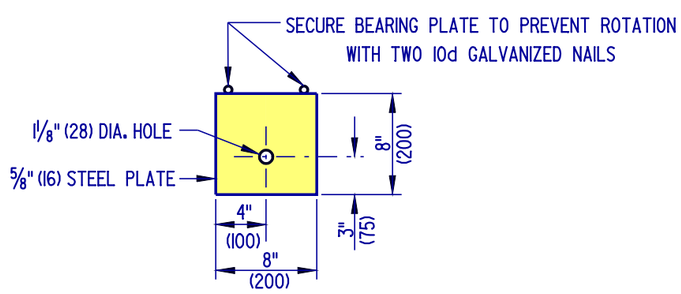

TIMBER BEARING PLATE

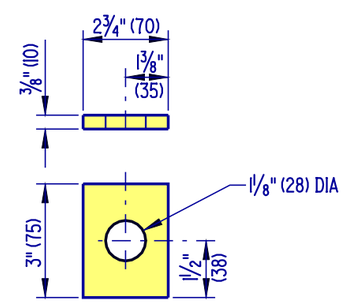

END PLATE

NOTES: 1). TO ENSURE THAT THE TIMBER BEARING PLATE REMAINS IN POSITION, 2 - 10d GALVANIZED STEEL NAILS SHALL BE DRIVEN IN THE SHORT TIMBER BREAKAWAY POST, AND BENT OVER BEARING PLATE.

2). TIGHTEN ASSEMBLY UNTIL CABLE IS TAUGHT.

3). ALL HOLES SHALL BE DRILLED PRIOR TO GALVANIZING.

DELAWARE DEPARTMENT OF TRANSPORTATION	HARDWARE		APPROVED Carolann Wicks (CHIEF ENGINEER) 1/10/05 (DATE)
	STANDARD NO. B-13 (2004)	SHT. 8 OF 13	RECOMMENDED (DESIGN ENGINEER) 1/3/05 (DATE)

09/21/2004

SCALE : N.T.S.

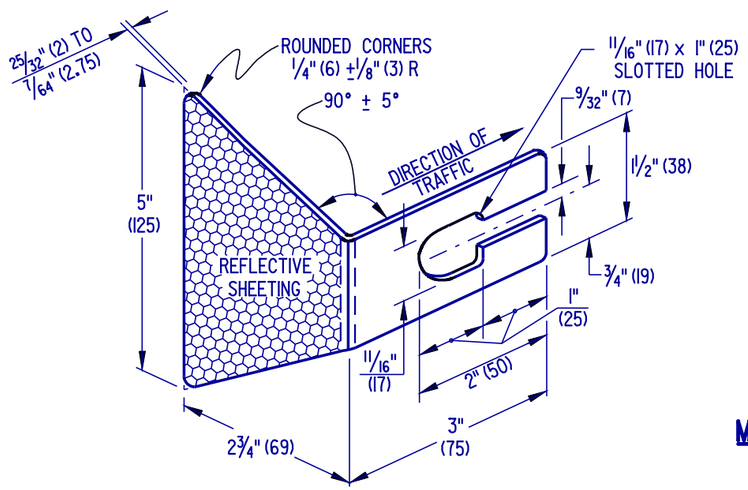

GUARDRAIL REFLECTOR

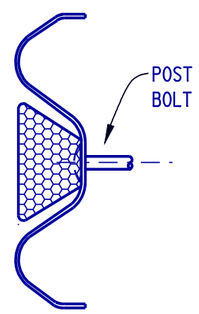

MOUNTING POSITION

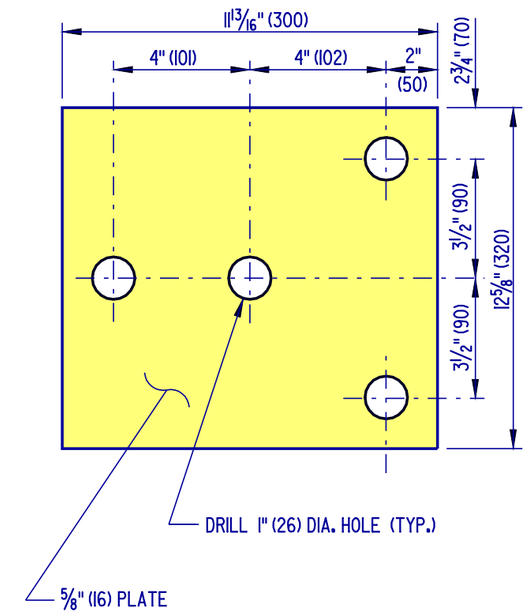

BEARING PLATE DETAIL (11)

DELAWARE DEPARTMENT OF TRANSPORTATION	HARDWARE		APPROVED Carolann Wicks CHIEF ENGINEER 1/10/05 DATE
	STANDARD NO. B-13 (2004)	SHT. 9 OF 13	RECOMMENDED Dennis M. Office DESIGN ENGINEER 1/3/05 DATE

12/08/2004

SCALE : N.T.S.

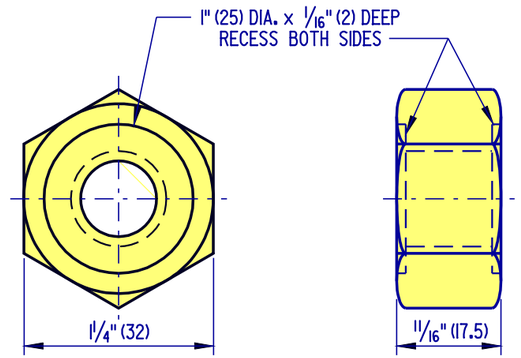

RECESSED NUT
(FOR 5/8" (16) GUARDRAIL BOLT)

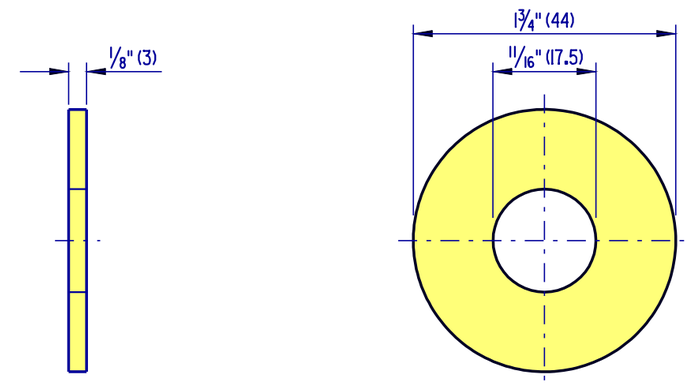

STEEL WASHER (FOR 5/8" (16) GUARDRAIL BOLT)

NOTE: DIMENSION FOR WASHER THICKNESS IS APPROXIMATE BASED ON METAL THICKNESS.

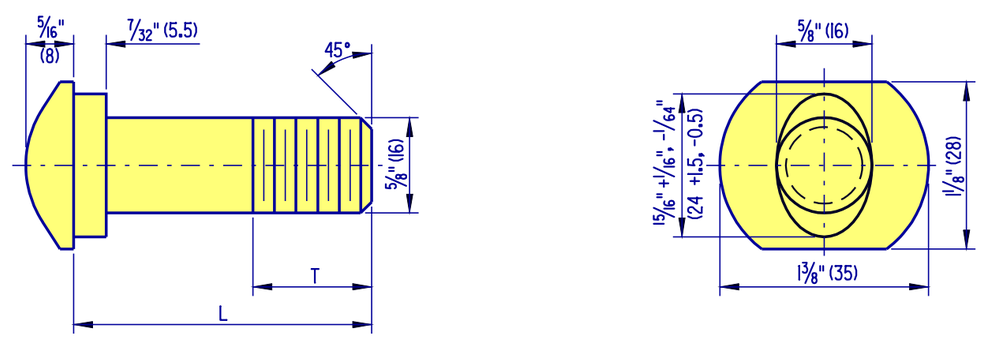

GUARDRAIL BOLT

L	T (MIN.)
1 1/4" (35)	FULL THREAD LENGTH
2" (50)	FULL THREAD LENGTH
4" (100)	FULL THREAD LENGTH
10" (255)	4" (100) THREAD LENGTH
18" (460)	4" (100) THREAD LENGTH

NOTES :
1. ALL FILLETS SHALL HAVE A MINIMUM RADIUS OF 1/16" (2).
2. IF THE BOLT EXTENDS MORE THAN 1/2" (12) BEYOND THE NUT, THE BOLT SHALL BE TRIMMED BACK AS PER THE DEPARTMENT'S SPECIFICATIONS.

DELAWARE DEPARTMENT OF TRANSPORTATION	HARDWARE		APPROVED Carolann Wicks CHIEF ENGINEER 1/10/05 DATE
	STANDARD NO. B-13 (2004)	SHT. 10 OF 13	RECOMMENDED Dennis M. Office DESIGN ENGINEER 1/3/05 DATE

09/23/2004

SCALE : N.T.S.

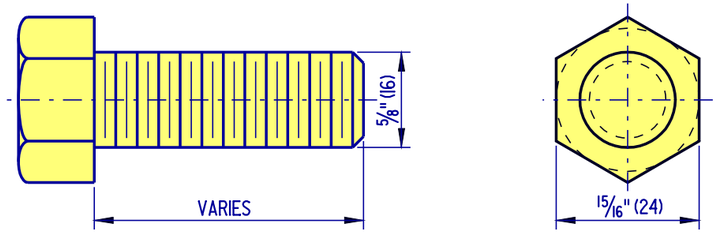

5/8" (16) HEX BOLT

5/8" (16) HEX NUT

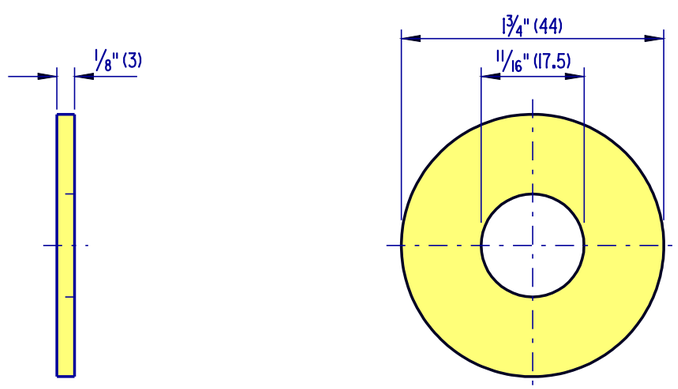

5/8" (16) STEEL WASHER

NOTE : DIMENSION FOR WASHER THICKNESS IS APPROXIMATE BASE METAL THICKNESS.

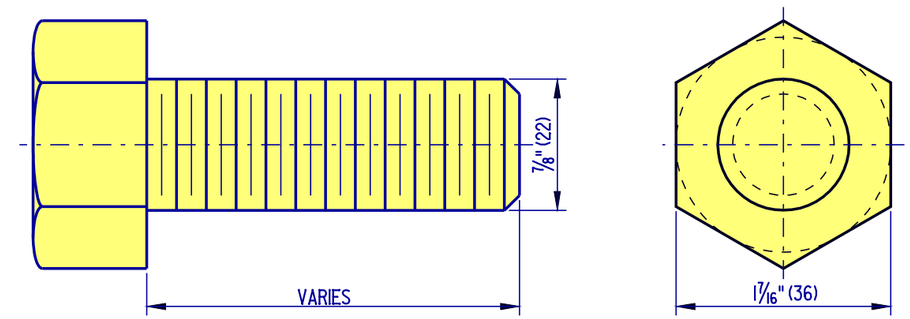

HIGH-STRENGTH STRUCTURAL HEX BOLT

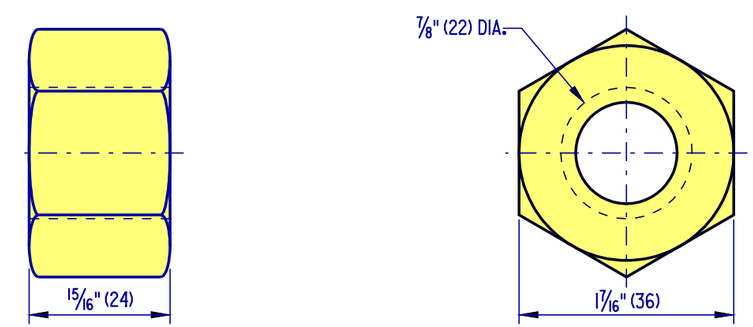

HIGH-STRENGTH STRUCTURAL HEX NUT

DELAWARE DEPARTMENT OF TRANSPORTATION	HARDWARE		APPROVED Carolann Wicks (CHIEF ENGINEER) 1/10/05 (DATE)
	STANDARD NO. B-13 (2004)	SHT. 11 OF 13	RECOMMENDED Dennis M. Office (DESIGN ENGINEER) 1/3/05 (DATE)

09/21/2004

SCALE : N.T.S.

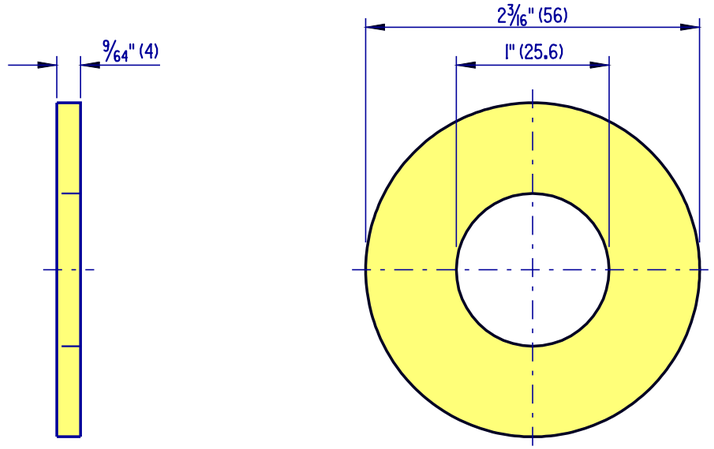

STEEL WASHER

NOTES : 1. FOR USE WITH SWAGED CABLE ASSEMBLAGE.
2. DIMENSION FOR WASHER THICKNESS IS APPROXIMATE BASE METAL THICKNESS.

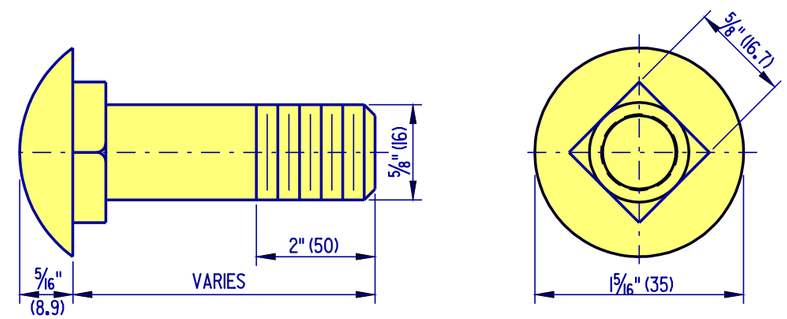

5/8" (16) CARRIAGE BOLT

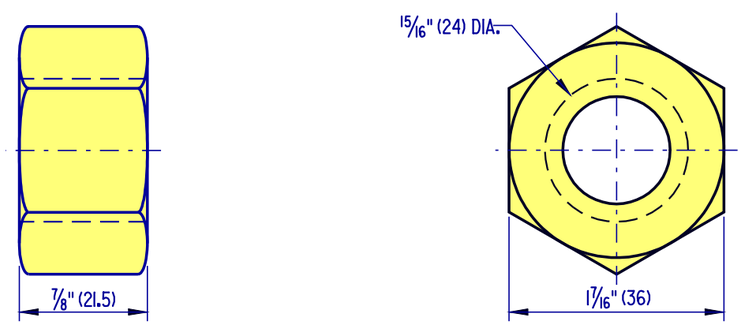

1 5/16" (24) HEX NUT

NOTE : FOR USE WITH SWAGED CABLE ASSEMBLAGE.

DELAWARE DEPARTMENT OF TRANSPORTATION	HARDWARE			APPROVED Carolann Wicks CHIEF ENGINEER 1/10/05 DATE
	STANDARD NO. B-13 (2004)	SHT. 12 OF 13		RECOMMENDED Dennis M. Office DESIGN ENGINEER 1/3/05 DATE

09/10/2004

SCALE : N.T.S.

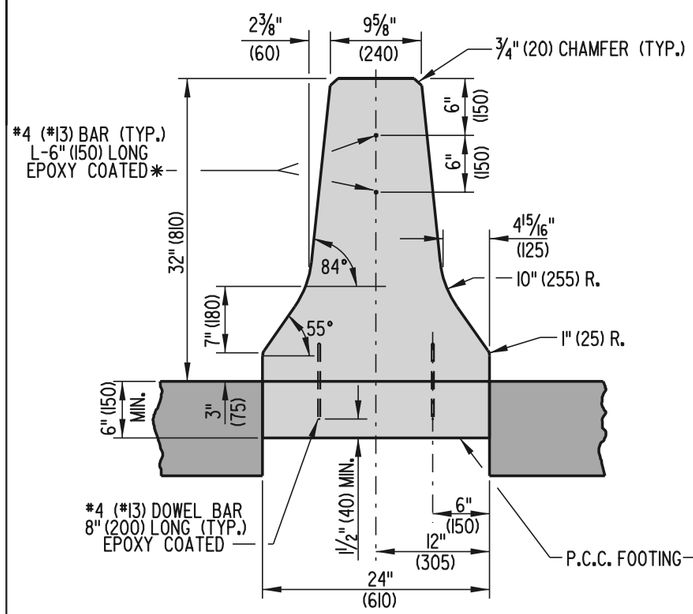

SECTION

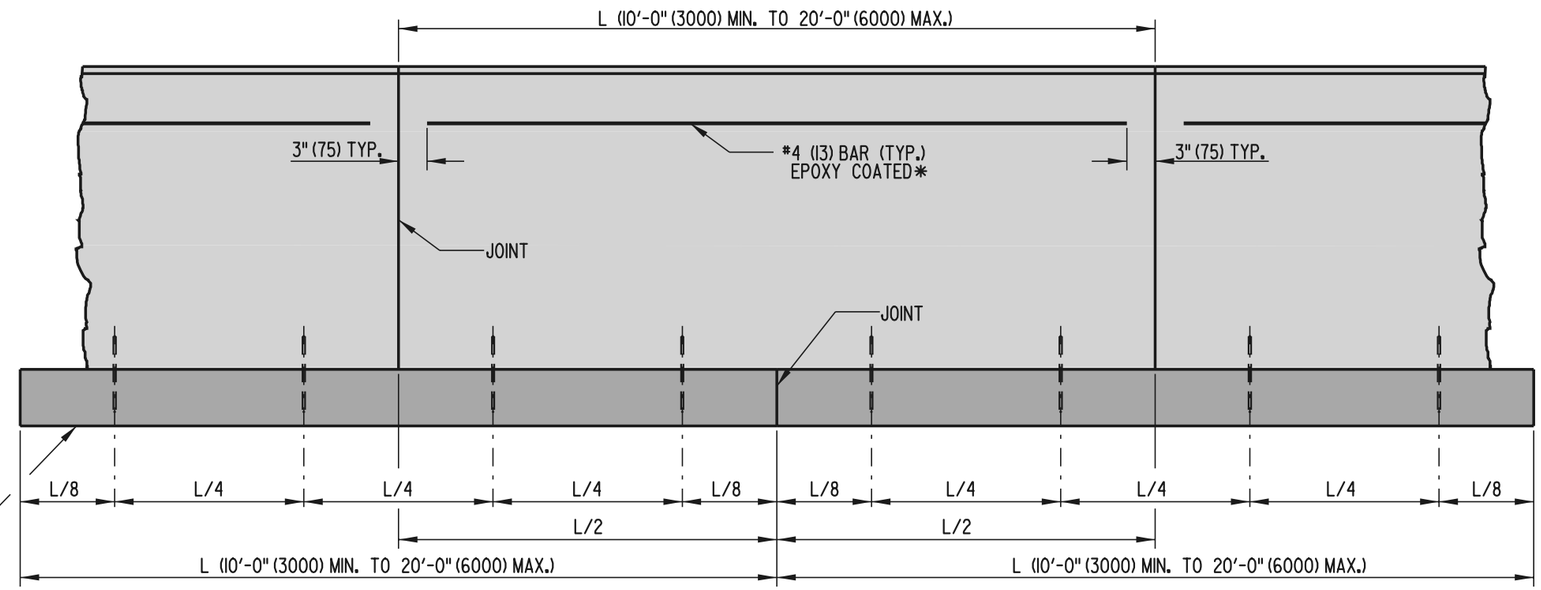

ELEVATION

TYPICAL CAST-IN-PLACE OR SLIP-FORM CONSTRUCTION

* BAR SHALL BE CUT AT EVERY JOINT IF MADE CONTINUOUS FOR SLIP-FORM CONSTRUCTION

DELAWARE DEPARTMENT OF TRANSPORTATION	CONCRETE SAFETY BARRIER (F SHAPE)		APPROVED CHIEF ENGINEER DATE 6/18/01
	STANDARD NO. B-14 (2001)	SHT. 1 OF 3	RECOMMENDED DESIGN ENGINEER DATE 6/18/01

05/21/2001

SCALE : N.T.S.

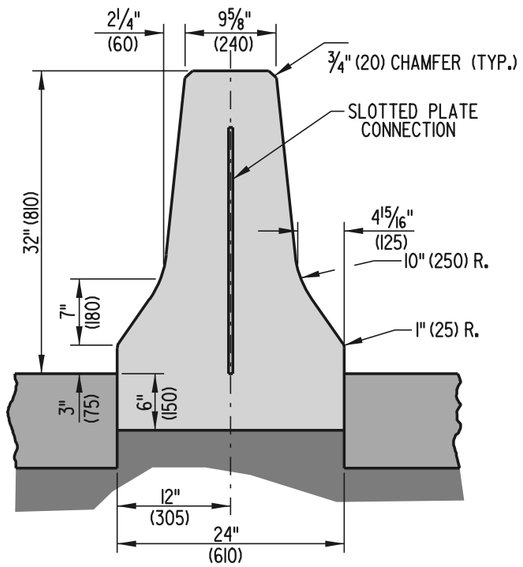

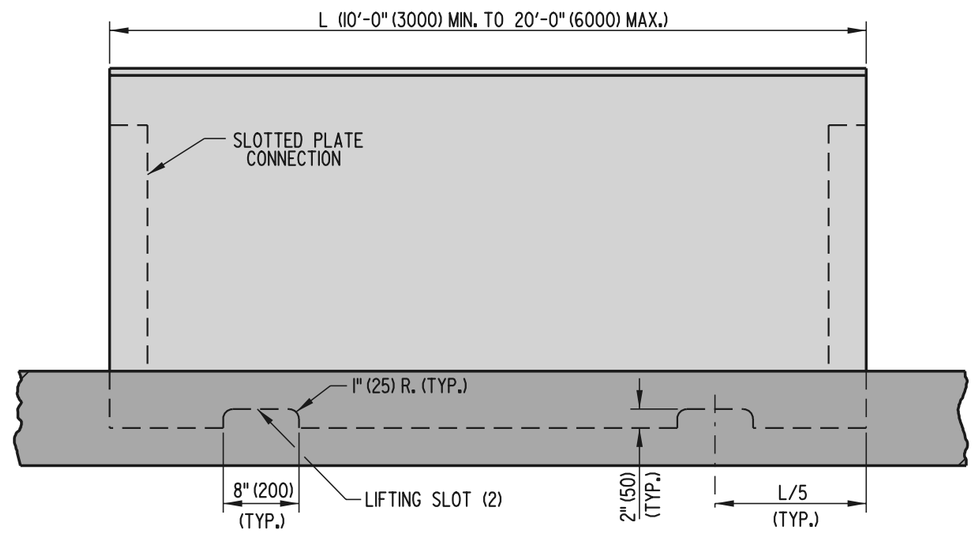

TYPICAL PRE-CAST CONSTRUCTON

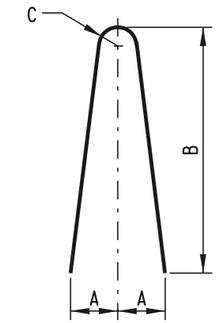

TYPE '1' BAR

BAR OFFSETS		
NOMINAL LENGTH OF BARRIER UNIT	"X"	NO. REQ'D FOR EACH BARRIER UNIT
20' (6000)	6' - 11" (2100)	2
18' (5500)	6' - 5" (1950)	2
16' (5000)	5' - 11" (1800)	2
14' (4500)	7' - 0" (2250)	1
12' (4000)	6' - 0" (2000)	1
10' (3000)	5' - 0" (1500)	1

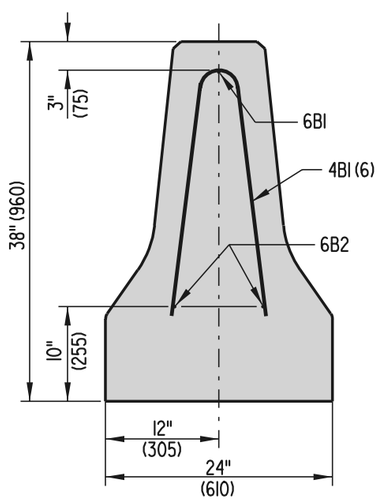

'F' SHAPE BARRIER SECTION

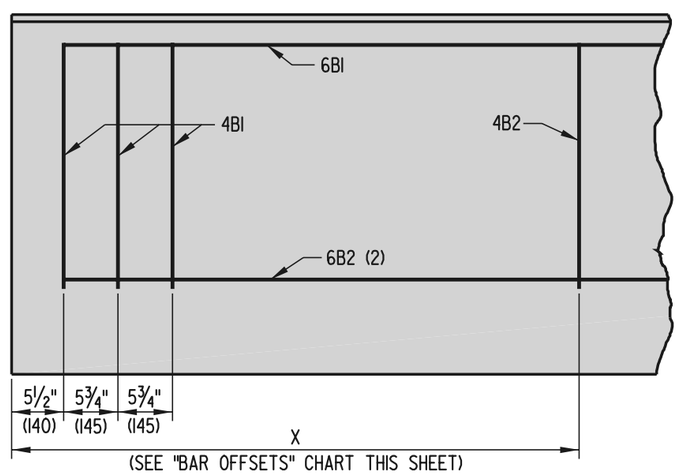

ELEVATION

BAR LIST							
MARK	SIZE	NUMBER IN EACH SECTION	LENGTH	TYPE	A	B	C
4B1	4 (13)	6	4'-7" (1400)	1	5" (125)	26" (660)	2" (50)
4B2	4 (13)	**	4'-7" (1400)	1	5" (125)	26" (660)	2" (50)
6B1	6 (19)	1	*	STR.			
6B2	6 (19)	2	*	STR.			

* THE LENGTH OF BARS 6B1 AND 6B2 SHALL BE 11" (280) SHORTER IN LENGTH THAN THE NOMINAL SIZE OF THE BARRIER IN WHICH IT IS USED.

** SEE "BAR OFFSETS" CHART ON THIS SHEET FOR MORE INFORMATION.

TYPICAL PRE-CAST REINFORCEMENT DETAILS

NOTES: 1). CONCRETE CLEAR COVER FOR REINFORCING BARS SHALL BE 1½" (40) MIN..

DELAWARE DEPARTMENT OF TRANSPORTATION	CONCRETE SAFETY BARRIER (F SHAPE)		APPROVED CHIEF ENGINEER DATE 6/18/01
	STANDARD NO. B-14 (2001)	SHT. 2 OF 3	RECOMMENDED DESIGN ENGINEER DATE 6/15/01

04/17/2001

SCALE : N.T.S.

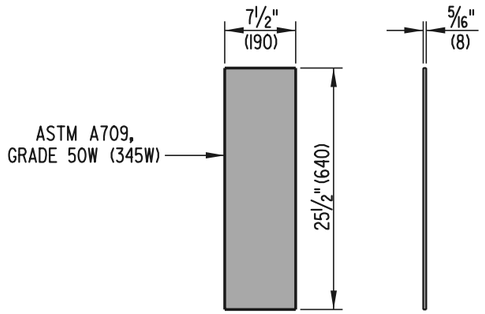

STEEL CONNECTOR PLATE

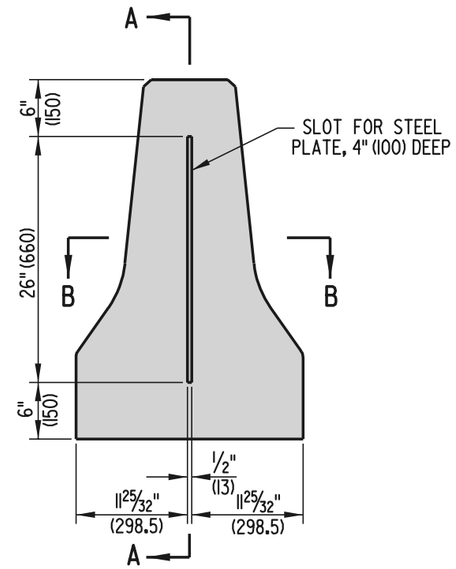

SLOT DIMENSIONS

CONCRETE SAFETY BARRIER, PRECAST CONSTRUCTION
'F' SHAPE BARRIER SECTION

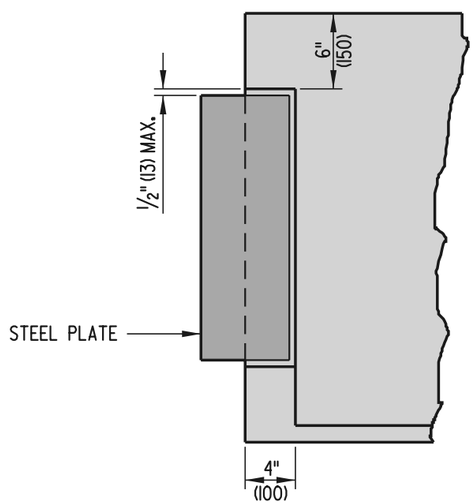

SECTION A-A

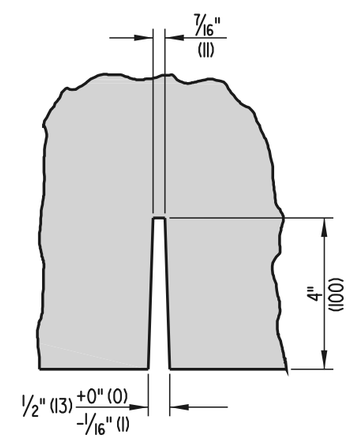

SECTION B-B

DELAWARE DEPARTMENT OF TRANSPORTATION	SLOTTED PLATE CONNECTION DETAILS		APPROVED [signature] CHIEF ENGINEER 6/18/01 DATE
	STANDARD NO. B-14 (2001)	SHT. 3 OF 3	RECOMMENDED [signature] DESIGN ENGINEER 6/15/01 DATE

04/17/2001

SCALE : N.T.S.

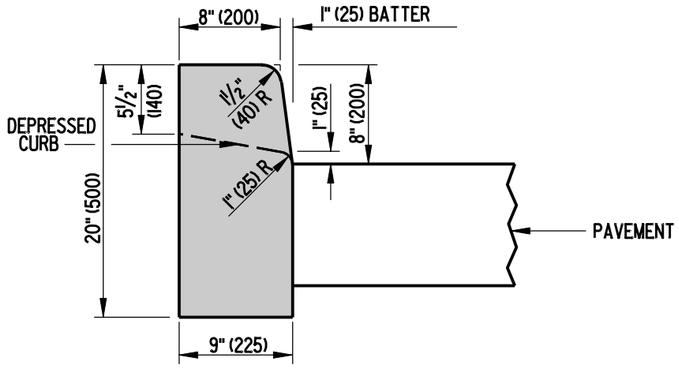

P.C.C. CURB
TYPE 1

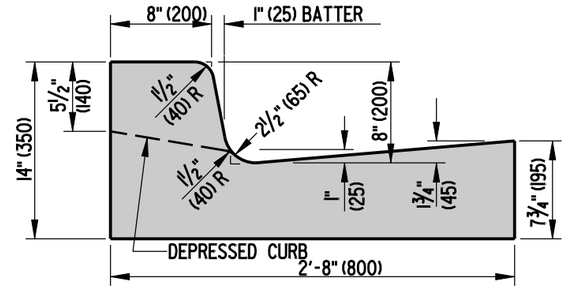

INTEGRAL P.C.C. CURB AND GUTTER
TYPE 1

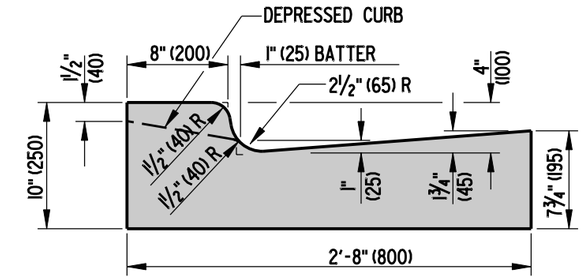

INTEGRAL P.C.C. CURB AND GUTTER
TYPE 4

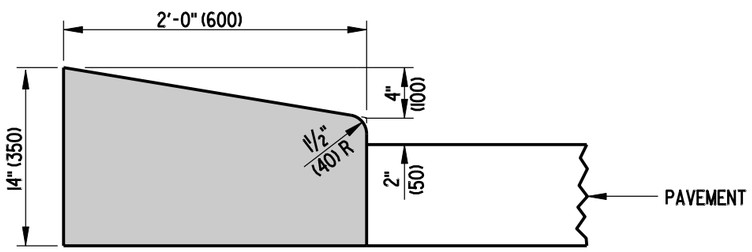

P.C.C. CURB
TYPE 2

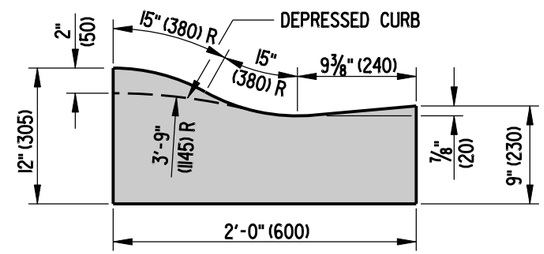

INTEGRAL P.C.C. CURB AND GUTTER
TYPE 2

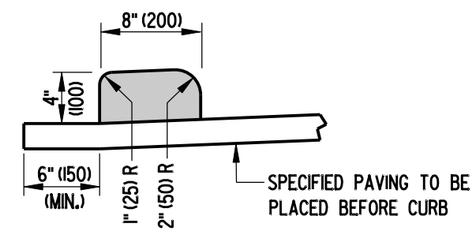

HOT-MIX, HOT LAID BITUMINOUS CONCRETE CURB

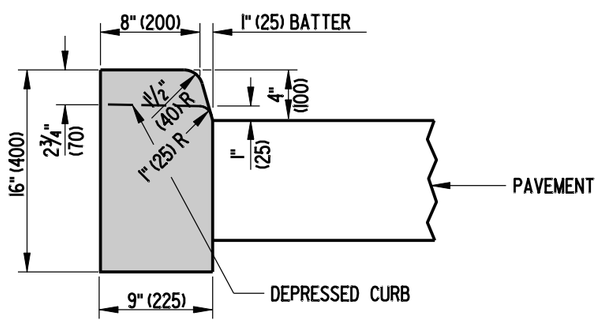

P.C.C. CURB
TYPE 3

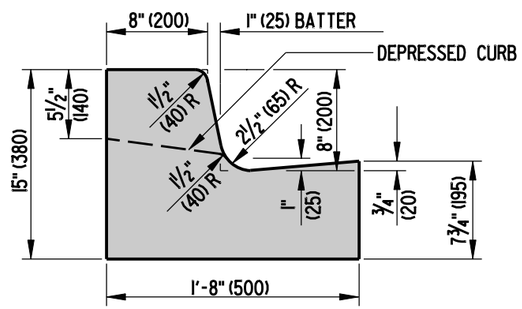

INTEGRAL P.C.C. CURB AND GUTTER
TYPE 3

NOTES:

1. WHEN P.C.C. CURB OR INTEGRAL P.C.C. CURB AND GUTTER IS PLACED ADJACENT TO PORTLAND CEMENT CONCRETE PAVEMENT, CONSTRUCT THE JOINT AS PER THE LONGITUDINAL JOINT SEALANT DETAIL ON STANDARD P-2, SHEET 3 OF 5. USE APPROVED JOINT FILLER TO SEAL. WORK TO BE PAID UNDER RESPECTIVE CURB AND GUTTER ITEM.
2. DEPRESS CURB AT ENTRANCES AS DETAILED ON THIS SHEET.
3. DEPRESS CURB FLUSH WITH PAVEMENT AT CURB RAMPS. MAXIMUM SLOPE OF CURB AT CURB RAMPS IS 20:1 IN THE DIRECTION OF PEDESTRIAN TRAVEL. SEE STANDARD NO C-2, 1 OF 4.
4. DEPRESS CURB FLUSH WITH PAVEMENT OR ADJACENT AREA AT NOSE OF ISLANDS, TAPERING BACK TO FULL HEIGHT AT A SLOPE OF 12:1.

DELAWARE DEPARTMENT OF TRANSPORTATION	P.C.C. CURB, P.C.C. CURB & GUTTER, AND HOT-MIX CURB		APPROVED CHIEF ENGINEER — DATE 10/24/07
	STANDARD NO. C-1 (2007)	SHT. 1 OF 1	RECOMMENDED DESIGN ENGINEER — DATE 10/23/07

06/12/2007

SCALE : N.T.S.

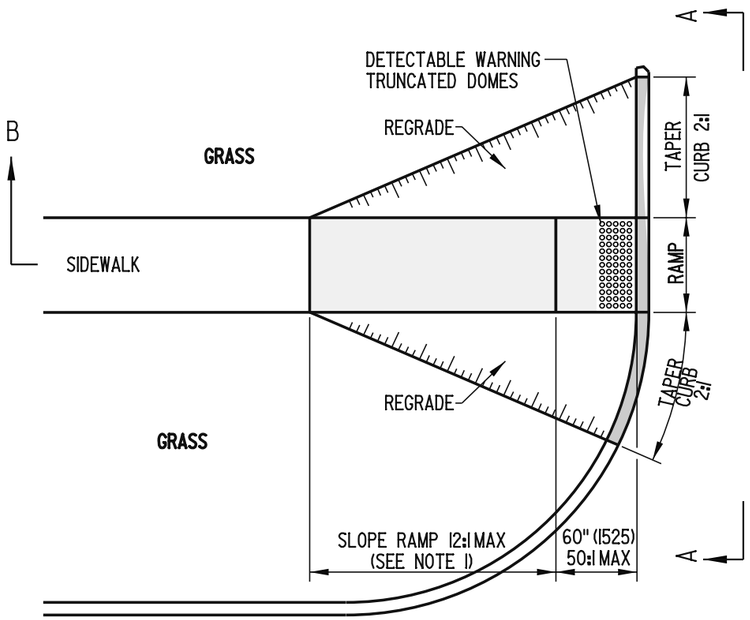

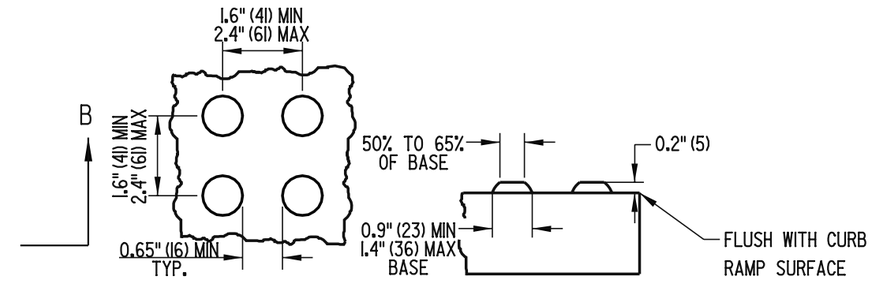

DETECTABLE WARNING TRUNCATED DOME DETAILS

NOTES:

A). THE AREA OF DETECTABLE WARNING TRUNCATED DOMES SHALL BE 24" (600) LONG AND THE FULL WIDTH OF THE RAMP OR DEPRESSED CURB.

B). SEE SPECIFICATION FOR ADDITIONAL INFORMATION.

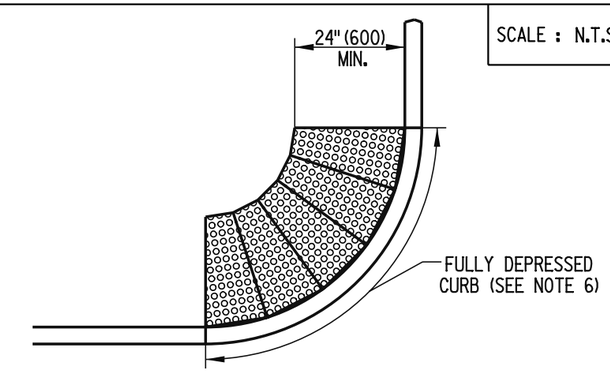

SAMPLE LAYOUT OF DETECTABLE WARNING TRUNCATED DOMES ALONG A CURB RADIUS

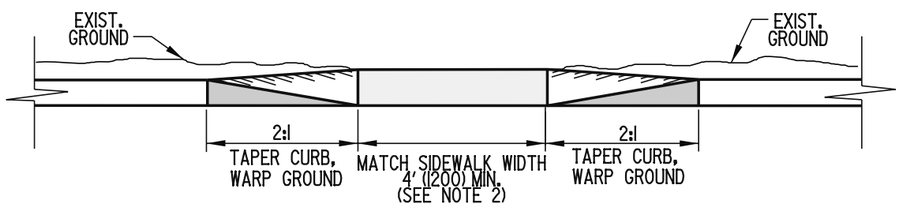

ELEVATION A-A

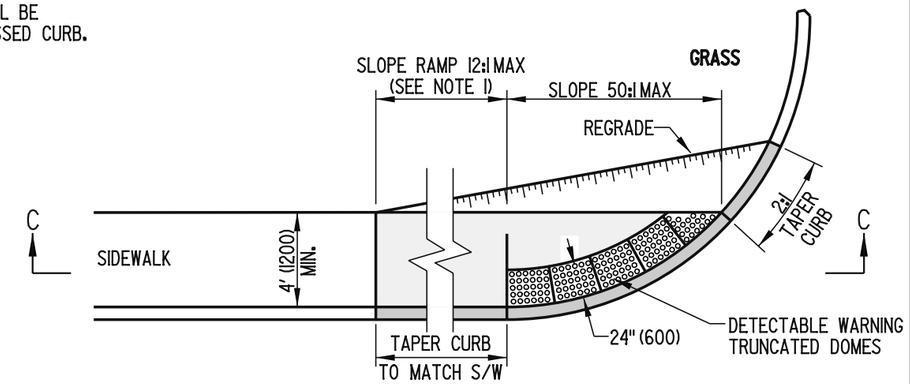

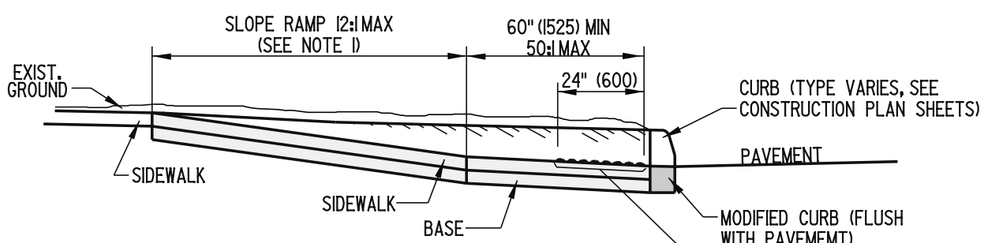

SECTION B-B

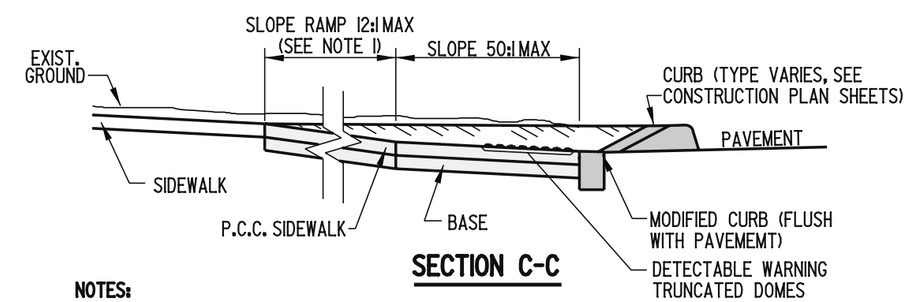

SECTION C-C

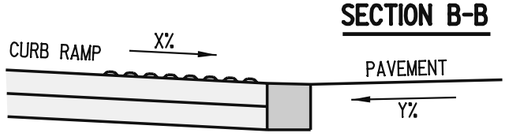

MAXIMUM DIFFERENCE IN GRADE

FOR EXAMPLE, IF THE CURB RAMP AND DEPRESSED CURB SLOPE (X) IS 8.1% AND THE PAVEMENT SLOPE (Y) IS 4.0%, THEN TO DETERMINE THE DIFFERENCE IN GRADE, ADD X + Y TO GET 12.1%. WHICH IS GREATER THAN THE 14% PREFERRED BUT LESS THAN THE 13% MAXIMUM.

CURB RAMP, TYPE I

PERPENDICULAR CURB RAMP

NOTES:

1). WHERE A 12:1 MAXIMUM SLOPE RAMP WILL NOT MEET THE SIDEWALK GRADE WITHIN A LENGTH OF 15' (4570) DUE TO STEEP ADJACENT ROADWAY, THE RAMP LENGTH MAY BE LIMITED TO 15' (4570), AND ALLOWED TO EXCEED 12:1.

2). RAMP WIDTH SHALL BE 4' (1200) MINIMUM, HOWEVER, 5' (1525) IS PREFERRED.

3). RAMP AND SIDEWALK CROSS SLOPE SHALL BE 50:1 (2%) MAXIMUM.

4). IF GRADING WILL BE STEEPER THAN 6:1, THEN A TYPE I CURB OR RETAINING WALL SHOULD BE USED TO ELIMINATE THE NEED FOR THE STEEP SLOPE.

5). THE MAXIMUM DIFFERENCE IN GRADE BETWEEN THE CURB RAMP OR MODIFIED CURB AND THE PAVEMENT SHALL BE 13%, HOWEVER 11% IS PREFERRED.

6). IF THE WIDTH OF THE FULLY DEPRESSED CURB AT THE STREET IS 5' (1525) OR LESS, THEN A RECTANGULAR PIECE OF DETECTABLE WARNING TRUNCATED DOMES MAY BE USED.

DELAWARE DEPARTMENT OF TRANSPORTATION	CURB RAMP, TYPE 1 AND SECTIONS		APPROVED CHIEF ENGINEER — DATE 10/10/06
	STANDARD NO. C-2 (2006)	SHT. 1 OF 4	RECOMMENDED DESIGN ENGINEER — DATE 10/9/06

08/03/2006

SCALE : N.T.S.

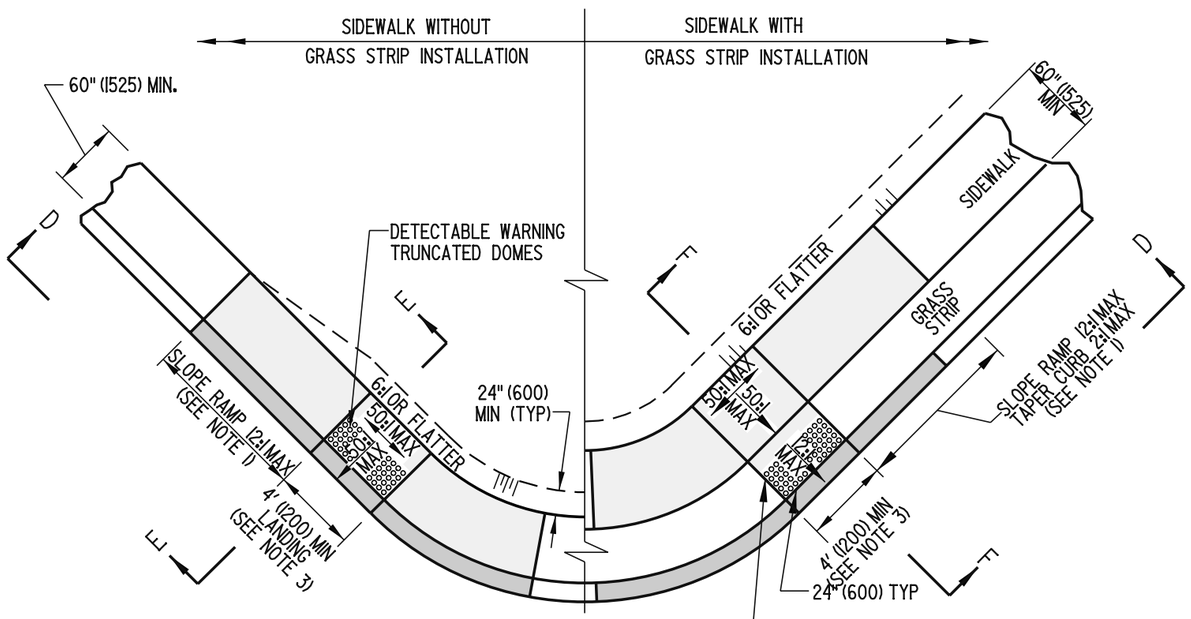

CURB RAMP, TYPE 2

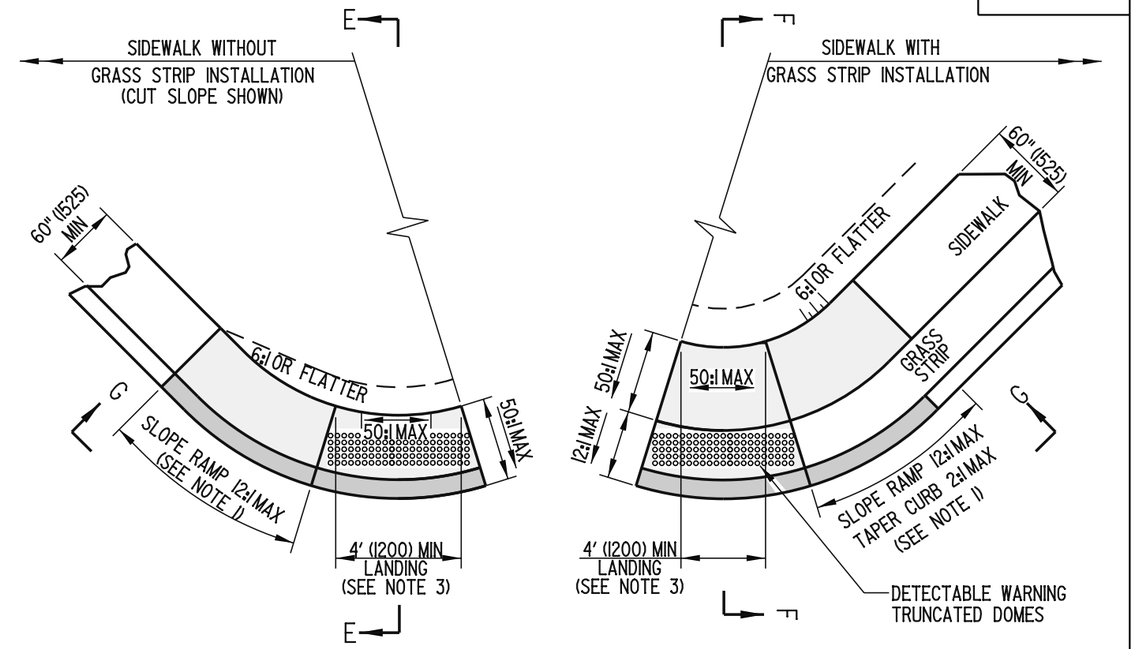

CURB RAMP, TYPE 3

DIAGONAL CURB RAMP

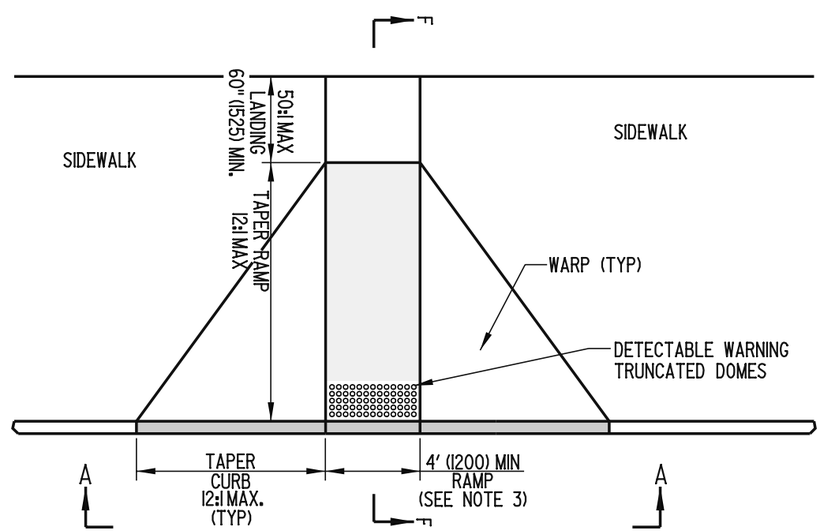

CURB RAMP, TYPE 4

PERPENDICULAR CURB RAMP

NOTES:

1). WHERE A 12:1 MAXIMUM SLOPE RAMP WILL NOT MEET THE SIDEWALK GRADE WITHIN A LENGTH OF 15' (4570) DUE TO STEEP ADJACENT ROADWAY, THE RAMP LENGTH MAY BE LIMITED TO 15' (4570), AND THE RAMP SLOPE ALLOWED TO EXCEED 12:1.
2). TRANSITION TO EXISTING SIDEWALK WIDTH OVER THE LENGTH OF THE RAMP.
3). RAMP OR LANDING WIDTH SHALL BE 4' (1200) MINIMUM, HOWEVER, 5' (1525) IS PREFERRED.
4). RAMP AND SIDEWALK CROSS SLOPE SHALL BE 50:1 (2%) MAXIMUM.
5). IF GRADING WILL BE STEEPER THAN 6:1 ADJACENT TO THE CURB RAMP OR SIDEWALK, THEN A TYPE I CURB OR RETAINING WALL SHOULD BE USED TO ELIMINATE THE NEED FOR THE STEEP SLOPE.
6). FOR THE CURB RAMP, TYPE 3, IF THE WIDTH OF THE FULLY DEPRESSED CURB AT THE STREET IS MORE THAN 5' (1525), THE THE DETECTABLE WARNING TRUNCATED DOMES SHALL FOLLOW THE RADIUS OF THE CURB CONTINUOUSLY WITHOUT GAPS FOR THE ENTIRE LENGTH OF DEPRESSED CURB. SEE STANDARD NO. C-2, SHEET 1 OF 4.
7). THE MAXIMUM DIFFERENCE IN GRADE BETWEEN THE SIDEWALK OR CURB AND THE PAVEMENT SHALL BE 13:1, HOWEVER 11:1 IS PREFERRED. SEE STANDARD NO. C-2, SHEET 1 OF 4.

DELAWARE DEPARTMENT OF TRANSPORTATION	CURB RAMPS, TYPES 2, 3, & 4		APPROVED CHIEF ENGINEER — DATE 10/10/06
	STANDARD NO. C-2 (2006)	SHT. 2 OF 4	RECOMMENDED DESIGN ENGINEER — DATE 10/9/06

08/14/2006

SCALE : N.T.S.

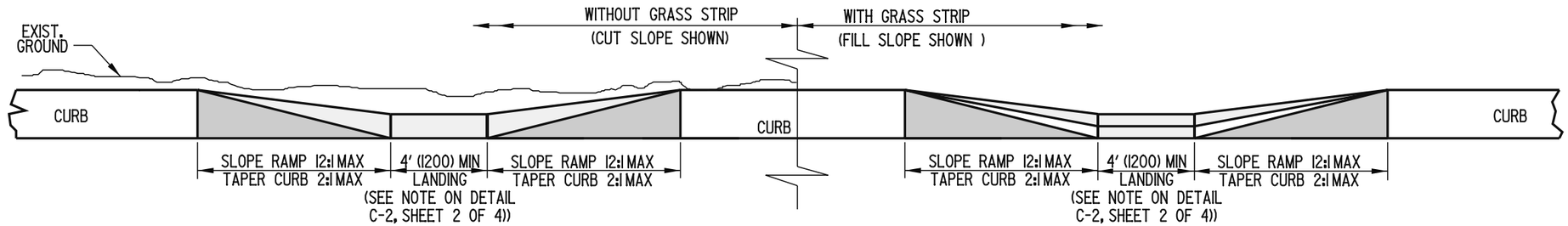

ELEVATION D-D

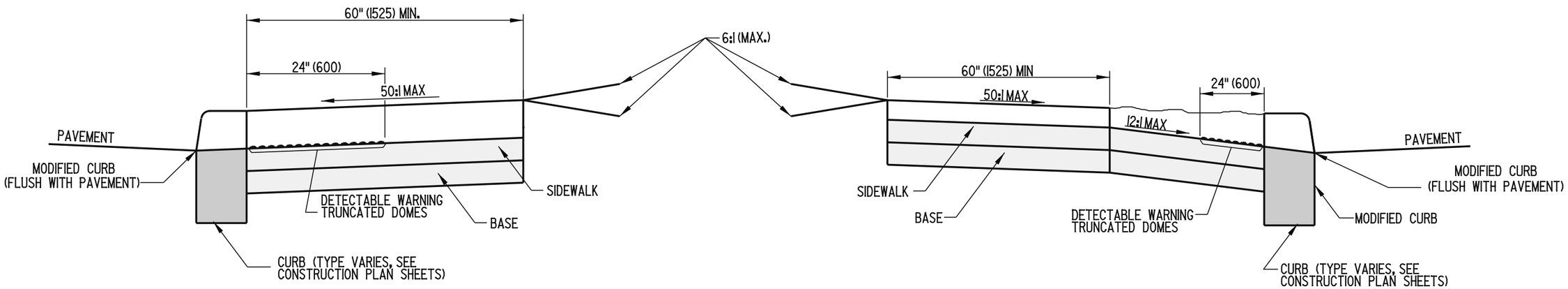

SECTION E-E

SECTION F-F

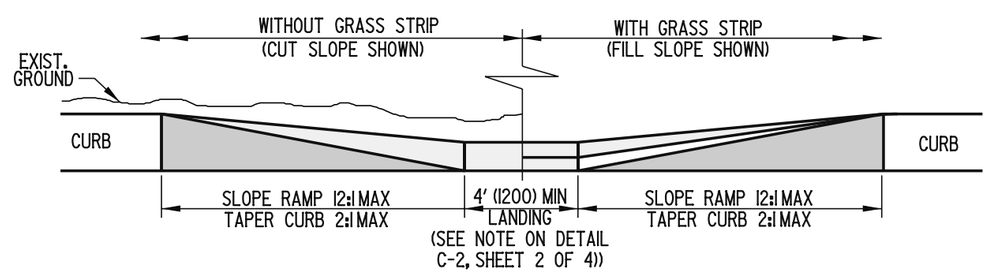

ELEVATION G-G

DELAWARE DEPARTMENT OF TRANSPORTATION	CURB RAMP SECTIONS FOR TYPES 2 & 3		APPROVED CHIEF ENGINEER — DATE 10/10/06
	STANDARD NO. C-2 (2006)	SHT. 3 OF 4	RECOMMENDED DESIGN ENGINEER — DATE 10/9/06

10/02/2006

SCALE : N.T.S.

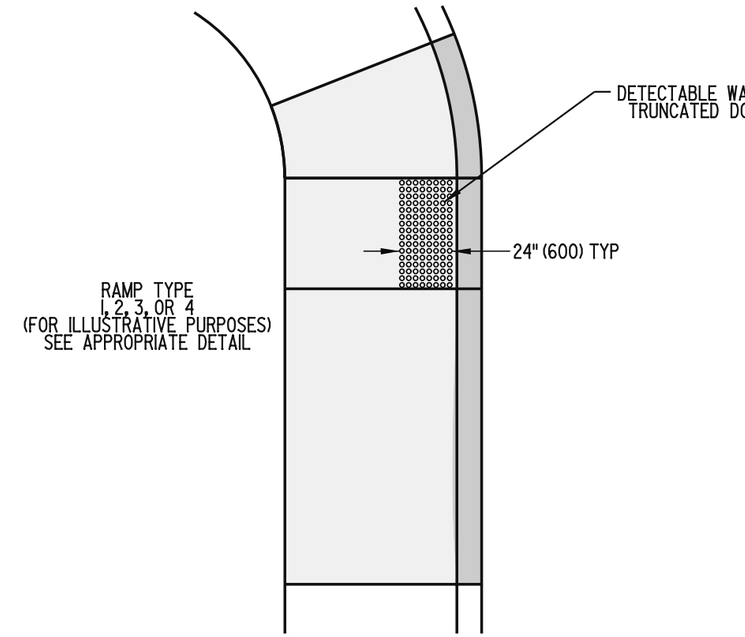

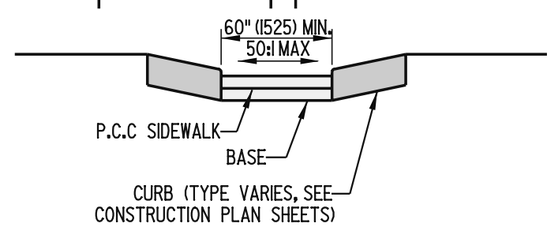

SECTION H-H

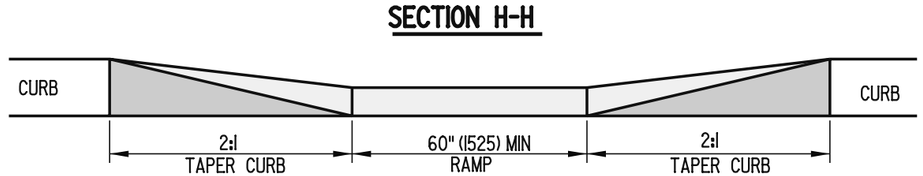

ELEVATION I-I

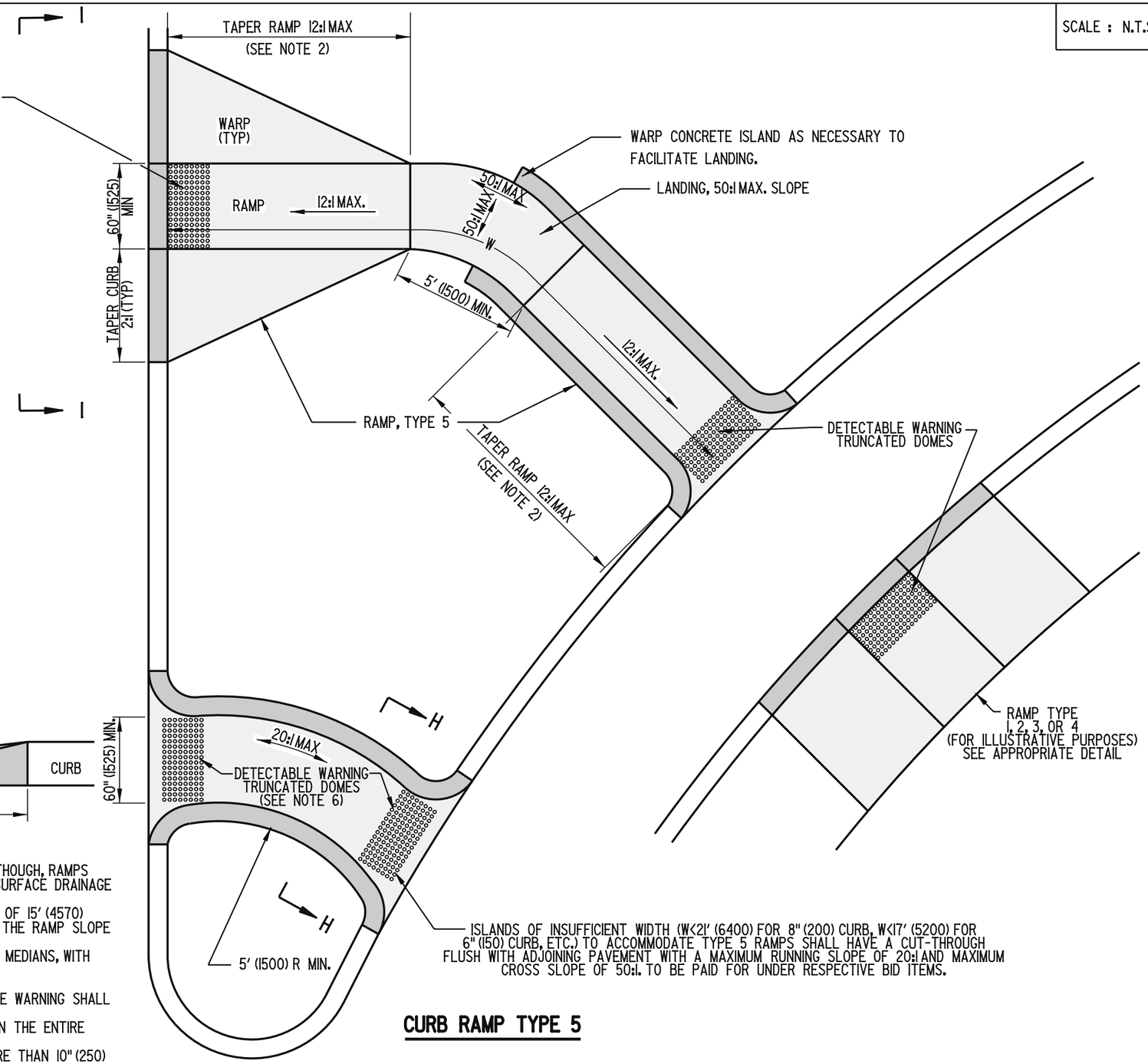

CURB RAMP TYPE 5

NOTES:

1). A CUT-THROUGH LEVEL WITH THE STREET IS THE PREFERRED TREATMENT FOR ISLANDS, ALTHOUGH, RAMPS CAN BE USED WHERE THE ISLAND WIDTH IS SUFFICIENT TO ACCOMMODATE THEM. POSITIVE SURFACE DRAINAGE MUST BE PROVIDED FOR EITHER TREATMENT. EITHER TREATMENT IS ACCEPTABLE.

2). WHERE A 12:1 MAXIMUM SLOPE RAMP WILL NOT MEET THE SIDEWALK GRADE WITHIN A LENGTH OF 15' (4570) DUE TO STEEP ADJACENT ROADWAY, THE RAMP LENGTH MAY BE LIMITED TO 15' (4570), AND THE RAMP SLOPE ALLOWED TO EXCEED 12:1.

3). A CONTINUOUS PATH MUST BE PROVIDED BETWEEN ADJACENT CURB RAMPS IN ISLANDS AND MEDIANS, WITH A MAXIMUM RUNNING SLOPE OF 20:1.

4). RAMP AND SIDEWALK CROSS SLOPE SHALL BE 50:1 (2%) MAXIMUM.

5). WHERE THERE IS NO DEPRESSED CURB AT A CUT-THROUGH OR CURB RAMP, THE DETECTABLE WARNING SHALL BE INSTALLED 3" (75) FROM THE ROADWAY PAVEMENT.

6). IF THE MINIMUM CLEAR SPACE BETWEEN DETECTABLE WARNINGS IS LESS THAN 2' (600), THEN THE ENTIRE MEDIAN CURB RAMP AREA SHALL BE COVERED WITH DETECTABLE WARNINGS.

7). PEDESTRIAN SIGNALS SHALL BE ACCESSIBLE WITH A LEVEL LANDING, WHOSE EDGE IS NO MORE THAN 10" (250) FROM ALL PEDESTRIAN PUSH BUTTONS.

DELAWARE DEPARTMENT OF TRANSPORTATION	CURB RAMP TYPE 5 & SECTIONS		APPROVED CHIEF ENGINEER — DATE 10/10/06
	STANDARD NO. C-2 (2006)	SHT. 4 OF 4	RECOMMENDED DESIGN ENGINEER — DATE 10/9/06

08/03/2006

SCALE : N.T.S.

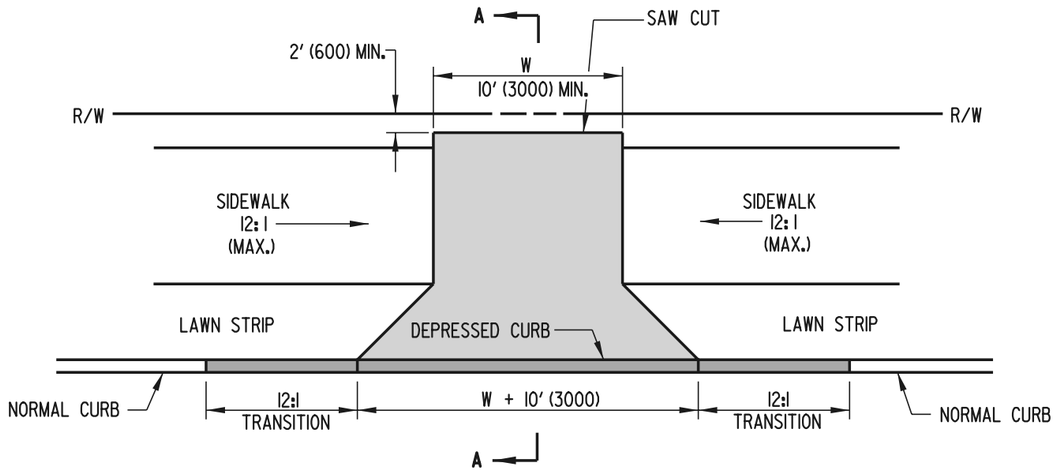

PLAN

URBAN APPLICATION

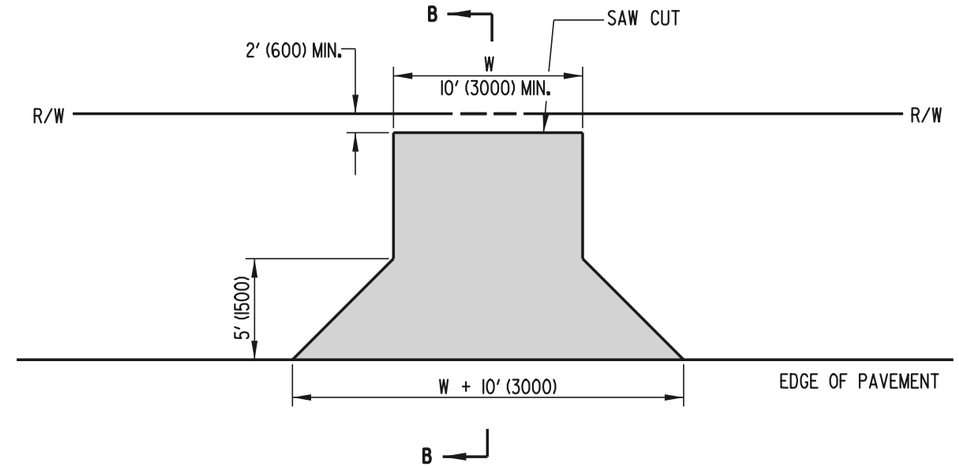

PLAN

RURAL APPLICATION

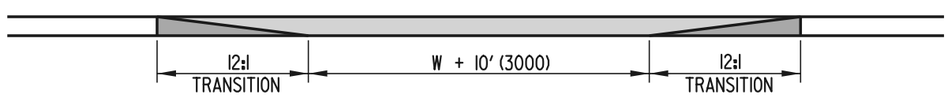

ELEVATION

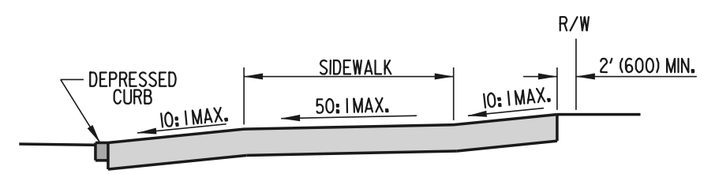

SECTION A-A

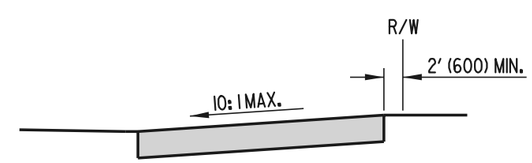

SECTION B-B

DELAWARE DEPARTMENT OF TRANSPORTATION	ENTRANCES		APPROVED CHIEF ENGINEER DATE 6/18/01
	STANDARD NO. C-3 (2001)	SHT. 1 OF 1	RECOMMENDED DESIGN ENGINEER DATE 6/15/01

03/09/2001

SCALE : N.T.S.

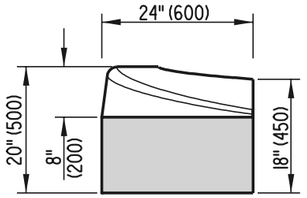

SECTION A-A

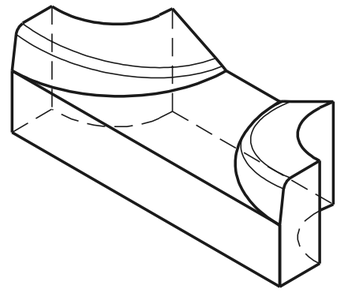

ISOMETRIC VIEW

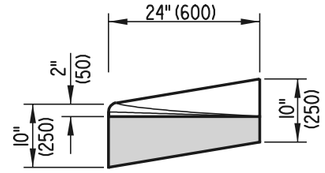

SECTION B-B

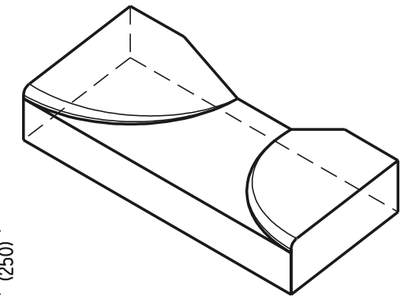

ISOMETRIC VIEW

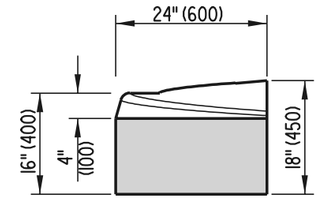

SECTION C-C

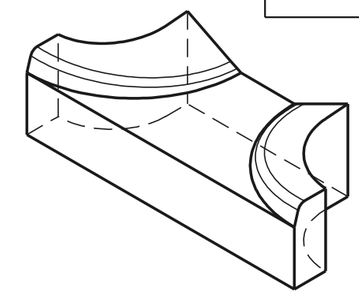

ISOMETRIC VIEW

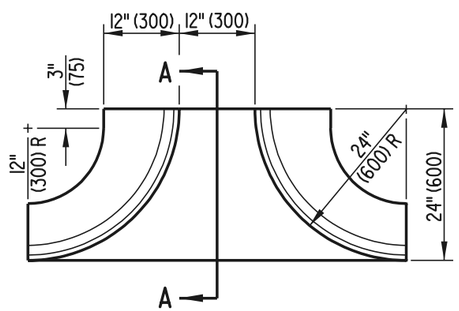

TOP VIEW

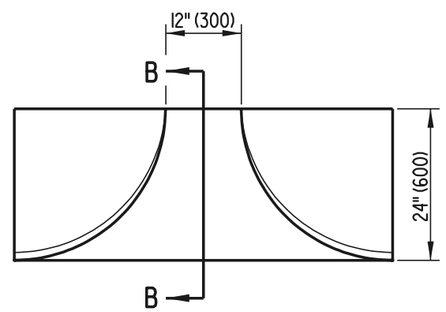

TOP VIEW

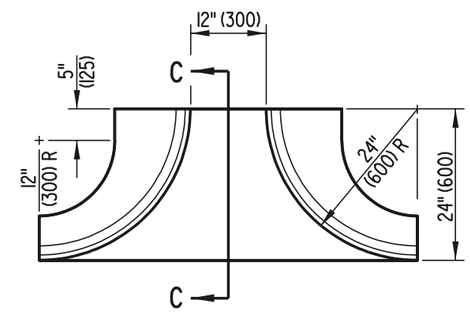

TOP VIEW

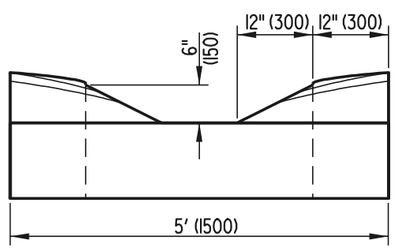

FRONT VIEW

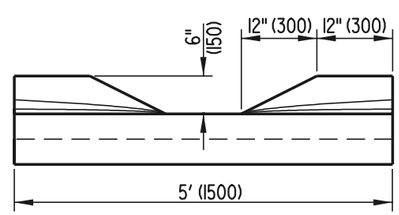

FRONT VIEW

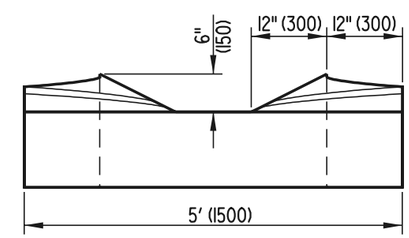

FRONT VIEW

TYPE A

P.C.C. CURB, TYPE 1

TYPE B

P.C.C. CURB, TYPE 2

TYPE C

P.C.C. CURB, TYPE 3

DELAWARE DEPARTMENT OF TRANSPORTATION	CURB OPENINGS		APPROVED CHIEF ENGINEER 6/18/01 DATE
	STANDARD NO. C-4 (2001)	SHT. 1 OF 3	RECOMMENDED DESIGN ENGINEER 6/15/01 DATE

04/17/2001

SCALE : N.T.S.

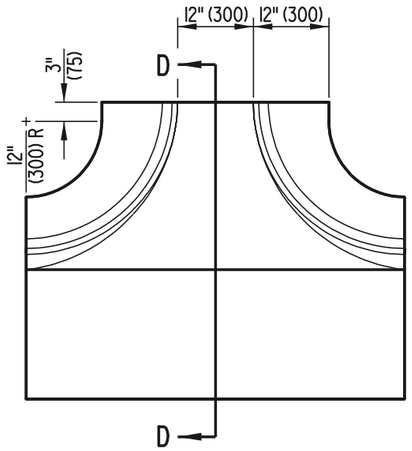

TOP VIEW

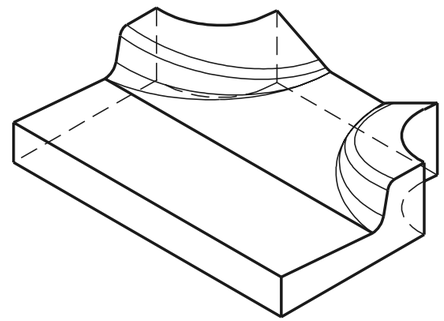

ISOMETRIC VIEW

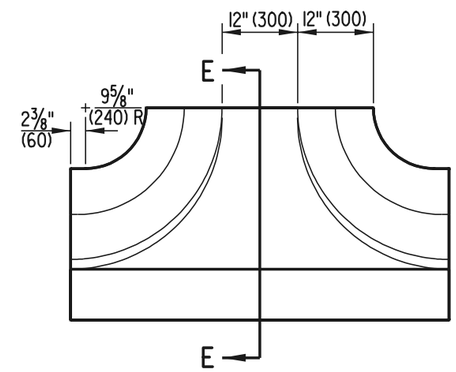

TOP VIEW

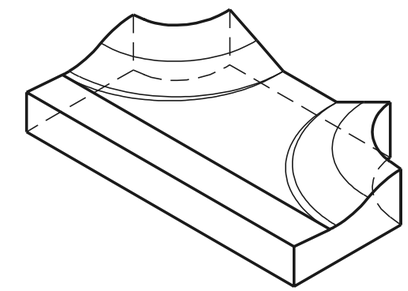

ISOMETRIC VIEW

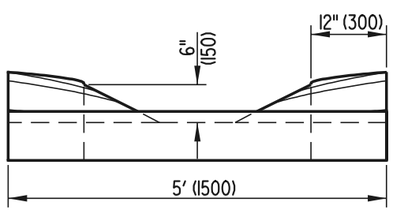

FRONT VIEW

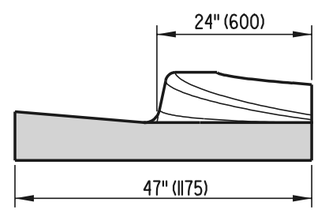

SECTION D-D

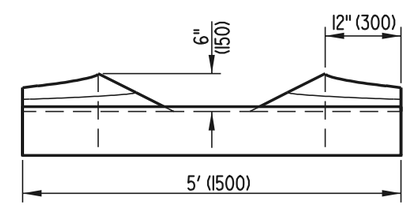

FRONT VIEW

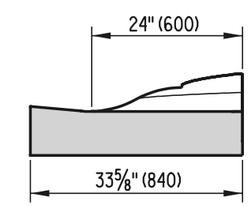

SECTION E-E

TYPE D

INTEGRAL P.C.C. CURB AND GUTTER, TYPE 1

TYPE E

INTEGRAL P.C.C. CURB AND GUTTER, TYPE 2

DELAWARE DEPARTMENT OF TRANSPORTATION	CURB OPENINGS			APPROVED [signature] CHIEF ENGINEER 6/18/01 DATE
	STANDARD NO. C-4 (2001)	SHT. 2 OF 3		RECOMMENDED [signature] DESIGN ENGINEER 6/15/01 DATE

03/09/2001

SCALE : N.T.S.

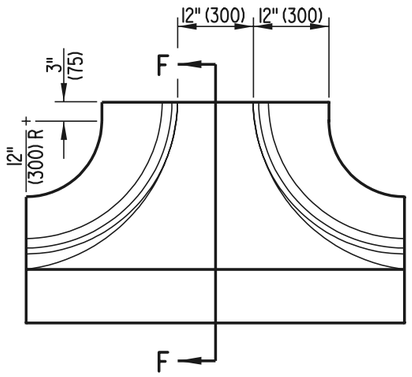

TOP VIEW

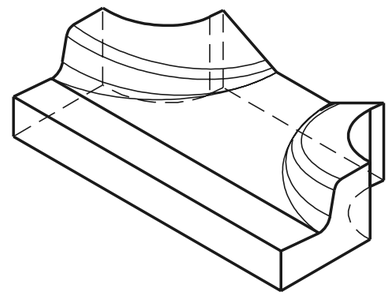

ISOMETRIC VIEW

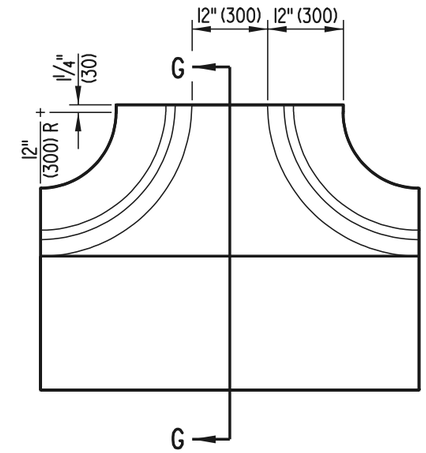

TOP VIEW

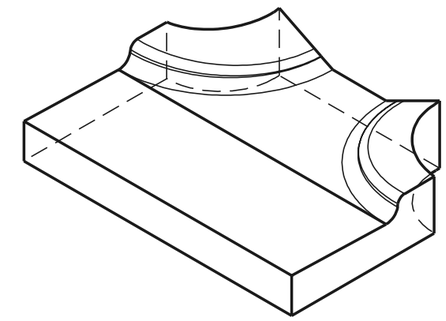

ISOMETRIC VIEW

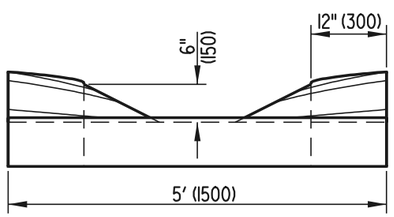

FRONT VIEW

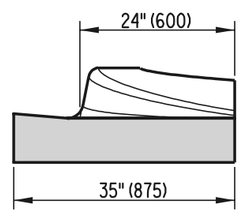

SECTION F-F

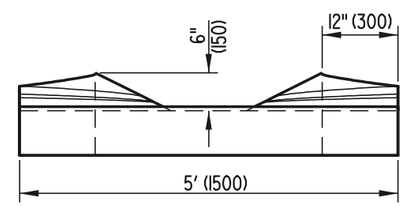

FRONT VIEW

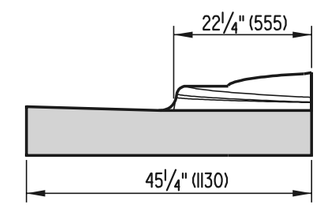

SECTION G-G

TYPE F

INTEGRAL P.C.C. CURB AND GUTTER, TYPE 3

TYPE G

INTEGRAL P.C.C. CURB AND GUTTER, TYPE 4

DELAWARE DEPARTMENT OF TRANSPORTATION	CURB OPENINGS		APPROVED CHIEF ENGINEER DATE 6/18/01
	STANDARD NO. C-4 (2001)	SHT. 3 OF 3	RECOMMENDED DESIGN ENGINEER DATE 6/15/01

03/09/2001

SCALE : N.T.S.

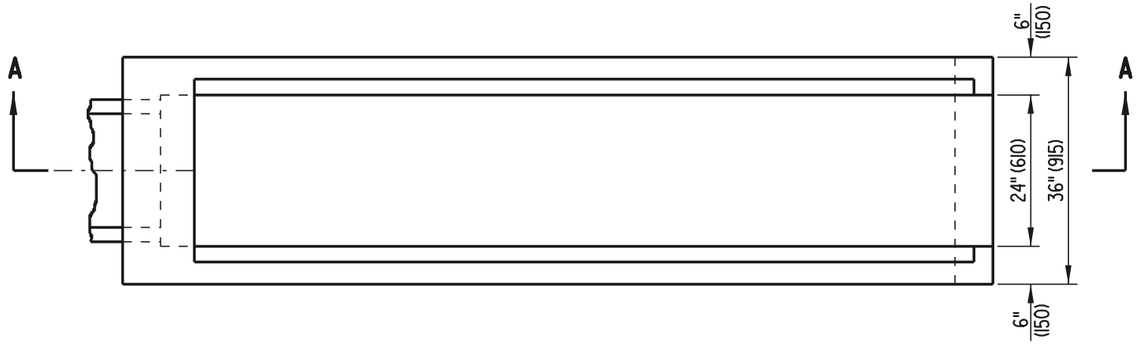

PLAN VIEW
SHOWN WITHOUT GRATE

NOTE: 6:1 SAFETY END STRUCTURE TO BE PRECAST

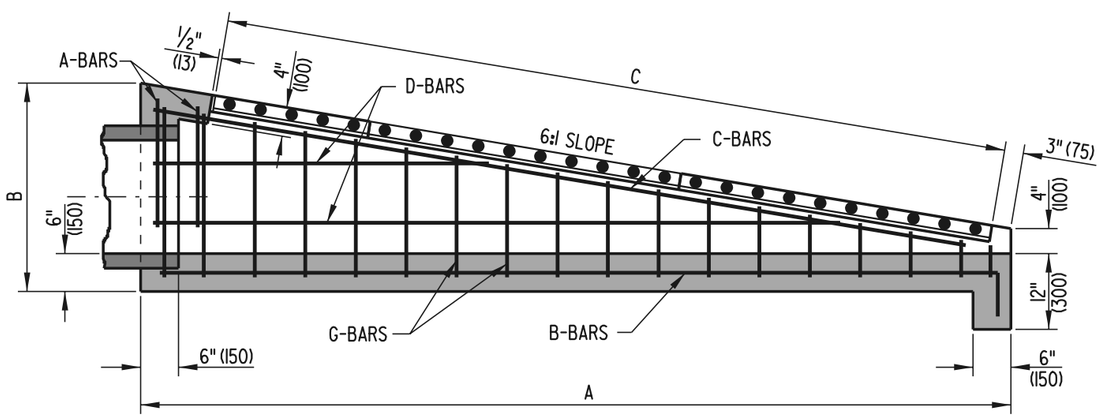

SECTION A-A

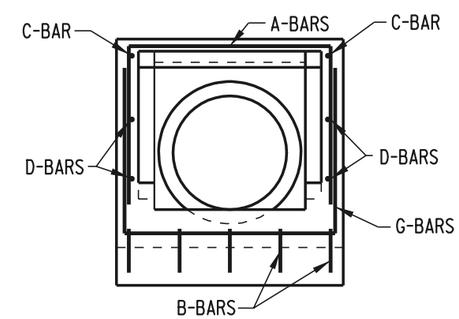

FRONT VIEW

DELAWARE DEPARTMENT OF TRANSPORTATION	6:1 SAFETY END STRUCTURE		APPROVED CHIEF ENGINEER DATE 6/18/01
	STANDARD NO. D-1 (2001)	SHT. 1 OF 2	RECOMMENDED DESIGN ENGINEER DATE 6/15/01

04/17/2001

SCALE : N.T.S.

DIMENSIONS

PIPE SIZE	A	B	C
15" (375)	9'-6" (2895)	2'-5" (735)	8'-4" (2540)
18" (450)	11'-6" (3505)	2'-9" (840)	10'-5" (3175)
21" (525) OR 24" (600)	14'-4" (4370)	3'-2⅝" (980)	12'-6" (3810)

BENDING DIAGRAM

PIPE SIZE	X
15" (375)	9'-2" (2795)
18" (450)	11'-2" (3405)
21" (525) OR 24" (610)	14'-0" (4265)

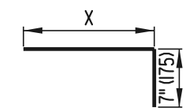

B-BARS

PIPE SIZE	Y
15" (375)	VARIES 25" (635) TO 4" (100)
18" (450)	VARIES 29" (735) TO 4" (100)
21" (525) OR 24" (610)	VARIES 34" (865) TO 4" (100)

G-BARS

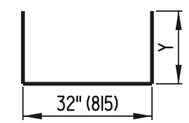

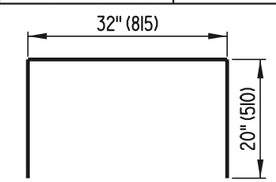

A-BARS

APPROXIMATE QUANTITIES

PIPE SIZE	CONCRETE FT³ (m³)		REINF. STEEL LBS. (kg)	NO. OF GRATES	LENGTH TO BE CUT FROM 1 GRATE	WEIGHT OF FULL SIZE GRATE LBS. (kg)	WEIGHT OF CUT GRATE LBS. (kg)
	CONC. PIPE	C.M. PIPE					
15" (375)	25 (0.708)	25.43 (0.720)	121.12 (54.94)	2	--	270.92 (122.89)	--
18" (450)	31.5 (0.892)	32.07 (0.908)	156.7 (71.08)	3	2'-1" (635)	270.92 (122.89)	135.47 (61.45)
21" (525) OR 24" (600)	40.75 (1.154)	39.87 (1.129)	194.0 (88.00)	3	--	270.92 (122.89)	--

SCHEDULE OF REINFORCING STEEL

PIPE SIZE	A-BARS				B-BARS				C-BARS				D-BARS				G-BARS			
	SIZE	NO.	SPA.	LENGTH	SIZE	NO.	SPA.	LENGTH	SIZE	NO.	SPA.	LENGTH	SIZE	NO.	SPA.	LENGTH	SIZE	NO.	SPA.	LENGTH
15" (375)	#4 (#13)	2	8" (200)	72" (1830)	#4 (#13)	5	8" (200)	9'-9" (2970)	#4 (#13)	2	-	9'-3" (2820)	#4 (#13)	4	8" (200)	VARIES 50" (1270) TO 100" (2540)	#4 (#13)	15	8" (200)	VARIES 40" (1015) TO 82" (2085)
18" (450)	#4 (#13)	2	8" (200)	72" (1830)	#4 (#13)	5	8" (200)	11'-9" (3580)	#4 (#13)	2	-	11'-5" (3480)	#4 (#13)	6	8" (200)	VARIES 43½" (1105) TO 130½" (3315)	#4 (#13)	18	8" (200)	VARIES 40" (1015) TO 90" (2285)
21" (525) OR 24" (600)	#4 (#13)	2	8" (200)	72" (1830)	#4 (#13)	5	8" (200)	14'-7" (4445)	#4 (#13)	2	-	14'-3" (4345)	#4 (#13)	6	8" (200)	VARIES 51" (1295) TO 153" (3885)	#4 (#13)	22	8" (200)	VARIES 40" (1015) TO 100" (2540)

DELAWARE
DEPARTMENT OF TRANSPORTATION

6:1 SAFETY END STRUCTURE

STANDARD NO. D-1 (2001) SHT. 2 OF 2

APPROVED CHIEF ENGINEER DATE 6/18/01

RECOMMENDED DESIGN ENGINEER DATE 6/15/01

04/17/2001

SCALE : N.T.S.

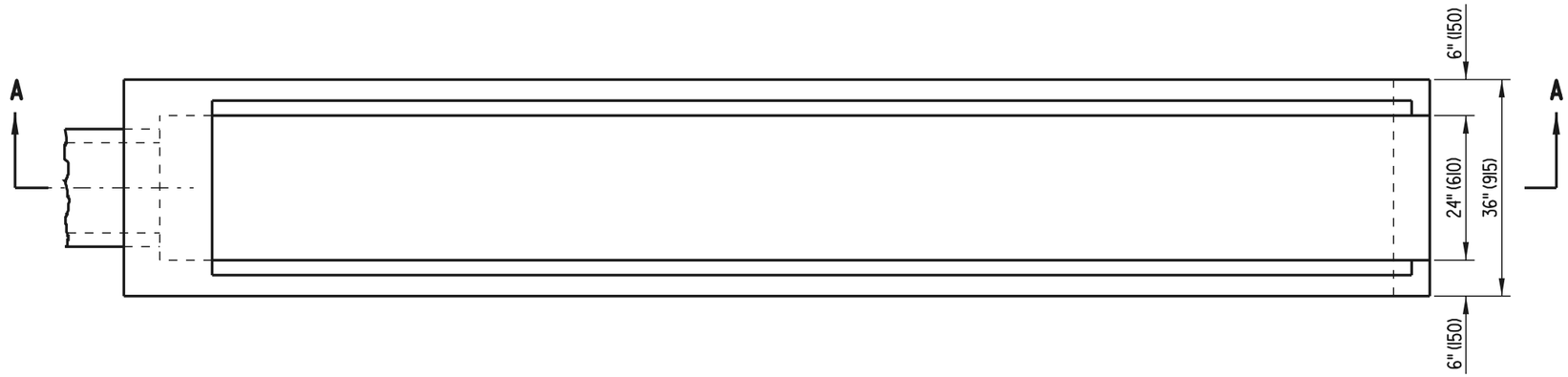

PLAN VIEW
SHOWN WITHOUT GRATE

NOTE: 10:1 SAFETY END STRUCTURE TO BE PRECAST

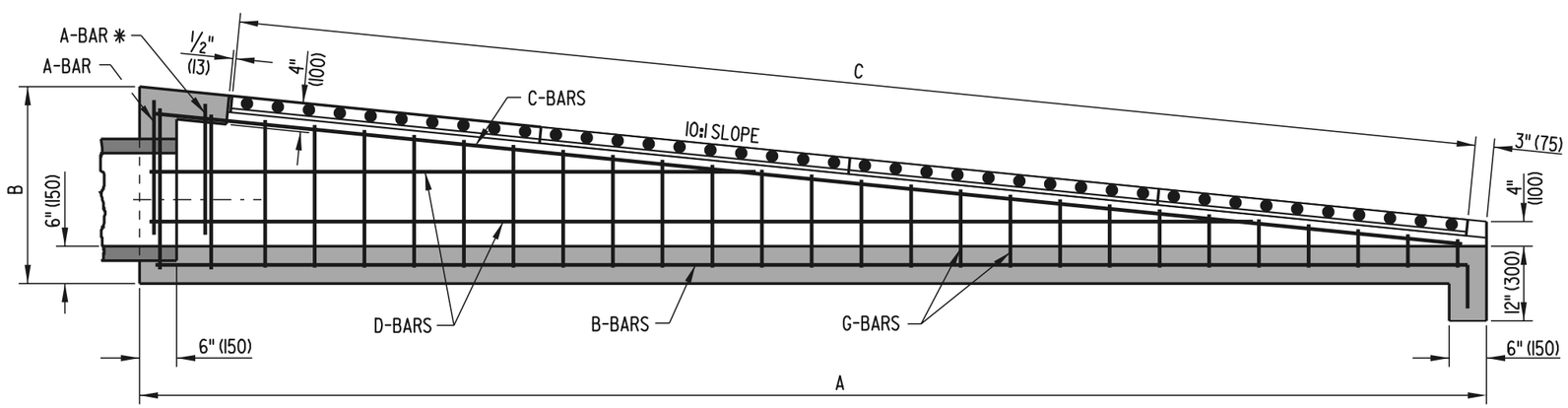

SECTION A-A

* REQUIRED ONLY FOR PIPE SIZE OF 21" (525) OR 24" (600)

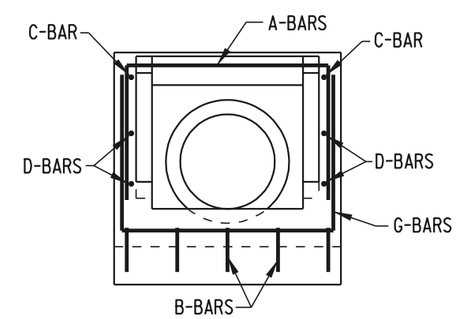

FRONT VIEW

DELAWARE DEPARTMENT OF TRANSPORTATION	10:1 SAFETY END STRUCTURE		APPROVED [signature] CHIEF ENGINEER 6/18/01 DATE
	STANDARD NO. D-2 (2001)	SHT. 1 OF 2	RECOMMENDED [signature] DESIGN ENGINEER 6/15/01 DATE

04/17/2001

SCALE : N.T.S.

DIMENSIONS

PIPE SIZE	A	B	C
15" (375)	15'-4" (4675)	2'-4 3/8" (720)	14'-7" (4445)
18" (450)	19'-6" (5945)	2'-9 3/8" (850)	18'-9" (5715)
21" (525) OR 24" (600)	24'-0" (7315)	3'-2 13/16" (985)	22'-11" (6985)

BENDING DIAGRAM

PIPE SIZE	X
15" (375)	15'-0" (4570)
18" (450)	19'-2" (5840)
21" (525) OR 24" (600)	23'-8" (7215)

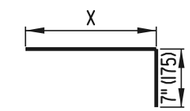

B-BARS

PIPE SIZE	Y
15" (375)	VARIES 21 1/2" (545) TO 4" (100)
18" (450)	VARIES 26 7/16" (670) TO 4" (100)
21" (525) OR 24" (600)	VARIES 31 3/4" (805) TO 4" (100)

G-BARS

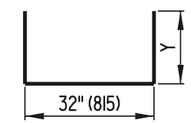

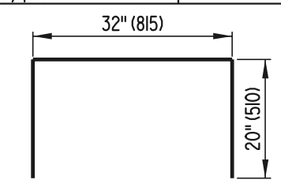

A-BARS

APPROXIMATE QUANTITIES

PIPE SIZE	CONCRETE FT³ (m³)		REINF. STEEL LBS. (kg)	NO. OF GRATES	LENGTH TO BE CUT FROM 1 GRATE	WEIGHT OF FULL SIZE GRATE LBS. (kg)	WEIGHT OF CUT GRATE LBS. (kg)
	CONC. PIPE	C.M. PIPE					
15" (375)	41.35 (1.171)	41.78 (1.183)	175.0 (79.38)	4	2'-1" (635)	270.92 (122.89)	135.47 (61.45)
18" (450)	50.11 (1.419)	50.68 (1.435)	227.0 (102.98)	5	2'-1" (635)	270.92 (122.89)	135.47 (61.45)
21" (525) OR 24" (600)	69.43 (1.966)	70.31 (1.991)	310.4 (140.79)	6	2'-1" (635)	270.92 (122.89)	135.47 (61.45)

SCHEDULE OF REINFORCING STEEL

PIPE SIZE	A-BARS				B-BARS				C-BARS				D-BARS				G-BARS			
	SIZE	NO.	SPA.	LENGTH	SIZE	NO.	SPA.	LENGTH	SIZE	NO.	SPA.	LENGTH	SIZE	NO.	SPA.	LENGTH	SIZE	NO.	SPA.	LENGTH
15" (375)	#4 (#13)	1	-	72" (1830)	#4 (#13)	5	8" (200)	15'-7" (4750)	#4 (#13)	2	-	15'-1 1/16" (4600)	#4 (#13)	4	8" (200)	VARIES 72 13/16" (1850) TO 145 5/8" (3700)	#4 (#13)	24	8" (200)	VARIES 40" (1015) TO 75 11/16" (1920)
18" (450)	#4 (#13)	1	-	72" (1830)	#4 (#13)	5	8" (200)	19'-9" (6020)	#4 (#13)	2	-	19'-3 3/8" (5875)	#4 (#13)	4	8" (200)	VARIES 89 5/8" (2275) TO 179 3/16" (4550)	#4 (#13)	30	8" (200)	VARIES 40" (1015) TO 85 3/4" (2180)
21" (525) OR 24" (600)	#4 (#13)	2	-	72" (1830)	#4 (#13)	5	8" (200)	24'-3" (7390)	#4 (#13)	2	-	23'-9 5/8" (7255)	#4 (#13)	6	8" (200)	VARIES 80 3/4" (2050) TO 242 1/8" (6150)	#4 (#13)	37	8" (200)	VARIES 40" (1015) TO 96 9/16" (2455)

DELAWARE
DEPARTMENT OF TRANSPORTATION

10:1 SAFETY END STRUCTURE

STANDARD NO. D-2 (2001) SHT. 2 OF 2

APPROVED [signature] CHIEF ENGINEER DATE 6/18/01

RECOMMENDED [signature] DESIGN ENGINEER DATE 6/15/01

04/17/2001

SCALE : N.T.S.

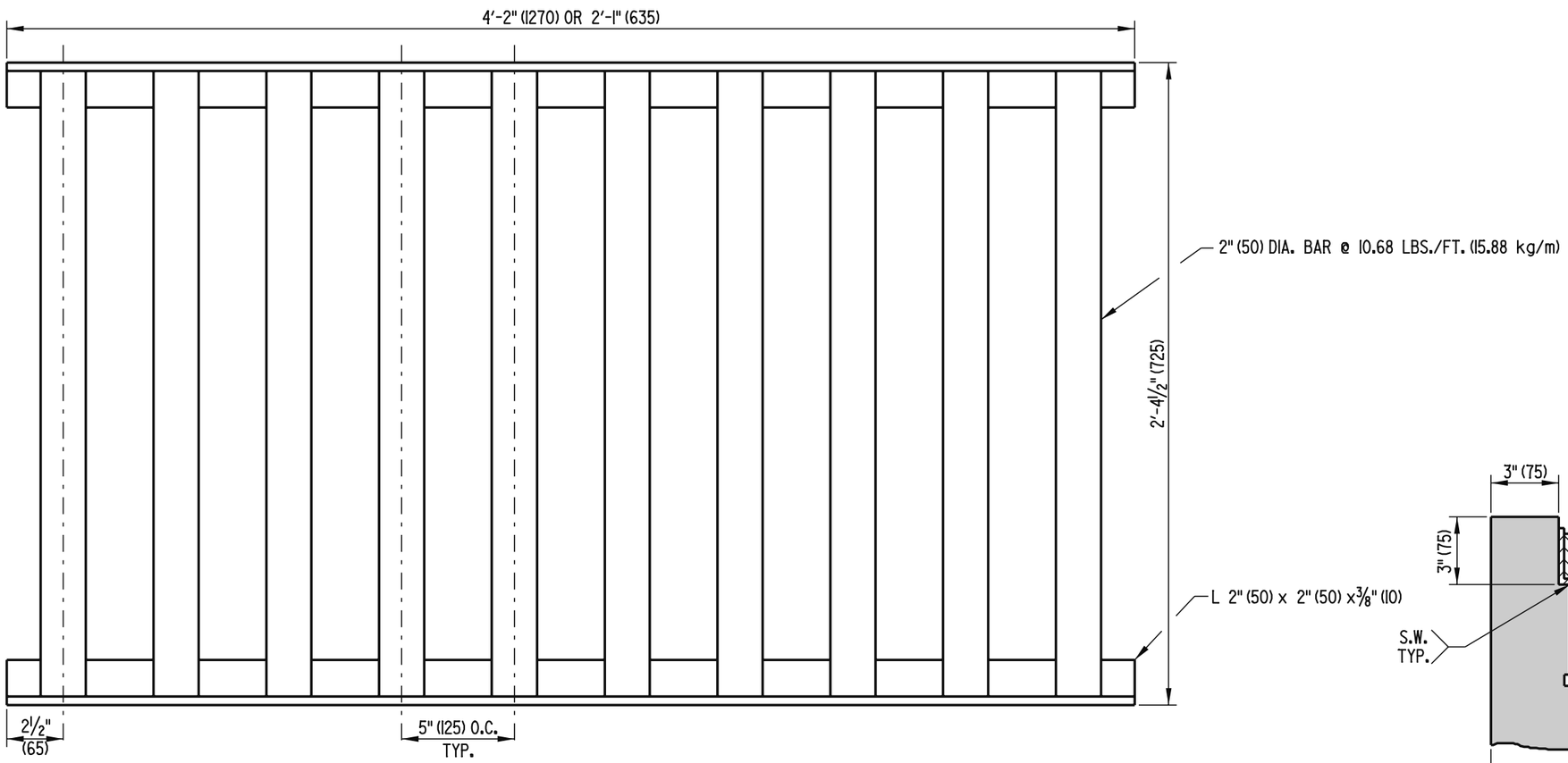

GRATE DETAIL

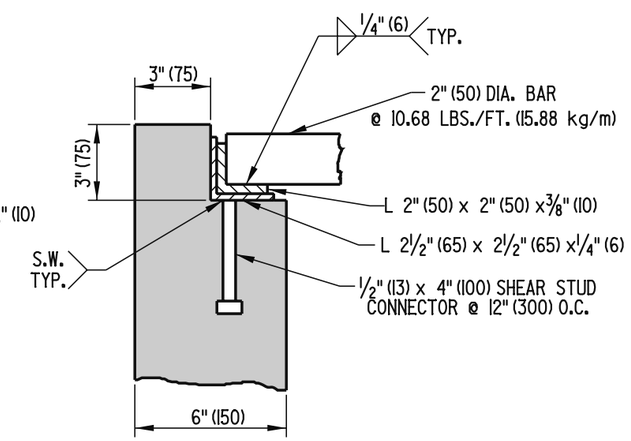

FRAME & GRATE ASSEMBLY DETAIL

DELAWARE DEPARTMENT OF TRANSPORTATION	SAFETY GRATES		APPROVED Carolann Wicks CHIEF ENGINEER — DATE 12/5/05
	STANDARD NO. D-3 (2005)	SHT. 1 OF 2	RECOMMENDED [illegible] DESIGN ENGINEER — DATE 11/29/05

11/23/2005

SCALE : N.T.S.

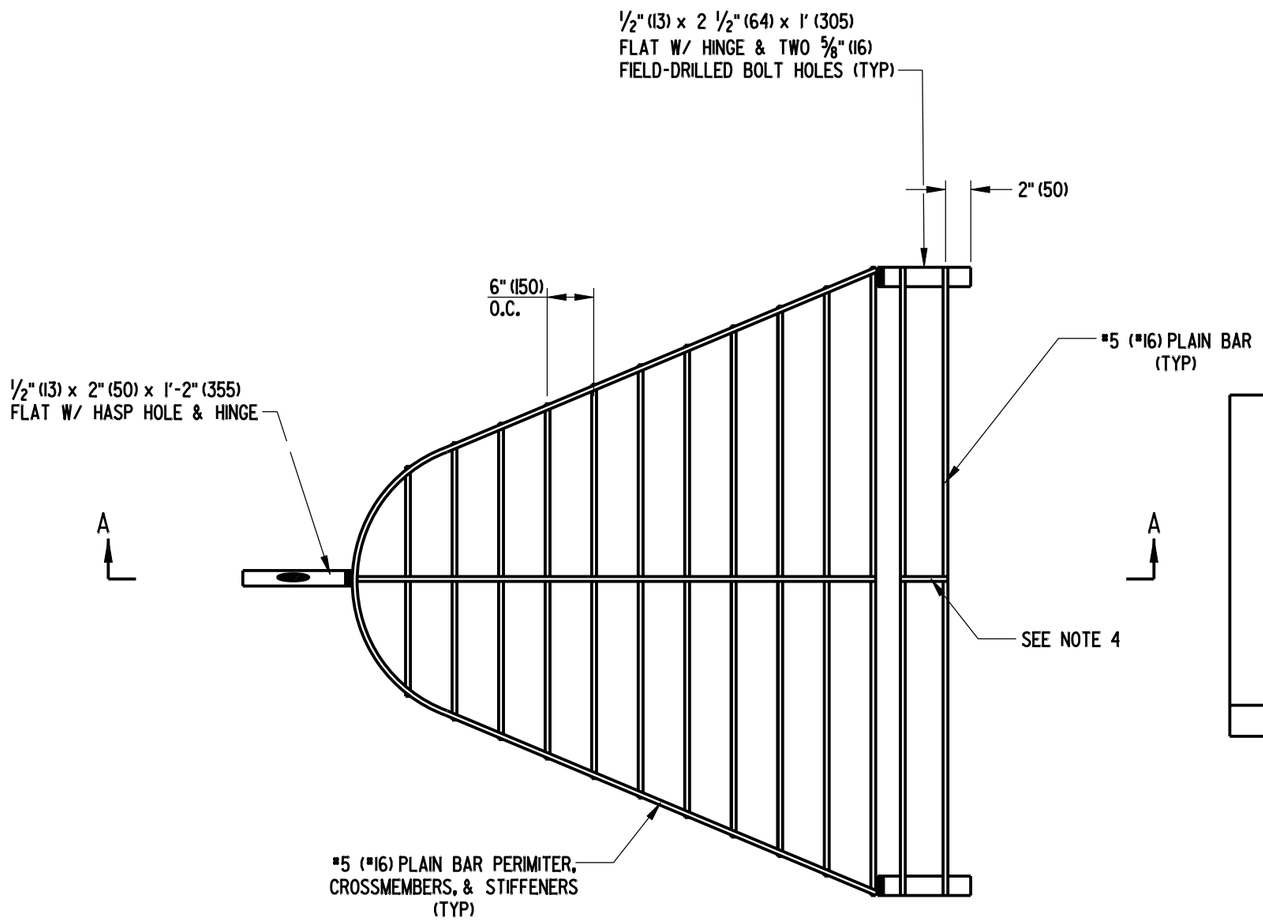

PLAN VIEW

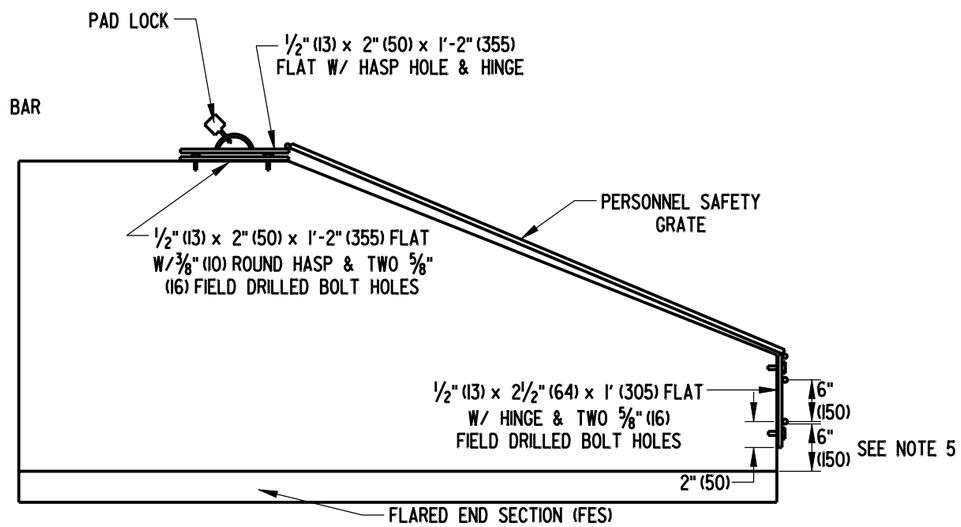

SECTION A-A

NOTES:

1). PERSONNEL SAFETY GRATES (PSG) SHALL ONLY BE INSTALLED ON THE INLETS OF STORM WATER PIPES 12" (300) OR LARGER IN DIAMETER THAT ARE NOT STRAIGHT FROM THE INLET TO THE OPEN OUTLET, REGARDLESS OF THE LENGTH.
2). THE GRATE SHALL BE MADE TO FIT THE OUTSIDE PERIMETER OF THE FLARED END SECTION (FES) ± 1/2" (13).
3). ALL BOLT HOLES ARE TO BE DRILLED IN THE FIELD.
4). A STIFFENER IS TO BE INSTALLED WHERE TWO OR MORE BARS ARE USED.
5). BOTTOM BAR SHALL BE 6" (150) ABOVE INVERT OF FES.
6). ALL HARDWARE ATTACHED TO CONCRETE SHALL BE ATTACHED USING APPROVED TAMPER PROOF ANCHORS.

DELAWARE DEPARTMENT OF TRANSPORTATION	SAFETY GRATES		APPROVED CHIEF ENGINEER 10/24/07 DATE
	STANDARD NO. D-3 (2007)	SHT. 2 OF 2	RECOMMENDED DESIGN ENGINEER 10/23/07 DATE

08/01/2007

SCALE : N.T.S.

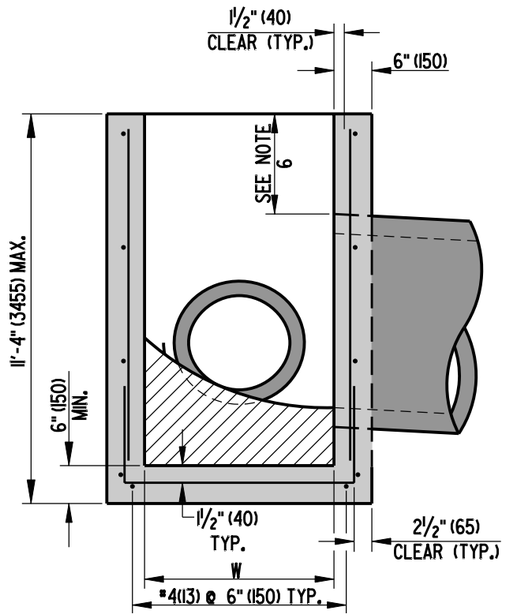

SECTION A-A

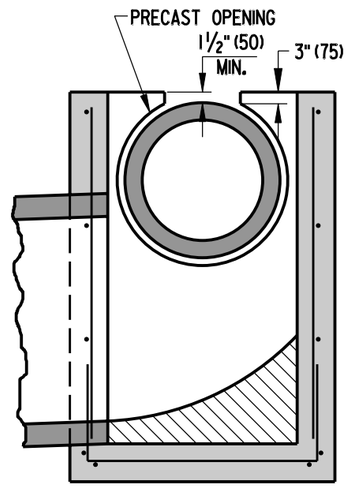

OPTIONAL PIPE OPENING DETAIL

SEE NOTE 6

INLET BOX SCHEDULE		
L	W	FABRICATION TOLERANCE
34" (865)	18" (455)	-1" (25)
34" (865)	24" (610)	-1" (25)
48" (1220)	30" (760)	+6" (150)
48" (1220)	48" (1220)	+6" (150)
66" (1675)	30" (760)	+6" (150)
66" (1675)	48" (1220)	+6" (150)
66" (1675)	66" (1675)	+6" (150)
72" (1830)	24" (610)	-1" (25)
72" (1830)	48" (1220)	-1" (25)
72" (1830)	72" (1830)	-1" (25)

WALL REINFORCEMENT SCHEDULE		
INTERIOR WALL DIMENSION	AREA OF HORIZONTAL REINFORCEMENT PER FOOT (mm^2)	AREA OF VERTICAL REINFORCEMENT PER FOOT (mm^2)
	IN^2 (mm^2)	IN^2 (mm^2)
LESS THAN 4' (1220)	0.132 (85)	0.132 (85)
4' (1220) TO 4.5' (1370)	0.163 (105)	0.132 (85)
4.5' (1370) TO 5' (1525)	0.198 (128)	0.132 (85)
5' (1525) TO 5.5' (1675)	0.239 (154)	0.132 (85)
5.5' (1675) TO 6' (1830)	0.284 (183)	0.132 (85)

NOTES:

1). INLET BOXES SHALL BE PRE-CAST OR CAST-IN-PLACE.
2). PIPES SHALL NOT BE INSTALLED THROUGH ANY CORNER OF THE INLET BOX.
3). RISER SECTIONS MAY BE USED FOR DEEP INLET BOXES.
4). PIPES MAY BE INSTALLED NEAR OR THROUGH JOINTS FOR RISER SECTIONS.
5). WHEN THE COVER ABOVE THE PIPE IS LESS THAN 4" (100) TO THE COVER SLAB OR TOP UNIT OPENING, THE PORTION OF BOX WALL ABOVE THE PIPE MAY BE REMOVED AS SHOWN IN THE OPTIONAL PIPE OPENING DETAIL. THE AREA ABOVE THE PIPE SHALL THEN BE FORMED AND FILLED WITH HIGH-STRENGTH, NON-SHRINK GROUT MIXED WITH COARSE AGGREGATE IN A 1:1 RATIO BY WEIGHT.
6). CONCRETE FLOW CHANNEL SHALL BE WARPED FOR POSITIVE DRAINAGE.
7). WHEN INLET BOX IS PRECAST, PIPE OPENING SHALL BE BETWEEN 3" (75) AND 4" (100) LARGER THAN OUTSIDE DIAMETER OF PIPE AND SHALL NOT ENCROACH ON ADJACENT WALL.

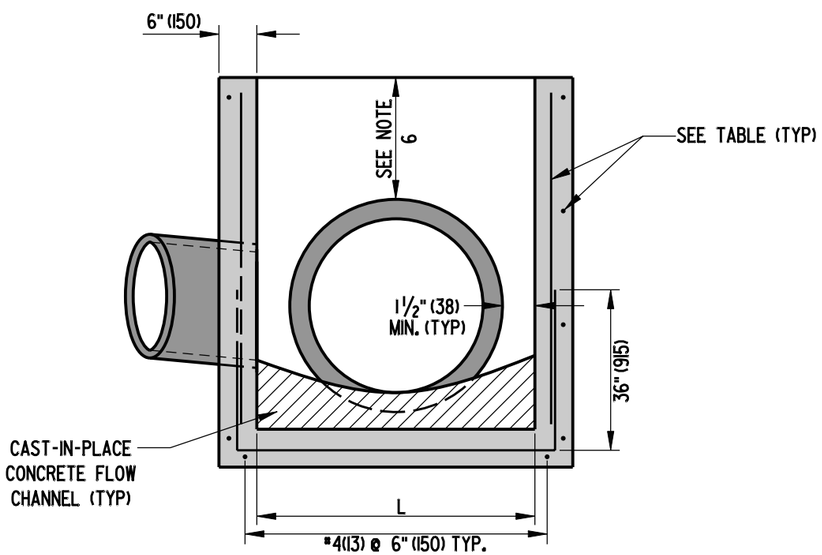

SECTION B-B

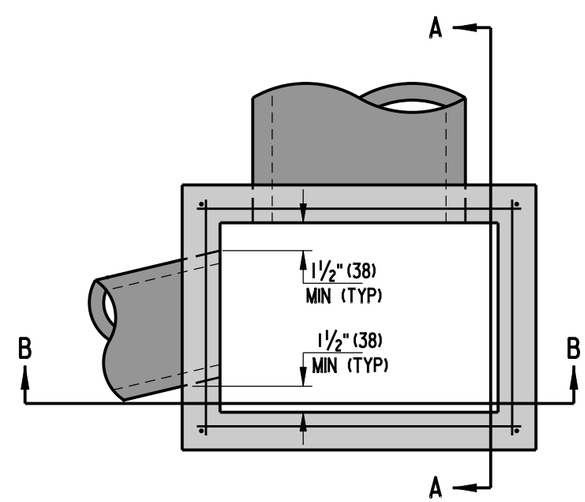

TOP VIEW

DELAWARE DEPARTMENT OF TRANSPORTATION	INLET BOX DETAILS		APPROVED CHIEF ENGINEER 10/24/07 DATE
	STANDARD NO. D-4 (2007)	SHT. 1 OF 1	RECOMMENDED DESIGN ENGINEER 10/23/07 DATE

09/18/2007

SCALE : N.T.S.

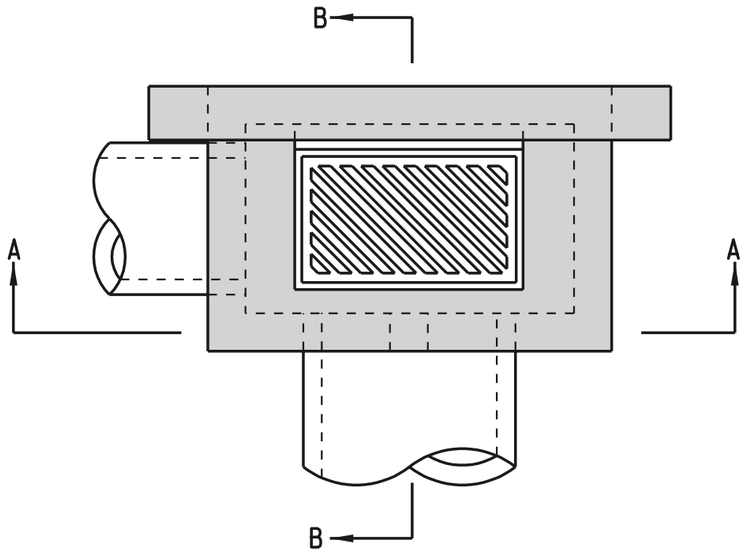

PLAN

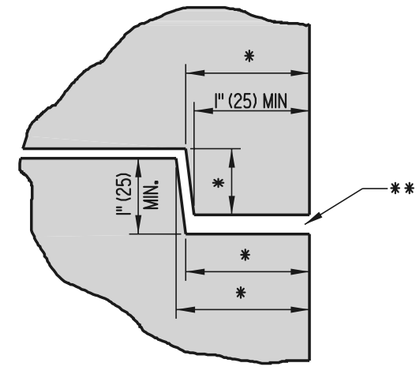

TYPE 1 JOINT DETAIL

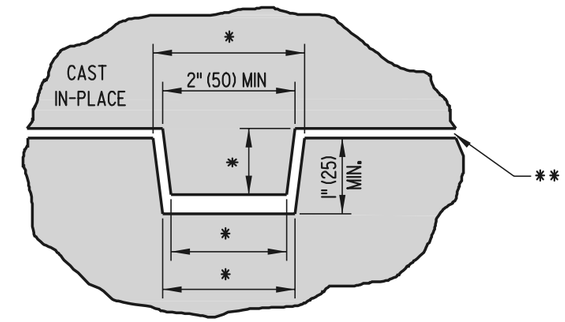

TYPE 2 JOINT DETAIL

* DIMENSIONS WILL VARY

** JOINT SEALANT AS PER SPECIFICATIONS

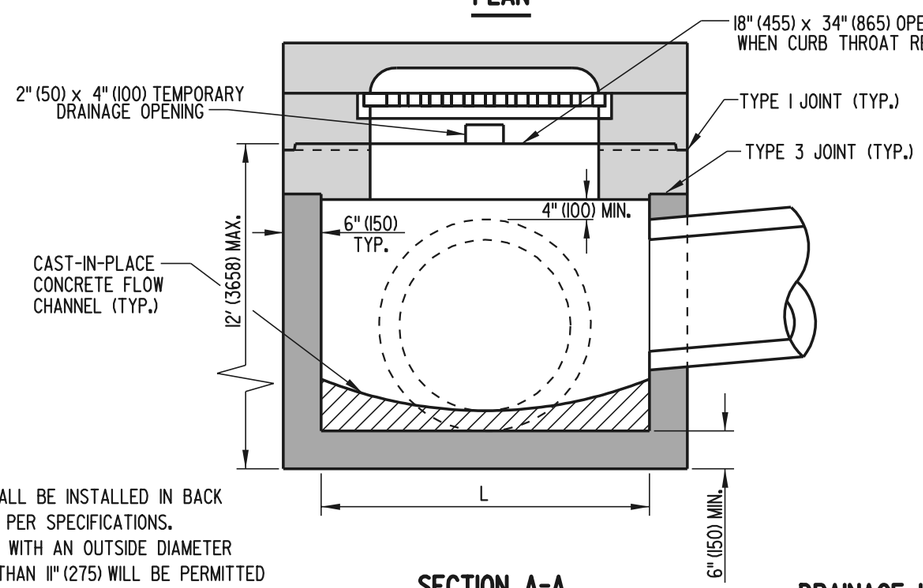

SECTION A-A

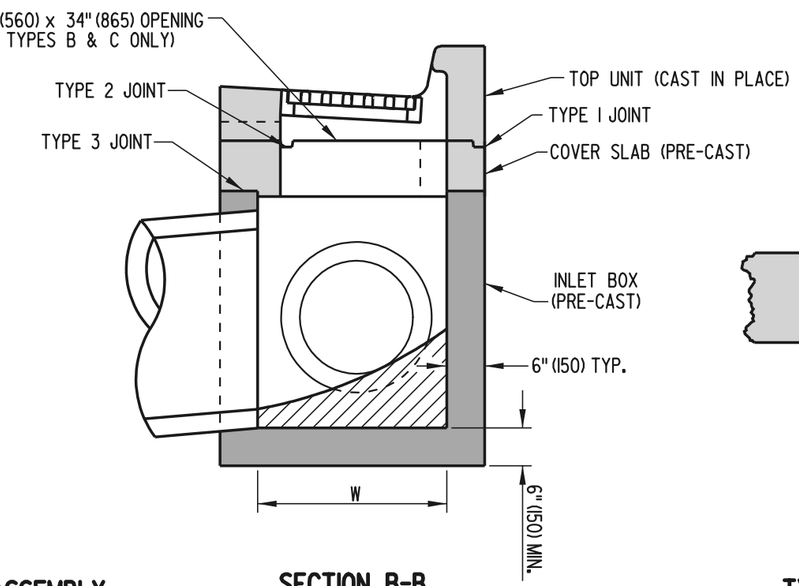

SECTION B-B

DRAINAGE INLET ASSEMBLY

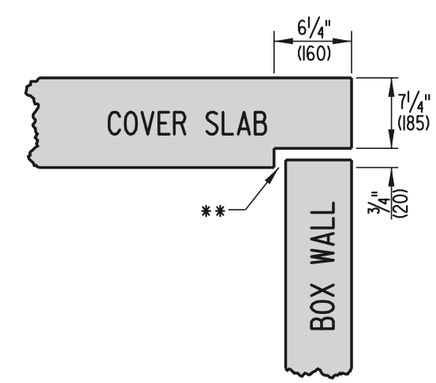

TYPE 3 JOINT DETAIL

NOTES:

1.) STEPS SHALL BE INSTALLED IN BACK WALL AS PER SPECIFICATIONS.

2.) NO PIPES WITH AN OUTSIDE DIAMETER LARGER THAN 11" (275) WILL BE PERMITTED TO ENTER THE BACK WALL OF A DRAINAGE INLET, IF IT IMPEDES THE INSTALLATION OF STEPS IN THE BACK WALL.

3.) IF NECESSARY, A LARGER BOX MAY BE USED IN ORDER TO FIT THE STEPS AND A LARGER PIPE IN THE BACK WALL.

DELAWARE DEPARTMENT OF TRANSPORTATION	DRAINAGE INLET DETAILS		APPROVED Carolann Wicks (CHIEF ENGINEER) 9/6/02 (DATE)
	STANDARD NO. D-5 (2002)	SHT. 1 OF 8	RECOMMENDED (DESIGN ENGINEER) 8/19/02 (DATE)

05/02/2002

DRAINAGE INLET FRAME AND GRATES

SCALE : N.T.S.

TYPE 1

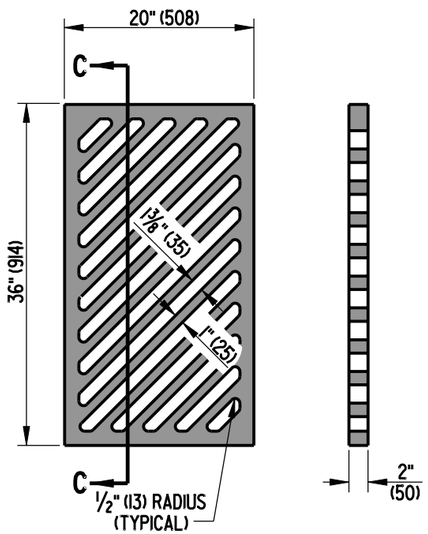

PLAN

SECTION C-C

TYPE 2

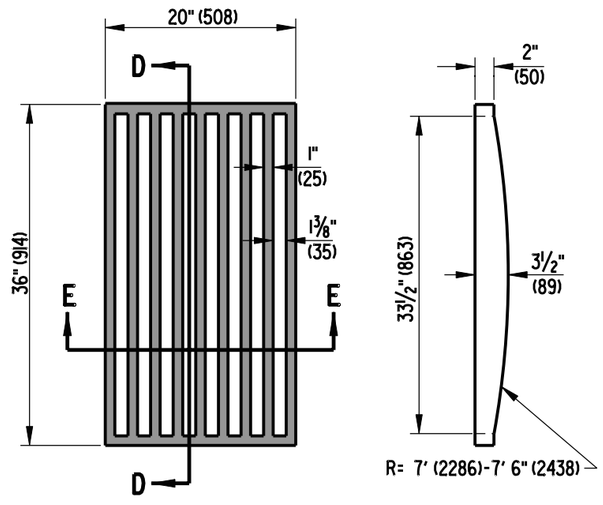

PLAN

SECTION D-D

TYPE 3

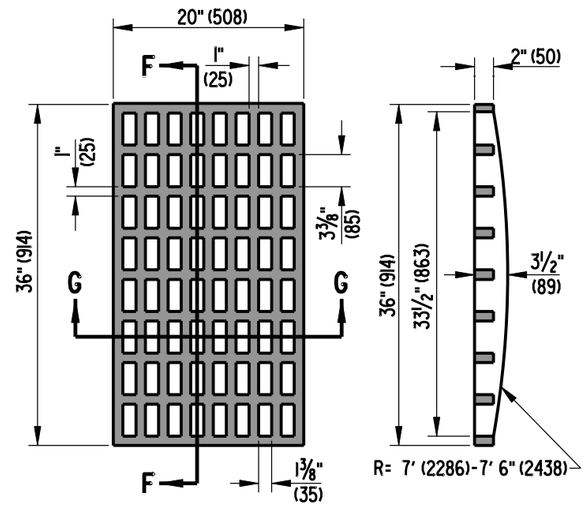

PLAN

SECTION F-F

TYPE 4

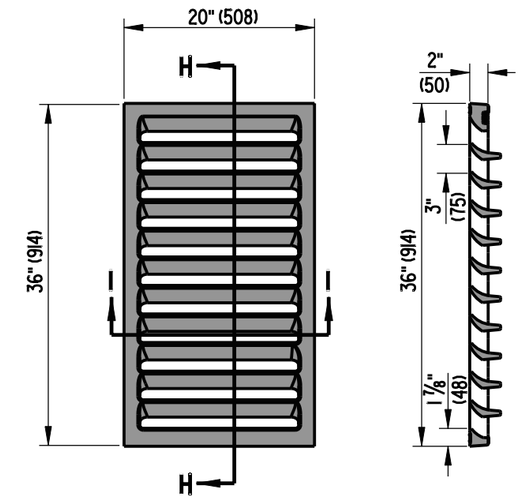

PLAN

SECTION H-H

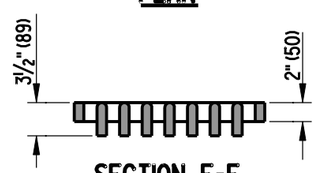

SECTION E-E

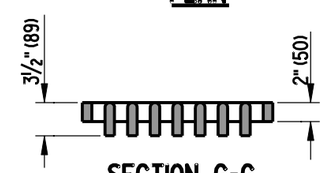

SECTION G-G

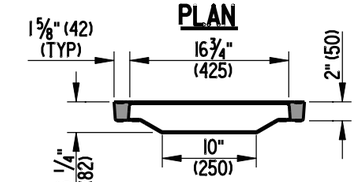

SECTION I-I

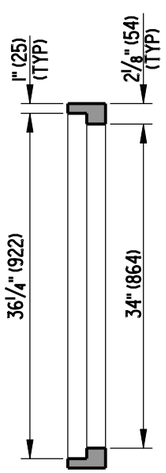

SECTION B-B

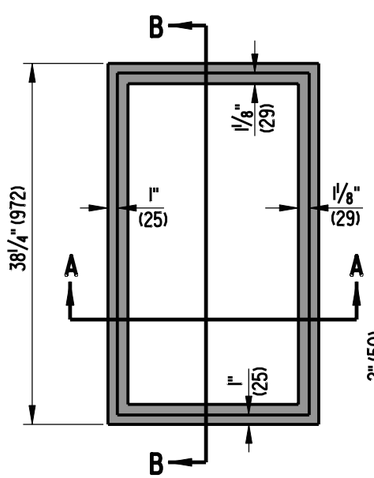

DRAINAGE INLET FRAME

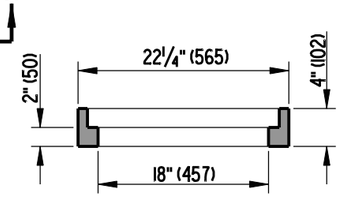

SECTION A-A

NOTES:

1). THE TYPE 2 DRAINAGE INLET GRATE SHALL NOT BE INSTALLED WHERE BICYCLE TRAFFIC MAY BE PRESENT.

2). THE TOP OF ALL DRAINAGE INLET GRATES SHALL BE LABELED "ONLY RAIN DOWN THE STORM DRAIN". ALSO, DRAINAGE INLET GRATES TYPE I AND TYPE 4 SHALL BE LABELED WITH "WATER FLOW" AND AN ARROW INDICATING FLOW DIRECTION AS SHOWN IN THE EXAMPLE DETAIL.

3). THE TYPE I DRAINAGE INLET GRATE SHALL BE LABELED WITH "CURBSIDE" AS SHOWN ON THE EXAMPLE DETAIL. ALL LABELING ON THE TYPE I SHALL BE ON BOTH TOP AND BOTTOM SIDES DUE TO THE TYPE I BEING REVERSIBLE.

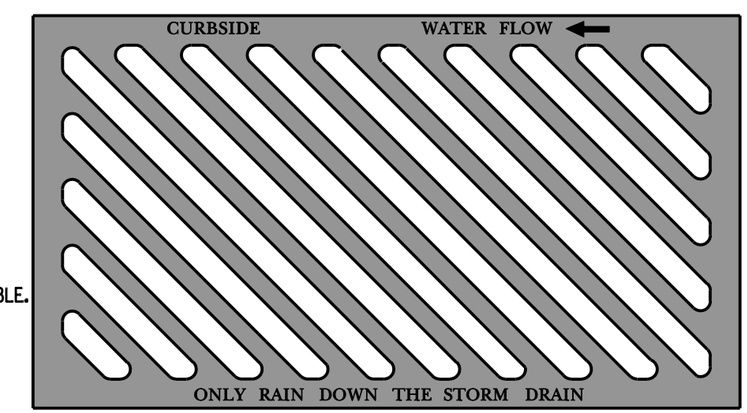

DRAINAGE GRATE LABELING EXAMPLE DETAIL

DELAWARE DEPARTMENT OF TRANSPORTATION	DRAINAGE INLET DETAILS		APPROVED CHIEF ENGINEER 10/24/07 DATE
	STANDARD NO. D-5 (2007)	SHT. 2 OF 9	RECOMMENDED DESIGN ENGINEER 10/23/07 DATE

10/12/2007

SCALE : N.T.S.

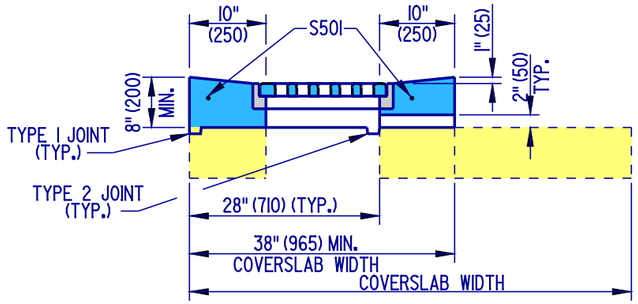

TYPE A

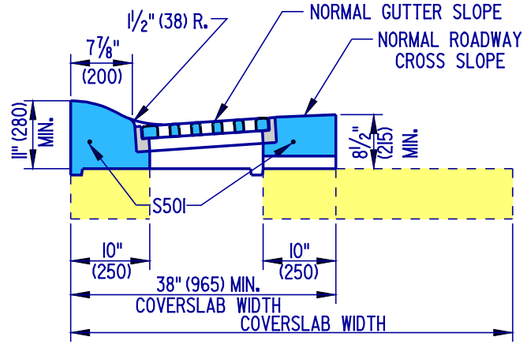

TYPE D

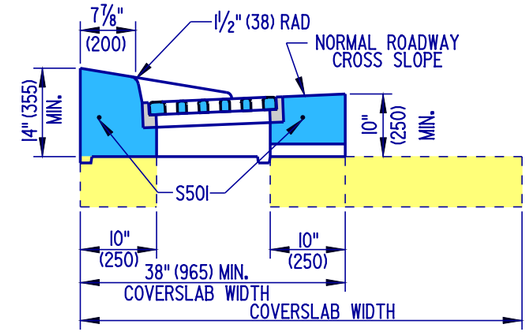

TYPE E

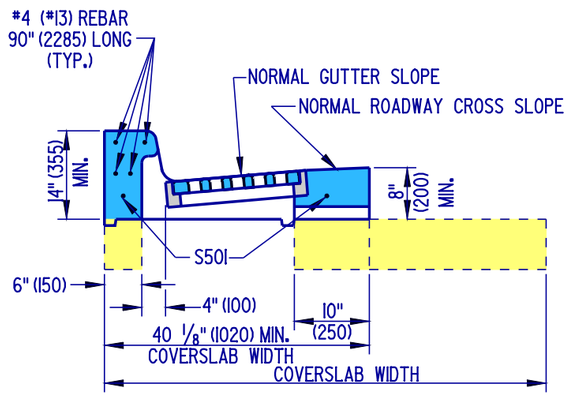

TYPE B

INLET TOP UNIT APPLICATIONS	
TOP UNIT	CURB
TYPE A	USE IN DRAINAGE SWALE
TYPE B	INTEGRAL PCC CURB & GUTTER, TYPE 1 & 3, PCC CURB TYPE 1
TYPE C	INTEGRAL PCC CURB & GUTTER, TYPE 4, PCC CURB TYPE 3
TYPE D	INTEGRAL PCC CURB & GUTTER, TYPE 2
TYPE E	PCC CURB TYPE 2

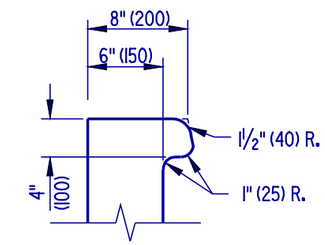

CURB OPENING DETAIL

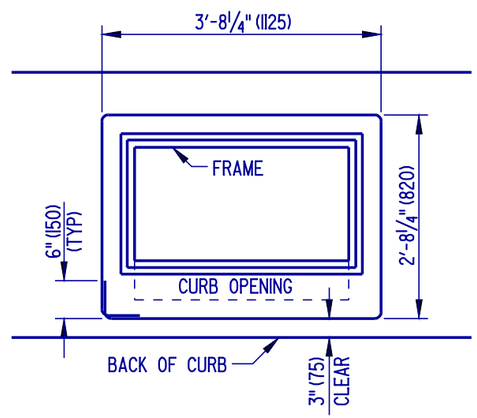

S501 BENDING DIAGRAM

S501 IS NOT REQUIRED TO BE ONE CONTINUOUS BAR. IF MORE THAN ONE BAR IS USED, THERE MUST BE A 12" (300) OVERLAP BETWEEN BARS.

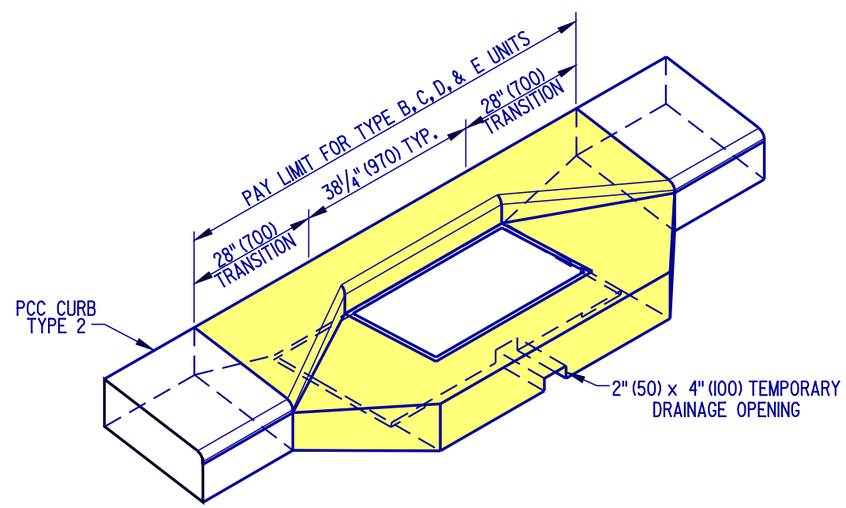

ISOMETRIC VIEW

TYPE E UNIT SHOWN

DRAINAGE INLET TOP UNITS

NOTE: TOP UNIT IS TO BE CAST-IN-PLACE TO GRADE AS SPECIFIED ON PLAN SHEETS OR AS DIRECTED BY ENGINEER.

DELAWARE DEPARTMENT OF TRANSPORTATION	DRAINAGE INLET DETAILS		APPROVED Carolann Wicks CHIEF ENGINEER 1/10/05 DATE
	STANDARD NO. D-5 (2004)	SHT. 3 OF 8	RECOMMENDED Dennis M. Office DESIGN ENGINEER 1/3/05 DATE

09/27/2004

NOTE :
1. 4" (100) THROAT IS FOR TYPES B AND C TOP UNITS ONLY.
2. RELOCATE ENCROACHING REINFORCING BARS WHEN USING TYPES B & C TOP UNITS.
3. COVER SLABS SHALL BE PRE-CAST AND MUST BE SIZED TO FIT INLET BOX DIMENSIONS.
4. ALL BARS ARE TO BE #5 (#16) SPACED @ 6" (150)± UNLESS NOTED OTHERWISE.
5. MINIMUM BAR COVER = 1½" (38).

* - DIMENSIONS TO MATCH OUTSIDE TO OUTSIDE DIMENSIONS OF BOX

SCALE : N.T.S.

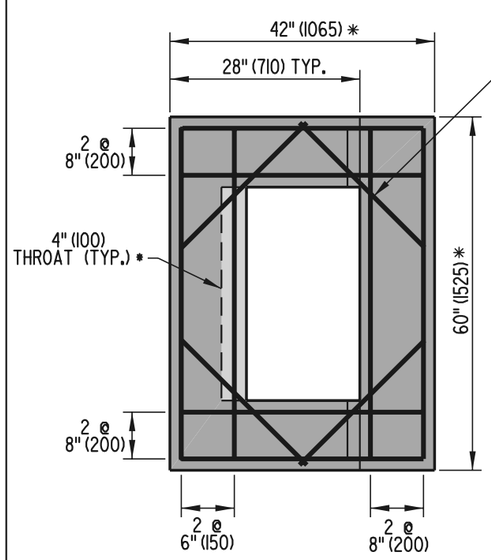

48" (1220) x 30" (760) INLET

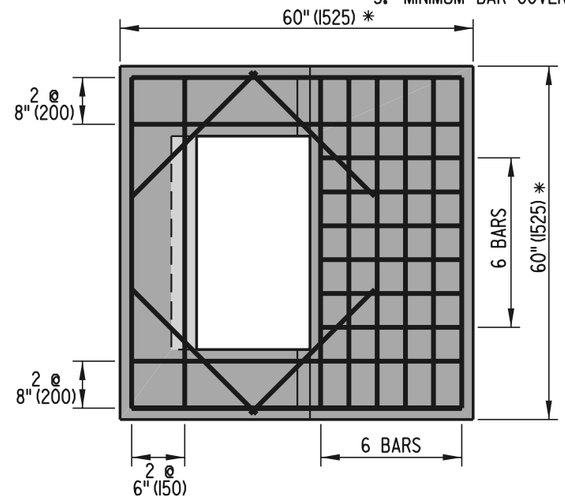

48" (1220) x 48" (1220) INLET

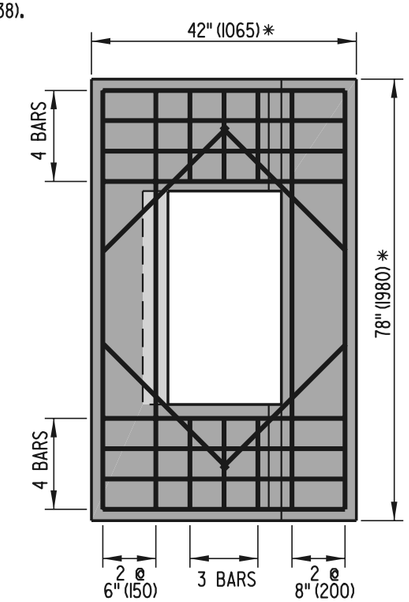

66" (1675) x 30" (760) INLET

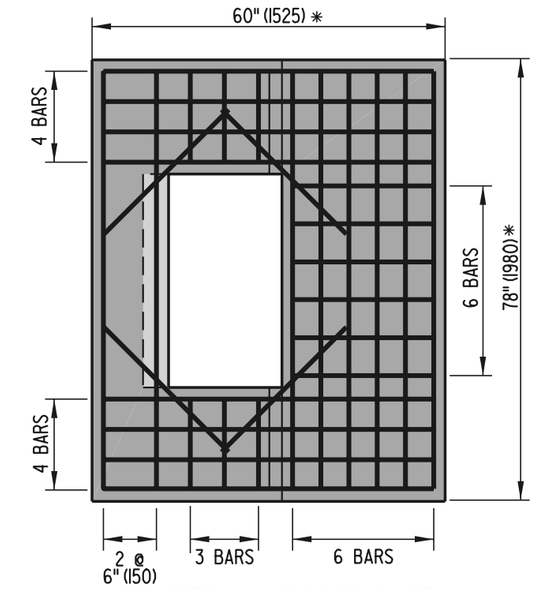

66" (1675) x 48" (1220) INLET

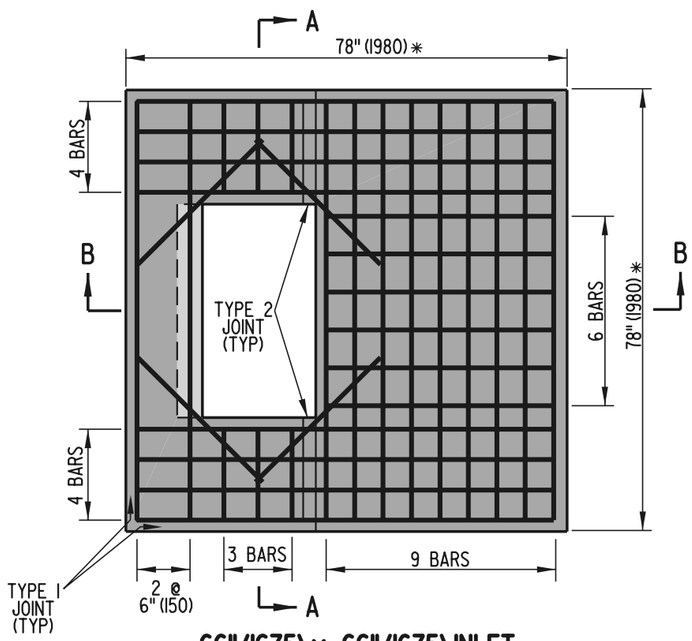

66" (1675) x 66" (1675) INLET

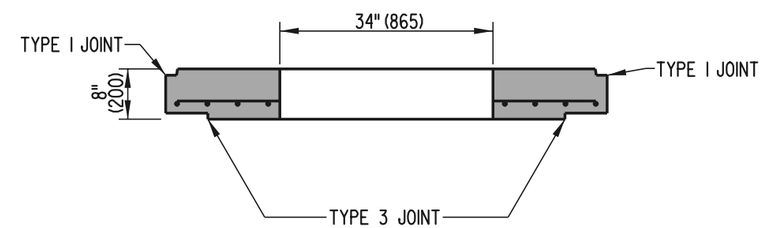

SECTION A-A

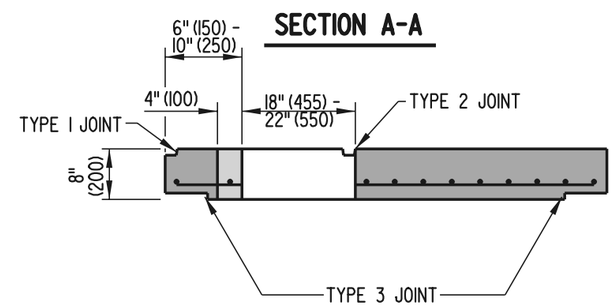

SECTON B-B

DRAINAGE INLET COVER SLAB DETAILS

DELAWARE DEPARTMENT OF TRANSPORTATION	DRAINAGE INLET DETAILS		APPROVED Carolann Wicks (CHIEF ENGINEER) 9/6/02 (DATE)
	STANDARD NO. D-5 (2002)	SHT. 4 OF 8	RECOMMENDED (DESIGN ENGINEER) 8/19/02 (DATE)

04/29/2002

SCALE : N.T.S.

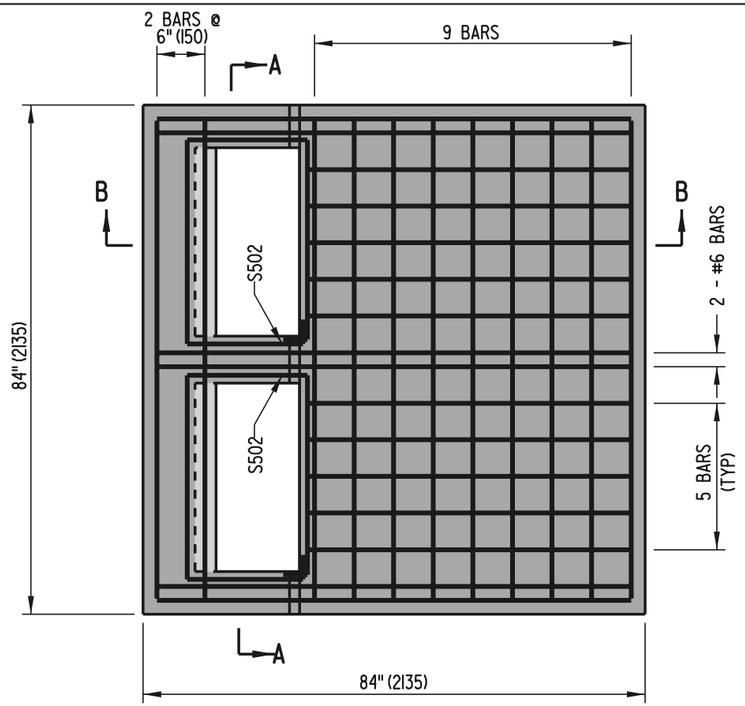

72" (1830) x 72" (1830) INLET

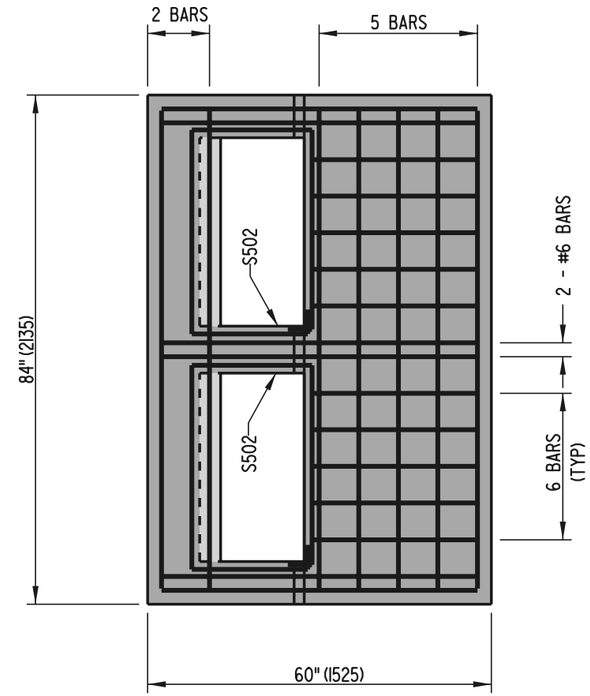

72" (1830) x 48" (1220) INLET

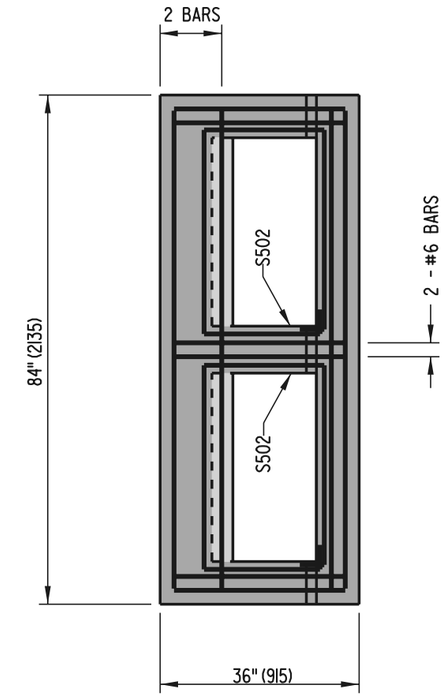

72" (1830) x 24" (610) INLET

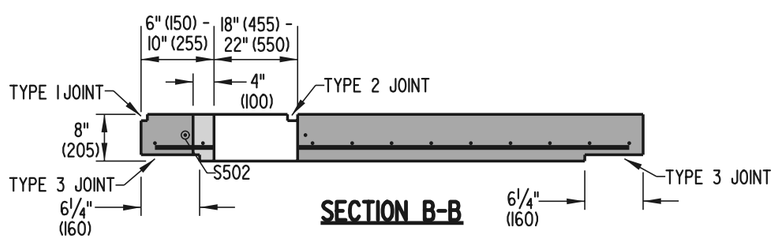

SECTION B-B

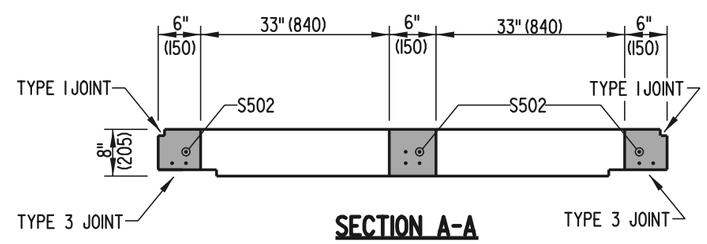

SECTION A-A

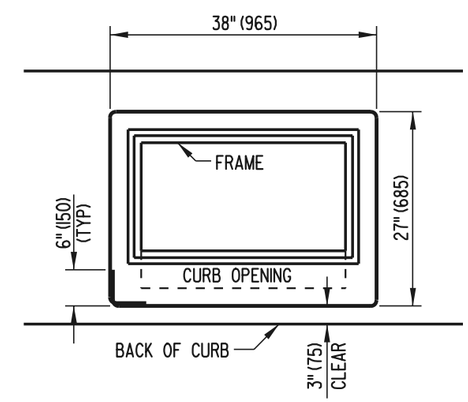

S502 BENDING DIAGRAM

S502 IS NOT REQUIRED TO BE ONE CONTINUOUS BAR. IF MORE THAN ONE BAR IS USED, THERE MUST BE A 12" (300) OVERLAP BETWEEN BARS.

NOTE :
1. 4" (100) THROAT IS FOR TYPES B AND C TOP UNITS ONLY.
2. RELOCATE ENCROACHING REINFORCING BARS WHEN USING TYPES B & C TOP UNITS.
3. COVER SLABS ARE TO BE PRE-CAST AND MUST BE SIZED TO FIT INLET BOX DIMENSIONS.
4. ALL BARS ARE TO BE #5 (#16) SPACED @ 6" (150)± UNLESS NOTED OTHERWISE.
5. MINIMUM BAR COVER = 1½" (38).

DELAWARE DEPARTMENT OF TRANSPORTATION	DOUBLE INLET COVER SLAB DETAILS		APPROVED Carolann Wicks (CHIEF ENGINEER) 9/6/02 (DATE)
	STANDARD NO. D-5 (2002)	SHT. 5 OF 8	RECOMMENDED (DESIGN ENGINEER) 8/19/02 (DATE)

06/11/2002

SCALE : N.T.S.

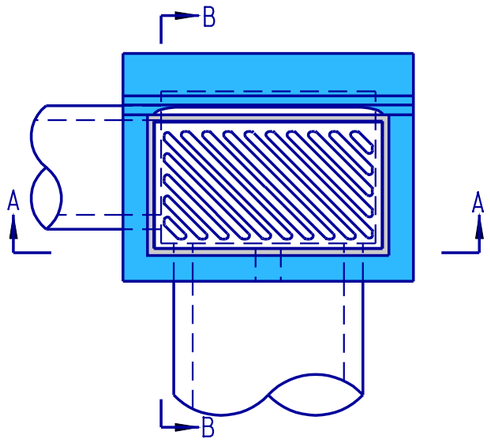

TOP VIEW

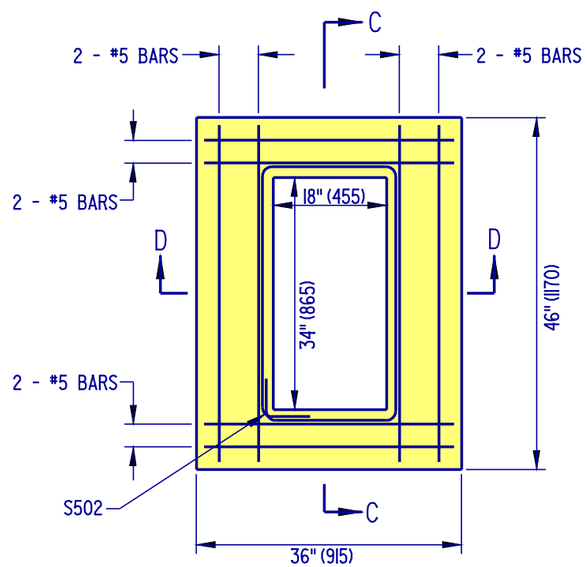

PLAN

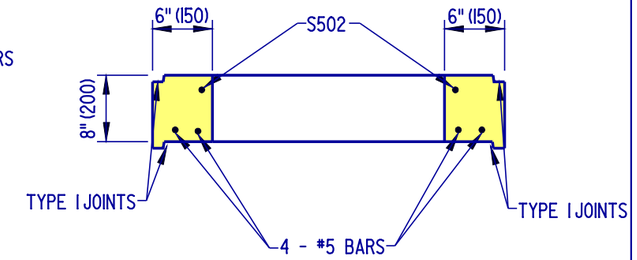

SECTION C-C

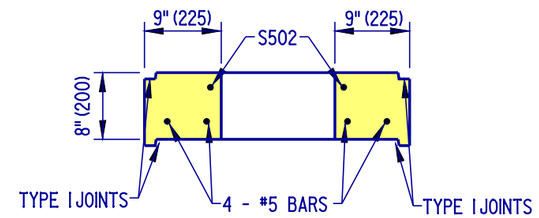

SECTION D-D

COVER SLAB DETAILS

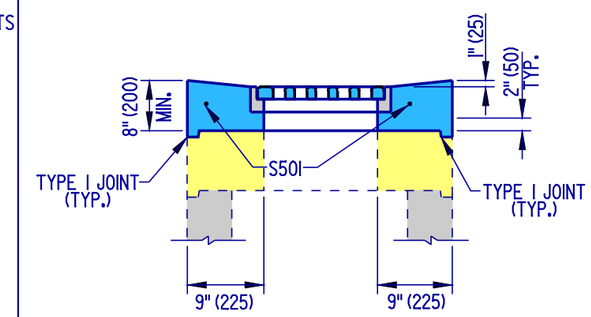

TYPE A

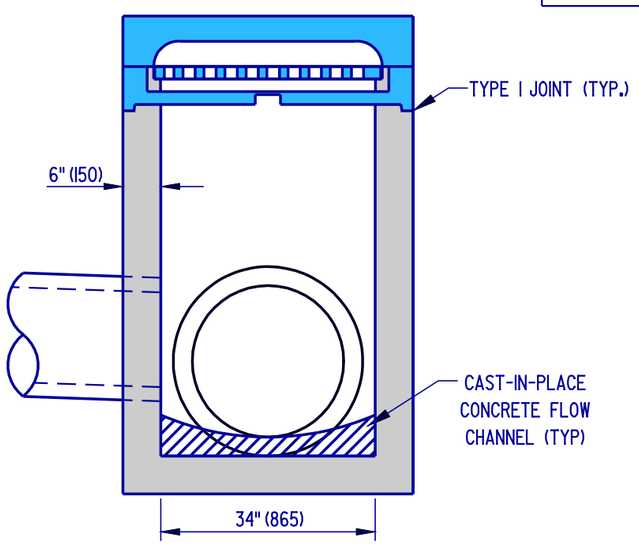

SECTION A-A

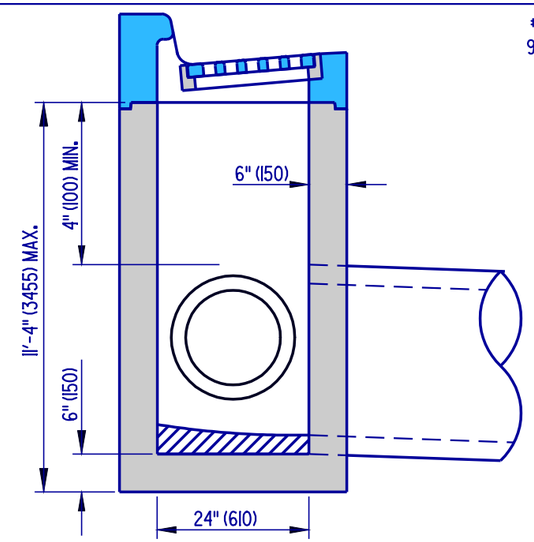

SECTION B-B

34" (865) x 24" (610) DRAINAGE INLET DETAILS

NOTE: REFER TO PREVIOUS SHEETS FOR REINFORCING REQUIREMENTS

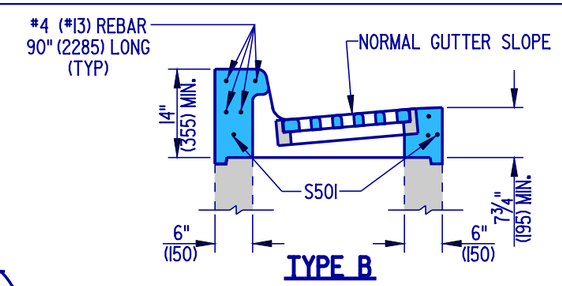

TYPE B

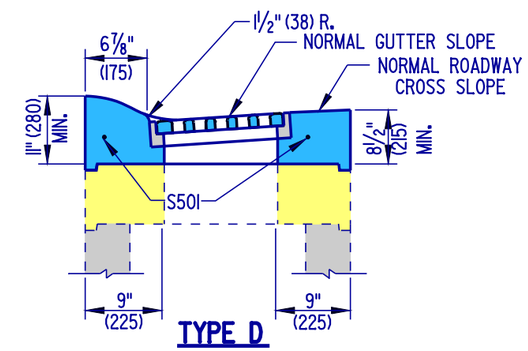

TYPE D

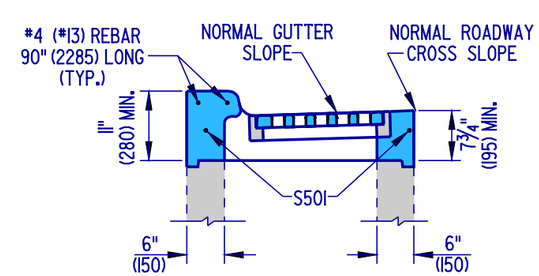

TYPE C

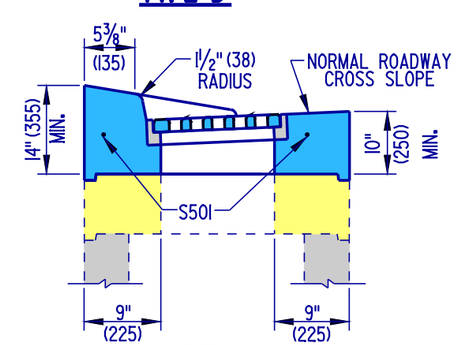

TYPE E

TOP UNIT DETAILS

DELAWARE DEPARTMENT OF TRANSPORTATION	DRAINAGE INLET DETAILS		APPROVED Carolann Wicks CHIEF ENGINEER 1/10/05 DATE
	STANDARD NO. D-5 (2004)	SHT. 6 OF 8	RECOMMENDED Dennis M. Office DESIGN ENGINEER 1/3/05 DATE

09/27/2004

SCALE : N.T.S.

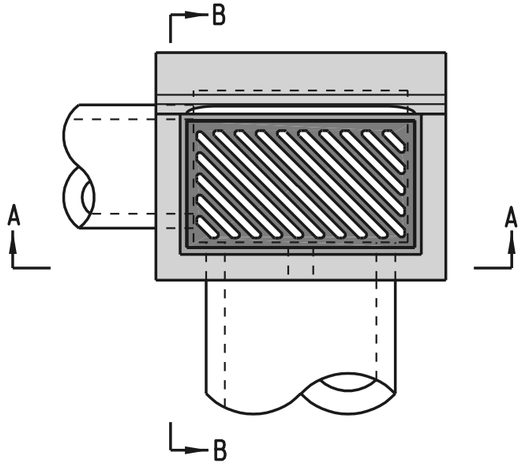

TOP VIEW

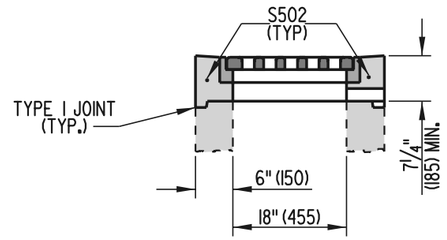

TYPE A

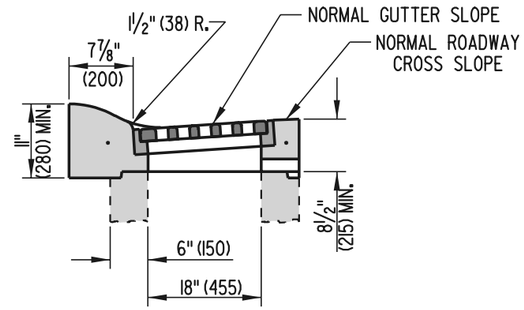

TYPE D

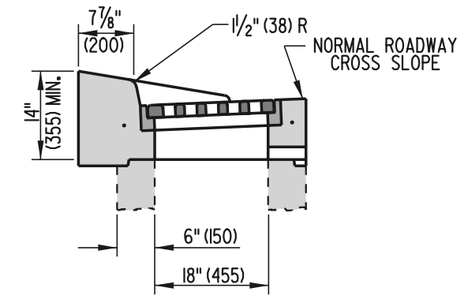

TYPE E

TOP UNIT DETAILS

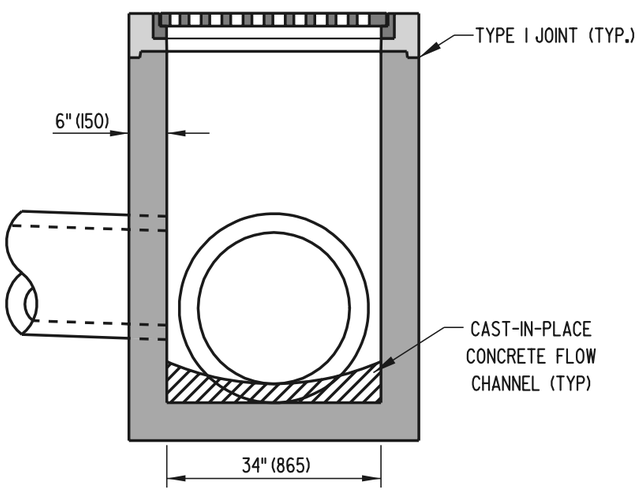

SECTION A-A

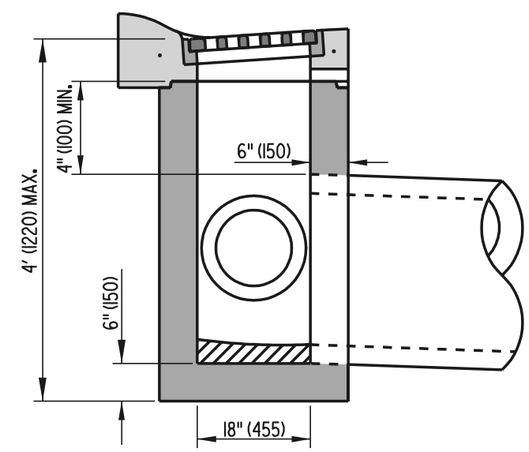

SECTION B-B

34" (865) x 18" (455) DRAINAGE INLET DETAILS

NOTES:
1.) REFER TO PREVIOUS SHEETS FOR REINFORCEMENT REQUIREMENTS
2.) THE HEIGHT OF THIS INLET IS LIMITED TO 4' (1220) MAXIMUM, THEREFORE STEPS WILL NOT BE REQUIRED AND SHOULD NOT BE INSTALLED ON THIS INLET.

DELAWARE DEPARTMENT OF TRANSPORTATION	DRAINAGE INLET DETAILS		APPROVED Carolann Wicks (CHIEF ENGINEER) 9/6/02 (DATE)
	STANDARD NO. D-5 (2002)	SHT. 7 OF 8	RECOMMENDED (DESIGN ENGINEER) 8/19/02 (DATE)

07/31/2002

SCALE : N.T.S.

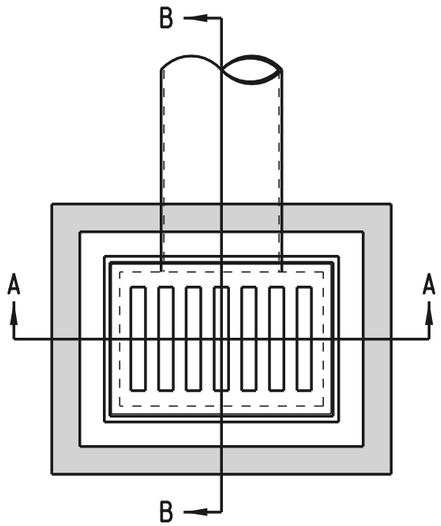

NOTE: 1. REINFORCEMENT SHALL BE 4" (102) X 4" (102) W4 X W4 (W26 X W26)
2. INLET BOXES ARE TO BE PRE-CAST OR CAST-IN-PLACE.

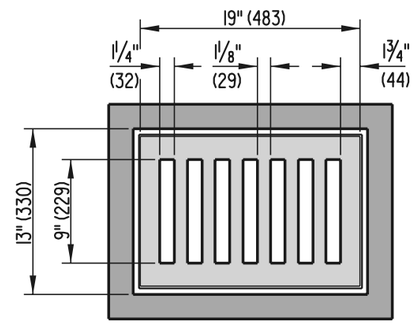

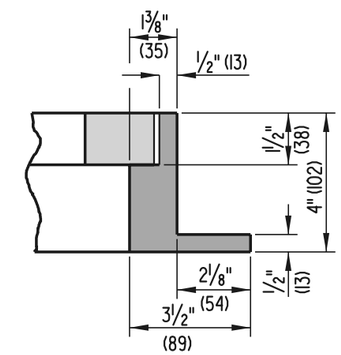

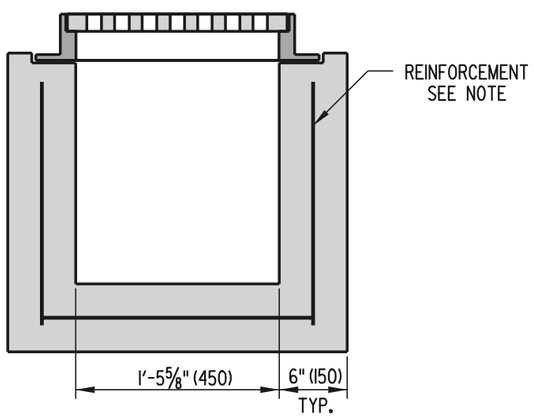

SECTION A-A

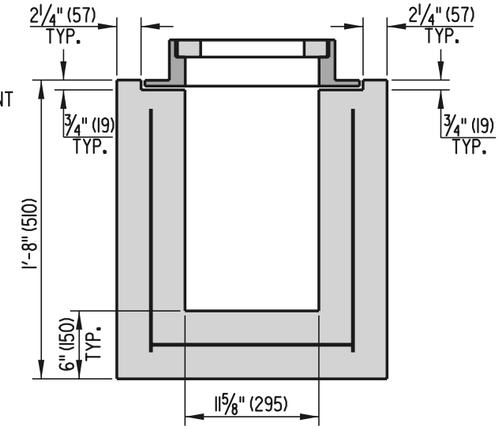

SECTION B-B

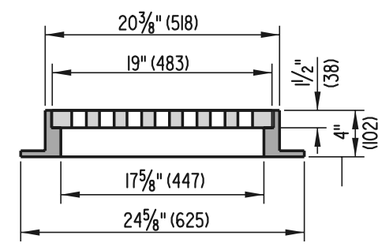

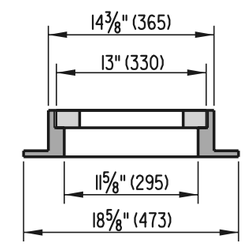

DELAWARE DEPARTMENT OF TRANSPORTATION	LAWN INLET		APPROVED Carolann Wicks (CHIEF ENGINEER) 9/6/02 (DATE)
	STANDARD NO. D-5 (2002)	SHT. 8 OF 8	RECOMMENDED (DESIGN ENGINEER) 8/19/02 (DATE)

05/02/2002

SCALE : N.T.S.

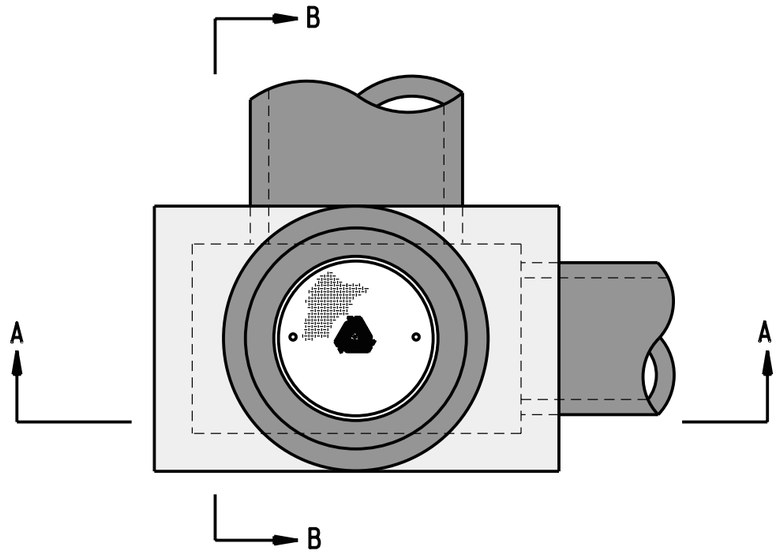

PLAN

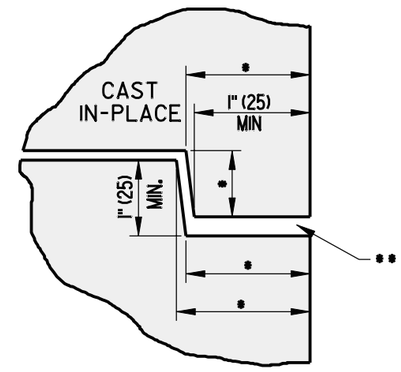

TYPE 1 JOINT DETAIL

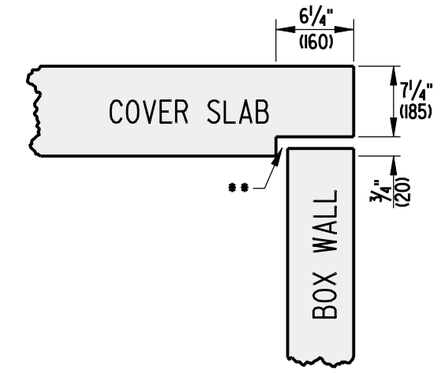

TYPE 3 JOINT DETAIL

* DIMENSIONS MAY VARY
** JOINT SEALANT AS PER SPECIFICATIONS ONLY BETWEEN 2 PRECAST UNITS

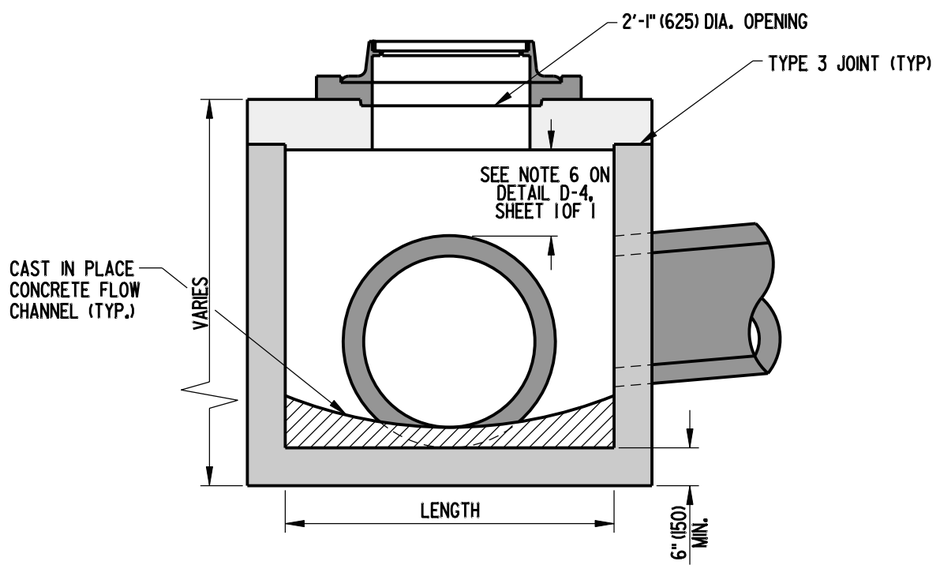

SECTION A-A

* - SEE OPTIONAL PIPE OPENING DETAIL ON STANDARD D-4, SHEET 1OF 1.

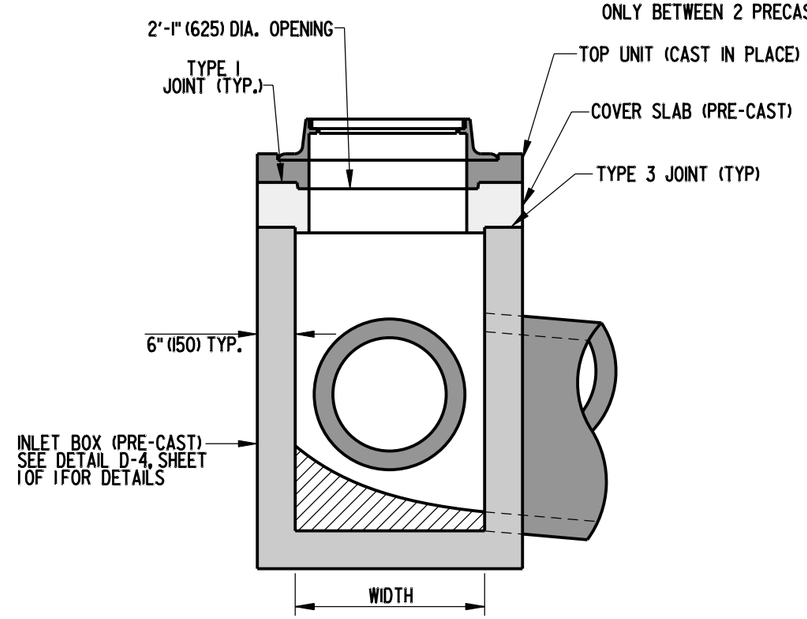

SECTION B-B

BOX MANHOLE ASSEMBLY

DELAWARE DEPARTMENT OF TRANSPORTATION	MANHOLE DETAILS		APPROVED CHIEF ENGINEER 10/24/07 DATE
	STANDARD NO. D-6 (2007)	SHT. 1 OF 4	RECOMMENDED DESIGN ENGINEER 10/23/07 DATE

09/18/2007