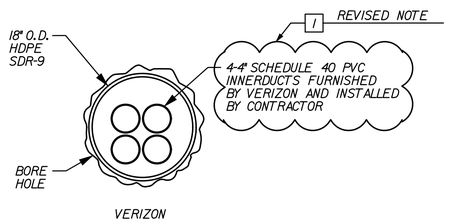

TYPICAL SECTION
STA. 106+00 TO STA. 118+15.76

NOT TO SCALE

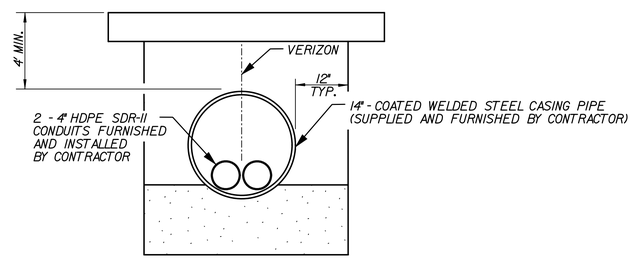

DETAIL UNDER SRI
STA. 100+00 TO STA. 101+31.31

NOT TO SCALE

1 REVISED DETAIL

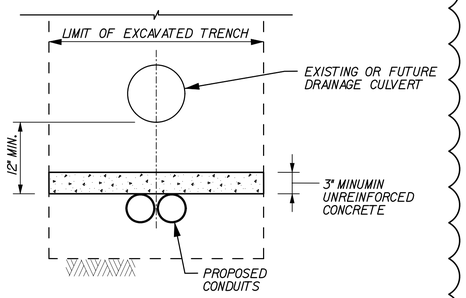

UTILITY CONCRETE SLAB DETAIL

NOT TO SCALE

1 ADDED DETAIL

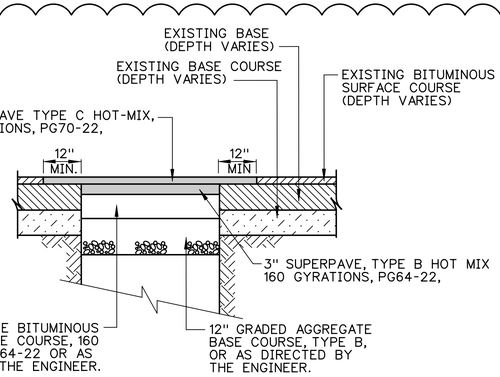

HOT-MIX PAVEMENT PATCH DETAIL

NOT TO SCALE

1 ADDED DETAIL

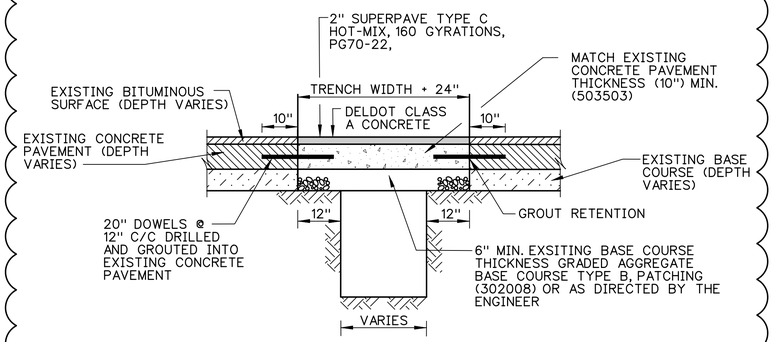

P.C.C. PAVEMENT PATCH DETAIL

NOT TO SCALE

1 ADDED DETAIL

DATE:		DESCRIPTION:	BY:
1-9-05	1	REVISED AND ADDED DETAILS	RK&K

DELAWARE SEASHORE STATE PARK
INDIAN RIVER MARINA RE-DEVELOPMENT
PHASE II - VERIZON PLANS

DELAWARE DEPARTMENT OF NATURAL RESOURCES AND ENVIRONMENTAL CONTROL

DESIGNED BY: RK&K
DRAWN BY: RK&K
BUILDING NO.: N/A
DATE: OCTOBER 28, 2004
SCALE: N/A
SHEET NO.: DETAIL 01
E.F.N.:

k:\Projects\2003\IRB\DNREC\Dgn\DNREC02V_IRB.dgn
9/21/2006
1:18:05 PM