NOTE:

THE LOCATION OF ALL UNDERGROUND UTILITIES AND FEATURES SHOWN ARE APPROXIMATE ONLY AND NO GUARANTEE IS MADE THAT ALL EXISTING UTILITIES ARE SHOWN ON THE PLAN. THE CONTRACTOR SHALL FIELD VERIFY BOTH HORIZONTAL AND VERTICAL LOCATIONS OF ALL EXISTING UTILITIES PRIOR TO BEGINNING ANY CONSTRUCTION AT NO ADDITIONAL COST. THE CONTRACTOR SHALL CONTACT MISS UTILITY (1-800-282-8555) PRIOR TO THE BEGINNING OF ANY CONSTRUCTION ACTIVITY.

CURVE DATA (1)
PI = 250+19.398
Δ = 14° 58' 42.6789" LT
Dc = 95°29' 35.0665"
R = 59.9999'
T = 7.8877'
L = 15.6855'
E = 0.5162'

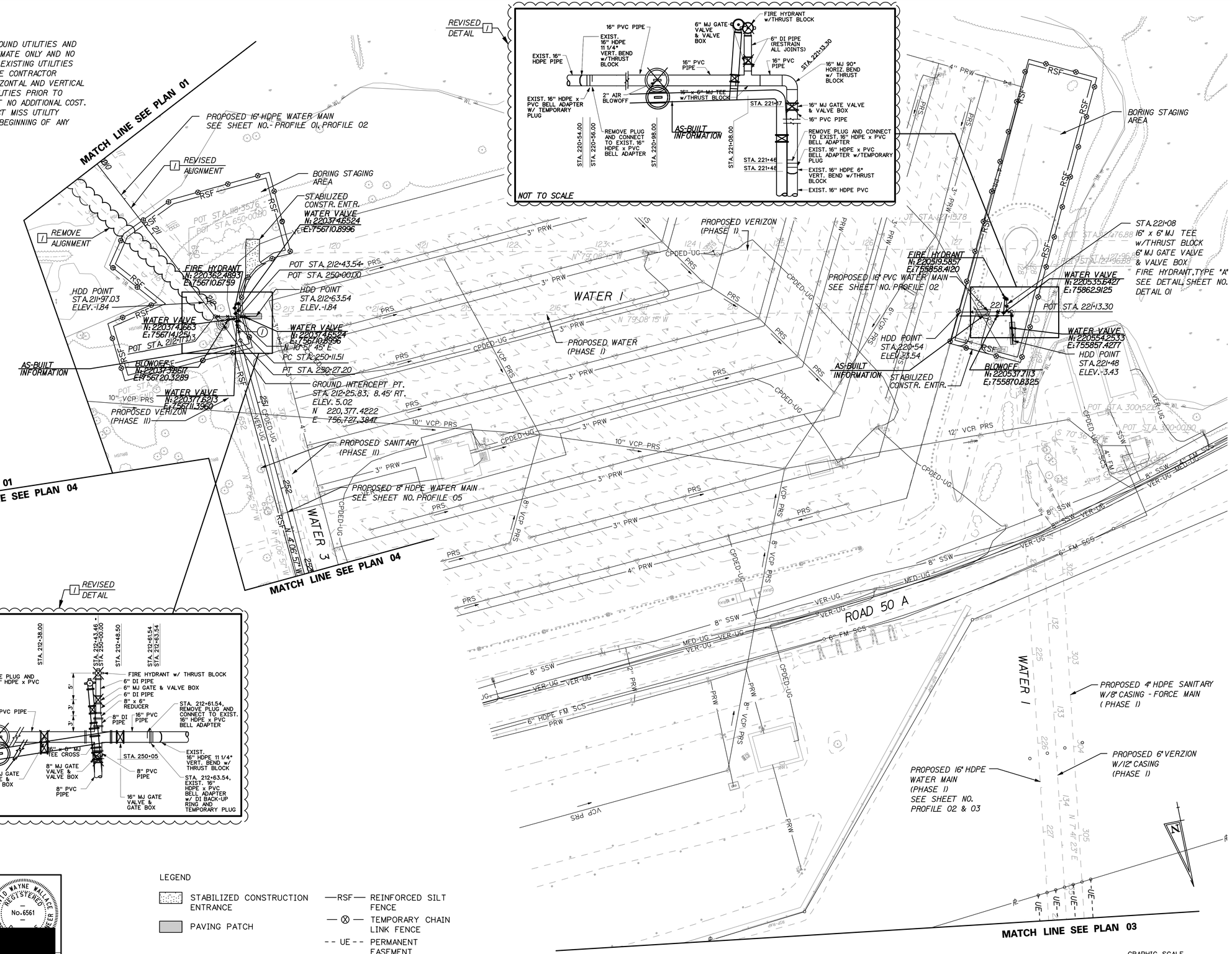

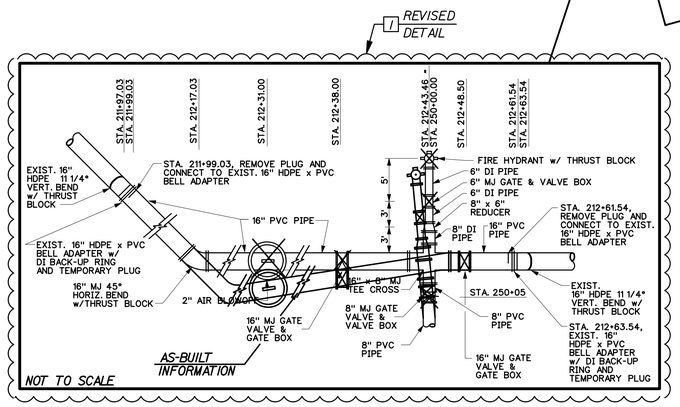

LEGEND

- STABILIZED CONSTRUCTION ENTRANCE
- PAVING PATCH
- —RSF— REINFORCED SILT FENCE
- — ⊗ — TEMPORARY CHAIN LINK FENCE
- -- UE -- PERMANENT EASEMENT

PREPARED BY
THE CONSULTING FIRM OF
RUMMEL, KLEPPER & KAHL, LLP

DAVID WAYNE WALLACE REGISTERED No. 6561 ENGINEER

1.14.2005

9/21/2006
2:34:49 PM

DATE:	DESCRIPTION:	BY:
1-25-05	(1) REVISED ALIGNMENT AND DETAILS	RK&K
7-14-05	AS-BUILT INFORMATION	RK&K

DELAWARE SEASHORE STATE PARK
INDIAN RIVER MARINA RE-DEVELOPMENT
PHASE II – WATER MAIN

DELAWARE DEPARTMENT OF NATURAL RESOURCES AND ENVIRONMENTAL CONTROL

DESIGNED BY: RK&K
DRAWN BY: RK&K
BUILDING NO.: N/A
DATE: OCTOBER 15, 2004
SCALE: 1" = 50'
SHEET NO.: PLAN 02
E.F.N.: