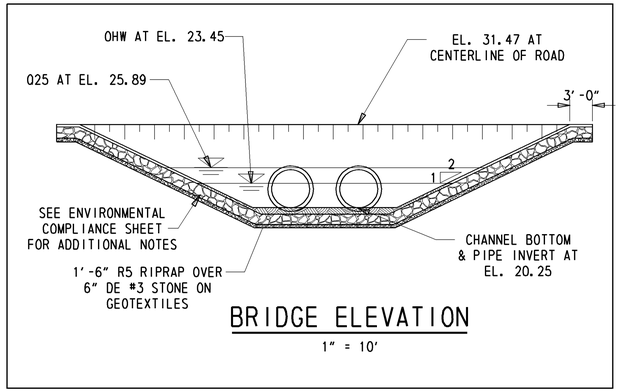

BRIDGE ELEVATION

1" = 10'

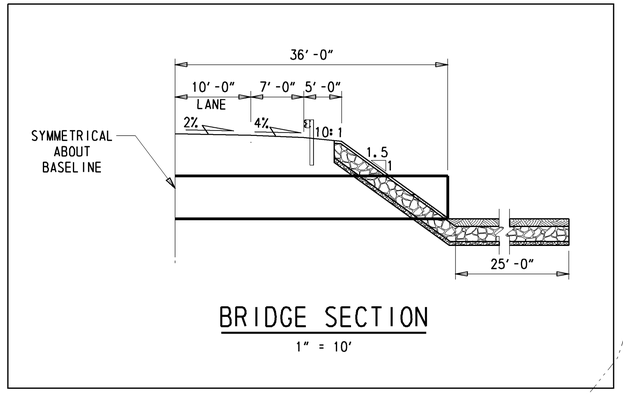

BRIDGE SECTION

1" = 10'

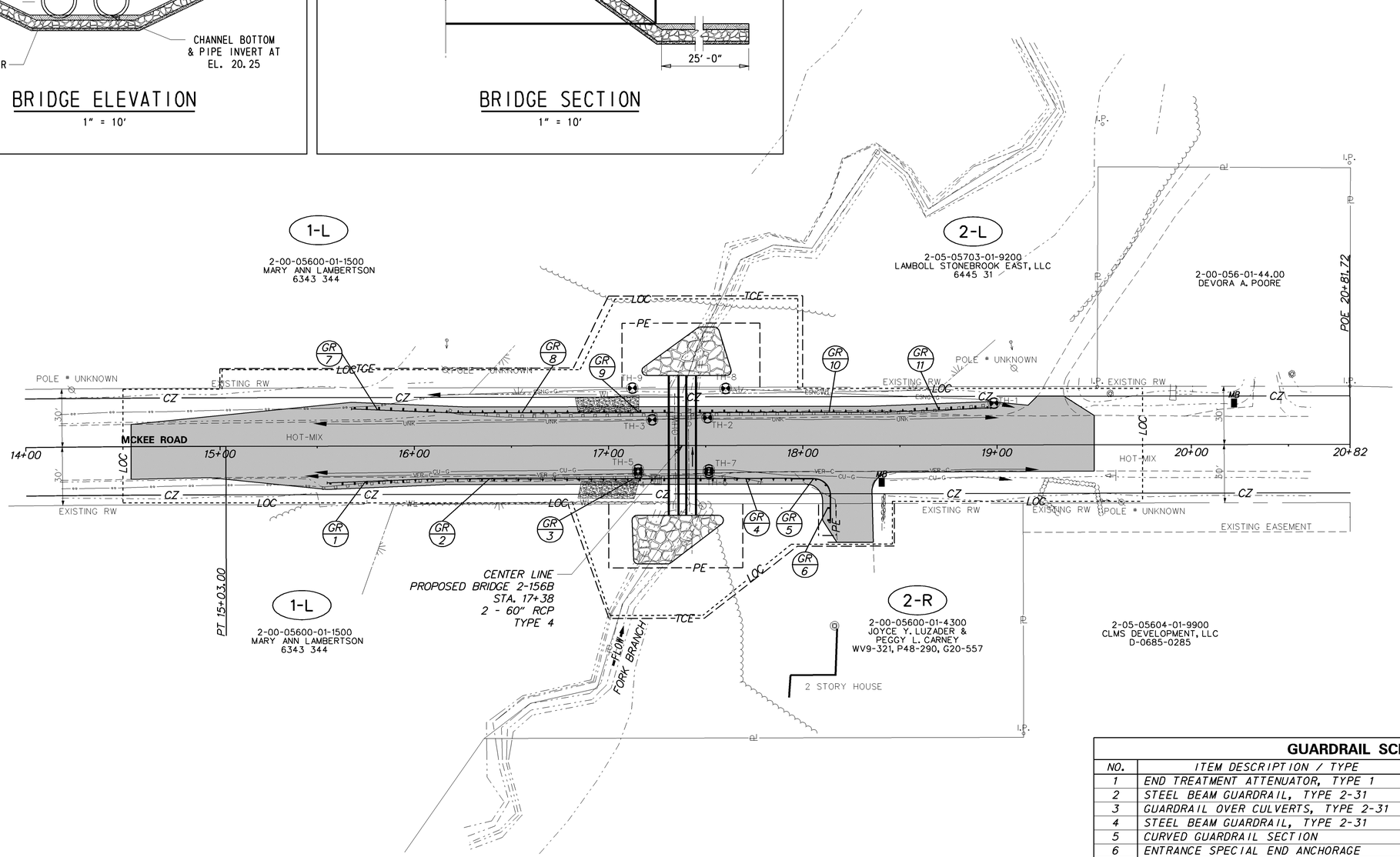

GUARDRAIL SCHEDULE

NO.	ITEM DESCRIPTION / TYPE	BEGIN STA.	OFFSET	LENGTH
1	END TREATMENT ATTENUATOR, TYPE 1	15+56.76	18.91'	50.00'
2	STEEL BEAM GUARDRAIL, TYPE 2-31	16+06.72	17.00'	100.00'
3	GUARDRAIL OVER CULVERTS, TYPE 2-31	17+06.72	17.00'	62.50'
4	STEEL BEAM GUARDRAIL, TYPE 2-31	17+69.22	17.00'	25.00'
5	CURVED GUARDRAIL SECTION	17+94.22	17.00'	31.68'
6	ENTRANCE SPECIAL END ANCHORAGE	18+14.09	32.31'	-
7	END TREATMENT ATTENUATOR, TYPE 1	15+69.32	-19.09'	50.00'
8	STEEL BEAM GUARDRAIL, TYPE 2-31	16+19.28	-17.00'	87.50'
9	GUARDRAIL OVER CULVERTS, TYPE 2-31	17+06.78	-17.00'	62.50'
10	STEEL BEAM GUARDRAIL, TYPE 2-31	17+69.28	-17.00'	75.00'
11	END TREATMENT ATTENUATOR, TYPE 1	18+44.28	-17.00'	50.00'

Y:\KENT\Bridge\T201207504

DELAWARE DEPARTMENT OF TRANSPORTATION

ADDENDUMS / REVISIONS

SCALE 0 30 60 90 FEET

KENT COUNTY PIPE REPLACEMENTS, STATE, 2012

CONTRACT	BRIDGE NO.	2-156B
T201207504	DESIGNED BY:	S.M.
COUNTY	CHECKED BY:	C.A.S.
KENT		

CONSTRUCTION PLAN

SHEET NO. 22

TOTAL SHTS. 36