N.T.S.

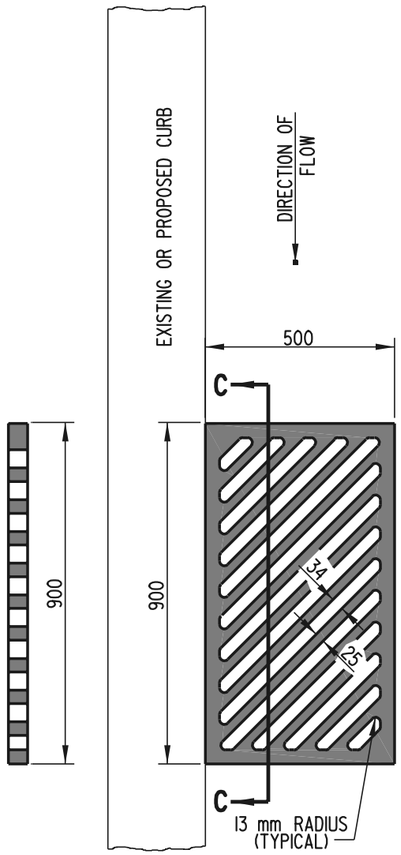

SECTION C-C

DRAINAGE INLET GRATE TYPE 1

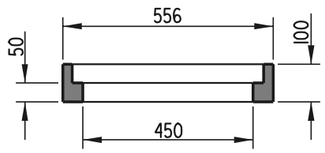

SECTION A-A

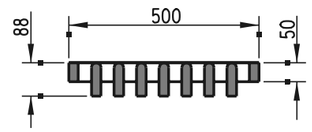

SECTION E-E

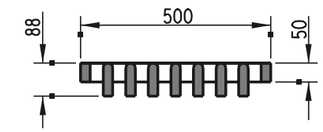

SECTION G-G

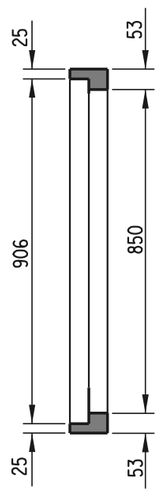

SECTION B-B

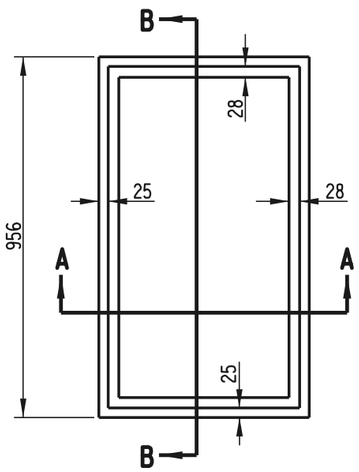

DRAINAGE INLET FRAME

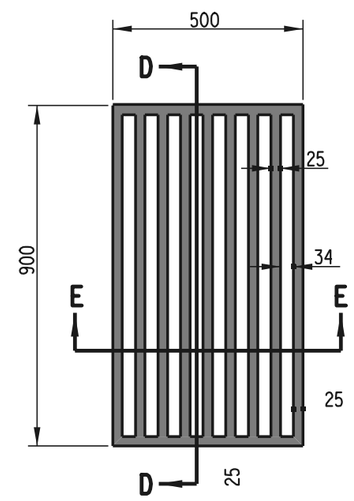

DRAINAGE INLET GRATE TYPE 2

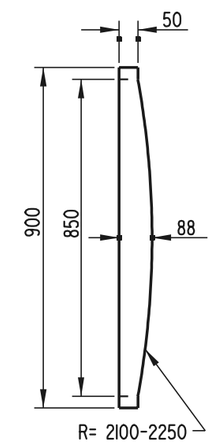

SECTION D-D

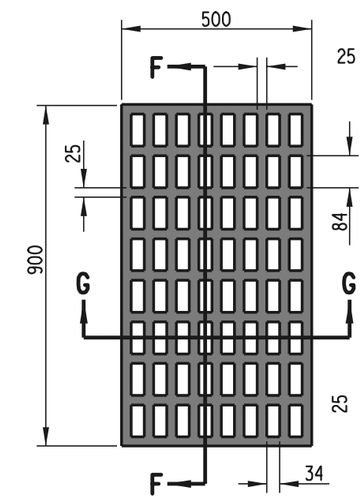

DRAINAGE INLET GRATE TYPE 3

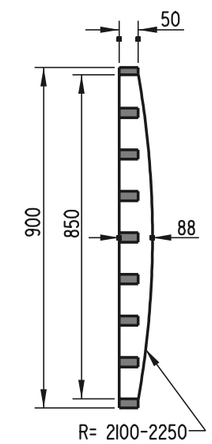

SECTION F-F

DRAINAGE INLET FRAME AND GRATES

NOTE: 1. BOTTOM OF TYPE 1 GRATE TO BE FLAT AND TRUE.
2. TYPE 2 GRATE SHALL NOT BE INSTALLED WHERE BICYCLE TRAFFIC MAY BE PRESENT.

DRAINAGE INLET DETAILS

12/10/98