THE STATE OF DELAWARE
DEPARTMENT OF TRANSPORTATION

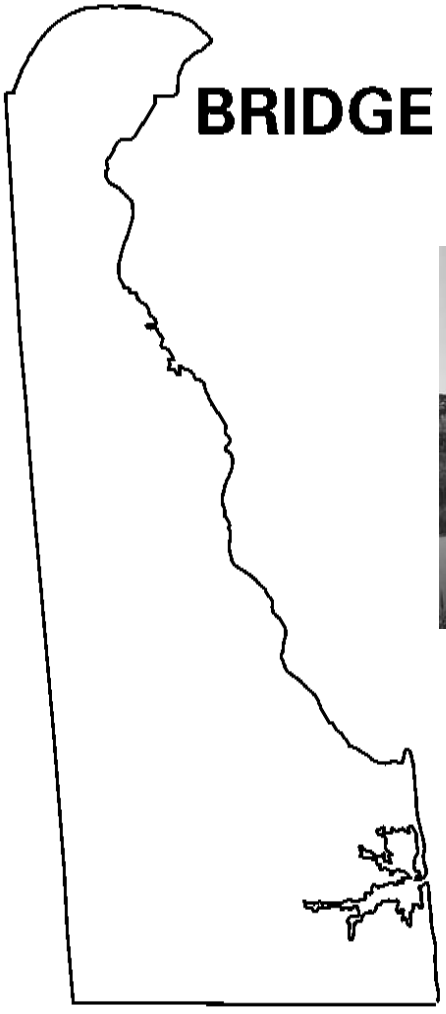

BRIDGE DESIGN MANUAL

MAY 2005

STATE OF DELAWARE
DEPARTMENT OF TRANSPORTATION
800 BAY ROAD
P.O. BOX 778
DOVER, DELAWARE 19903

NATHAN HAYWARD III
SECRETARY

MEMORANDUM

To: All Recipients of the May 2005 Bridge Design Manual

From: Kevin T. Canning, Quality Engineer

Date: July 21, 2005

Subject: **2005 Bridge Design Manual**

Attached you will find the Delaware Department of Transportation's 2005 Bridge Design Manual which will become effective August 1, 2005. Any DelDOT contracts that are scheduled for advertisement after January 1, 2006 shall conform to this Manual. This edition is a revision of the 1996 Bridge Design Manual. This Manual incorporates a dual system of units, U.S. Customary and Metric. This Manual has been approved by FHWA for use on all interstate and National Highway System (NHS) projects in Delaware. This Manual is available on DelDOT's intranet and internet sites.

Chapters Ten, Eleven and Fourteen, of the Manual are reserved for future publication.

Any comments or questions regarding the 2005 Bridge Design Manual should be addressed to Linda M. Osiecki at (302) 760-2342.

DMO:los
Enclosure
cc: Carolann Wicks, Chief Engineer
Dennis M. O'Shea, Assistant Director, Design
Jiten Soneji, Bridge Design Manual
Kevin Canning, Quality Engineer
Linda M. Osiecki, Consistency Engineer, Quality

DelDOT

Delaware Department of Transportation

Bridge Design Manual

Prepared By: **The Quality Section**

Coordinators: **Linda Osiecki**
Kevin Canning

Adopted as policy for all DelDOT Bridge Projects.

Authorized for advertisement after January 1, 2006.

Steering Committee:

Dennis O'Shea
Barry Benton
Doug Robb
Jiten Soneji
Doug Finney
Steve Richter
Vladislav Jandasek
Matthew Hake, FHWA

Special Thanks To:

Calvin Weber
Percival McNeil
Keith Gray
Gerald Bedwell
Robert Brady

Jiten K. Soneji 7/14/05
Jiten Soneji — Date
Bridge Design Engineer

Dennis M. O'Shea 7/14/05
Dennis O'Shea — Date
Assistant Director, Design

Carolann Wicks 7/19/05
Carolann Wicks — Date
Chief Engineer

Nathan Hayward III 7/21/05
Nathan Hayward III — Date
Secretary

Table of Contents

Page

Chapter One - Introduction
1.1 INTRODUCTION 1-1

Chapter Two - Bridge Project Development
2.1 INTRODUCTION 2-1
2.2 DESIGN SPECIFICATIONS 2-1
2.3 SOURCES OF BRIDGE PROJECTS 2-1
2.3.1 BRIDGE MANAGEMENT PROGRAM 2-2
2.3.1.1 Deficiency Ranking 2-2
2.3.1.2 Funding 2-2
2.3.2 PROJECT DEVELOPMENT PROJECTS 2-3
2.3.3 EMERGENCY AND MAINTENANCE PROJECTS 2-3
2.3.3.1 District Maintenance Forces 2-3
2.3.3.2 Contracts 2-4
2.3.4 PROJECTS FOR OTHER AGENCIES AND MUNICIPALITIES 2-4
2.3.5 PEDESTRIAN and highway BRIDGE OVERPASSES 2-4
2.4 BRIDGE TYPE SELECTION 2-4
2.4.1 GUIDELINES 2-5
2.4.2 ALTERNATIVE DESIGNS 2-5
2.4.3 VALUE ENGINEERING 2-6
2.5 DESIGN CONSIDERATIONS 2-6
2.5.1 DESIGN REQUIREMENTS 2-6
2.5.2 MAINTENANCE OF TRAFFIC 2-6
2.5.3 CONSTRUCTIBILITY 2-7
2.5.4 DESIGN FOR MAINTENANCE 2-7
2.5.4.1 Maintainability 2-7
2.5.4.2 Provisions for Inspection 2-8
2.5.5 FUTURE WIDENING 2-9
2.5.6 CONTEXT SENSITIVE DESIGN 2-9
2.6 DESIGN LOADS 2-9
2.6.1 LIVE LOADS 2-9
2.6.2 DEAD LOADS 2-9
2.7 BRIDGE LOAD RATING 2-9
2.8 PLAN PRESENTATION 2-9
2.8.1 DRAFTING STANDARDS 2-10

2.8.2 PLAN SHEET SEQUENCE 2-10
2.8.3 BRIDGE SHEET PREPARATION 2-10
2.8.3.1 General and Project Notes 2-10
2.8.3.2 Bridge Sheets 2-11
2.8.4 MINIMUM-DETAIL PLANS 2-11
2.8.5 OTHER PLAN SHEETS 2-11
2.9 BRIDGE DESIGN PROCEDURES 2-11
2.9.1 INTRODUCTION 2-11
2.9.1.1 Designed-In Value 2-11
2.9.1.2 Documentation of Design 2-12
2.9.1.3 Stewardship Agreement 2-13
2.9.1.4 Design Consultants 2-13
2.9.2 PROJECT INITIATION 2-14
2.9.2.1 Design Responsibility 2-14
2.9.2.2 Scoping Meeting 2-14
2.9.2.3 Project Initiation 2-15
2.9.2.4 Public Involvement 2-17
2.9.3 DATA ACQUISITION 2-27
2.9.3.1 Topographic Survey 2-27
2.9.3.2 Processing Survey Data 2-27
2.9.3.3 Survey Plans 2-29
2.9.3.3.1 Survey Plan Distribution 2-29
2.9.4 PERMITS AND ENVIRONMENTAL CONSIDERATIONS 2-29
2.9.4.1 Responsibilities 2-29
2.9.4.2 U.S. Coast Guard Permits 2-30
2.9.4.3 Corps of Engineers (COE) Permits 2-30
2.9.4.4 Department of Natural Resources and Environmental Control (DNREC) 2-31
2.9.4.4.1 Division of Water Resources 2-31
2.9.4.4.1a Wetlands & Subaqueous Lands Section 2-31
2.9.4.4.1b Water Supply Section 2-31
2.9.4.4.2 Division of Soil and Water Conservation 2-32
2.9.4.4.2a Sediment and Stormwater Management Section 2-32
2.9.4.4.2b Delaware Coastal Management Program 2-32
2.9.4.4.3 Division of Parks and Recreation 2-32
2.9.4.4.4 Division of Fish and Wildlife Restrictions 2-32
2.9.4.4.5 Division of Air and Waste Management 2-33
2.9.4.5 Section 106 Of The National Historic Preservation Act 2-33
2.9.4.6 New Castle County 2-34
2.9.4.7 Federal Highway Administration 2-34
2.9.4.8 Environmental Documentation 2-35
2.9.4.8.1 Categorical Exclusion 2-35
2.9.4.8.2 Environmental Assessment (EA) 2-35
2.9.4.8.3 Environmental Impact Statement (EIS) 2-35
2.9.5 PRELIMINARY DESIGN 2-48
2.9.5.1 Drainage and Foundation Reports 2-48
2.9.5.1.1 Hydraulic Report 2-48

2.9.5.1.2 Scour Evaluation Report 2-48
2.9.5.1.3 Foundation Report 2-48
2.9.5.2 Pre-TS&L and Conceptual Plans 2-48
2.9.5.3 Aesthetic Considerations 2-48
2.9.5.4 Design Exceptions 2-49
2.9.5.5 TS&L Plans 2-49
2.9.5.6 Preliminary Plans 2-50
2.9.5.7 Preliminary Plans Review 2-50
2.9.5.7.1 Preliminary Utility Plans 2-54
2.9.5.7.2 Traffic Design Request 2-54
2.9.5.8 Public Information 2-54
2.9.6 AGREEMENTS 2-54
2.9.6.1 Types and Purposes of Agreements 2-54
2.9.6.1.1 Town Agreements 2-54
2.9.6.1.2 Railroads 2-55
2.9.6.1.3 Utilities 2-55
2.9.6.1.4 Right-of-Way 2-55
2.9.6.1.5 Noise Ordinance Waivers 2-55
2.9.6.2 Designer Responsibility 2-55
2.9.6.3 Responsibility of Other Sections 2-55
2.9.7 SEMI-FINAL SUBMISSION 2-56
2.9.7.1 Semi-Final Right-of-Way Plan 2-56
2.9.7.2 Semi-Final Construction Plan Submittal Requirements 2-56
2.9.7.3 Utilities Submission 2-56
2.9.7.4 Semi-Final Construction Plan Review 2-56
2.9.8 SPECIAL PROVISIONS AND CONTRACT DOCUMENTS 2-57
2.9.9 FINAL PLANS AND ESTIMATES 2-57
2.9.9.1 Final Plans 2-57
2.9.9.2 Final Plans Review Meeting 2-57
2.9.9.3 Title Sheet Signatures 2-58
2.9.10 PS&E SUBMISSION 2-58
2.9.11 PS&E APPROVAL AND FUNDING 2-58
2.9.12 ADVERTISING 2-58
2.9.13 PRE-BID MEETINGS 2-58
2.9.14 ADDENDUMS 2-58
2.9.15 BID OPENING AND BID REVIEW 2-59
2.9.16 REVISIONS 2-59
2.9.17 AS-BUILT PLANS 2-59

Chapter Three - Hydrology and Hydraulics

3.1 INTRODUCTION 3-1
3.1.1 POLICY AND COORDINATION 3-1
3.1.2 DESIGN RESPONSIBILITIES 3-2
3.1.3 HYDRAULIC ASSESSMENT CHECKLIST 3-3
3.1.4 TOPOGRAPHIC SURVEY 3-3
3.1.5 HYDRAULIC REPORT 3-8
3.2 HYDROLOGY 3-8

3.2.1 INTRODUCTION....3-8
3.2.2 DOCUMENTATION....3-8
3.2.3 ESTIMATING FLOOD RUNOFF AND MAGNITUDES....3-8
3.2.3.1 USGS Method....3-9
3.2.3.2 TR-55....3-9
3.2.3.3 Recorded Data....3-9
3.2.3.4 Published Reports....3-10
3.2.3.5 The Rational Method....3-10
3.2.3.6 TR-20....3-10
3.2.4 DESIGN FLOOD FREQUENCY....3-10
3.2.5 FREQUENCY MIXING....3-10
3.2.6 SPILLWAY DESIGN....3-12
3.3 HYDRAULICS....3-12
3.3.1 CULVERT HYDRAULICS....3-12
3.3.2 BRIDGE HYDRAULICS....3-13
3.3.2.1 HEC-RAS....3-13
3.3.2.2 WSPRO....3-14
3.3.3 STREAM CHANNEL....3-14
3.3.4 ICE AND DEBRIS....3-14
3.3.5 TIDAL HYDRAULICS-BRIDGES AND CULVERTS....3-14
3.3.6 BRIDGE DECK DRAINAGE....3-15
3.3.7 TAX DITCHES....3-16
3.4 SCOUR EVALUATION AND PROTECTION....3-19
3.4.1 EVALUATION CRITERIA....3-19
3.4.1.1 Analysis Procedure....3-19
3.4.1.2 Scourability of Rock....3-20
3.4.1.3 Scour Evaluation Report....3-21
3.4.1.4 Plan Presentation....3-21
3.5 STREAM STABILITY....3-22
3.5.1 STREAM STABILITY ANALYSIS....3-22
3.5.2 BANK PROTECTION....3-22
3.5.3 CHANNEL MODIFICATIONS....3-23
3.6 PLAN PRESENTATION....3-24

Chapter Four - Bridge Load Rating

4.1 INTRODUCTION....4-1
4.1.1 RESPONSIBILITY....4-1
4.1.2 ASSUMPTIONS....4-1
4.1.3 LOAD RATING LEVELS....4-2
4.1.4 LOAD RESTRICTION POSTING....4-2
4.2 BRIDGE INSPECTIONS....4-5
4.2.1 INSPECTION TYPES....4-5
4.2.2 INSPECTION FILES....4-6
4.3 BRIDGE REPLACEMENT AND REHABILITATION RATING....4-6
4.3.1 REQUIRED RATINGS....4-6
4.3.2 RATED STRUCTURES AND ELEMENTS....4-6
4.4 LOAD RATING METHODS....4-7

4.4.1 ANALYSIS METHODS 4-7
4.4.1.1 Load Factor Method 4-7
4.4.1.2 Working Stress Design Method 4-7
4.4.1.3 Load and Resistance Factor Method 4-7
4.4.2 TOOLS 4-7
4.4.2.1 BRASS Data Set 4-7
4.4.2.2 Data Set Standards 4-8
4.4.3 LOAD TESTING 4-8
4.5 ANALYTICAL STEPS IN LOAD RATING 4-13
4.5.1 RATED MEMBERS 4-13
4.5.2 PLAN SHEET RATING NOTES 4-13
4.6 LIVE LOADS 4-13
4.6.1 LOAD DISTRIBUTION 4-14
4.7 LOAD RATING EXAMPLE 4-14
4.8 LOAD RATING REPORT 4-14

Chapter Five - Superstructure Design

5.1 INTRODUCTION 5-1
5.2 DESIGN CRITERIA 5-1
5.2.1 BRIDGE AND APPROACH GEOMETRY 5-1
5.2.1.1 Design Standards 5-1
5.2.1.2 Length 5-1
5.2.1.3 Width 5-2
5.2.1.4 Skew 5-2
5.2.1.5 Clearances 5-2
5.2.1.5.1 Vertical Clearance 5-2
5.2.1.5.2 Horizontal Clearance and Clear Zone 5-2
5.2.1.5.3 Railroad Clearance 5-3
5.2.2 Structural Analysis 5-6
5.2.2.1 AASHTO Method 5-6
5.2.2.2 Refined Method 5-6
5.2.3 DESIGN LOADS 5-6
5.2.3.1 Live Loads and Lane Loads 5-6
5.2.3.2 Dead Loads 5-6
5.2.3.3 Dynamic Load Allowance 5-6
5.2.3.4 Combinations of Loads 5-6
5.2.4 DESIGN METHODS 5-6
5.2.5 TEMPERATURE RANGE 5-6
5.2.6 DEFLECTIONS 5-7
5.3 CONCRETE BRIDGE DECKS 5-7
5.3.1 DESIGN OF CAST-IN-PLACE DECKS 5-7
5.3.1.1 Materials 5-7
5.3.1.2 Design 5-7
5.3.1.3 Thickness 5-7
5.3.1.4 Concrete Cover 5-7
5.3.1.5 Reinforcement 5-9
5.3.1.6 Stay-in-Place Forms 5-9

5.3.1.7 Pouring Decks 5-9
5.3.2 DESIGN OF PRECAST SLABS AND DECK PANELS 5-9
5.3.2.1 Materials 5-10
5.3.2.2 Design 5-10
5.3.2.3 Thickness 5-11
5.3.2.4 Concrete Cover 5-13
5.3.2.5 Reinforcement Splices 5-13
5.3.2.6 CIP Concrete 5-13
5.3.3 DESIGN OF COMPOSITE ACTION DECKS 5-13
5.3.4 FINISHED DECK ELEVATIONS 5-14
5.3.5 JOINTS 5-14
5.3.5.1 Transverse Joints 5-16
5.3.5.1.1 Strip Seals 5-16
5.3.5.1.2 Finger Joints 5-16
5.3.5.2 Longitudinal Joints 5-16
5.3.5.3 Construction Joints 5-16
5.3.6 DECK PROTECTIVE SYSTEMS 5-21
5.3.6.1 Overlays 5-21
5.3.7 MISCELLANEOUS DECK ITEMS 5-21
5.3.7.1 Bridge Rails 5-21
5.3.7.1.1 Policies 5-21
5.2.7.1.2 Types of Bridge Rails 5-22
5.3.7.1.3 Materials 5-29
5.3.7.1.4 Cover 5-29
5.3.7.1.5 Guardrail to Barrier Connections 5-29
5.3.7.2 Screening and Shields 5-29
5.3.7.3 Sidewalks 5-29
5.3.7.4 Curbs 5-33
5.4 STEEL BEAMS AND GIRDERS 5-33
5.4.1 TYPES 5-33
5.4.2 MATERIALS 5-34
5.4.3 DESIGN 5-34
5.4.3.1 Redundancy Requirements 5-34
5.4.3.2 Beam Spacing 5-34
5.4.3.3 Fatigue Design Criteria 5-34
5.4.3.4 Beam Design 5-35
5.4.3.5 Welding and Welding Procedures 5-35
5.4.3.6 Shear Connectors 5-35
5.4.3.7 Stiffeners, Diaphragms, and Bracing 5-35
5.4.3.8 Field Connections 5-47
5.4.4 CAMBER DIAGRAMS 5-50
5.4.5 PROTECTIVE COATINGS 5-50
5.5 PRESTRESSED CONCRETE BEAMS 5-53
5.5.1 TYPES 5-53
5.5.2 MATERIALS 5-53
5.5.3 DESIGN 5-53

5.5.3.1 Beam Spacing 5-54
5.5.3.2 Composite Design 5-54
5.5.3.3 Shear Developers 5-54
5.5.3.4 Continuity for Live Load 5-57
5.5.3.5 Diaphragms 5-57
5.5.3.6 Strand Design 5-57
5.5.3.7 Camber Diagram 5-57
5.6 BEARINGS 5-58
5.6.1 BEARING DEVICES 5-58
5.6.2 SEISMIC PROVISIONS 5-74
5.7 SLAB BRIDGES 5-74
5.7.1 MATERIALS 5-74
5.7.2 DESIGN 5-74
5.7.3 THICKNESS 5-74
5.7.4 CONCRETE COVER 5-74
5.8 APPROACH SLABS 5-75
5.8.1 MATERIALS 5-75
5.8.2 DESIGN 5-75
5.8.3 THICKNESS 5-75
5.8.4 CONCRETE COVER 5-75

Chapter Six - Substructure Design
6.1 INTRODUCTION 6-1
6.1 SUBSURFACE INVESTIGATIONS 6-1
6.1.1 INFORMATION NEEDED BY THE DESIGNER 6-1
6.1.2 REQUESTS FOR BORINGS 6-1
6.1.3 MATERIALS AND RESEARCH SECTION TESTS 6-4
6.1.4 SOIL SAMPLES 6-8
6.1.5 GROUND WATER MONITORING 6-8
6.1.6 BORING LOGS 6-9
6.1.7 SOILS DEFINITIONS 6-16
6.1.8 GEOTECHNICAL REPORTS 6-18
6.1.9 FOUNDATION REPORTS 6-19
6.2 FOUNDATION DESIGN 6-19
6.2.1 SPREAD FOOTING FOUNDATIONS 6-21
6.2.2 PILES 6-21
6.2.2.1 Determining the Need for a Pile Foundation 6-21
6.2.2.2 Types and Details 6-23
6.2.2.2.1 Precast-Prestressed Concrete Piles 6-23
6.2.2.2.2 Precast-Prestressed Concrete Cylinder Piles 6-25
6.2.2.2.3 Cast-in-Place Concrete Piles 6-25
6.2.2.2.3.1 Steel Shell Piles 6-25
6.2.2.2.3.2 Steel Pipe Piles 6-26
6.2.2.2.4 Steel H-Piles 6-29
6.2.2.2.5 Timber Piles 6-29
6.2.2.3 Selection of Pile Type 6-30
6.2.2.4 Pile Bearing Capacity 6-30

6.2.2.4.1 Resistance Factors 6-37
6.2.2.4.2 Lateral Loads on Piles 6-37
6.2.2.4.3 Static Analysis 6-37
6.2.2.4.4 Dynamic Formula 6-38
6.2.2.4.4.1 GRLWEAP 6-39
6.2.2.4.4.2 Input Information 6-39
6.2.2.4.4.3 Damping and Quake 6-39
6.2.2.4.4.4 Output 6-39
6.2.2.4.5 Pile Driving Analyzer 6-40
6.2.2.4.6 Pile-Soil Interaction 6-40
6.2.2.4.7 Pile Load Tests 6-41
6.2.2.5 Pile Protection 6-42
6.2.3 PILE-SUPPORTED FOOTINGS 6-42
6.2.4 DRILLED SHAFT FOUNDATIONS 6-42
6.2.4.1 Types of Drilled Shafts 6-43
6.2.4.2 Application of Drilled Shafts 6-43
6.3 SEISMIC DESIGN AND RETROFITTING 6-43
6.4 ABUTMENT DESIGN 6-44
6.4.1 CANTILEVER ABUTMENTS 6-46
6.4.2 STUB ABUTMENTS 6-46
6.4.3 INTEGRAL ABUTMENTS 6-47
6.4.4 DESIGN METHODOLOGY 6-47
6.4.5 DESIGN LOADS 6-47
6.5 PIER DESIGN 6-47
6.5.1 FRAME AND MULTI-COLUMN PIERS 6-47
6.5.1.1 Reinforcement 6-48
6.5.1.2 Construction Joints 6-48
6.5.1.3 Column Spacing 6-48
6.5.1.4 Pier Caps 6-48
6.5.2 SOLID OR HOLLOW SHAFT PIERS 6-54
6.5.3 PILE BENTS 6-54
6.6 RETAINING WALL DESIGN 6-54
6.6.1 TYPES 6-56
6.6.1.1 Post and Plank Walls 6-56
6.6.1.2 Sheet Pile Walls 6-56
6.6.1.2.1 Steel Sheet Piles 6-56
6.6.1.2.2 Concrete Sheet Piles 6-56
6.6.1.3 Reinforced Concrete Walls 6-57
6.6.1.4 Proprietary Retaining Walls 6-57
6.7 APPROACH ROADWAY EMBANKMENT 6-58
6.7.1 SETTLEMENT 6-58
6.7.2 SLOPE STABILITY 6-60
6.7.3 SLOPE AND BANK PROTECTION 6-62
6.7.3.1 General 6-62
6.7.3.2 Geosynthetics 6-63
6.7.3.3 Rock Riprap 6-63

6.7.4 MISCELLANEOUS 6-64
6.8 ARCHITECTURAL TREATMENTS 6-64
6.9 SUBSTRUCTURE DRAINAGE 6-64

Chapter Seven - Culvert, Rigid Frame and Arch Design
7.1 INTRODUCTION 7-1
7.2 GENERAL POLICY 7-1
7.2.1 CULVERT HYDRAULICS 7-4
7.2.2 FOUNDATION DESIGN 7-4
7.2.3 HEADWALLS 7-4
7.2.4 WINGWALLS 7-4
7.2.5 CUTOFF WALLS 7-5
7.2.6 SCOUR APRONS 7-5
7.2.7 GUARDRAIL ATTACHMENTS 7-5
7.2.8 MISCELLANEOUS 7-5
7.3 CONCRETE CULVERTS 7-5
7.3.1 MATERIALS 7-5
7.3.2 DESIGN 7-6
7.3.3 REINFORCED CONCRETE BOX CULVERTS 7-6
7.3.3.1 Precast Box Culverts 7-6
7.3.3.2 Cast-In-Place Box Culverts 7-7
7.3.4 Rigid Frames 7-11
7.3.5 CONCRETE PIPE CULVERTS 7-16
7.3.5.1 Material 7-16
7.3.5.2 Design 7-16
7.3.6 CONCRETE ARCHES 7-16
7.3.6.1 MATERIALS 7-16
7.3.6.2 DESIGN 7-16
7.3.6.3 THICKNESS 7-17
7.3.6.4 CONCRETE COVER 7-17
7.3.7 PRECAST PROPRIETARY STRUCTURES 7-17
7.4 METAL CULVERTS 7-17
7.4.1 CORRUGATED METAL PIPES 7-17
7.4.2 STRUCTURAL PLATE PIPE STRUCTURES 7-18
7.4.3 STRUCTURAL PLATE BOX CULVERTS 7-18
7.5 HIGH DENSITY POLYETHYLENE PLASTIC PIPES 7-18
7.5.1 MATERIAL 7-18
7.5.2 DESIGN 7-18

Chapter Eight - Timber Structures Design
8.1 INTRODUCTION 8-1
8.1.1 ADVANTAGES AND DISADVANTAGES OF TIMBER BRIDGES 8-1
8.1.2 TIMBER AS A BRIDGE MATERIAL 8-1
8.1.2.1 TIMBER BEAM SUPERSTRUCTURE 8-2
8.1.2.2 LONGITUDINAL DECK SUPERSTRUCTURES 8-2
8.2 PHYSICAL PROPERTIES OF STRUCTURAL TIMBER 8-3
8.2.1 LUMBER SPECIES 8-3

8.2.2 DIRECTION OF GRAIN....8-3
8.2.3 MOISTURE CONTENT....8-3
8.2.4 DENSITY....8-4
8.2.5 KNOTS....8-4
8.2.6 DURABILITY....8-4
8.3 MECHANICAL PROPERTIES....8-4
8.3.1 SAWN LUMBER GRADING....8-4
8.3.1.1 Grading Rules....8-5
8.3.1.2 Specifying Allowable Timber....8-5
8.3.2 LUMBER SIZES....8-7
8.3.3 MECHANICAL PROPERTIES OF GLUE LAMINATED TIMBER (GLULAM)....8-7
8.3.3.1 Product Standards....8-7
8.3.3.2 Adhesives....8-8
8.3.3.3 Joints....8-8
8.3.3.4 Quality Control....8-8
8.3.4 TABULATED DESIGN VALUES....8-8
8.3.4.1 Allowable Stress Values for Glulam Timber....8-9
8.3.4.2 Adjustments to Tabulated Values....8-9
8.4 PRESERVATIVE TREATMENTS....8-10
8.4.1 TYPES OF WOOD PRESERVATIVES....8-10
8.4.1.1 Creosote....8-10
8.4.1.2 Pentachlorophenol (Penta)....8-11
8.4.1.3 Waterborne Preservatives....8-11
8.4.1.4 Copper Naphthenate....8-11
8.4.2 TREATED TIMBER SPECIFICATIONS....8-11
8.4.2.1 Design Considerations....8-12
8.5 HARDWARE....8-12
8.6 SUPERSTRUCTURE DESIGN CRITERIA....8-13
8.6.1 LOADS....8-13
8.6.1.1 Load Distribution....8-14
8.6.1.2 Impact....8-14
8.6.1.3 Buoyancy....8-14
8.6.2 DEFLECTION....8-14
8.7 LONGITUDINAL DECK DESIGN....8-14
8.8 RAILING FOR TIMBER DECKS....8-23
8.9 HOT-MIX WEARING SURFACES FOR TIMBER DECKS....8-24
8.10 SUBSTRUCTURE DESIGN....8-24
8.10.1 TIMBER ABUTMENTS....8-24
8.10.2 TIMBER BENTS....8-25
8.10.3 TIMBER FENDERS....8-25

Chapter Nine - Rehabilitation of Existing Bridges

9.1 INTRODUCTION....9-1
9.2 ENVIRONMENTAL CONSIDERATIONS....9-2
9.2.1 REPAINTING....9-2
9.2.2 RECYCLING....9-3
9.2.3 DEMOLITION....9-3

9.3 BRIDGE DECKS....9-3
9.3.1 CONCRETE DECKS....9-3
9.3.1.1 Condition Survey....9-3
9.3.1.1.1 Visual Inspection....9-3
9.3.1.1.2 Chloride Content Analysis....9-4
9.3.1.1.3 Freeze-Thaw Test....9-5
9.3.1.1.4 Half-Cell Analysis....9-6
9.3.1.1.5 Delamination Survey....9-7
9.3.1.1.6 Coring....9-7
9.3.1.1.7 Petrographic Analysis....9-7
9.3.1.2 Deck Condition Evaluation....9-7
9.3.1.3 Concrete Removal....9-9
9.3.1.4 Concrete Deck Rehabilitation....9-9
9.3.1.4.1 Patching....9-10
9.3.1.4.1.1 Repair by Patching....9-10
9.3.1.4.2 Overlay....9-11
9.3.1.4.3 Waterproofing....9-12
9.3.1.5 Concrete Deck Replacement....9-12
9.3.1.5.1 Cast-in-Place Concrete....9-12
9.3.1.5.2 Precast Concrete....9-12
9.3.1.5.3 Orthotropic Decks....9-13
9.3.2 STEEL GRID DECKS....9-13
9.3.2.1 Steel Grid Deck Evaluation....9-13
9.3.2.1.1 Connection Failure....9-14
9.3.2.1.2 Reduced Skid Resistance....9-14
9.3.2.1.3 Fatigue Evaluation....9-14
9.3.2.1.4 Corrosion....9-14
9.3.2.1.5 Delamination of Surfacing....9-14
9.3.2.2 Steel Grid Deck Replacement....9-14
9.3.3 TIMBER DECKS....9-15
9.3.3.1 Timber Deck Survey and Evaluation....9-15
9.3.3.2 Timber Deck Replacement....9-15
9.3.4 DECK PROTECTIVE SYSTEMS....9-15
9.3.4.1 Waterproofing....9-15
9.3.4.2 Cathodic Protection....9-15
9.3.4.3 Epoxy-Coated Reinforcing Steel....9-16
9.3.4.4 Overlays....9-16
9.3.5 SAFETY CONSIDERATIONS....9-16
9.4 RAILINGS....9-16
9.5 JOINT REPAIR/REPLACEMENT....9-17
9.6 APPROACH SLABS....9-18
9.7 BEAMS AND GIRDERS....9-18
9.7.1 CONVENTIONALLY REINFORCED CONCRETE BEAMS....9-18
9.7.1.1 Concrete Beam Repairs....9-18
9.7.1.2 Repair Materials....9-19
9.7.1.3 Surface Preparation....9-19

9.7.1.4 Surface Patching....9-20
9.7.1.5 Deep Repairs....9-20
9.7.1.6 Pneumatically Placed Concrete....9-22
9.7.1.7 Pressure Injection....9-22
9.7.2 PRESTRESSED CONCRETE BEAMS....9-22
9.7.2.1 Damage Evaluation....9-22
9.7.2.2 Repairs....9-24
9.7.2.3 Preloading....9-24
9.7.2.4 Beam Replacement....9-28
9.7.3 STEEL BEAMS AND GIRDERS....9-28
9.7.3.1 In-Depth Investigation....9-28
9.7.3.2 Corrosion....9-29
9.7.3.3 Brittle Fracture....9-29
9.7.3.4 Fatigue Cracks....9-29
9.7.3.5 Fire Damage....9-29
9.7.3.6 Collision Damage....9-30
9.7.4 REMEDIAL MEASURES....9-30
9.7.4.1 Cleaning and Painting....9-30
9.7.4.2 Cathodic Protection....9-31
9.7.4.3 Strengthening....9-31
9.7.4.4 Crack Repair....9-32
9.7.4.5 Peening....9-32
9.7.4.6 Bolting Splice Plates....9-32
9.7.4.7 Heat Straightening....9-32
9.7.4.8 Member Replacement....9-33
9.7.5 BEARINGS....9-33
9.7.5.1 Types of Problems....9-33
9.7.5.2 Seismic Requirements....9-33
9.7.5.3 Bearing Rehabilitation Methods....9-33
9.7.5.3.1 Cleaning and Painting....9-34
9.7.5.3.2 Jacking and Resetting....9-34
9.7.5.3.3 Lubrication....9-34
9.7.5.4 Bearing Replacement....9-34
9.8 FOUNDATION AND SUBSTRUCTURE....9-35
9.8.1 CRACK REPAIR....9-35
9.8.2 REPLACEMENT OF DETERIORATED CONCRETE....9-35
9.8.3 BEARING SEAT REPAIR....9-35
9.8.4 REPAIR OF CONCRETE SUBSTRUCTURES OVER WATER....9-40
9.8.4.1 Underwater Repairs....9-40
9.8.4.2 Splash Zone Repairs....9-40
9.8.4.3 Above-Water Repairs....9-43
9.8.5 PILE REPAIRS....9-43
9.8.5.1 Timber Pile Rehabilitation....9-43
9.8.6 SCOUR AND UNDERMINING....9-46
9.8.6.1 Riprap (Stone or Sacked Concrete)....9-46
9.8.6.2 Bagged Concrete....9-47

9.8.6.3 Sheeting and Filling 9-48
9.8.7 STABILIZATION AND UNDERPINNING 9-48
9.8.7.1 Driven Piling and Needle Beams 9-49
9.8.7.2 Structural Frames 9-50
9.8.7.3 Tie Backs and Deadmen 9-50
9.8.8 UNDERDRAIN REPAIR 9-50
9.8.9 SLOPE PAVING 9-50
9.9 RETAINING WALLS 9-55
9.9.1 REINFORCED CONCRETE 9-55
9.9.2 PROPRIETARY WALLS 9-55
9.9.3 GRAVITY WALLS 9-55
9.9.4 STEEL SHEET PILING 9-55
9.9.5 GABIONS 9-56
9.10 MAINTENANCE AND PROTECTION OF TRAFFIC 9-56
9.11 UTILITIES 9-56

Chapter Ten – RESERVED

Chapter Eleven– RESERVED

Chapter Twelve – Computer Applications
12.1 INTRODUCTION 12-1
12.2 SOFTWARE APPLICATIONS 12-1
12.2.1 SOFTWARE APPROVAL 12-1
12.3 COMMON STANDARDS 12-2
12.4 COMPUTER FILE ADMINISTRATION 12-2
12.4.1 FILE MANAGEMENT 12-2
12.4.2 AS-BUILT PLANS 12-2
12.4.3 ARCHIVES 12-2
12.4.4 CONSULTANT CADD REQUIREMENTS 12-3
12.5 MISCELLANEOUS RESOURCES 12-3
12.5.1 OFFICE OF INFORMATION TECHNOLOGY (OIT) 12-3
12.5.2 SPECIAL PROVISIONS 12-3
12.5.3 PLANNING 12-3
12.5.3.1 Mapping 12-3
12.5.3.1.1 Geographic Information System (GIS) INFORM 12-4

Chapter Thirteen – Construction Coordination
13.1 INTRODUCTION 13-1
13.2 DELDOT CONSTRUCTION 13-1
13.2.1 CONSTRUCTION GROUP 13-1
13.3 MATERIALS AND RESEARCH SECTION 13-2
13.4 DESIGN 13-2
13.5 SAFETY SECTION 13-3
13.6 DELDOT CONSTRUCTION MANUAL 13-3
13.7 STANDARD SPECIFICATIONS 13-3
13.8 NEW PRODUCT EVALUATION 13-3

13.9 CONSTRUCTION SUPPORT 13-3
13.9.1 PRECONSTRUCTION MEETING 13-3
13.9.2 KEY CONSTRUCTION ACTIVITY MEETINGS 13-4
13.9.3 TEST PILE DRIVING 13-4
13.9.4 PRE-DECK POUR MEETING 13-4
13.9.5 SEMI-FINAL INSPECTION 13-4
13.9.6 UNFORESEEN OR CHANGED CONDITIONS 13-4
13.9.7 CONSULTANT CONSTRUCTION SUPPORT 13-5
13.9.8 AS-BUILT PLANS 13-5
13.10 CONTRACTOR SUBMISSIONS 13-5
13.10.1 WORKING DRAWING SUBMISSIONS 13-6
13.10.2 MATERIAL SUBMISSIONS 13-6
13.11 PLAN CHANGES 13-6
13.11.1 PLAN REVISIONS 13-7
13.11.2 FIELD CHANGES 13-7
13.11.3 COST ANALYSIS 13-7
13.11.4 CONSTRUCTION CLAIMS 13-7

Chapter Fourteen – RESERVED

Appendix A – Design References
A.1 INTRODUCTION A-1
A.2 DESIGN REFERENCES A-1

FIGURES

No.	Title	Page
2-1	Example Evaluation Matrix	2-6
2-2	Sample Construction Project Estimate Form	2-18 to 2-24
2-3	Sample FS-1 Form – Project Authorization and Funding	2-25
2-4	Sample Combined Project Initiation and Project Number Request Form	2-26
2-5	Sample Survey Request Form	2-28
2-6	Sample CEE Report	2-36 to 2-47
2-7	Design Exception Request Form	2-51
2-8	Project Design Control Checklist Form	2-52
2-9	Design Criteria Form	2-53
3-1	Hydraulic Assessment Checklist for Drainage Design	3-4 to 3-7
3-2	Design Frequency Criteria	3-11
3-3	Frequencies for Coincidental Occurrence	3-11
3-4	Scupper Downspout Support Bracket Elevation	3-17
3-5	Scupper Downspout Support Bracket Details	3-18
3-6	Sample Scour Project Note	3-21
3-7	Typical Riprap Detail	3-23
3-8	Typical Section Along Stream	3-26
4-1a	Sample Load Rating Plan Sheet Note (Bridges Required To Be Rated)	4-3
4-1b	Sample Load Rating Plan Sheet Note (Bridges Not Required To Be Rated)	4-3
4-2	Safe Load Posting Decision Flow Chart	4-4
4-3	Enforcement Levels	4-5
4-4	Typical BRASS Load Rating Data Set	4-9
4-5	Axle Loadings and Spacings	4-10 to 4-12
5-1	Crashwall Details	5-4
5-2	Railroad Clearances	5-5
5-3	Stay-in-Place Form Details	5-8
5-4	Typical Precast Deck Slab	5-11
5-5	Typical Precast Panel to Beam Connections	5-12
5-6	Dimensions of Precast Deck Slab	5-12
5-7	Dimensions of Precast Deck Panels	5-13
5-8	Joint at Fixed Bearing	5-15
5-9	Transverse Strip Seal Joint Details	5-17 to 5-18
5-10	Finger Joint Details	5-19
5-11	Longitudinal Strip Seal Joint Details	5-20
5-12	Cold Construction Joint Details	5-21
5-13	F-Shape Barrier Details	5-23
5-14	Pedestrian Railing with Tube Handrail Details	5-24
5-15	Open Ornamental Barrier Details	5-25
5-16	Aesthetic Stone-Faced Barrier without Handrail	5-26
5-17a	Handrail Design Guidelines	5-27

5-17b Handrail Details 5-28
5-18 Screening Details ..... 5-30 to 5-31
5-19 Shield Details 5-32
5-20 Shear Developer – Steel Beams 5-36
5-21 Intermediate and Bearing Stiffener Details – Steel Beams ..... 5-37 to 5-38
5-22 Cross Frame Details – Steel Beam Example 5-39
5-23 End Cross Frame Details – Steel Beam Example ..... 5-40 to 5-41
5-24 Connection Plate Details – Steel Beam Example ..... 5-42 to 5-43
5-25 Lateral Bracing Details – Steel Beam Example 5-44
5-26 Rolled Beam Intermediate Diaphragm Detail Example ..... 5-45 to 5-46
5-27 Longitudinal/Transverse Stiffener Intersection Details – Steel Beams ..... 5-48 to 5-49
5-28 Typical Camber Diagram for Steel Beams ..... 5-51 to 5-52
5-29 Composite Details for Concrete Beams 5-55
5-30 Shear Connection Details for Adjacent Concrete Box Girders 5-56
5-31 Typical Camber Diagram for Concrete Beams 5-58
5-32 Notes for Bearings ..... 5-60 to 5-61
5-33 Elastomeric Bearing Details ..... 5-62 to 5-63
5-34 Neoprene Bearing Details 5-64
5-35 Steel Bearings – Expansion ..... 5-65 to 5-66
5-36 Steel Bearings – Fixed ..... 5-67 to 5-68
5-37a,b Expansion High-Load Multi-Rotational Bearing Detail Example ..... 5-69 to 5-70
5-37c Fixed High-Load Multi-Rotational Bearing Detail Example 5-71
5-37d High-Load Multi-Rotational Bearing Detail Example 5-72
5-38 Pot Bearing Details 5-73
5-39 Approach Slab Design Details ..... 5-76 to 5-78

6-1 Boring Request Form 6-3
6-2 N-Value Correction Factors for Granular Soils ..... 6-5 to 6-6
6-3 Relationship Between Corrected N-Values and ϕ 6–7
6-4 Engineering Classification for In Situ Rock Quality 6-8
6-5 Sample Boring Log ..... 6-10 to 6-13
6-6 Sample Summary of Boring Log Soil Analysis Tests ..... 6-14 to 6-15
6-7 AASHTO Soil Classification System 6-17
6-8 Foundation Types and Applicable Soils Conditions 6-20
6-9 Principal Situations Where Piles May Be Needed 6-22
6-10 Typical Precast-Prestressed Concrete Pile Details 6-24
6-11 Typical Splice Detail – Fluted Steel Shell 6-26
6-12 Typical Pile Reinforcement – Pile Shell 6-27
6-13 Typical Splice Detail – Pipe Pile Shell 6-28
6-14 Design Criteria for Piles – Timber 6-31
6-15 Design Criteria for Piles – Steel H-Sections 6-32
6-16 Design Criteria for Piles – Precast-Prestressed Concrete 6-33
6-17 Design Criteria for Piles – Cast-in-Place Concrete 6-34
6-18 Design Criteria for Piles – Drilled Shafts 6-35
6-19 Guide to Pile Type Selection for Subsurface Conditions 6-36
6-20 Guide to Pile Shape Effects 6-36

6-21 Cantilever Abutment Detail Example 6-45
6-22 Stub Abutment Detail Example 6-46
6-23 Seismic Reinforcement for Columns ..... 6-49 to 6-50
6-24 Reinforced Concrete Pier Example ..... 6-51 to 6-53
6-25 Point of Fixity 6-55
6-26 Recommended K Values 6-55
6-27 Surcharge Settlement vs. Time 6-59
6-28 Wick Drains 6-59
6-29 Circular Arc Failure 6-60
6-30 Sliding Block Failure 6-61
6-31 Lateral Squeeze of Foundation Soil 6-61
6-32 Slope Stability Software Applications 6-62

7-1a Box Culvert Example – Section 7-2
7-1b Box Culvert Example – Elevation 7-3
7-2 Wingwall to Culvert and Wingwall to Wingwall Connection Details 7-8
7-3 Typical CIP Cutoff Wall 7-9
7-4 Typical Precast Cutoff Wall 7-10
7-5 Post Tensioning Components Details ..... 7-12 to 7-13
7-6 Rigid Frame Detail Example 7-14
7-7 Rigid Frame Shear Key Detail Example 7-15

8-1 Typical Lumber Grade Mark 8-6
8-2 Custom Glulam Product Quality Mark 8-9
8-3 Typical Lateral and Withdrawal Connections for Timber 8-15
8-4 Types of Fasteners Used for Timber Bridges 8-15
8-5a Nailing and Uplift Spike Details 8-16
8-5b,c Allowable Withdrawal Load ..... 8-17 to 8-18
8-6a Common Washer Types for Timber Connections 8-19
8-6b,c Allowable Lateral Load ..... 8-20 to 8-21
8-7 Transverse Bending and Shear 8-22
8-8a Typical Timber Bridge Rail and Stressing Rod Layout Example 8-26
8-8b Typical Timber Bridge Rail 8-27
8-9 Pile Supported Abutment Detail 8-28
8-10a Pile Supported Bent Example 8-29
8-10b Typical Shear Developer Detail 8-30

9-1 Chloride Concentration Criteria 9-5
9-2 Corrosion Evaluation Criteria 9-6
9-3 Bridge Deck Evaluation Criteria 9-8
9-4 Full Depth Deck Repair 9-11
9-5 Concrete Beam Patching Details 9-21
9-6 Post-Tensioning Method 9-25
9-7 Internal Splicing 9-26
9-8 Metal Sleeve Splice 9-27
9-9 Jacking Details ..... 9-37 to 9-39
9-10 Substructure Repairs ..... 9-41 to 9-42
9-11 Pile Repairs 9-44

9-12 Timber Pile Repair Detail Example 9-45
9-13 Foundation Repairs – Bagged Concrete 9-47
9-14 Sheeting and Filling 9-48
9-15 Underpinning with Driven Piles and Needle Beams 9-49
9-16 Structural Frames – Top Support 9-51
9-17 Structural Frames – Bottom Support 9-52
9-18 Jumper Bridge 9-53
9-21 Tie Backs and Deadmen 9-54

Chapter One

Introduction

1.1 INTRODUCTION

The Delaware Department of Transportation (DelDOT) has developed this Bridge Design Manual to provide guidance and assistance in the theory and practice of all design related to bridges and structures as authorized by the State Legislature. This manual documents DelDOT policies and prescribes procedures. This manual is directed primarily to Department Bridge Design personnel and consulting engineers for the design of state-maintained structures.

DelDOT's mission is to provide a safe, efficient, and environmentally sensitive transportation network that offers a variety of convenient and cost-effective choices for the movement of people and goods. Some of the major functions of DelDOT are the planning, design, construction, and maintenance of roadways, bridges, and other multi-modal transportation facilities within the State. The construction and improvement of roads and bridges involves close coordination among the divisions within DelDOT. The general functions of some of the divisions of DelDOT are listed below.

Transportation Solutions: Developing and constructing all projects as guided by the Statewide Long Range Transportation Plan to meet identified transportation needs. Sections within the Division include:

- Bridge Design
- Construction
- Environmental Studies
- Materials and Research (M&R)
- Project Development
- Quality
- Statewide Support
- Survey
- Team Support
- Traffic
- Utilities

Maintenance and Operations: Inspecting, maintaining, managing and operating Delaware's roads, bridges and toll facilities.

- Bridge Management
- Business Management
- Community Transportation Needs Program
- National Pollutant Discharge Elimination System (NPDES) Program
- Outdoor Advertising
- Pavement Management
- Pavement Markings
- Public Works
- Roadside Beautification

- Sign Fabrication and Installation
- Stormwater Management
- Street and Overhead Sign Lighting
- Toll Operations
- Transportation System Maintenance

Planning: Providing all planning services to meet the long-range vision of the Department and the Governor's Livable Delaware goals.

- Development Coordination
- Real Estate
- Statewide and Regional Planning
- Statistical Research and Special Programs
- Subdivisions
- Transportation Enhancements

Chapter Two

Bridge Project Development

2.1 INTRODUCTION

The procedures and considerations for developing bridge projects are presented in this chapter. Refer to the *Road Design Manual* and the *Project Development Manual* for what is not covered by this manual.

For DelDOT, a bridge is defined as a structure, including supports, erected over a depression or an obstruction, such as water, a highway or a railway, for carrying traffic or other moving loads that has an opening exceeding 20 sq ft [1.86 m^2].

Any project involving construction of a new bridge meeting the above requirements must have a Bridge ID number assigned by the Bridge Management Section. This should be done as early in the project development process as possible, after the structure size has been determined. Contact the Bridge Management Section for Bridge ID number assignment.

2.2 DESIGN SPECIFICATIONS

In general, DelDOT adopts the design procedures in the the American Association of State Highway and Transportation Officials (AASHTO) publication *AASHTO LRFD Bridge Design Specifications*. Designers should refer to that publication for any items not specifically covered by this manual. Where there are differences between this manual and the AASHTO specifications, this manual governs. Throughout this manual, "*AASHTO Specifications*" refers to the *AASHTO LRFD Bridge Design Specifications*, and *Standard Specifications* refers to the *DelDOT Standard Specifications for Road and Bridge Construction*.

2.3 SOURCES OF BRIDGE PROJECTS

Bridge design projects may be initiated in several different ways, including:

- the bridge management program;
- Authorization Bills passed by the State Legislature;
- bridge improvements to conform with roadway improvements;
- bridge improvements to conform with corridor improvements;
- emergency projects;
- the pipe replacement program; and
- projects for other agencies.

Bridge projects in all of the above categories except the emergency projects, the pipe replacement program and projects for other agencies are included in the Department's Capital Transportation

Program (CTP). The CTP includes a funding line, "Deficient Bridges", to fund other bridge projects which may be identified during the year through the bridge management and inspection programs; specific projects may not be listed until the annual CTP update is complete.

2.3.1 BRIDGE MANAGEMENT PROGRAM

2.3.1.1 Deficiency Ranking

All Delaware bridges in the National Bridge Inventory (NBI) (bridges with spans greater than 20 feet [6.1 m]) are inspected periodically (at least every other year) to evaluate their condition and ensure the safety of the public. Bridges not on the NBI are inspected at least once every five years. Refer to Section 2.1 for size requirements for non-NBI bridges. Bridges not owned by the state are inspected by their owners. Bridges must be inspected to be eligible for federal-aid funds. Information from the inspections is entered into the Bridge Management System (BMS). The Department uses the Pontis Bridge Management System, which was developed through an AASHTO/FHWA joint development effort. Pontis provides a comprehensive ranking based on benefit/cost ratios for each bridge. It includes preventative maintenance strategies as well as replacement and rehabilitation options. Pontis is also used for multi-year optimizations for use in projecting budget needs.

For each bridge, the Bridge Management Section performs an NBI inspection and a Pontis element level inspection. NBI inspections provide an overview of the major bridge areas, i.e., deck, superstructure, and substructure, as well an appraisal of the structural adequacy and functionality of the bridge. Pontis element level inspections provide detailed inspection reports of each element on the bridge. Each element is divided into various condition states, representing differing degrees of deterioration. This information is used by the Pontis program to compute repair costs and benefits. DelDOT's use of the Pontis program will only address maintenance, repair, rehabilitation, or replacement recommendations based on element condition; the Pontis program will not address functional deficiencies. The Bridge Management Section runs a Pontis scenario, which optimizes and prioritizes repair recommendations for all DelDOT owned bridges. A list of the bridges will be generated which will include element quantities, recommended work, and cost estimates. The list will be screened for work that can be performed by the Districts, either by in-house forces or by structure maintenance contracts. The remaining bridges will be sent to the Bridge Design Section for investigation. This investigation will include a review of the inspection reports and a field review. Based on this list, bridges are added to the Bridge Design program, and are initiated as projects. Most Bridge Design projects are initiated through the Bridge Preservation Program.

2.3.1.2 Funding

The Bridge Design Section submits a prioritized list of deficient bridges to the Project Development Committee (PDC). High-priority bridges recommended for funding are identified by the Bridge Design Section, approved by the PDC, and forwarded to the Finance Division for inclusion in the CTP. Funds for all construction projects, including bridges, authorized through the CTP development process and the Capital Authorization Act are then allocated to specific projects by Finance. The number of projects authorized

depends on funds available and the costs of the individual projects.

2.3.2 PROJECT DEVELOPMENT PROJECTS

Improvements on Project Development projects may necessitate bridge improvements to conform with the new roadway geometry. It may be necessary to widen a bridge or add shoulders, sidewalks, railings, or other improvements to eliminate hazards at bridge sites even though the bridge may not have a high deficiency rating. The designer should evaluate what is needed, rehabilitation or replacement, giving full consideration to the deficiency ranking, the condition of the bridge, its remaining service life, and the purpose and goal of the project.

Improvements to road corridors may also require improvements to bridges within the corridor. These improvements are not necessarily related to bridge deficiencies; examples of these improvements are conforming with wider shoulders and improving grade profiles. The scope of bridge improvements on corridor management projects varies from an improvement to an existing structure to a new bridge on a new alignment.

2.3.3 EMERGENCY AND MAINTENANCE PROJECTS

Bridges may require emergency repair or replacement because of damage from floods or traffic impacts, or because of unexpected deterioration. Floods may result in washouts, scour, loss of riprap, and, in extreme cases, displacement of substructure units. The most common traffic-related damage includes damaged beams from overheight loads and damaged parapets and railings from traffic accidents. Emergency projects may also result from fire damage.

DelDOT's Bridge Management Section will usually identify emergency project candidates. Bridge designers may be required to assist in expediting the design or repair of the emergency projects. Once the damage is assessed and a design solution prepared, restoration may be performed by maintenance forces or by contract.

If the damage to a bridge is caused by an accident, the designer should request an accident report, which is forwarded to Finance and the legal section so a claim may be filed to recover the repair costs.

2.3.3.1 District Maintenance Forces

District maintenance forces can quickly make various types of repairs. However, they are not usually equipped to repair major damage. Designers may be required to provide details for the repairs. The repairs may be performed by district maintenance personnel or by contract. This work will be coordinated through the Bridge Management Section.

The Maintenance Districts have acquired and inventoried several modular steel truss-type panel bridges, known as Bailey or Acrow bridges, that can be erected to replace unsafe spans to keep traffic moving in emergency situations. Bridge Design is available to determine the number and configuration of panels and foundation supports needed. Scour protection for temporary bridges should be addressed as required on a case-by-case basis.

District maintenance forces have the ability to replace small bridges with pipe culverts. The designs for culvert placement or other technical assistance for these non-emergency improvements should be

coordinated with Bridge Design or Bridge Management. Permits are required for these projects as detailed in Section 2.9.4. The construction may be done by the District or coordinated with the local Soil Conservation District.

2.3.3.2 Contracts

For emergency projects, the normal procedure of advertising projects for bid may be waived. Early coordination with Contract Administration for these projects is required. District Maintenance may develop plans for which the District does not have adequate resources to construct. These contracts are typically developed in non-emergency situations and are advertised using normal Department procedures. A waiver must be approved by the Governor. A request for a waiver will be made only when the damage is such that traffic is severely impeded or the emergency constitutes a hazard to the public. If a waiver is approved, one of two methods may be used to select a contractor:

- Bids must be solicited from at least three contractors for the emergency work. It is not necessary to advertise the work in the normal bidding procedure. The lowest bid is submitted for approval.
- If a contractor is working in the area, the Department can negotiate with that contractor to repair the emergency condition under the existing contract as a change order.

2.3.4 PROJECTS FOR OTHER AGENCIES AND MUNICIPALITIES

Structures may be designed for other agencies, such as DNREC, cities or counties, upon request and authorization. The requesting agency may be responsible for the cost of the design and construction of these projects.

Municipalities are responsible for design, right-of-way acquisition, utility relocation and necessary permits for improvements to municipal bridges. If the improvements are funded by either state or federal matching funds, the design must be reviewed by the Department and the Department assumes construction management responsibilities. Refer to Policy Implement No. F-01 for more detail.

2.3.5 PEDESTRIAN AND HIGHWAY BRIDGE OVERPASSES

When authorized by the Department, local governments or private owners may construct pedestrian or vehicular bridges crossing State-maintained roads. All facilities must comply with Department standards including vertical underclearance requirements. Aerial easements must be coordinated with the Real Estate Section.

Pedestrian bridges owned by the Department will be maintained by the Department except for snow and ice control. Pedestrian bridges constructed over State roads by local governmental units or private owners must be inspected and maintained by the owners.

2.4 BRIDGE TYPE SELECTION

It is essential that the selection of the bridge type be made carefully to minimize redesign. Major structures require more scrutiny, such as value engineering and alternative designs. Major structures are those with a span of 300 feet [90 m] or more.

2.4.1 GUIDELINES

In selecting bridge types, the designer should consider these factors:

- Prestressed concrete beams should be considered for spans up to 90 feet [27 m].
- For spans greater than 90 feet [27 m] where beams can be transported to the site economically, concrete girders can be considered.
- For spans greater than 100 feet [30 m] where highway transportation must be used, steel girders should be considered.
- The use of precast concrete deck sections instead of cast-in-place deck will reduce construction time.
- Consider concrete girders for bridges over water.
- The use of weathering steel over waterways with low clearance is discouraged.
- Use concrete or weathering steel girders over electrified railways to eliminate the hazards associated with repainting.
- Limit the use of timber bridges to low-volume roads—roads with ADT under 750 and less than 10 percent trucks.

Refer to Chapter 7 for culvert material guidelines.

For many locations, a particular bridge type will be the obvious choice. However, where the choice is not obvious, alternative bridge types must be considered.

For non-major structures, an evaluation should be made to determine the best type of structure for a specific location. The designer should consider these factors:

- the initial construction cost;
- life-cycle costs;
- site-specific problems and conditions;
- traffic problems and detour costs;
- construction time and sequence;
- construction scheduling;
- potential maintenance problems and costs;
- environmental impact;
- durability;
- clearance requirements;
- aesthetics, especially in historic areas;
- public input;
- construction feasibility; and
- in-service inspectability.

In the design of major structures, a formal evaluation of the different types of bridges should be made to determine the optimum type for the specific location. The evaluation procedure is not fixed. The conditions encountered should be evaluated for each specific location. Figure 2-1 shows an example of an evaluation matrix. The evaluation procedure, the criteria used, and the weight given to each criterion must be adapted for the conditions encountered at each bridge site and be approved by the Bridge Design Engineer. The evaluation should include life-cycle costs if at all possible. Maintenance costs of the alternatives must be known or accurately estimated to provide accurate costs for comparison.

2.4.2 ALTERNATIVE DESIGNS

In a few cases, two alternative designs may be desirable for major structures, if approved by the Assistant Director, Design. Normally, one design will be for steel superstructure and the other for concrete. Other materials may be considered.

Figure 2-1
Example Evaluation Matrix

Criterion	Weight, α	Alternate Rating, R		
		A	B	C
Probable cost	0.40	10	9	8
Aesthetics	0.15	9	9	10
Constructibility	0.10	10	9	7
Maintainability	0.10	10	10	10
Environmental Impact	0.10	9	9	10
Durability	0.05	10	10	10
Inspectability	0.05	10	10	10
Rideability	0.05	10	10	10
Final Rating	**1.00**	**9.75**	**9.25**	**8.9**

Notes:

1. Rating (R) is a flexible scale from 1 (least desirable) to 10 (most desirable).
2. Final Rating = $\Sigma\ \alpha_i\ R_i$

2.4.3 VALUE ENGINEERING

The Federal Highway Administration (FHWA) requires value engineering for major projects — those with total estimated costs equal to or greater than $25 million on the National Highway System (NHS). The value engineering process is outlined in Policy Implement D-05.

2.5 DESIGN CONSIDERATIONS

In addition to the structural design specifications listed in Section 2.2, there are related areas that the designer must consider. These areas include historic requirements, maintenance of traffic, constructibility, provisions for inspection, and future widening.

2.5.1 DESIGN REQUIREMENTS

Bridge designs must meet AASHTO and DelDOT design practices and must comply with local requirements, such as historical, drainage and environmental regulations.

2.5.2 MAINTENANCE OF TRAFFIC

Unless the bridge is on a new location, maintenance of traffic during construction must be considered in any bridge design. Options for maintaining traffic include:

- detouring traffic to existing roadways so the bridge site can be closed to traffic;
- constructing a temporary bridge and detour; or

- using staged construction to allow traffic to be maintained on the portion not under construction.

Any restrictions on the closing of lanes must be included in the contract documents. Restrictions may include:

- special events, such as car races, the state fair, and long holiday weekends;
- school bus routes while school is in session;
- routes with heavy tourist traffic during summer months;
- daily work hour restrictions to accommodate rush-hour traffic; and
- city or county restrictions.

Intermediate contract milestones may be used on multi-staged projects. Restrictions that impede the contractor's ability to work on the project must be considered in the determination of working time. The need for restrictions should be determined early in the design phase.

2.5.3 CONSTRUCTIBILITY

One aspect of an economical design is that it can be constructed with conventional equipment by the contractors who typically bid Delaware projects. Designers should become familiar with current local bridge construction practices so most designs can be built with conventional equipment.

Designs should be reviewed to identify any of the following potential construction problems:

- Can the structure actually be constructed in accordance with the plans?
- How will each component will be constructed?
- Is the sequence of construction practical?
- How will forms and temporary sheet piles be removed?
- How will beams be transported and erected?
- How will utility relocations affect the schedule?
- How will traffic be maintained at each stage of construction?
- How will the contractor access the site?
- How will the stream flow be maintained?
- How will the work area be de-watered?

The constructibility review should include a simulation of construction sequencing requirements on the project. An on-site review may be necessary to ensure that all project elements are considered in the constructibility review. District, Quality and Construction personnel can assist with constructibility reviews.

2.5.4 DESIGN FOR MAINTENANCE

All bridges will eventually require maintenance and repair. Designers should consider how the bridge will be inspected, serviced and repaired when developing the designs and plans.

2.5.4.1 Maintainability

Designers should request the Bridge Management Section to comment on specific problems they encounter on the various types of bridges or specific details, such as bearings and joints, so that designs can be improved to minimize maintenance problems. The goal is to design a maintenance-free bridge, insofar as that is possible.

Some items critical to maintenance operations include the following:

- Joints
  - Design jointless bridges when possible.
  - Design joints to be sealed to prevent water ingress to the bearings and supports below the joint.
  - Avoid unusual joint details.
  - Provide joint components that can be maintained.
  - Minimize the number of expansion joints.
  - When finger joints are necessary, use drainage troughs.
- Provide for jacking to facilitate servicing, repairing, or replacing bridge bearings.
- Provide access for maintenance to all bridge components that are not accessible with an under bridge inspection vehicle (UBIV) or other means.
- Avoid superstructure details that trap dirt in the splices, joints, or other components that cause corrosion.
- Provide maintenance and operating manuals for movable bridges and other complex structures.
- Design deck drains to carry the water below the beams to prevent water damage from splash-back.
- Provide downspouts where deck drains would cause erosion or dump water on roadways from overpasses.
- Design deck drainage systems sufficient in size and with adequate slope to prevent clogging and ponding. Provide clean-outs. Avoid sharp bends that may cause clogging.
- Specify structural steel only where it can be repainted safely and economically; otherwise, use weathering steel or other low-maintenance materials.
- Protect stream channel banks from erosion and piers and abutments from scour.
- Provide for roadway runoff drainage and slope protection at abutments and wingwalls.
- Provide adequate vertical and horizontal clearances to prevent damage from traffic impacts.

The above items are not a comprehensive list but are intended to make the designer aware of the importance of maintenance considerations.

2.5.4.2 Provisions for Inspection

All bridges must be inspected regularly to ensure the integrity of the structure and its components. Bridge safety inspectors must be able to visually check all components of each bridge at arm's length. Designs should include a means of access to facilitate these inspections. Many bridges may be inspected from ladders. UBIV’s are effective for inspecting the outer portions of the superstructure, but do not provide access to the center beams on wider structures. Catwalks or other means of access may be necessary. Other considerations for inspections include the following:

- Provide shoulders wide enough to accommodate the UBIV without impeding traffic.
- List critical inspection items, such as fracture critical members, on the plans to advise bridge safety inspectors.
- Ensure that bridge components are accessible for inspection.

- Provide access with proper ventilation to the interiors of box girders for bridge safety inspections. Provide outlets for lighting or install an interior lighting system. Painting the interior of box girders white or another light color makes inspection easier.
- Design bridges so they can be inspected easily. Make openings and accesses wide enough and place them logistically so inspectors can get into them.
- Provide at least 4 feet [1.2 m] of underclearance on all bridges so the underside of the superstructure can be inspected with a boat. Tidal bridges can be inspected at low tide. However, provide at least 1 foot [0.3 m] of underclearance from high tide and 4 feet [1.2 m] from low tide.
- Make box culverts at least 4 feet [1.2 m] tall.

2.5.5 FUTURE WIDENING

When it is reasonably certain that the bridge will have to be widened in the near future, the substructure should be designed to accommodate the widening. The substructure on the median side of divided highways should be constructed with the original bridge because of the difficulty of constructing it under traffic.

2.5.6 CONTEXT SENSITIVE DESIGN

A context sensitive design simultaneously advances the objectives of safety, mobility, enhancement of the natural environment, and preservation of community values. All bridge projects should balance these objectives as appropriate for each location. Designers should use the flexibility within the *Road Design Manual* to achieve these objectives. Guidance is available from the FHWA *Flexibility in Highway Design* and the *Green Book*.

2.6 DESIGN LOADS

DelDOT adopts all AASHTO design loads and Delaware legal loads.

2.6.1 LIVE LOADS

Refer to the *AASHTO Specifications* for AASHTO live loads.

The above loadings are for load ratings. These loadings are not used for LRFD.

2.6.2 DEAD LOADS

Refer to Section 3.5, Permanent Loads, in the *AASHTO Specifications*.

2.7 BRIDGE LOAD RATING

The designer is required to calculate load ratings for all structures as a part of the design. This requirement applies to all structures—complete replacement, rehabilitation, or new bridge. Refer to Chapter 4 for load rating requirements. In addition to the design of the structure using HL-93, a minimum inventory rating of one will be achieved for all Delaware legal loads.

The calculated ratings must be included in the project notes of the contract plans. Refer to Figure 4-2 for a sample summary format.

2.8 PLAN PRESENTATION

Bridge construction plans shall conform to DelDOT standards.

2.8.1 DRAFTING STANDARDS

Standard line widths, lettering sizes, fonts, and symbols have been established to promote uniformity in the preparation of bridge design plans. Refer to the *CADD Manual* for general Department drafting standards. The use of these standards will ensure that plans are readable and easily interpreted by field and contractor personnel.

2.8.2 PLAN SHEET SEQUENCE

Bridge project plans will be assembled in the following order:

- Title Sheet and Index of Sheets,
- General Notes and Project Notes,
- Roadway Detail Sheets,
- Typical Sections,
- Plan and Profile Sheets,
- Bridge Sheets,
- Environmental Compliance Sheet,
- Erosion Control Plan Sheets,
- Utility Sheets (if applicable),
- Traffic Control Plan Sheets,
- Traffic Sheets,
- Right-of-Way Sheets (if applicable), and
- Quantity Sheets.

Bridge sheets are assembled in the order of construction—foundation details first, followed by columns, caps, etc. as follows:

- Bridge Plan, Section and Elevation
- Foundation Layout
- Pile Details
- Abutment Details
- Pier Details
- Bearing Details
- Framing Details
- Beam Details
- Diaphragm Details
- Camber Details
- Deck and Parapet Details
- Finished Deck Elevations
- Expansion Joint Details
- Approach Slab Details
- Miscellaneous Details
- Reinforcing Bar List
- Soil Borings
- Guardrail Details

Quantity sheets must provide a separate quantity summary for each bridge as well as a total project quantity summary.

Sheets may be combined on smaller projects to reduce the number of sheets. Except for the Bridge Sheets and Soil Borings, follow the *CADD Manual* for preparing all sheets.

2.8.3 BRIDGE SHEET PREPARATION

General instructions for completing bridge sheets are presented below. Specific plan presentation instructions are shown in each chapter, as appropriate.

2.8.3.1 General and Project Notes

General Notes include items that are applicable to all projects. The Quality section maintains a General Notes and Legend sheet. The most recent version of this sheet shall be used on all projects. General notes include such items as:

- specifications;
- erosion control site reviewer requirements; and
- other notes not addressed by the Standard Specifications.

Project notes include items that are specific or unique to the project. Bridge project notes include:

- design criteria;
- vertical and horizontal datum;
- hydraulic and scour data;
- design loading;
- portland cement concrete class and/or strength;
- reinforcing steel specification and grade;
- prestressing steel specification and grade;
- structural steel specification and grade;
- foundation information;
- removal items;
- utilities;
- traffic control references;
- the calculated load ratings (see Chapter 4); and
- other specific project-related notes.

2.8.3.2 Bridge Sheets

The number of bridge sheets will vary with the size and complexity of the structure. As a minimum, the bridge sheets will show:

- a plan view and elevation view;
- typical roadway and bridge sections;
- substructure details;
- superstructure details;
- railing and parapet details;
- reinforcement; and
- borings.

Normally, a separate sheet is used for each abutment and pier. Where piles are used, a pile layout should be provided for each substructure unit.

In addition, as appropriate, the bridge sheets will show the following:

- deck details including grades;
- joint details;
- camber diagrams;
- pouring sequence; and
- other details necessary for constructing the bridge.

2.8.4 MINIMUM-DETAIL PLANS

Minimum-detail plans are used for minor bridge projects such as bridge painting, bridge scour or emergency projects. These plans are typically on 8 ½”x11” sheets.

2.8.5 OTHER PLAN SHEETS

Refer to the *Project Development Manual* for instructions on the preparation of:

- title sheets;
- right-of-way plans;
- revisions and addendums; and
- as-built plans.

2.9 BRIDGE DESIGN PROCEDURES

2.9.1 INTRODUCTION

2.9.1.1 Designed-In Value

Designed-in value is quality: quality design; quality plans, specifications and estimates; quality construction methods; and quality construction results. Clear contract documents contribute significantly to quality construction. It is the designer’s responsibility to produce quality designs and clear contract documents.

The need for bridge improvements is generally greater than funds available to

meet those needs. Consequently, bridge designs must provide long-lasting structures that require limited maintenance with funds available for the project. There are several methods available to assist the designer in developing the best possible design. The principles of value engineering and life-cycle cost analysis are appropriate for evaluating alternatives for bridge locations, materials, components, and bridge types.

Value engineering is defined as the systematic application of recognized techniques that identify the function of a product or service, establish a value for that function, generate alternatives, and provide the function reliably at the lowest overall cost. While formal value engineering analyses usually are conducted by a multidisciplinary team, there are several value engineering principles that can be used by a designer during the design of a new bridge or rehabilitation of an old one. These include:

- developing good design procedures;
- adhering to procedures;
- determining the optimum solution to the problem—neither overdesigning nor underdesigning; and
- finding the highest value alternative over the life of the bridge, not the cheapest one.

Life-cycle cost analyses can also be applied to overall projects or project elements to assist in determining the best alternative. The following should be considered:

- design costs;
- construction costs;
- right-of-way costs;
- routine maintenance costs;
- periodic maintenance and rehabilitation costs;
- service life (typically 75 years);
- operating costs;
- accident costs; and
- user costs.

A quality design should provide a long service life with minimal maintenance. The designer should utilize the experience of the Department staff in preparing plan details by applying “lessons learned” from previous projects. All structures require maintenance, but some types of details require more frequent maintenance. The better details should consistently be used and further refined. This provides construction economy as well as minimal maintenance. Decisions made in the design phase will affect the cost of operation and maintenance of the facility for as long as it is in use.

A balance between available funds and optimal design must be achieved to provide the maximum benefits to the public. Through designed-in value, the optimum improvements can be accomplished for the available funds to provide a reasonable service life.

2.9.1.2 Documentation of Design

The design of each bridge must be documented to provide a permanent reference for future use. This reference may be used for answering questions during construction, bridge safety inspections, maintenance, and when major rehabilitation or reconstruction is necessary.

Documentation of the design should include the following:

- design computations;

- specific references to specifications;
- assumptions;
- specific design criteria;
- hydraulic and hydrology reports;
- foundation reports;
- quantity calculations;
- materials properties;
- computer printouts, if the design was prepared on the computer (including input, output, and the name and version of the software);
- design checklist; and
- any design exceptions.

The documentation should be kept in notebooks or folders for permanent storage in the contract file. By the final plan submission, consultant designers should submit all of the original documentation to the Bridge Design Engineer. Any changes to the documentation should be submitted by the time construction is completed.

2.9.1.3 Stewardship Agreement

The Stewardship Agreement between DelDOT and FHWA defines responsibilities for program, project, and process reviews. This agreement is updated annually; the most recent agreement should be referred to. Under this Agreement, all federal-aid projects will be reviewed and approved within DelDOT and not involve FHWA unless:

- the project is a 3R or 4R project on the Interstate System (NHS) and the estimated construction cost exceeds one million dollars;
- the project is a 4R project on the National Highway System (NHS) and the estimated construction cost exceeds one million dollars;
- the project is a bridge estimated to cost more than 10 million dollars; or
- the project is unique and the Department requests FHWA involvement.

Since project costs tend to escalate through the design process, all federal-aid projects on the NHS should be reviewed with the Bridge Design Engineer at initiation to determine whether FHWA should be involved.

A 4R bridge project shall be defined as a project involving complete bridge replacement or rehabilitation including complete deck replacement. A 3R bridge project shall be defined as a rehabilitation project that does not include complete deck replacement. These projects may include such items as deck overlay, joint replacement, cleaning and painting, seismic retrofit, scour countermeasure installation, and substructure rehabilitation.

2.9.1.4 Design Consultants

Design consultants are engaged to supplement in-house design staff and for design of unique structures. Consultants are selected through the Department's selection process. Design contracts are typically open-end contracts for a specified time period with an upset fee limit. The successful consultants are assigned projects for design as needed during the contract period. Assigned projects are scoped with the consultant, who then prepares a formal scope and cost proposal for the design. Upon approval of the cost proposal and funding, the Bridge Design Engineer issues a notice to proceed. Refer to the *Professional Services Procurement Manual* for more detail.

The Bridge Design Project Manager monitors consultant progress and conducts

periodic technical reviews on open-end consultant contracts, similar to in-house designs. Consultant contracts may include provisions for services to be provided during construction. These services may include reviewing shop drawings and assisting with field and design problems.

When consultants are assigned to corridor management projects, consultant contracts are administered by Project Development. The Bridge Design Section provides support to Project Development through technical reviews of structural designs. In addition to participation in the scoping of the project and ensuring that the plans meet Department requirements, the review includes ensuring that all of the documentation specified in Section 2.9.1.2 is provided.

2.9.2 PROJECT INITIATION

2.9.2.1 Design Responsibility

Nearly all bridge design projects include some roadway design. Usually, Project Development has the responsibility for plan preparation of roadway projects that include bridges. On smaller projects with minimal approach work, Bridge Design has responsibility for the design of roadway approaches.

When Project Development has the lead for the design, Bridge Design submits the bridge plans to Project Development for incorporation in the roadway plans at each stage of plan development.

2.9.2.2 Scoping Meeting

A scoping meeting is required for every project. The purpose of the meeting is to determine the limits of the project, define the scope of the project, and discuss the best way to design the project, e.g., widen on one side or both sides. The scope of the project is the basis for preparing the Construction Project Estimate. Scoping meeting participants are invited by letter from the Bridge Design Engineer. Representatives from Team Support, Construction, Maintenance, Environmental Studies, FHWA, Real Estate, Traffic, and Utilities are normally invited. Normally all new Bridge Design projects for a fiscal year are scoped at one time each year. The list of projects includes all of the bridges identified as outlined in Section 2.3.1.1. Large consultant bridge design projects are scoped individually, with the design consultant present.

If the scoping meeting is not held at the site, the Bridge Section must conduct a pre-scoping meeting at the site to become familiar with site conditions and formulate a recommended scope for discussion at the scoping meeting.

The designer must review the bridge safety inspection report in the bridge inspection file for the bridge in question to learn of any problems with the structure—structural damage, flooding, scour, etc.

A realistic project scope will help prevent unnecessary design changes and funding problems in the later stages of the process. When determining the project scope, especially for reconstruction and rehabilitation work, allow for potential deterioration between scoping and actual construction. The rate of deterioration is difficult to predict and the project may be delayed due to lack of funds, environmental issues, or other reasons. Additional inspections and cores may be necessary to assess the deterioration. Underestimating the scope can result in insufficient funding to meet the actual needs two to three years

in the future when the project is let to contract.

The designer is responsible for documenting the decisions made at the scoping meeting. A copy is sent to each of the participants of the scoping meeting as well as to those invited who did not attend.

Cost estimates needed to complete the Initiation Form are developed following the scoping meetingand submission of estimates from the relevant individual sections. Scoping for Project Development projects which include bridge work should have representation by the Bridge Design Review Engineer.

2.9.2.3 Project Initiation

A Construction Project Estimate Form is prepared by the designer to initiate the project. Completion of the form entails the following major items:

- name of project;
- project limits;
- a description of the improvement;
- a typical section; and
- an estimate of costs.

Costs must be estimated for the following on the CTP Cost Estimate Form:

- **Location and environmental studies** on Part I. [This is typically not included in bridge design projects; environmental studies costs are included in Part II.]
- **Preliminary engineering (PE)**. Use Part II of the form for estimating the costs of surveys and design engineering. Use 5 to 25 percent of the estimated construction costs to estimate PE costs. PE cost percentages vary inversely with the size of the project. PE costs as a percentage are typically lower on larger projects. The cost should be checked to see if it is reasonable. PE costs include salaries for Department personnel in Bridge Design, Materials and Research, Real Estate, Utilities, Traffic, Survey, Team Support, Quality, Environmental Studies and Hazardous Waste who work on the project.
- **Real estate**. The estimated cost of acquisition of any right-of-way needed for the project is estimated using Part III of the form.
- **Construction**. The estimated cost of construction includes all work that will be included in the construction contract plus utilities, railroads, traffic, construction engineering, and construction contingencies as shown on Part IV of the form. Innovative construction practices such as incentives/disincentives should also be included.
    - **Utilities**. The estimated cost of adjustments or relocations for utilities that qualify for reimbursement.
    - **Railroads**. The estimated cost of railroad force accounts for projects that impact a railroad. These costs are to reimburse the railroad for items such as flaggers, inspectors, and shop drawing review.
    - **Traffic**. The estimated costs of traffic items not included in the contract. These may include permanent traffic control such as installing signal loops and replacing existing signs, and temporary traffic control such as trailblazer signs on detours.
    - **Construction engineering (CE)**. The estimated costs for inspection, testing and contract administration. As with PE costs,

CE costs as a percentage of construction costs vary with the size of the project. Normally, 15% is used to estimate CE costs, but estimates ranging from 10 to 25 percent may be appropriate depending on the size of the project.

- **Construction contingencies** - an allowance for unforeseen items that were not included in the original construction estimate and for change orders during the construction phase. The allowance is normally 15% for large projects and 20% for small projects. Other amounts are to be approved by the Section Head.

The Bridge Design Project Manager should perform an overall review of the estimate to ensure that it is thorough and reasonable. The Bridge Design Project Manager and the Bridge Design Engineer sign the estimate form. A sample Construction Project Estimate form is shown in Figure 2-2. This form is submitted to the Assistant Director, Design for review and approval. A Project Number Request is then made by the Bridge Design Project Engineer. This request consists of entering project information into the computer, including the location, description of work, project justification, and estimated cost. This information is then reviewed by the Assistant Director, Design, and approved electronically. The Construction Project Estimate is then submitted to Finance by the Assistant Director, Design, for funding approval. After receiving a request for PE funding and the funding is approved, Finance prepares Form FS-1, Project Authorization & Funding, and sends it to the responsible section. If funding is not approved, Form FS-1 is returned to the Chief Engineer.

Form FS-1 must be received by the Bridge Design Section or the Bridge Management Section and the funding authorization entered into the computer before any design work can be started. A sample FS-1 form is shown in Figure 2-3.

A Combined Project Initiation and Project Number Request form provides the designer with information on the class of environmental documentation required and the level of public involvement. The Location and Environmental Studies Section is responsible for preparing the environmental documentation, but information from the designer may be required. The designer must comply with the public involvement specified on the form. A sample form is shown in Figure 2-4.

The classes of environmental documentation are as follows:

- Class I - environmental impact statement (EIS);
- Class II - categorical exclusion (CE); and
- Class III - environmental assessment (EA).

Most bridge design projects are Class II.

The Department's Project Development Process provides four improvement project classifications for public involvement purposes (A, B, C, and D), as described below:

- Level A are large projects that require both Location and Design public hearings.
- Level B projects require a single combined public hearing.

- Level C projects require less formal public involvement such as town meetings or workshops.
- Level D projects generally do not require public involvement.

2.9.2.4 Public Involvement

Contact between the public and DelDOT personnel is sought throughout the transportation planning process to obtain adequate public input. The Project Development Committee makes the determination for the type of public involvement needed for each project, depending on the complexity and impact of the project. The type of public involvement is shown on the Combined Project Initiation and Project Number Request Form. (See Figure 2-4.) As noted on the form, public involvement may include an opportunity to attend a public hearing, meeting or workshop, a plans-available review, or to respond to an "If" notice. Minor projects may have no public involvement. Contacts may also be made through Transportation Advisory Committees. The types of public involvement and responsibilities of the designer are shown below:

- **Public hearings**. A design public hearing is held after the location is approved, but before DelDOT is committed to a specific design. It is held to ensure that an opportunity is afforded for effective participation by persons interested in the specific location and major design features of the project. It provides a public forum for presenting views on major design features, including the social, economic, and environmental effects of alternate designs. A public hearing is required for major projects and for those that may have a significant impact. When the Department determines that a formal presentation is needed, the designer makes the presentation. All presentations, questions, and answers are recorded by a court reporter. The designer prepares an engineering report which must address all of the questions raised at the meeting with recommendations for resolving them. A copy of the engineering report is sent to FHWA only for projects that meet the criteria listed in the Stewardship Agreement (Section 2.9.1.3).
- **Public workshops**. Public meetings may be desirable to inform the public about highway proposals and to obtain information from the public that might affect the choice of alternatives to be considered. They also might identify critical social, economic and environmental effects to be considered. The designer normally conducts the meeting.

  More commonly used in bridge design is a plans-available public workshop. No formal presentation is made at a plans-available public workshop. Individuals are given the opportunity to ask questions specific to their interests about the project. The questions and answers are noted but not recorded verbatim. All questions must be addressed. A formal engineering report is not required, but the questions, answers, and recommendations must be documented.

Figure 2-2a
Sample Construction Project Estimate Form

CONSTRUCTION PROJECT ESTIMATE

Estimate No.

1. NAME OF PROJECT Br. 1-167 on Old Mill Road over Orchard Creek (Subdivision or Road Name) — New Castle (County)

2. LIMITS

Street Name or Road Number	From	To	Length
Old Mill Road (112)		Bridge	30'
		Approaches	360'
		Total	390'

3. ESTIMATE REQUESTED BY: Jiten Soneji (Name), for (check one) ☑ Project initiation ☐ Estimate only — Bridge (Section or Legis. Dist.)

4. DESCRIPTION OF IMPROVEMENT: Replace existing stone arch with precast concrete arch. Reconstruct the roadway approaches and place guardrail. Place riprap in the stream to protect the structure from scour.

4a. METRIC PROJECT Yes ☐ No ☑ If "No", submit English Unit Request form.
4b. PROJECT IN C.I.P. Yes ☐ No ☑ If "Yes", indicate year F.Y. ____

5. TYPICAL SECTION 2 - 12' Lanes, 2 - 4' Shoulders, 2 - 2' Barrier Offsets (This will require a design exception for shoulder width)

6. STATE MAINTAINED ☑ CITY MAINTAINED ☐ PRIVATE ☐ OTHER ☐ (specify) ____

7. COST ESTIMATE:

		from C.I.P. estimate form	Estimate prepared by:	Date:
a. Location and Environmental Studies (Part I to be included only for class "I" and "III" projects)	$0	Part I	Barry Benton	21-Oct-04
b. Preliminary Engineering	$215,000	Part II	Barry Benton	21-Oct-04
c. Real Estate	$12,000	Part III	Carolyn O'Donoghue	10-Nov-04
d. Construction *	$779,000	Part IV	Barry Benton	21-Oct-04
e. TOTAL ESTIMATED PROJECT COST	$1,006,000			

* Includes Utilities, Traffic, and C.E.

APPROVED
Valid thru ____ (Date) ____ (Assistant Director, Operations/Preconstruction/Planning) ____ (Date)

Figure 2-2b
Sample Construction Project Estimate Form

CAPITAL IMPROVEMENT PROJECT COST ESTIMATE
(Current Dollars)

Part I of V

Contract No. _____ Project Title: Br. 1-167 on Old Mill Road over Orchard Creek

PART I - LOCATION & ENVIRONMENTAL STUDIES (N/A)
(Part I to be included only for class "I" & "III" projects)

A. EIS/EA	$0	**E. HISTORIC**	$0
B. ARCHAEOLOGY	$0	1. Phase 1 (study)	
1. Phase I (study)		2. Phase 2 (study)	
2. Phase 2 (study)		3. Mitigation (by loc./env.)	
3. Phase 3 (mitigation)		4. Mitigation (by design)	yes ☐ no ☐
C. WETLANDS	$0	**F. NOISE**	$0
1. Delineation (study)		1. Studies	
2. Permit preparation		2. Mitigation (by design)	yes ☐ no ☐
3. Mitigation (design)		**G. OTHER**	$0
D. HAZARDOUS MATERIAL	$0	1.	
1. Phase 1 (study)		2.	
2. Phase 2 (study)			
3. Phase 3 (remediation)			

TOTAL COSTS FOR PART I (A thru G) $0

CONTINGENCY COSTS ☐ $0
(normally 5% for large projects and 10% for small projects - to be approved by section head) (~% used)

TOTAL LOCATION AND ENVIRONMENTAL STUDIES COSTS $0
(also total for Construction Project Estimate form line 7a)

Estimator: Barry Benton Date: 21-Oct-04

Figure 2-2c
Sample Construction Project Estimate Form

CAPITAL IMPROVEMENT PROJECT COST ESTIMATE
(Current Dollars)

Part II of V

Contract No. 0 Project Title: Br. 1-167 on Old Mill Road over Orchard Creek

PART II - PRELIMINARY ENGINEERING

A. SURVEYS	$14,000
1. Inhouse	$14,000
2. Consultant	
B. DESIGN ENGINEERING	$97,000
1. Design	$80,000
a. Inhouse	$80,000
b. Consultant	
2. Traffic	$0
a. Inhouse	
b. Consultant	
3. Real Estate Plan Preparation	$0
a. Inhouse	
b. Consultant	
4. Utilities	$17,000
a. Inhouse	
b. Consultant	$5,000
c. Test Holes	$12,000
d. Utility Company	
5. Materials & Research	
6. Borings	
7. Pile Load Tests	
8. Subdivision	$0
a. Inhouse	
b. Consultant	
c. Railroad P.E.	
9. Other (specify)	$0
a.	
b.	
C. ENVIRON. ASSESSMENT (use for class "II" projects only)	$80,000
1. Wetlands	$15,000
2. Hazardous Materials	
3. Noise	
4. Historic	$20,000
5. Archaeology	$45,000
6. Other	
a.	
b.	
Loc/Environ Estimator: Joy Ford Date: 19-Nov-04	
D. CONTRACT ADMINISTRATION	$4,000
Cont/Admin Estimator: Barry Benton Date: 21-Oct-04	

TOTAL COSTS FOR PART II (A thru D) $195,000

CONTINGENCY COSTS 10 (~% used) $20,000
(normally 5% for large projects and 10% for small projects - to be approved by section head)

TOTAL PRELIMINARY ENGINEERING $215,000
(also total for Construction Project Estimate form line 7b)

Estimator: Barry Benton Date: 21-Oct-04

Figure 2-2d
Sample Construction Project Estimate Form

CAPITAL IMPROVEMENT PROJECT COST ESTIMATE
(Current Dollars)

Part III of V

Contract No. 0 Project Title: Br. 1-167 on Old Mill Road over Orchard Creek

PART III - REAL ESTATE

A. REAL PROPERTY	$7,500	**C. ASBESTOS PROGRAM**	$0
1. Total acquisitions		1. Testing	
2. Partial acquisitions		2. Abatement	
3. Permanent easements	$1,500	**D. DEMOLITION**	
4. Temporary easements	$6,000	**E. APPRAISAL FEES**	
5. Wetland mitigation		**F. STAFF**	$1,600
Other (specify)		**G. SETTLEMENT**	$1,600
6.		**H. REAL ESTATE ENG.**	$0
7.		1. Consultant survey	
B. RELOCATION	$0	2. As acquired plans	
1. Residential		**I. CONDEMNATION**	
2. Business		**J. OTHER (specify)**	$0
Other (specify)		1.	$0
3.		2.	
4.			

TOTAL COSTS FOR PART III (A thru J) $10,700

CONTINGENCY COSTS 10 (~% used) $1,300
(normally 5% for large projects and 10% for small projects - to be approved by section head)

TOTAL REAL ESTATE COSTS $12,000
(also total for Construction Project Estimate form line 7c)

Estimator: Carolyn O'Donoghue Date: 10-Nov-04

Figure 2-2e
Sample Construction Project Estimate Form

CAPITAL IMPROVEMENT PROJECT COST ESTIMATE
(Current Dollars)

Part IV-A of V

Contra 0 Project Title: Br. 1-167 on Old Mill Road over Orchard Creek

PART IV -CONSTRUCTION

A. ROADWAY/APPROACH CONSTRUCTION	$147,500
1. Grading	
a. Excavation	
b. Borrow	
2. Drainage	
3. Traffic Lane Paving	
a. Surface	$92,500
b. Base	
c. Subbase	
4. Shoulder Paving	
a. Surface	
b. Base	
c. Subbase	
5. Erosion/Sed. Cont.	$20,000
6. Miscellaneous	
a. Curb/Gutter	
b. Sidewalk	
c. Guardrail	$20,000
d. C.P.M. Schedule	
e. Clear/Grubb	$15,000
Other (specify)	
7.	
8.	
9.	
10.	
11.	
12.	
B. STRUCTURE CONSTRUCTION	$358,000
1. New Bridge	$306,000
a. Type	Precast Concrete Arch
b. Size 1020 unit	s.f.
c. $/unit	$300
2. Old Structure Rem.	$52,000
a. Type	Stone Arch
b. Size 520 unit	s.f.
c. $/unit	$100
3. Retaining Wall	$0
a. Type	
b. Size unit	
c. $/unit	
4. Box Culvert	$0
a. Type	
b. Size unit	
c. $/unit	
C. PARK AND RIDE LOTS	$0
D. BERMS	$0
1. Noise Mitigation	
2. Visual Mitigation	

(refer to Capital Improvement Project form, Part IV - Continued)

Estimator: Barry Benton Date: 21-Oct-04

Figure 2-2f
Sample Construction Project Estimate Form

CAPITAL IMPROVEMENT PROJECT COST ESTIMATE
(Current Dollars)

Part IV-B of V

Contract No. _____ Project Title: Br. 1-167 on Old Mill Road over Orchard Creek

PART IV -CONSTRUCTION (CONTINUED)

E. LANDSCAPING	$0	**I. WETLAND MITIGATION**	
1. Beautification		**J. PROJ. UTILITY RELOCATION**	$0
2. Mitigation Related		1. Water	
F. MAINTENANCE OF TRAFFIC	$14,000	2. Sanitary Sewer	
G. PROJECT TRAFFIC ITEMS	$3,500	3. Electric	
1. Signing Structures		4. Telephone	
a. Overhead Bridges		5. Gas	
b. Cantilever Supports		6. CATV	
2. Roadway Lighting		7. Reimburseables	
3. Pavement Markings	$3,500	Other (specify)	
Other (specify)		8.	
4.		9.	
5.		Utilities Estimator: _____ Date:	
H. BUREAU OF TRAFFIC ITEMS	$2,000	**K. SUBTOTAL (A thru J)**	$525,000
1. Signing	$2,000	**L. CONTRACTOR'S CONST. ENG.** (normally 5% of K)	$26,000
2. Signals		**M. INITIAL EXPENSE** (normally 5% of K)	$26,000
3. Detour Signing			
4.			
5.			

Bureau of Traffic Estimator: _____ Date: _____

CONSTRUCTION COSTS (K thru M)		$577,000
CONSTRUCTION ENGINEERING (normally 15% of construction costs)		$87,000
CONTINGENCY COSTS - includes change order contingencies (normally 15% of Construction Costs for large projects and 20% for small projects)	20 (~% used)	$115,000
TOTAL CONSTRUCTION COSTS (Construction Costs + Construction Engineering + Contingency Costs) (use this total for Contruction Project Estimate from line 7d)		$779,000

Estimator: Barry Benton Date: 21-Oct-04

Figure 2-2g
Sample Construction Project Estimate Form

CAPITAL IMPROVEMENT PROJECT COST ESTIMATE
(Current Dollars) Part V of V

Contract No. 0 Project Title: Br. 1-167 on Old Mill Road over Orchard Creek

SUMMARY

PART I - LOCATION AND ENVIRONMENTAL STUDIES (Part I to be included only for class "I" and "III" projects)	$0
PART II - PRELIMINARY ENGINEERING	$215,000
PART III - REAL ESTATE	$12,000
PART IV - CONSTRUCTION	$779,000
TOTAL ESTIMATED PROJECT COSTS (also total for Construction Project Estimate from line 7c)	$1,006,000

_____ Date: _____
Project Manager

REVIEWED & CONCURRED IN:

_____ Date: _____
Section Head

NOTE: Concurring section heads are to forward the original estimate copy to the Director of Preconstruction with one estimate copy each to the Assistant Director of Design, Assistant Director of Design Support, and the Cost Estimate Engineer.

Figure 2-3
Sample FS-1 Form – Project Authorization and Funding

PROJECT AUTHORIZATION & FUNDING

STATE: Project No. 23-073-02; County SUSSEX; Maint. Rd. 00583; DP ____ Date ____

FHWA AUTHORIZATION: Project No. ESTP-S583(1); F.A. Rte. No. ____; Funding Q250 AREAS > 5,000; Item ____ Program Year ____

- PROJ. DEV. [x] Location/Environmental/Development
- DESIGN [ ] Survey & Plan Preparation
- REAL ESTATE [ ] Acquisition [ ] Relocation
- CONST. [ ] Advertise for Receipt of Bids [ ] Proceed on Agreed Price and/or Force Account Basis [ ] Proceed based on Proj. Agree.
- OTHER [ ] (Specify)

8/8/03

Effective Authorization Date ____

STATE ADMINISTERED ____ Div. Administrator ____ DATE ____

FTA: Grant No. ____ Approval Date ____

STATE RECOMMENDATIONS AND APPROVAL

Carl Ingram 8/4/03 — FIN. MAN. & BUDGET DATE; DIV. OF ADMINISTRATION DATE; HWY OPER./DTC/PRECON. DATE

Title: BR141 ON S583 OVER POLK BRANCH, NORTH OF BRIDGEVILLE

Request No. 1

Location/Description: REPLACE STRUCTURE WITH 20 FOOT SPAN PRECAST CONCRETE 3 SIDED FRAME

CE ____ %; Conting. ____ %; Sections 012

Authorization Requested For: INITIATE PRELIMINARY ENGINEERING

AUG 2003 RECEIVED Dept. of Transportation Bridge

"PRELIMINARY ENGINEERING IS CONSIDERED TO MEET THE REQUIREMENTS OF A CATEGORICAL EXCLUSION UNDER THE PROVISIONS OF 23 CFR 771.117 (C) (1)."

Notice To Proceed: JITEN SONEJI, BRIDGE DESIGN

		PROJ. DEV.(0)	DESIGN(1)	REAL ESTATE (2)	CONSTR. ENG.(3)	CONST.(4)	TRAFFIC (5)			TOTALS
Estimated Cost	State		18,000.00	11,000.00		113,800.00				142,800.00
	FHWA 80%		72,000.00			455,200.00				527,200.00
	FTA 0%									
	Other									
	Total		90,000.00	11,000.00		569,000.00				670,000.00
Previous Auth.	State									
	FHWA									
	FTA									
	Other									
	Total									
Authorized This Request	State		18,000.00							18,000.00
	FHWA		72,000.00							72,000.00
	FTA									
	Other									
	Total		90,000.00							90,000.00
Total To Date	State		18,000.00							18,000.00
	FHWA		72,000.00							72,000.00
	FTA									
	Other									
	Total		90,000.00							90,000.00

8/4/03

Form FS-1 State Fund/Line Category (Program) 77/00 Verified ____ Object AS AUTHORIZED Function 1000 PARTICIPATING

Figure 2-4
Sample Combined Project Initiation and Project Number Request Form

STATE	FEDERAL FHWA
PROJECT NO: 23-073-02	PROJECT NO: ESTP-S583(1)
FUNDING: 77/00 YEAR: 2005	FUNDING: Q250
COUNTY: SUSSEX DISTRICT: SOUTH	PERCENT: 80 %
MAINT RD. NO. S 00583	THIS PROJECT WILL BE ADMINISTERED UNDER THE FHWA STEWARDSHIP AGREEMENT

PROJECT TITLE:BR141 ON S583 OVER POLK BRANCH, NORTH OF BRIDGEVILLE

DETAILED LOCATION:

ROAD #583 NORTH-BOUND MILE POINT 0.43

DETAIL WORK DESCRIPTION & TYPICAL SECTION:

REPLACE STRUCTURE WITH 20 FOOT SPAN PRECAST CONCRETE 3 SIDED FRAME.

PROJECT JUSTIFICATION:

HEAVY SCALLING TO THE CONCRETE WALLS AND PIER WITH COMPLETE LOSS OF SE CTION IN AREAS. EVIDENCE OF SETTLEMENT.

Operations/Maintenance Cost per Year $ 0.00 Starting FY: 0000

Project Assigned to: BRIDGE DESIGN SECTION $ 569,000 Available for: CONSTRUCTION Phase

Authorization to Proceed: Carl Jonson (Capital Program Administrator, Finance) Date: 7/15/03

Environmental:

- ☐ Class I (EIS)
- ☑ Class II (CAT. EX) ☐(c) ☑(d)
- ☐ Class III (EA)
- ☑ NATIONWIDE 4(F) EVALUATION maybe REQUIRED

Public Involvement:

Level A:	Level B:	Level C:	Level D:
☐ Public Hearing	☐ Public Hearing	☑ Public Workshop	☐ No public involvement
☐ "If" notice	☐ Public Workshop	☐ Mtg. with adjacent Property owners	☐ Mtg. with adjacent Property owners
	☐ "If" notice	☐ Public Mtg. by Sponsor	

Planning Projects:

☐ Study Only (Environmental impacts and level of public involvement to be determined)

NOTES, COMMENTS MADE BY PROJECT DEVELOPMENT COMMITTEE:

Chairperson, Project Dev. Committee Date

ORIGINAL

2.9.3 DATA ACQUISITION

2.9.3.1 Topographic Survey

The designer must submit a Survey Request Form (Figure 2-5) to initiate the survey. Field surveys may be performed by a DelDOT survey crew or consultant surveyors, depending on the work load.

Field surveys for structures at new locations or replacement of existing structures normally include:

- Topographic detail.
- Cross sections of the roadway at the bridge approaches.
- Streambed cross sections that include:
    - streambed features,
    - extreme high water lines,
    - average high water lines,
    - current water level,
    - mean high tide (if applicable), and
    - mean low tide (if applicable).

    As many cross sections as are needed to accurately show the streambed should be taken. Any bridge over 25 feet [7.6 m] long will require extra cross sections downstream. Cross sections should be no farther apart than 25 feet [7.6 m]. The footing elevations should be noted on the face of the structure cross section.
- Establishing a benchmark on the structure to correlate all elevations. The benchmark will be tied to a National Geodetic Survey benchmark, if possible, or a U.S. Geological Survey benchmark. Assumed elevations are not used.

If the designer needs additional topographic data, it should be noted on the Survey Request Form.

2.9.3.2 Processing Survey Data

Topographic survey data are recorded electronically. Electronic data are processed in the following steps:

1. The Chief of Surveys downloads the electronic survey, creating a three-dimensional design file and an ALG file.
2. The bridge designer creates a surface from the design file using InRoads. The surface is saved to a DTM file.
3. The construction baseline is created by creating a COGO data file or interactively by using InRoads. The baseline is saved to the design file and ALG file.
4. From the alignment for the construction baseline and surface, cross sections and profiles of the existing ground are created using InRoads. They are placed in a new design file.
5. The designer creates the proposed profile using InRoads, adding it to the design file. Proposed cross sections are designed and added to the design file. (Creating a template of the roadway that can be copied from cross section to cross section will reduce the level of effort.)
6. A three-dimensional plan sheet and a profile sheet are created. Using the cross sections, the limits of construction are determined and placed on the plan.

Figure 2-5
Sample Survey Request Form

DelDOT Bridge Design Survey Request

County: New Castle **Road #:** _____ **Road Name:** _____
Bridge #: _____ **Bridge Type:** _____
Bridge Location: _____
NGS Benchmark (designation and elevation): _____
Existing Contract Numbers (for reference only): **1.** _____ **2.** _____ **3.** _____
Proposed Construction (tentative road and bridge): _____
Proposed Contract # _____ **Contract Name:** _____

1. PRIMARY ROADWAY DETAIL: (***starting from the centerline of the specified bridge***)
Note: Requested survey detail shall include **ALL** pertinent topographic, natural and manmade element detail that is contained within the limits specified below and as specified in subsections 2 and 3.

A. Ahead Stations: (Approximate Direction: N)
- From ___ ft to ___ ft at ___ ft intervals (widths: ___ ft left & ___ ft right)
- From ___ ft to ___ ft at ___ ft intervals (widths: ___ ft left & ___ ft right)
- From ___ ft to ___ ft at ___ ft intervals (widths: ___ ft left & ___ ft right)
- From ___ ft to ___ ft at ___ ft intervals (widths: ___ ft left & ___ ft right)

B. Back Stations: (Approximate Direction: N)
- From ___ ft to ___ ft at ___ ft intervals (widths: ___ ft left & ___ ft right)
- From ___ ft to ___ ft at ___ ft intervals (widths: ___ ft left & ___ ft right)
- From ___ ft to ___ ft at ___ ft intervals (widths: ___ ft left & ___ ft right)
- From ___ ft to ___ ft at ___ ft intervals (widths: ___ ft left & ___ ft right)

2. SECONDARY TANGENT DETAIL:(***detail from face of structural opening outward***)

A. Ahead Stations: (Approximate Direction: N)
- From ___ ft to ___ ft at ___ ft intervals (widths: ___ ft left & ___ ft right)
- From ___ ft to ___ ft at ___ ft intervals (widths: ___ ft left & ___ ft right)
- From ___ ft to ___ ft at ___ ft intervals (widths: ___ ft left & ___ ft right)

B. Back Stations: (Approximate Direction: N)
- From ___ ft to ___ ft at ___ ft intervals (widths: ___ ft left & ___ ft right)
- From ___ ft to ___ ft at ___ ft intervals (widths: ___ ft left & ___ ft right)
- From ___ ft to ___ ft at ___ ft intervals (widths: ___ ft left & ___ ft right)

3. ADDITIONAL REQUIRED SURVEY DETAIL

A. Structural Detail:
_____

B. Utilities:
_____

C. Miscellaneous:
_____

Requested By:_____ **Phone:** (302) 760- **Date:**

2.9.3.3 Survey Plans

A survey plan is prepared from the survey data.

2.9.3.3.1 Survey Plan Distribution

The designer should obtain copies of all existing plans and all available records or information. The designer sends a copy of the survey plan with the request for information about the project as follows:

- Existing right-of-way and deeds from Team Support.
- Existing utilities from the Utility Section.
- Structure borings from Materials and Research. (See Chapter Six for more details.)
- Roadway corings from Materials and Research.
- Pavement design from Materials and Research.
- Detour plan from Traffic.
- Existing transit facilities from the Delaware Transit Corporation (DTC).
- Existing wetlands or historic sites from the Environmental Section.
- Existing hazardous materials from Engineering Support.
- Existing or proposed bicycle or pedestrian facilities from Planning.
- Accident data from Planning.
- The CEE (Categorical Exclusion Evaluation) Report from the Environmental Studies Office. This report provides an assessment of the social, economic, and environmental impacts of each project and a checklist of required permits. The designer can, in some instances, reduce the complexity of permits by changing the design. Any questions concerning environmental requirements should be directed to the Manager of Environmental Studies. The designer must alert Environmental Studies of any changes from the design on which the CEE Report was based. Refer to Figure 2-6 for a sample CEE Report.

Traffic counts will be requested by Planning at the project initiation and sent to the Bridge Design Engineer.

2.9.4 PERMITS AND ENVIRONMENTAL CONSIDERATIONS

2.9.4.1 Responsibilities

The Bridge Design Section must provide the plans, drawings, Environmental Compliance sheet(s), and other necessary information to Environmental Studies and incorporate all permit and Section 106 requirements in the plans and specifications. The project's environmental documentation, i.e. Categorical Exclusion Evaluation (CEE) Report, Environmental Assessment (EA) or Environmental Impact Statement (EIS) outlines the environmental compliance issues. (See Section 2.9.4.8.) The most common level of documentation for bridge projects is the CEE Report; see Figure 2-6 for a sample.

The designer must be aware of the environmental requirements to develop prudent designs. Each agency with responsibilities for the environment has certain criteria that must be met. Designers should coordinate with Environmental Studies and attend their scoping meetings with environmental agencies to determine current criteria before the design is started. In addition to design considerations, construction time restrictions may be

implemented due to endangered species, migratory birds, and/or fisheries requirements. (See Section 2.9.4.4.4.)

At the semi-final plans stage, sufficient information should be provided to allow the Environmental Studies Section to begin the application for the necessary permits and to complete Section 106 coordination. The designer should minimize the environmental impact insofar as that is practical.

The Environmental Studies Section is responsible for obtaining any needed permits. Hydraulic studies prepared by the Bridge Design Engineer may be needed by them to obtain New Castle County floodplain permits. Calculations concerning the nature and extent of the impact (square foot area, volume and type of fill, etc.) will be required for all permits. The designer prepares Environmental Compliance (EC) Sheet(s) for each project that involves fill into waters/wetlands. The EC Sheet includes a plan view of the project with permanent and temporary impact areas delineated and the corresponding quantities tabulated. The EC sheet also lists any environmental constraints the contractor must comply with. Close coordination is needed between the designer and the Environmental Studies Section during project scoping, plan preparation, preparation of permit applications, as well as during their processing.

If at all possible, impacts to waters/wetlands should be avoided, to reduce impacts on the environment.

Contact Environmental Studies if copies of the complete requirements and regulations are needed.

2.9.4.2 U.S. Coast Guard Permits

The Coast Guard regulates all work over navigable waterways, which are very broadly defined as tidal waters, but can also be large non-tidal water bodies that support navigation. USGS Advanced Approval Authorization is available for federally funded projects that cross small tidal ditches and waterways with no significant navigation, including small recreational craft. FHWA grants advanced approval authorizations. Otherwise, a formal U.S. Coast Guard Section 10 permit review is required.

Under current law, most federally funded projects in the State requiring a Coast Guard permit can be handled through the advanced approval process. Projects totally funded by the State require a formal Section 10 review regardless of the navigational potential. Where marine navigation (in tidal or non-tidal waters) is involved, a formal Coast Guard permit is required, regardless of funding source. A formal Section 10 permit will address bridge clearance height and width to satisfy maritime requirements.

Maintenance work for structures crossing navigable waters do not require a formal Coast Guard permit; however, the Coast Guard must be notified 30 days in advance of any navigational restrictions/obstructions as per Specification 763522 – Coast Guard Specific Conditions. Reference to this specification must be included on the Environmental Compliance sheet or project plan notes.

2.9.4.3 Corps of Engineers (COE) Permits

Nearly any activity involving fill or excavation in wetlands and waters of the U.S. falls under the jurisdiction of the COE.

The COE also has jurisdiction over upland drainage ditches that connect to jurisdictional waters or wetlands. Many small impact and routine activities are processed through the Nationwide Permit Process. Large impact projects require an Individual 404 permit from the COE.

When designing any project, the following Standard Design Items must be considered:

- Low-flow channels should be considered for all projects and designed on a case-by-case basis.
- Recess culverts and riprap a minimum of one foot [0.3 m]. If unable to do this, provide justification to the resource agencies.
- Riprap in channel shall be backfilled in accordance with item no. 712531, Channel Bed Fill.
- Riprap on slopes should be backfilled with topsoil and seeded.
- For crossings involving multiple pipes, one pipe should be set 6 inches [150 mm] lower to provide for low-flow conditions.
- Upstream and downstream streambed elevations/widths should be matched with the installation of a new structure.
- Existing clearances will be maintained. The new structure shall not increase the backwater effect. In addition, there will be no increase in flows downstream of the structure.
- Measures shall be taken to assure that, on completion of the project, the stream flows through the structure and water is not lost under the structure or under the riprap.
- Mitigation/compensation needs will be assessed on a project-by-project basis.

2.9.4.4 Department of Natural Resources and Environmental Control (DNREC)

Different divisions and branches of DNREC have responsibilities for various permits and clearances.

2.9.4.4.1 Division of Water Resources

2.9.4.4.1a Wetlands & Subaqueous Lands Section

Subaqueous Lands Permits. This permit authority is required for any work affecting lands under waters of the State of Delaware, such as areas below the plane of ordinary high water. Jurisdictional stream corridors are identified as perennial and intermittent streams. (Ephemeral streams are not DNREC-jurisdictional.) Senate Bill 186 (S.B. 186) provides a formal permitting exemption for state, county and local municipalities for maintenance, reconstruction, or retrofitting work along non-tidal waterways. For projects consistent with this exemption, DelDOT provides project details and informs DNREC that the Department is proceeding under S.B. 186. Otherwise, a formal Subaqueous Lands Permit is processed.

401 Water Quality Certification. A DNREC 401 Water Quality Certificate (WQC) is a requirement when a project requires a COE Individual 404 Permit.

Wetlands Permit. A wetlands permit is required for any work affecting State jurisdictional wetlands. Regulated wetlands have been mapped and consist, for the most part, of tidal wetlands.

2.9.4.4.1b Water Supply Section

Well Permit Regulations. The Water Supply Section of DNREC must be notified of projects where it is anticipated that more

than 50,000 gallons per day (35 gallons per minute) will be pumped from below the water table. This permit coordination is the responsibility of the construction contractor.

2.9.4.4.2 Division of Soil and Water Conservation

2.9.4.4.2a Sediment and Stormwater Management Section

Any project that requires disturbing the ground cover for an area greater than 5,000 ft^2 [464.5 m^2] must conform to the requirements for this program. Administration of this program has been delegated to DelDOT. All construction plans are reviewed and approved through the Department's Stormwater Engineer.

2.9.4.4.2b Delaware Coastal Management Program

The Coastal Zone Management (CZM) Program Consistency requires a review and consistency statement for all water-related construction activities in Delaware's Coastal Zone that require a COE Individual 404 Permit. In addition, CZM has requested copies of all Nationwide Permit application submissions to allow them a 30-day opportunity to comment. All of Delaware is included in the Coastal Zone.

2.9.4.4.3 Division of Parks and Recreation

A 6(f) review and approval is required for any use of lands, easement, or acquisition from State Park-Recreation-Wildlife lands that were purchased or are maintained with Federal Land and Water Conservation Funds. The 6(f) review is similar to a 4(f) review. (See Section 2.9.4.7.) DNREC maintains a list of the 6(f) resources.

2.9.4.4.4 Division of Fish and Wildlife Restrictions

The protection of endangered fish and wildlife are the responsibility of the DNREC Division of Fish and Wildlife, Natural Heritage Program in addition to the U.S. Fish & Wildlife Service. Compliance with agency regulations often involves the implementation of construction restriction windows. Some of the most common restrictions involve the following:

- Restrictions on construction work during spawning seasons must be considered for structures over waters supporting anadromous fish passages (usually limited to tidal waters, state-wide). The restriction window usually extends from March 1 to May 30th, but varies with species.
- Construction restrictions in New Castle County for projects that occur in and adjacent to bog turtle habitat may extend from March 1 through November 30.
- New Castle County has several designated trout streams, which are stocked yearly. Work in these waters is restricted during the spring trout season, which usually extends from April 1 through June 1. DNREC maintains the list of trout streams.
- In Sussex County there are three areas in which the Delmarva Fox Squirrel (DFS) is protected: the Assawoman Wildlife Area, Prime Hook National Wildlife Refuge, and the Nanticoke River site. Maps of these areas are available from the Environmental Studies Section. Work within or adjacent to a DFS habitat may result in a construction restriction typically extending from January 1 though May 15.
- Bald eagle nesting areas retain protection under the federal

Endangered Species Act. All habitat within a 750 foot [228.6 m] radius around the nest is protected. In general, activities within this zone are not permitted during the nesting season (December 15 to July 1); other activities are strictly limited the rest of the year. All habitat within a secondary protection zone, defined as the area from 750 to 1,320 feet [228.6 to 402.3 m] in radius around the nest, is protected; in general, activities within this zone are restricted during the nesting season of December 15 to July 1. Some activities are not permitted any time of the year. Determinations of allowable activities are typically evaluated on a case-by-case basis.

- Bridges will need to be surveyed for the presence of nesting migratory birds, disturbance of which is regulated by the federal Migratory Bird Treaty Act (MBTA). If a survey detects a substantial number (ten or more) of active nests, impacts should be avoided by performing construction activities from August 1 to 15 April. If construction cannot be performed in this time period, a deterrent such as mesh netting should be used to block access to nesting sites on the underside of the bridge. The material would need to be in place no later than April 15. The underside of the bridge would need to be fully encapsulated. The material should be left in place until construction begins.

Prohibition of activities in waterways due to fish or wildlife should be checked. Designers should review the CEE Report to find the exact time and activity restrictions, or contact Environmental Studies for details. Special provisions are required to alert contractors to these restrictions. They must also be considered in determining contract schedule timing.

2.9.4.4.5 Division of Air and Waste Management

Potential hazardous material sites that have been identified in the project area must be coordinated through the Waste Management Section. They will make the final determination of mitigation required for hazardous materials. The designer must weigh the cost of cleanup against any alternative locations for the project alignment.

2.9.4.5 Section 106 Of The National Historic Preservation Act

Section 106 of the National Historic Preservation Act (NHPA) of 1966 is required for any project with federal agency involvement, including but not limited to funding from FHWA or permitted activities from the Army Corps of Engineers (ACOE) and United States Coast Guard (USCG). Section 106 requires DelDOT to take into account the effects of their projects on historic properties which may include structures, objects, districts, landscapes, and prehistoric and historic archaeology.

Besides the bridge structure itself, a project may affect adjacent historic properties, districts or historic or prehistoric archaeological sites. Effects may be physical, visual or audible.

The following are the regulations of Section 106:

Initiation - DelDOT must initiate the project with the Delaware State Historic Preservation Office (DE SHPO) and any consulting and/or interested publics

requesting involvement or identified by the DE SHPO.

Identification of Historic Properties - In consultation with the DE SHPO, DelDOT determines whether properties in the Area of Potential Effect (APE) fifty years or older are listed on or eligible for the National Register of Historic Places. A listing of Delaware's National Register eligible bridges under DelDOT jurisdiction can be found in *Delaware's Historic Bridges: Survey and Evaluation of Historic Bridges with Historic Contexts for Highways and Railroads*.

If DelDOT finds that no historic properties are present or affected by the project, it provides documentation of "No Historic Properties Affected" to the DE SHPO for a thirty day comment period. If DelDOT finds that historic properties are present, then, in consultation with the DE SHPO, DelDOT determines if the project might result in an adverse effect to the historic property.

Assess Adverse Effects - In consultation with the DE SHPO, DelDOT makes an assessment of adverse effects on the identified historic properties. If all parties agree that there will be a "No Adverse Effect", DelDOT submits to the DE SHPO formal "No Adverse Effect" documentation. After a thirty day comment period, DelDOT may proceed with the project with any agreed-upon conditions.

Resolve Adverse Effects - When there is an Adverse Effect, DelDOT must begin consultation to seek ways to avoid, minimize or mitigate the adverse effects. On behalf of the federal agency, DelDOT must consult with the SHPO, and other interested or consulting parties. Consultation usually results in a Memorandum of Agreement (MOA), which outlines agreed-upon measures that the agency will take to avoid, minimize or mitigate for the adverse effect.

Bridge design projects should be designed to avoid adverse effects when possible. Adverse effects are typically caused by significant alterations to an eligible bridge's historic design, materials, workmanship, location and function. Prompt and ongoing coordination with Environmental Studies staff is critical in the design process to help achieve a "No Adverse Effect" determination.

Further information concerning the Section 106 process and recommended preservation treatments for historic bridges can be found in DelDOT's *Historic Bridge Manual*.

2.9.4.6 New Castle County

Any project in a regulated flood plain (100-year flood) in New Castle County must receive New Castle County Floodplain approval. Refer to Chapter 3 of this manual. The Bridge Design Section must prepare the hydraulic report for submission by the Environmental Studies Section. The report must include the professional engineer's stamp for submission.

2.9.4.7 Federal Highway Administration

If federal funds are used, FHWA approves the following:

- project environmental documentation for categorical exclusions, environmental assessments, and environmental impact statements;
- Section 4(f) evaluations of the National Transportation Act; and
- USCG advance approval requests.

FHWA assumes the role as the lead federal agency for NEPA compliance.

Section 4(f) refers to the definition and discussion in Section 4(f) of the National Transportation Act, which provides additional protection for cultural resources, active public recreation areas, and public wildlife areas. If the project impacts 4(f) properties, the designer must ensure that the proposed design is the only feasible and prudent alternative.

2.9.4.8 Environmental Documentation

The Department must comply with federal, state and local environmental laws, regulations, and executive orders. Each project initiated by the Department must be evaluated to determine the appropriate level of environmental compliance and subsequent documentation required. The three levels for project compliance/environmental documentation are described below.

2.9.4.8.1 Categorical Exclusion

Categorical exclusions are actions or activities which meet the definition in 23 CFR 771.117(a) and, based on FHWA's past experience, do not have significant environmental effects. The Categorical Exclusion Evaluation (CEE) Report prepared by the Environmental Studies Section provides an assessment of the social, economic, and environmental impacts of each project, and a checklist of environmental compliance issues. This report is a very preliminary assessment of compliance issues based on the initial project initiation and should be used only as a guide. It is very important that the designer coordinate with Environmental Studies personnel from project inception to ensure the proper baseline surveys (i.e., wetland delineations, archeological surveys etc.) are completed early in the project development process. This is integral to successful plan development. Any questions concerning environmental requirements should be directed to the Environmental Studies Section. The designer must alert Environmental Studies of any changes from the design on which the CEE Report was based. See Figure 2-6 for a sample CEE Report.

2.9.4.8.2 Environmental Assessment (EA)

The primary purpose of an Environmental Assessment is to help FHWA and DelDOT decide whether or not the preparation of an Environmental Impact Statement is necessary. If there is sufficient evidence and analysis to conclude that construction of a project will not result in <u>significant</u> impacts on the environment, FHWA will prepare a Finding of No Significant Impact (FONSI).

2.9.4.8.3 Environmental Impact Statement (EIS)

Environmental Impact Statements are required for projects that <u>significantly</u> affect the environment. Projects such as a new controlled access freeway or a highway project of four or more lanes at a new location normally require an EIS.

Figure 2-6a
Sample CEE Report

CATEGORICAL EXCLUSION EVALUATION

FOR

BRIDGE 160
on Maryland Avenue over Little Mill Creek
State Contract Number: 22-074-01
Federal Aid Number: EBHN-N336(4)

Prepared by:

Patrick Carpenter
Environmental Studies Office

Date: February 27, 2002

Figure 2-6b
Sample CEE Report

CATEGORICAL EXCLUSION EVALUATION
(FOR PROJECT DEVELOPMENT COMMITTEE)

Bridge 160
On Maryland Avenue over Little Mill Creek
State Contract Number: 22-074-01
Federal Aid Number: EBHN-N336(4)

Background, Need, and Scope

The proposed project involves the partial replacement and widening of Bridge 160 on Maryland Avenue over Little Mill Creek. Bridge 160 is south of Elsmere in New Castle County, and is adjacent to Canby Park. See the attached map for further assistance.

Bridge 160 is a one-span, 58'-long, 62'-wide reinforced concrete closed spandrel arch bridge built in 1931. The bridge is supported on concrete abutments with u-shaped wingwalls, and is finished with concrete balustrades. Sections of the upstream balustrade were lost and replaced in kind in 1983. The bridge is historically significant as an example of its type. In 1998, this location had an ADT of 17,058 and in 2017 the ADT is projected to be 16,348, with a typical section of 4-12' lanes and 5' sidewalks.

Currently, Bridge 160 is ranked 169 on the bridge deficiency ranking, has a sufficiency rating of 73, and is considered functionally obsolete. The primary problem is delamination and scour on the arch. Bridge maintenance files indicate several locations of delamination, spalls, and scour.

Proposed work includes the partial replacement and/or widening of the existing arch. On the upstream side, the arch will be removed and reconstructed between the abutments and five feet into the structure. A portion of the spandrel walls and parapets will be replaced on the upstream elevation. The remainder of the existing arch will be rehabilitated. Roadway approaches will be milled and overlayed. In addition, riprap will be placed in the stream channel for scour protection.

Moreover, it has been mentioned that the bridge might be widened to match the width of approaches. Currently, the bridge location is narrower than both its approaches, as there are no shoulders on the bridge deck. In order to realign the bridge with the roadway by adding shoulders, Bridge 160 might be widened by a least 8-feet.

Associated Impacts

Since Little Mill Creek is non-tidal, and based on the limited scope of work in the water, the improvements will be consistent with the provisions of The Delaware Code Chapter 72, Section 7217 as amended by Senate Bill 186 and processed through Delaware Department of Natural Resources and Environmental Control (DNREC). Similarly, with federal funds, the Federal Highway Administration (FHWA) can recommend the project for authorization under an Army Corps of Engineers (ACOE) Nationwide Permit 23 (NWP 23, Categorical Exclusion). The

2

Figure 2-6c
Sample CEE Report

conditions of NWP 23 stipulate that the project's impacts to waters/wetlands must be considered minor. The regulatory interpretation of minor, in this case, is less than one-third acre. This one-third acre must be inclusive of all disturbances. This includes filling, excavating, and clearing within jurisdictional waters and wetlands. Project impacts exceeding the 1/3-acre threshold will require mitigation. Based on the proposed scope, exceeding this 1/3 limit is unlikely.

Permit applications will be made with semifinal plan details. For scheduling purposes, at least 3 months should be built into the schedule, prior to contract award, to allow for permit arrival from the ACOE and DNREC regarding wetland and related issues.

The bridge site is mapped as Floodway Zone AE (FEMA, Flood Insurance Rate Map, Panel 152 of 450, map#: 10003C0152 G, revised October 6, 2000). A floodplain permit will be required from the New Castle County Department of Public Works. Bridgework should not reduce the flood conveyance area. Hydrologic calculations, which prove that the project will not decrease the storage capacity of the floodplain and not increase the 100-year floodplain elevation will have to be provided to New Castle County in the floodplain permit application. The hydrologic study will be prepared by DelDOT's Bridge Design section. Impacts upon related hydrology and local water quality will be managed and controlled with the implementation of a proper sediment and erosion control plan. Provisions must be made to handle temporary construction impacts upon the watershed. Permanent hydrological effects are not expected. Authorization will also be required from the ACOE under the 404 Program of the Clean Water Act. A DNREC subaqeous permit will not be required since the creek is non-tidal. Additionally, a scour study may be conducted to determine extent of scour.

The Delaware Natural Heritage Program (DNHP) has been contacted, and did not identify the presence of state or federally rare or endangered species within the project impact area. Therefore, no impact to rare or endangered species is anticipated under the proposed project.

Local residents may experience a temporary increase in noise levels during and after the construction phase. Air quality in the vicinity may also be degraded during construction, but this is considered insignificant. Overall, no long term local or statewide air quality effects or permanent noise amplification should occur.

Traffic will be maintained throughout the project. Most of the work can be completed by diverting the traffic to one lane. No long-term effects on traffic patterns are expected due to this project.

Based on the current scope and existing conditions, utility relocation and adjustments to sewer, water, electric, telephone, cable, and gas will not be necessary.

At this point, a take (permanent easement) is planned, in the adjacent Canby Park. A take from the park will most likely require a 4F.

Environmental Justice

The project has been reviewed for environmental justice issues. According to census data within a ½ mile radius from the bridge, there are high percentages of minorities and low income households in the area. In census tract 100030129001, southeast of the bridge, 59.4 percent of the residents are

3

Figure 2-6d
Sample CEE Report

minorities and 20.4 percent are on the poverty level. Census tract 100030125002, just west of bridge, shows 17.2 percent minorities and 18 percent considered at poverty levels. The census data indicates that the other tracts have smaller percentages of poverty and minority residents.

Although there is a high percentage of minorities and poverty levels near the bridge location, the project should not adversely affect these populations. The project only consists of work on the bridge itself. No long-term affects associated with the project are expected. Nevertheless, minority and low-income residents should be encouraged to attend public workshops to insure their concerns are included. Moreover, since local populations may walk along this corridor to the bus stop, work, or to stores, the project should not disturb pedestrian access. See attached census data for more details.

Historic Resources

Coordination with the Delaware State Historic Preservation Office (SHPO) will be essential during the planning process to assure compliance with Section 106 of the National Historic Preservation Act. The bridge has been determined eligible for the National Register of Historic Places by Delaware's Historic Bridges: Survey and Evaluation of Historic Bridges conducted by Lichtenstein Consulting Engineers, Inc. in 2000. Since federal funds are being used and the bridge is eligible, DelDOT as stipulated by Section 106, will consult with the Delaware SHPO. Of particular concern is the bridge itself, and the area on the north side, within Canby Park, that is the location of a former mill.

Bridge 160 is significant as an example of its type. Specifically, the bridge is significant because of its connection to Richardson Park (now Canby Park) and its design based on that association. During the first half of the 20th century, bridge arches were generally considered the most appropriate bridge types for park settings because of their aesthetic value. This was obviously apparent to the New Castle County Engineer when he designed the bridge. On November 21, 1931, the opening of the park and bridge was celebrated with speakers and a parade.

Although the bridge is eligible for its design, there have been some notable changes. Specifically, the upstream balustrade was replaced in 1983. In addition, the original light posts have been removed. Despite these changes, the bridge retains its original shape and design features, and thus still qualifies for the National Register.

In addition to the bridge, Canby Park may contain potential archaeological sites. According to historic maps, a gristmill and sawmill were located north of the project area. Although the mill sites are probably clear of the project area, access should be maintained as close to the bridge as possible. Other archaeological sites are possible near the bridge, but any sites were most likely disturbed from previous road and bridge construction. Further survey work may be necessary to verify the presence or absence of sites.

Currently, DNREC is completing a cultural resource survey of Canby Park to determine if it is eligible for the National Register. As part of the survey, archaeology will be conducted in portions of the park. This archaeology survey should reveal the extent or absense of sites. Nevertheless, its seems likely that this bridge project will not affect archaeological sites, if access and construction can be maintained as close as possible to the bridge. Nevertheless, coordination with SHPO on this matter will still be necessary to determine the amount, if any, of archaeological survey work.

4

Figure 2-6e
Sample CEE Report

Whether or not the park is proven eligible, the proposed take might require a 4f, since this will occur in a public park.

In summary, Bridge 160 is eligible for the National Register of Historic Places. Based on the proposed plans and the bridge's eligibility, this project may result in an adverse effect. Furthermore, a take is planned for the adjacent park, thereby most likely requiring a 4F. Coordination with SHPO will be ongoing to determine the nature of the affect on the bridge and possible archaeological sites.

Based on the forgoing analysis, it can be concluded that the project, pending the extent of the finalized scope of work, will have no significant adverse effect onto the social, economic, or environmental conditions of the area. Continual civic associations or working group consultation is required. Scope of work is subject to future workshops, so this analysis might change. Based on the submitted checklist provided on the following page, it is recommended that the project be classified as a Class II, Categorical Exclusion per 23 CFR 771.117 (d) (1) & (3).

CATEGORICAL EXCLUSION EVALUATION

Partial replacement and widening
Bridge 160, over Little Mill Creek on Maryland Avenue
New Castle County
State Contract No. 22-074-01
Federal Aid No. EBHN-N336(4)

ADVERSE IMPACTS/EFFECTS	None	Possible	Probable	Comment
Right-of-Way Requirements				
A. Private	X			
B. Public			X	Canby Park
C. 4(f)			X	Canby Park
D. 6(f)	X			
Relocations				
A. Homes	X			
B. Businesses	X			
C. Non-Profit	X			
Social Impacts				
A. Local	X			
B. Regional	X			
Environmental Justice				
A. Minority	X			
B. Low-Income	X			
Economic Impacts				
A. Local	X			
B. Regional	X			
C. Statewide	X			

5

Figure 2-6f
Sample CEE Report

Cultural Resources				
(Listed, nominated, eligible)				
A. National Register			X	Eligible bridge, possible archaeological sites
B. State Listing	X			
C. Other		X		Park may be determined eligible by DNREC/SHPO
Air Quality				
A. Local		X		Temporary
B. Statewide	X			
Noise				
A. Residential		X		Temporary
B. Commercial	X			
C. Sensitive Receptors	X			
D. Other	X			
Hazardous Waste	X			
Water Quality				
A. Surface Water	X			
B. Ground Water	X			
Hydrological Impacts				
A. Stream relocation	X			
B. Stream channelization	X			
C. Stream stabilization	X			
D. Flood Plain	X			
Fish & Wildlife				
A. Endangered Species	X			
B. Habitat	X			
Wetlands				
A. Project Area	X			
B. Up or Down Stream	X			
Land Use				
A. Direct	X			
B. Secondary	X			
Natural Resources				
A. Farm Lands	X			
B. Woodlands	X			
C. Conservation Areas	X			
D. Coastal Zone	X			
Modal Choice				
A. Pedestrian	X			
B. Bicycle	X			
C. Mass Transit	X			

6

Figure 2-6g
Sample CEE Report

Access				
A. Maintenance of Traffic			X	Temporary
B. Elderly	X			
C. Handicapped	X			
D. Children	X			
E. Pedestrians		X		
F. Bicyclists	X			
G. Public Transit & those	X			
who depend upon it				
Permits				
A. ACOE			X	Nationwide Permit #23
B. Coast Guard	X			
C. DNREC			X	Senate Bill 186
D. County			X	New Castle County Floodplain permit
E. City or Municipality			X	Public Workshops
Categorical Exclusion Recommendation _____ *per 23CFR771.*				
Concurrence: Federal Highway Administrator: _____				
		Division Administrator		*Date*
Comments: _____				

Figure 2-6h
Sample CEE Report

BRIDGE NO. 1-166-[illegible] DATE: [illegible]/[illegible]/[illegible] ROLL NO. J-[illegible]

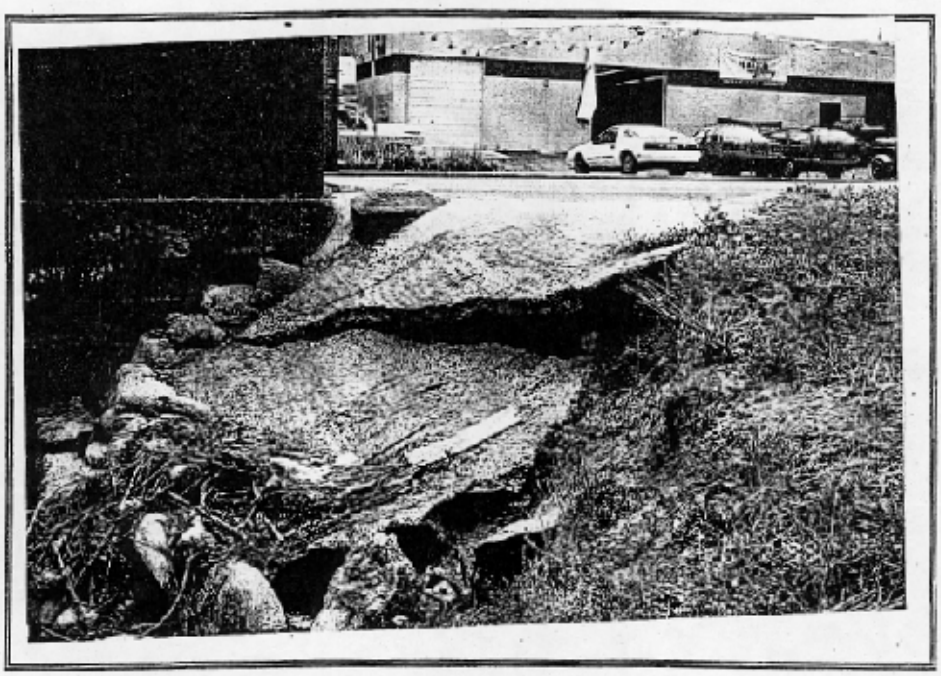

PHOTO # 3d

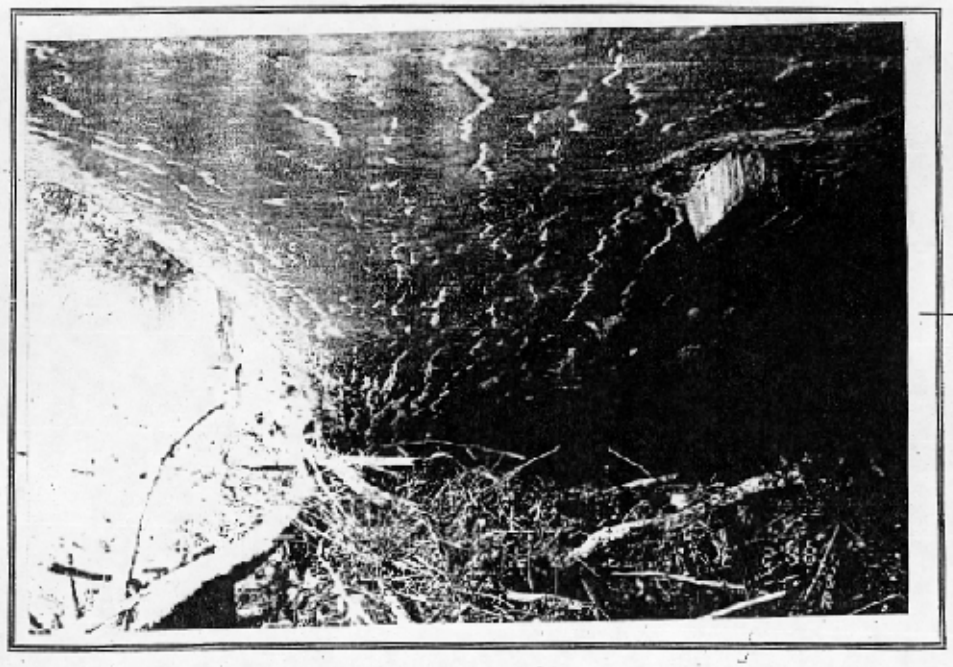

PHOTO # 29

Figure 2-6i
Sample CEE Report

BRIDGE NO. 1 - 1[illegible] - 33[illegible] DATE: 6 / 2 / 98 ROLL NO. 5-[illegible]

PHOTO # 32

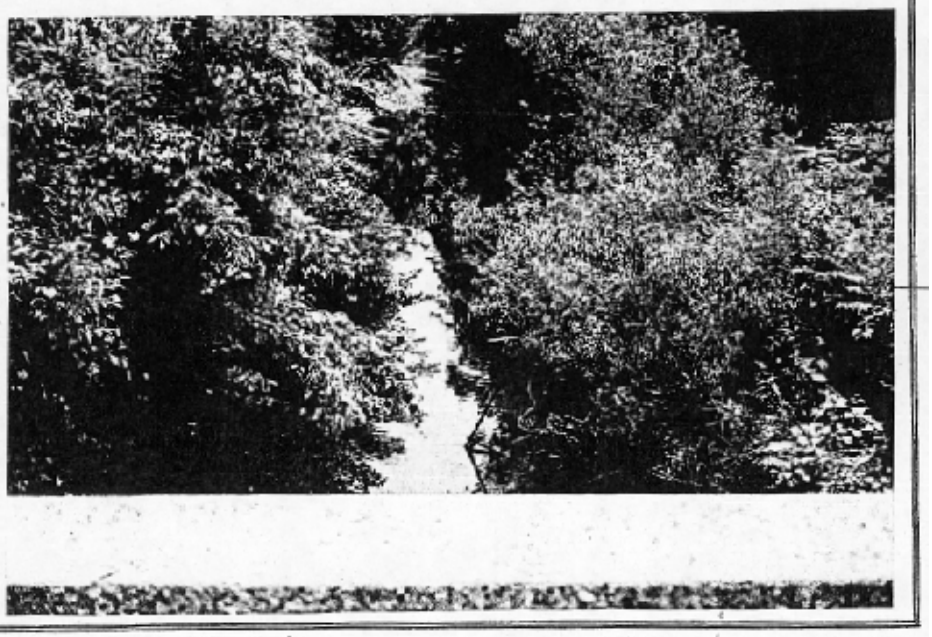

PHOTO # 31

Figure 2-6j
Sample CEE Report

BRIDGE NO. 1-160-33 DATE: 6/2/98 ROLL NO. J-Cu

PHOTO # 34

PHOTO # 33

Figure 2-6k
Sample CEE Report

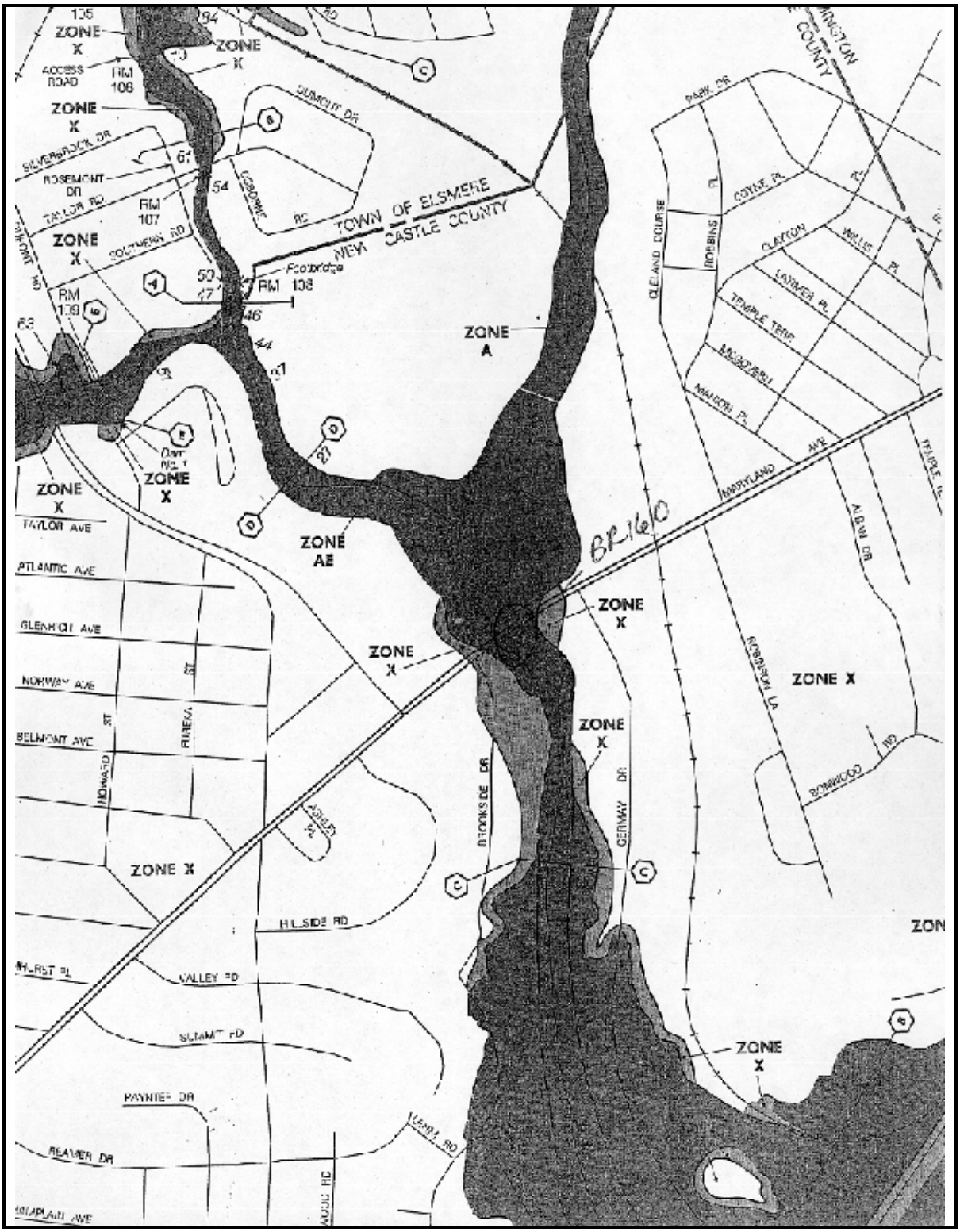

Figure 2-6l
Sample CEE Report

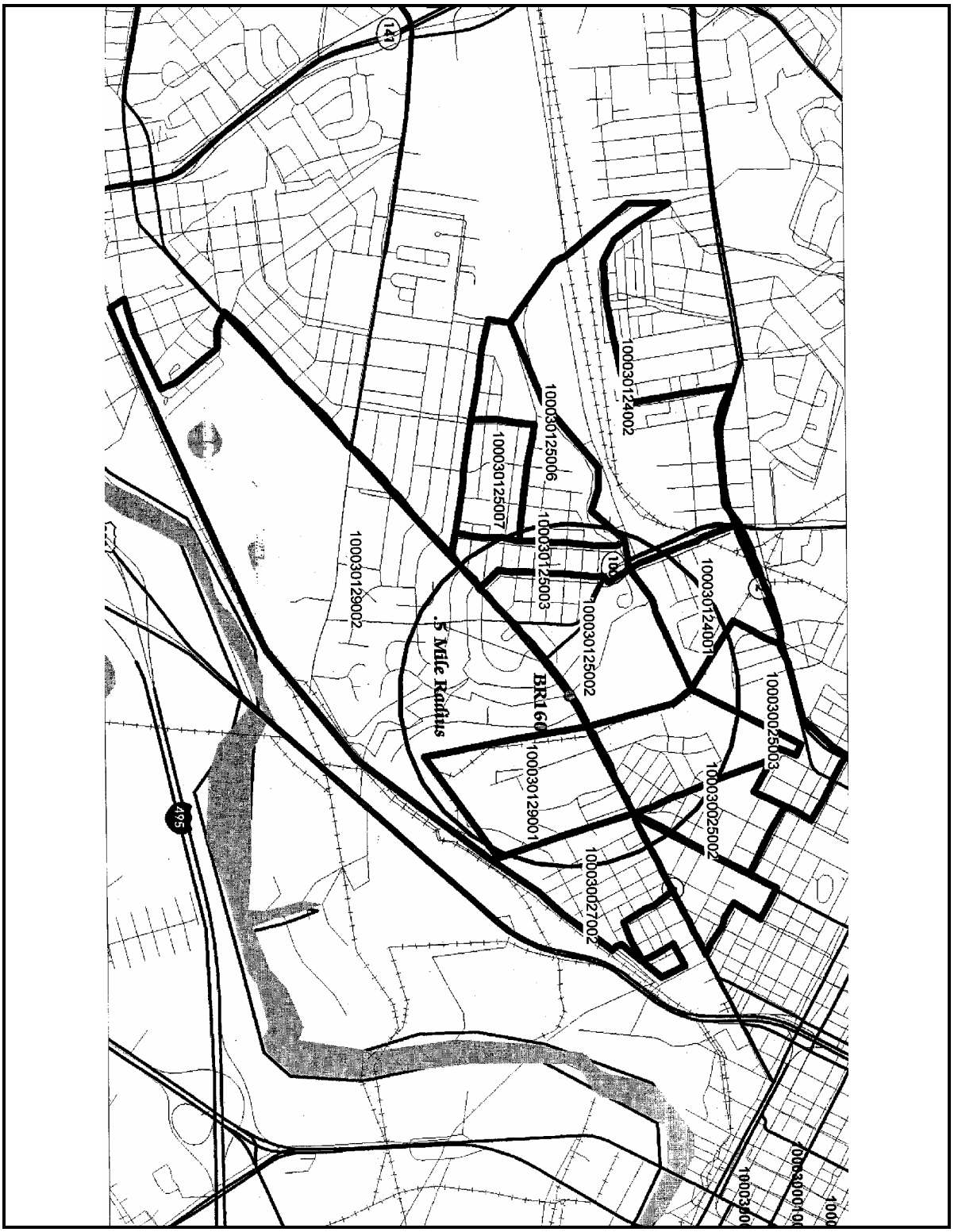

2.9.5 PRELIMINARY DESIGN

2.9.5.1 Drainage and Foundation Reports

Details for the hydraulic report, hydrology analysis, and scour evaluation report are presented in Chapter Three. Preparation of foundation reports is covered in Chapter Six.

2.9.5.1.1 Hydraulic Report

A hydraulic report is required for any bridge over a stream or tidal area. The report must provide a hydraulic analysis, flood profiles for the design year, 100-year and 500-year floods, and recommendations. Preparation of the Hydraulic Report, design-year criteria, and plan presentation are covered in Chapter Three.

The hydrologic analysis is used to determine the rate of flow, runoff, or discharge that the drainage facility will be required to accommodate and is included in the hydraulic report. A hydrologic analysis is required for any bridge over water.

2.9.5.1.2 Scour Evaluation Report

A scour analysis is required for any structure over a stream or tidal area. The report must include the scour calculations and recommended countermeasures, as well as other details of the evaluation. Refer to Section 3.4.1.4 for information to be included in the Project Notes of the plans.

2.9.5.1.3 Foundation Report

Foundation reports are required for all structures. Among other items, the foundation report includes the soil bearing capacity, the type of foundation, and, if piles are recommended, the type and size of piles.

2.9.5.2 Pre-TS&L and Conceptual Plans

Conceptual plans prior to the TS&L (type, size, and location) plans are required only on larger projects or those with unusual conditions. The need for conceptual or pre-TS&L plans will be determined on a case-by-case basis. When pre-TS&L submissions are required, the following items must be submitted:

- pre-TS&L plans;
- subsurface investigation requirements; and
- preliminary hydraulics (if applicable).

Pre-TS&L plans include:

- plan and profile;
- typical sections;
- structure type; and
- span lengths.

2.9.5.3 Aesthetic Considerations

While all bridges should be designed to be aesthetically pleasing insofar as that is practical, special designs that consider aesthetics are normally required only for bridges in historic areas of Delaware. The most common aesthetic treatment is stone facing. Where this treatment is required, the structure must be designed to accommodate it. The need for aesthetic treatment is determined on a case-by-case basis. Requests for aesthetic treatment may come from public involvement or through coordination with other agencies, such as SHPO. Any aesthetic treatment should be part of a complete context sensitive design. Refer to Section 2.5.6 for context sensitive design guidance.

2.9.5.4 Design Exceptions

Normally, designs will meet or exceed the minimum design standards. Occasionally, unusual conditions may warrant consideration of a lower standard. In such cases, the proposed design must be thoroughly documented for review and approval by the Department and, if required, by FHWA.

The need for exceptions to the standards must be identified early in the design phase so approvals or denials will not delay completion of the design or require extensive redesign. Thorough documentation is essential. The need for exceptions should be rare with the flexibility in the Road Design Manual. Excessive requests for and approval of exceptions will undermine the credibility of the standards.

Use the Design Exception Request Form (Figure 2-7) to document requests for exceptions. The designer must provide all the supporting rationale—including the necessary design criteria, figures, calculations, cost analyses, accident records, mitigation costs, photographs, plan sheets, etc.—for each request in sufficient detail to document the request. The Project Design Control Checklist form (Figure 2-8) and the Design Criteria form (Figure 2-9) should be included in the documentation, if applicable. The Design Criteria form applies to new construction or 4R projects. Refer to Section 2.9.1.3 for the definition of a bridge 4R project. A project note shall be included in the plans listing the items that have approved design exceptions.

FHWA will review design exceptions only for projects meeting the criteria listed in Section 2.9.1.3.

2.9.5.5 TS&L Plans

For submission to FHWA, type, size, and location (TS&L) plans are prepared only for large projects on the National Highway System (NHS) with an estimated cost of one million dollars or greater. To ensure that TS&L plans will be available when needed, TS&L plans will be prepared for all interstate and NHS projects with estimated costs greater than $800,000 to allow for unforeseen changes during design. TS&L plans may be required on other projects at the discretion of the Bridge Design Engineer. Design of State-funded projects and smaller federal-aid projects normally begins with preliminary plans.

The following information will be shown on TS&L plans:

- A plan view, including controlling clearances, span length, skew, existing contours, and end structure drainage, where required.
- An elevation view showing controlling clearances, span length, existing and finished ground line, continuity, fixed and expansion support conditions, type and movement classification of expansion dams, and type of bearings.
- Sections showing dimensions, traffic lanes, shoulder widths, beam type, depth, and spacing, overhangs, cross slope, superelevation, minimum slab thickness, type of traffic or pedestrian barrier, and thickness of wearing surface.
- Loading, design and analysis method, and any nonstandard details.
- Soil boring locations.
- Hydraulic information, including flood of record and date, slope protection where required, and preliminary scour information.

- Horizontal and vertical curve data.
- For retaining walls, the length and height of each segment. (Foundation recommendations must be provided in the TS&L plans for walls prior to approval.)

In addition to the TS&L plans, the submittal must include:

- TS&L calculations;
- a cost estimate for each alternate being considered;
- constructibility discussion for unusual structures;
- the Preliminary Foundation Report;
- preliminary foundation calculations; and
- if applicable:
  - the Preliminary Hydraulic Report;
  - preliminary hydraulic calculations; and
  - preliminary scour.

2.9.5.6 Preliminary Plans

The submissions required at the preliminary plan stage are as follows:

- preliminary plans;
- preliminary calculations;
- the preliminary cost estimate;
- the Final Foundation Report;
- preliminary special provisions for unique items;
- the Final Hydraulics Report (if applicable); and
- the final scour analysis (if applicable).

Preliminary plans include all TS&L drawings plus the following:

- roadway plans;
- roadway profiles;
- limits of project;
- approach roadway details;
- limits of guardrail;
- existing utilities;
- major drainage details;
- erosion and sediment control;
- proposed pavement sections;
- limits of construction (LOC);
- clear zones on title sheet, typical roadway section, and construction plan sheets;
- existing right-of-way; and
- proposed right-of-way.

When determining the limits of construction, the designer should consider the temporary and permanent impacts due to erosion and sediment control, utilities, and construction staging. The coordination required at the preliminary plans stage of design is specified in the Design Process Checklist.

DelDOT's distribution list should be consulted for submission requirements at each phase of design.

2.9.5.7 Preliminary Plans Review

Copies of the preliminary plans are sent to all sections listed in the distribution list for review and comment. The comments from each reviewer of the preliminary plans are reviewed and evaluated for consideration in preparing the semi-final plans. All questions raised by reviewers must be addressed by the designer, but not necessarily in writing. Face-to-face discussion of reviewers' comments is the preferred method. These discussions should be documented in the project file. If a face-to-face discussion is not possible, a written response should be made. If there are conflicting or numerous comments, a preliminary plan review meeting should be called.

Figure 2-7
Design Exception Request Form

State Project No._____Federal-Aid Project No._____

Date: _____**Oversight Project: Yes _____No____**

Design Exception Abstract: (Provide a short summary detailing the nature of the exception, reasons for the request, etc.)

Note:
For all NHS projects, the thirteen controlling criteria to be met are design speed; through lane and auxiliary lane width; shoulder width; bridge width, structural capacity, horizontal alignment; vertical alignment; grades; stopping sight distance, cross-slope; superelevation; horizontal clearance; and vertical clearance.

RECOMMENDATION:

The purpose of this project is to----------.

The most effective method of addressing this is----------.

Based upon the conditions presented, it is recommended that a design exception be approved for the controlling substandard design element as justified.

Recommended By: _____
Supervising Engineer, Bridge Design

Recommended By: _____
Bridge Design Engineer

Recommended By: _____
Assistant Director-Design

Approved By: _____ **Date**: _____
Chief Engineer

Approved By: _____ **Date**: _____
Federal Highway Administration (NHS oversight projects only)

Enclosures: (Include design criteria, figures, calculations, etc. to document request.)

Figure 2-8
Project Design Control Checklist Form

PROJECT DATA

Squad Leader/Project Manager: _____

Project Title: _____

Contract No.: _____

Federal Aid Project No: _____

Project Limits: _____

Type of Construction: _____

Project Scope and Initial Estimate: _____

_____

_____

_____

DESIGN DATA

Functional Classification: _____

Current AADT (Year) _____

Projected AADT (Year): _____

Projected DHV (Year): _____

% Trucks _____

Directional Distribution (%): _____

Design Speed _____

Design Vehicle _____

Design Level of Service _____

Clear Zone _____

Recommended By: _____

Squad Manager

Recommended By: _____

Group Engineer

Recommended By: _____

Assistant Director-Transportation Solutions

Approved By: _____

Director-Transportation Solutions

Figure 2-9
Design Criteria Form

Design Criteria		
Design Factor	**As per Road Design Manual**	**Provided**
Design Speed*		
Width of Through Lanes*		
Width of Auxiliary Lanes*		
Width of Outside Shoulder*		
Width of Inside Shoulder*		
Cross Slope*		
Width of Median		
Stopping Sight Distance*		
Minimum Horizontal Curve Radius*		
Minimum K (Crest)*		
Minimum K (Sag)*		
Maximum % Grade*		
Maximum front slope (Unprotected Section)		
Maximum back slope		
Barrier Offset		
Superelevation Rate (%)*		
Bridge Width*		
Vertical Clearance*		
Structural Capacity*		
Horizontal Clearance *		
Width of clear zone		

General Notes:
- Use this form primarily for new construction or reconstruction projects.
- The Chief Engineer must approve design criteria deviating from the requirements of the Road Design Manual through the use Figure 2-9 "Design Exception Request."

* FHWA controlling criteria

Recommended By: _____
Supervising Engineer, Bridge Design

Recommended By: _____
Bridge Design Engineer

Approved By: _____
Assistant Director - Design

2.9.5.7.1 Preliminary Utility Plans

The designer will provide the Utilities Section with two sets of preliminary plans for distribution to each utility involved in the project. Each utility is requested to show proposed utility relocations and any proposed attachments to the structure. A review will be made to identify potential conflicts with existing utilities, determine which conflicts cannot be avoided, and identify any additional right-of-way required to accommodate utility relocations. The Department is responsible for obtaining additional right-of-way needed for utility relocations.

The designer, in coordination with the Utility Coordinator and the utility company's representative, will review the preliminary plans to determine whether the exact locations of existing underground installations must be known. The Utility Coordinator and the utility representative will determine who will provide test holes for locating utilities and when. The results of the test holes will be forwarded to the designer for incorporation into the plans.

The designer may need to meet with utility companies to resolve conflicts.

2.9.5.7.2 Traffic Design Request

Design of detours, lighting, or traffic signals is a function of the Traffic Section. When any of these items is required on a project, the designer must submit a request to Traffic to initiate the designs. A copy of the preliminary plans should accompany the request. This step may be omitted if these services are not needed.

2.9.5.8 Public Information

The designer will schedule a public workshop, if required, through the Division of Public Relations after distribution of preliminary plans. Refer to Section 2.9.2.4 for requirements.

2.9.6 AGREEMENTS

2.9.6.1 Types and Purposes of Agreements

Five types of agreements are normally needed:

- town;
- railroad;
- utility;
- right-of-way; and
- noise ordinance waivers.

2.9.6.1.1 Town Agreements

A town agreement is needed for all projects located within an incorporated municipality's boundaries as a result of proposed construction. This would include any temporary or permanent changes or traffic maintenance changes within the project area. Team Support will review all plans for the need for a town agreement. Town agreements are signed by the Assistant Director for Design and are approved as to form by the Deputy Attorney General prior to requesting town approval. The agreement makes the municipality aware of DelDOT's intentions and can approve as well as coordinate any proposed work the municipality proposes with the Department's proposed work. Plans that are attached to an agreement are to be in a form that accurately depicts project impacts. Project plans are submitted to the town at approved semi-final construction plan status. Non-standard language in the town agreement is shown in bold typeface.

If any easements or rights-of-way are necessary, town agreements take longer to approve as it involves municipal approval of maintenance responsibilities within the additional rights-of-way or easement areas.

This action requires a more detailed agreement to be submitted along with the plans. Finalized right-of-way plans are also added as part of the agreement package.

A copy of the executed town agreement is required before the right-of-way certificate can be issued by Real Estate.

2.9.6.1.2 Railroads

An agreement approved by the railroad must be obtained for any work to be done on railroad right-of-way. The process for obtaining railroad agreements is time consuming. Designers should initiate the request in writing for an agreement as soon as it is determined that an agreement will be needed. The Railroad Coordinator initiates the process to obtain railroad agreements when the preliminary plans are received.

2.9.6.1.3 Utilities

Utilities along existing highways or on new alignments frequently must be relocated to allow for improvements. The requirements for utility adjustments are defined in the DelDOT *Utilities Design Manual*. Agreements with utility companies are needed to define the approved location of utilities, construction requirements, and financial responsibilities for the adjustment. These agreements will also include any agreements, and the conditions, for attaching utilities to bridges and other structures. The Utilities Section is responsible for obtaining utility agreements. Designers may, in some instances, be able to adjust designs to reduce the need for utility adjustments. Obtaining utility agreements should be started early in the design process.

2.9.6.1.4 Right-of-Way

Preliminary right-of-way plans show the conceptual right-of-way requirements. Care should be taken to minimize acquisition and impacts on adjacent properties.

When designers meet with landowners, any commitments made by design must be communicated to the Real Estate Section so they can be incorporated into the right-of-way agreements.

2.9.6.1.5 Noise Ordinance Waivers

If extended work hours are required in unincorporated areas, a waiver of the county noise ordinance may be required. The designer should coordinate with the appropriate county or municipality to obtain the waiver.

2.9.6.2 Designer Responsibility

The designer establishes the right-of-way requirements. The designer is also responsible for furnishing all project information necessary for preparation of the agreements and for ensuring that all agreement conditions are incorporated into the design plans and special provisions. The designer should review all agreements to ensure that all conditions are addressed. The designer cannot override any right-of-way agreement condition on an approved agreement without the approval of the Real Estate Section. Appeals of Real Estate Section decisions may be made through the Department chain of command.

2.9.6.3 Responsibility of Other Sections

The Real Estate Section is responsible for obtaining the necessary right-of-way and easements.

The Team Support Engineer is responsible for obtaining agreements with towns.

The Utilities Section is responsible for obtaining utility and railroad agreements,

coordinating utility relocation needs and requirements in cooperation with the designer.

2.9.7 SEMI-FINAL SUBMISSION

2.9.7.1 Semi-Final Right-of-Way Plan

As noted in Section 2.9.6.2, the designer determines the right-of-way needs. Semi-final right-of-way plans are prepared and submitted separately from other semi-final plan submissions. The designer should submit the semi-final right-of-way plans for review and approval before the semi-final construction plans to expedite right-of-way acquisition.

The designer recommends the right-of-way requirements. Team Support reviews and approves the designer's right-of-way recommendations. Team Support communicates any questions or comments to the designer. Final approval of right-of-way is the responsibility of the Chief Engineer.

2.9.7.2 Semi-Final Construction Plan Submittal Requirements

The submission for semi-final bridge construction plans includes everything required for a complete design except final quantities. See Section 2.8.2.

All bid items must be listed at this stage of design. Estimated quantities for the bid items may not be final for this submission.

Included with this submission should be special provisions which should be submitted as per DelDOT's distribution list.

A cost estimate based on the semi-final design quantities is prepared as a check on the initial cost estimate. The designer should advise the Bridge Design Engineer of any significant changes in the estimated cost of the project. The Bridge Design Engineer then notifies Finance of the change.

2.9.7.3 Utilities Submission

The designer must provide the Utilities Section with two sets of the semi-final plans to distribute to each utility involved in the project. The final proposed relocation plan will be shown on the plans, and the Utility Statement will be prepared from these plans.

Requests for attachments of utilities to structures will be included in the Utility Statement and the plans marked up by the utility. Such requests are subject to approval by the Assistant Director or Chief Engineer. Refer to the *Utilities Design Manual*.

The designer must review the utility information returned so it can be incorporated into the plans. A meeting with the utility may be necessary to resolve conflicts. Questions about utility adjustments should be directed to the Utilities Section.

2.9.7.4 Semi-Final Construction Plan Review

Copies of the semi-final plans are sent to all sections listed in the distribution list for review and comment. The comments from each reviewer of the semi-final plans are reviewed and evaluated for consideration in preparing the final plans. All questions raised by reviewers must be addressed by the designer but not necessarily in writing. Face-to-face discussions of reviewers' comments is the preferred method. These discussions should be documented in the project file. If a face-to-face discussion is not possible, a written response should be made. If there are conflicting or numerous comments, a semi-final plan review meeting

should be called. The purpose of the review is to gain consensus on the proposed work among the participants of the review—Bridge Design, reviewing sections, and design consultant representatives.

The semi-final plan review for rehabilitation projects must include an on-site inspection to evaluate the proposed work and actual bridge conditions.

2.9.8 SPECIAL PROVISIONS AND CONTRACT DOCUMENTS

The Specifications Engineer is responsible for standard or modified specifications. Any special provisions needed for bid items not covered by standard or current special provisions are prepared by the designer. The Specifications Engineer sends copies of draft special provisions to Design and Construction for review with the semi-final plan distribution. Comments are considered in preparing the final special provisions. The special provisions are considered final after this review.

2.9.9 FINAL PLANS AND ESTIMATES

2.9.9.1 Final Plans

Final plan preparations are an update of semi-final plans, which includes:

- final plans;
- final quantities, including calculations;
- design calculations;
- special provisions;
- a cost estimate; and
- the bridge ratings, calculated in accordance with Chapter 4 and listed in the project notes of the plans.

The designer must incorporate into the plans all requirements specified in statements, agreements and permits: towns, utilities, railroads, right-of-way, and environmental. The terms of the permits and acquisitions are defined in the agreements. Some conditions in the agreements may affect the project design and the requirements placed on the contractor. Designers need to review all agreements to ensure that all requirements are included in the plans.

The Department maintains a unit cost history for all bid items. Unit costs from this history are used as a starting point for project cost estimates. These unit costs should be adjusted for project characteristics such as quantities, location, and site conditions. For example, unit costs tend to be lower when there are large quantities of an item.

One copy of the final plans, quantity calculations, and time estimate should be sent to Construction and Quality for review at the final plan stage.

2.9.9.2 Final Plans Review Meeting

A final plans and specifications review is conducted for all major or complex projects.

The review is coordinated by the designer and is attended by the designer and representatives from Bridge Management, the Utilities Section, Traffic, Materials and Research, Construction, Quality, Team Support, and FHWA.

Contract time is determined by Constructibility and Timing personnel. A review of contract time is a part of this separate meeting. Contract time, the anticipated letting date and the anticipated start of construction directly affect some contract quantities, particularly traffic control items such as flagging hours and arrow panel use. These quantities may require adjustment if contract time is

significantly different from that assumed by the designer.

2.9.9.3 Title Sheet Signatures

The plan title sheet is signed and sealed by the design project engineer and submitted for signatures and seals of the following as applicable:

- the Stormwater Engineer;
- the Squad Manager;
- the Bridge Design Engineer;
- the Area Engineer/Manager, Group Engineer and Assistant Director, Construction;
- the Group Engineer for Project Development (if applicable);
- the Assistant Director, Transportation Solutions; and
- the Chief Engineer.

An extra signature and seal block is required for projects designed by consultants.

The Chief Engineer's signature indicates approval of the plans. All others recommend the plans for approval.

2.9.10 PS&E SUBMISSION

The PS&E (Plans, Specifications, and Estimates) submission is the final step before advertising the project for bids. The PS&E submission must be made at least one week before the scheduled advertisement date for State-funded projects and two weeks for federally funded projects. All submissions are directed to the PS&E Coordinator.

- The designer submits the final plans and estimates. Cost estimates must be submitted electronically using the Department's engineering estimate software.
- The Specifications Engineer submits the Special Provisions.
- All other sections (Traffic, Environmental Studies, Utility, and Real Estate) submit their statements for advertisement.

When Design Services receives all of the necessary submittals, they are sent to Contract Administration for advertising.

2.9.11 PS&E APPROVAL AND FUNDING

Contract Administration provides a contract package to Finance. Finance prepares the official PS&E submission to FHWA for approval. Finance issues Form FS-1, Project Authorization & Funding, to Contract Administration for all projects—both federal-aid and State projects.

2.9.12 ADVERTISING

Following the issuance of Form FS-1, Contract Administration advertises the project for bids. The normal advertising period is four weeks, but it may be abbreviated to three weeks under special circumstances or extended to as many as six weeks if a pre-bid meeting is needed.

2.9.13 PRE-BID MEETINGS

The need for pre-bid meetings is determined on a case-by-case basis. They are held on unusual, complex, or very large projects where contractors may need extra information to develop their bids. The pre-bid meeting must be stipulated in the contract documents by Contract Administration.

2.9.14 ADDENDUMS

Addendums are design changes that are made between the time a project is advertised for bids and the opening of bids.

Because contractors must have time to prepare their bids, addendums cannot be accepted later than five calendar days before the bid opening date. Addendum changes of major significance after that date may require that the project bid opening be postponed or canceled and readvertised.

A new right-of-way statement is required for any addendums that require additional right-of-way.

2.9.15 BID OPENING AND BID REVIEW

The designer is encouraged to attend the bid opening. Contract Administration reviews the bids to identify any irregularities. The bid tabulations are normally forwarded to the designer within one day of the bid opening. The designer must receive a copy of the bid tabulations for review. The designer reviews the bid prices and total cost against the engineer's estimate and determines whether there are any unbalanced bids. (Refer to DelDOT's Design Guidance Memorandum on reviewing bids.) Refer to Section 102 in the *Standard Specifications* for criteria for unbalanced bids. Bid prices that are significantly higher or lower than the estimated costs require analysis and possible discussion with the low bidder in the form of a pre-award meeting.

Unless problems are found in the review, the Bridge Design Engineer writes a letter (approved by the Assistant Director or the Chief Engineer if the bid is greater than 10% over the engineer's estimate) recommending award of the contract to the low bidder to the Director of Finance. The award letter must be sent within two weeks after the bid opening to allow for the contract award in the allotted time. If problems are found, it may be necessary to reject the low bid. The rejection of any bid must be documented, reviewed by the Deputy Attorney General assigned to the Department, and approved by the Chief Engineer.

2.9.16 REVISIONS

Revisions are design changes that are made during construction. These changes may require change orders approved by the contractor and the Department.

A new right-of-way statement is required for any revisions that require additional right-of-way. Where additional right-of-way is required because of a revision, construction work cannot proceed until the necessary right-of-way is obtained or right of entry is approved by the landowner.

2.9.17 AS-BUILT PLANS

Frequently, changes are made in some aspects of the design during construction. Field personnel mark up a set of plans showing the significant changes in red. Bridge Design Section personnel then transfer this information to the original tracings by crossing out the original data and recording the revised data to produce the "as-built" plans.

The procedure for tracings prepared by CADD is similar. A reproducible drawing prepared on a CADD workstation is retained as the "record" drawing. As-built changes are marked in red on the record drawing. The record drawing is then scanned into digital format. A copy of the revised "As-Built" plans is sent to the district involved, with the marked-up copy provided by field personnel.

Chapter Three

Hydrology and Hydraulics

3.1 INTRODUCTION

The objectives of a hydraulic design are to identify the stream forces that may cause harm to the bridge or roadway system and to provide a safe level of service acceptable to the needs of the traveling public without unreasonable effect on adjacent property.

3.1.1 POLICY AND COORDINATION

Consideration of the effects of constructing a bridge across a waterway is key to assuring the long-term stability of the structure. Confining the floodwater may cause excessive backwater or overtopping of the roadway, or it may induce excessive scour. These effects may result in damage to upstream land and improvements or endanger the bridge. Conversely, an excessively long bridge may cause flooding downstream or cost far more than can be justified by the benefits obtained. Somewhere between these extremes is the design that will be the most economical to the public over a long period of time.

The designer must evaluate existing upstream conditions as well as future upstream development—25 years, if possible—in sizing a structure. The amount of information available to assist the designer in predicting future development is limited. Available information includes the following:

- DelDOT's Division of Planning projects land use data for 20 years. The projections include population, dwelling units, number of vehicles, and employment for each traffic zone in the counties' system zones as well as the area type—city, urban, inner suburban, outer suburban, or rural.
- Each county maintains zoning maps, which show the current zoning status of land within the county.
- The Department of Planning in each county prepares a comprehensive development plan which presents their concept of the optimum use of the land within the county. The plans include detailed maps that show the current and proposed use of all lands in the county. These plans must be used with judgment since they do not necessarily conform with current zoning and the land may not be developed within the projected time frame.

Article 10 of the *New Castle County Unified Development Code* establishes criteria for structures in or near floodplains and floodways. All projects in New Castle County are subject to this ordinance. Any structure to be located, relocated, constructed, reconstructed, extended, enlarged, or structurally altered within a

designated floodplain is subject to the County Code. The major items that must be included in the application procedures that affect structure designers are as follows:

- the site location and tax parcel number;
- a brief description of the proposed work;
- a plan of the site showing the exact size and location of the proposed construction as well as any existing structures;
- an engineering analysis of the impact on the floodplain utilizing HEC-RAS, WSPRO or other acceptable backwater analysis model;
- an accurate delineation of the floodplain area, including the location of any adjacent floodplain development or structures and the location of any existing or proposed subdivision and land development;
- delineation of existing and proposed contours;
- information concerning the 100-year flood elevations and other applicable information such as the size of structures, location and elevation of streets, water supply and sanitary sewer facilities, soil types, and flood-proofing measures; and
- a document, certified by a registered professional engineer, which states that any proposed construction has been adequately designed to withstand the 100-year flood pressures, velocities, impact and uplift forces, and other hydrostatic, hydrodynamic and buoyancy factors associated with the 100-year flood.

Refer to Appendix 1 of the *New Castle County Unified Development Code* for the specific requirements.

Projects in New Castle, Kent, and Sussex Counties are subject to the regulations administered by the Federal Emergency Management Agency (FEMA). However, New Castle County's Unified Development Code contains more stringent requirements concerning increases in water surface profiles. When water surface profiles are increased greater than permitted by the FEMA regulations, a Conditional Letter of Map Revision (CLOMR) is required. Refer to FEMA publication *Procedures for Coordinating Highway Encroachments on Floodplains with Federal Emergency Management Agency*.

3.1.2 DESIGN RESPONSIBILITIES

Responsibilities for drainage design are divided between the Bridge Design Section and the Project Development sections based primarily on the size of the drainage area. Bridge Design is responsible for all watersheds over 300 acres [120 hectares] and locations where the existing structure opening exceeds 20 ft^2 [1.86 m^2]. Project Development is responsible for watersheds smaller than 300 acres [120 hectares].

The Bridge Design Section is responsible for design of all locations requiring structures exceeding 20 ft^2 [1.86 m^2] of waterway opening for a single location. Bridge Design will also be responsible for design of pipe culverts, closed drainage systems, roadside ditches, and stormwater management on "bridge only" projects.

The guidelines noted in this chapter are applicable to all structures and culverts.

Refer to Chapter Six of the *Road Design Manual* for the design and construction of adjacent drainage ditches, pipe culverts, closed drainage systems, and erosion control near stream crossings.

If the designer is using a design flood frequency less than that shown in Figure 3-2, a risk analysis must be performed. This needs approval by the Bridge Design Engineer. Where a risk analysis is needed, a complete hydraulic report should be prepared giving consideration to each alternative under study. The lower level of study, risk assessment, should always be considered as the first course of action. Only if a detailed economic accounting of the risks and potential harm is needed should an extensive risk analysis be performed. A detailed analysis must be performed in situations involving substantial losses resulting in high encroachment costs. It will always be necessary to apply good engineering judgment in determining the level of evaluation to be performed. Information found in *HEC-17, Design of Encroachments of Flood Plains Using Risk Analysis*, may provide the needed guidance.

3.1.3 HYDRAULIC ASSESSMENT CHECKLIST

Completion of the Hydraulic Assessment Checklist (Figure 3-1) documents the design of the structure as well as providing guidance to the designer to ensure that all items are completed. The designer is responsible for completing the checklist. It is completed in three phases:

- Part I, General Site Data, and Part II, Existing Structure, are to be completed in the office in preparation for the field inspection;
- Part III, Field Inspection, provides guidelines to ensure that all items are completed during the field inspection; and
- Part IV, Proposed Structure, documents the design of the proposed structure and the level of evaluation.

3.1.4 TOPOGRAPHIC SURVEY

The designer must request a survey. Any specific information needed for the Hydraulic Checklist or information in addition to that normally required must be included in the designer's request. See Chapter Two for a sample survey request form.

Figure 3-1a
Hydraulic Assessment Checklist for Drainage Design

Part I. General Site Data
Bridge No. _____ Project No. _____
County: New Castle __ Kent __ Sussex __ Region: North __ South __
Road Number _____ Road Name: _____
Project Location: _____
Site Name: _____ Station: _____ M.P. _____
Site Description: Cross Road Drain __, Tax Ditch __, Storm Drain __,
Channel Change __, Tidal __, Long. Encroach. __, Other _____
Project Type: Repair ___, Replacement ___, Relocation ___
Stream Name: _____
Functional Class: __ Interstate __ Collector
__ Major Arterial __ Local
__ Minor Arterial __ Entrance/Side Road
Traffic Data: Current ADT _____ Year_____ % Trucks_____
Design ADT _____ Year _____ % Trucks _____
Design Speed _____ Design H. Vol. (DHV) _____
Route Importance: Defense route _____
Emergency, School _____
Can route be closed? Yes __ No __
Adequate detour? Yes __ Length _____
No __Restrictions _____
Temporary pedestrian crossing required? Yes __ No __

Part II. Existing Structure (From existing plans and/or survey)
Survey source: Field __ Aerial __ Other _____
Survey datum: _____
Date survey received: _____ From: _____
Description: _____
Existing Plans Available: Yes __ No __
Roadway Approach Width: _____ Bridge Width: ___ (Curb to Curb) ____ (Out to Out)
Streambed Elevation: ____ Avg. Low Steel Elevation or Top of Opening Elevation ____
Underclearance: _____ Overtopping Elevation _____
(Bottom of beam to normal water surface elevation)
Clearance from Flood of Record _____ Existing waterway opening _____
Drainage area (Total) _____ Acres
Drainage area controlled by upstream storage _____ Acres
Navigable waterway? Yes __ No __

Figure 3-1b
Hydraulic Assessment Checklist for Drainage Design

Part III. Field Inspection

1. Site inspected by: _____ Date: _____
2. Survey appears correct? Yes __ No __ Apparent errors: _____
_____
3. Flooding apparent? No __ Yes __; HW marks obtained Yes __ No __ because _____
_____
4. Damage from previous floods: Yes __ (If yes, attach report) No __
Road closings for floods (Dates/hours): _____
_____
H. W. of record: Elevation _____
Circumstances: _____
_____
5. Channel cross sections obtained? Yes __ No __, Because _____
_____
6. Channel unstable? No __ Yes __ Because of __ headcutting observed and __ amount and location obtained, __ bank caving, __ braiding, __ increased meander activity, __ degrading, __ aggrading, __ other _____
On meander ____, bend ____, or straightaway ____
Channel alignment: _____
Slope _____
Ordinary high water (Active channel) elevation _____
100-yr. Floodplain elevation (FEMA) _____
Floodway elevation (FEMA) _____
Regulated floodway _____
Permits required: COE ___ Coast Guard ___ Subaqueous ___ NCC ___
Evidence of drift _____
Evidence of scour _____
Evidence of ice damage _____
Evidence of overtopping damage to road _____
Bank protection needed _____
Energy dissipater needed _____
Channel change needed _____
Raise/lower profile grade _____
Upstream erosion control needed _____
Downstream apron needed _____
7. Structure scour in evidence No __ Minor __ Yes __ and __ obtained bed/bank samples and __ noted any flow alignment problems, Yes _ and bed/bank samples not obtained and __ flow alignment not noted because _____
8. Manning's "n" obtained? Yes __ No __ Because _____
Description of banks and channels: _____
_____

Figure 3-1c
Hydraulic Assessment Checklist for Drainage Design

9. Property damage due to flooding? No __ Yes __
Elevation/property type checked, Yes __, No __ because: _____
_____

Controls affecting water surface elevation:

Structures:

RR bridge ___ Location ___ feet (upstream/downstream)
Highway bridge ___ Location ___ feet (upstream/downstream)
Rock outcrop ___ Location ___ feet (upstream/downstream)
Other_____

10. Environmental hazards present? No __ Yes __ and details obtained, Yes __, No __ because _____ Not sure ____

11. Ground photos taken? __ Upstream floodplain and all property, __ Downstream floodplain and all property, __ Site looking downstream, __ Site looking upstream, __ Channel material w/scale, __ Evidence of channel instability, __ Evidence of scour, __ Existing structure inlet/outlet, __ Other _____

12. Land use:

Rural
Pasture ____%
Cultivated ____%
Forest Cover ____ Hectares

Suburban ____%
Density ____Houses/hectare

Urban
Residential____ %
Industrial/commercial____ %

High runoff area (Type D Soils) _____ Acres
Low runoff area (Type A Soils) _____ Acres
Potential for future development: _____
Upstream development:

Residence ____ Story
Basement? ____
Occupied ____
Condition ____
Location ____
1st fl. elevation ____

Industry type _____
Locations _____
Condition _____

13. Should new structure be considered? Yes __ No __

If yes, reasons:

Inadequate roadway: ____
Inadequate clearance: ____
Inadequate loading: ____
Inadequate waterway: ____
Structural deterioration: ____
Route relocation: ____

Sufficiency rating: _____
Date of suff. rating: _____ Year
Posted: _____

Year built: _____
Year modified: _____

Figure 3-1d
Hydraulic Assessment Checklist for Drainage Design

Part IV. Proposed Structure

Bridge description: _____

Approach roadway width: _____ Bridge roadway width: _____

Horizontal alignment: Tangent _____ Curve _____ Skew _____ °

Superelevation: _____

Vertical alignment: Tangent grade: _____ %

Vertical curve: G1 _____ % G2 _____ % L _____

PI Station: _____ PI Elevation: _____

Underclearance: _____ feet

Low superstructure element elev. _____ at _____ year design flood

Overtopping elevation: _____ Freeboard: _____

Storm	Discharge	Existing HW Elevation	Existing Backwater Elevation	Proposed HW Elevation	Proposed Backwater Elevation
Q_{25}	_____	_____	_____	_____	_____
Q_{50}	_____	_____	_____	_____	_____
Q_{100}	_____	_____	_____	_____	_____
Q_{500}	_____	_____	_____	_____	_____
Overtopping Q	_____	_____	_____	_____	_____

Location of overtopping: Bridge __ Roadway __ (Station)

Design frequency: _____

Total waterway provided: _____ Design waterway provided: _____

Average velocity @ Q_{des} _____

Reference and Special Reports Available:

_____ Field Check Report
_____ Designer's Hydraulic Report
_____ Risk Assessment Report
_____ Risk Analyses Report
_____ Corps of Engineers Flood Plain Information Report
_____ Corps of Engineers Study
_____ USGS Study
_____ SCS Watershed Report
_____ FEMA—FIA Flood Insurance/Zoning Report
_____ Other

List Attachments

1. _____
2. _____
3. _____
4. _____

3.1.5 HYDRAULIC REPORT

The minimum items required in a hydraulic report include:

- a location map;
- a hydrologic and hydraulic narrative that provides site data, a hydraulic analysis, and flood profiles for the design year, the 100-year and 500-year floods; and
- recommendations.

The report should be supplemented, as needed, with:

- photographs as applicable;
- USGS topographic maps;
- flood frequency curves;
- stage discharge curves for existing and proposed conditions;
- a scour analysis;
- water surface profiles for existing and proposed conditions based on HEC-RAS, WSPRO or other approved method;
- a 100-year flood boundary plan;
- stream cross sections;
- stream and flood surface profiles; and
- hydraulic assessment list.

3.2 HYDROLOGY

3.2.1 INTRODUCTION

Hydrologic analysis is used to determine the rate of flow, runoff, or discharge that the drainage facility will be required to accommodate.

3.2.2 DOCUMENTATION

The design of highway facilities should be adequately documented. Frequently, it is necessary to refer to plans, specifications, and hydrologic analyses long after the actual construction has been completed. One of the primary reasons for documentation is to evaluate the hydraulic performance of structures after large floods to determine whether the structures performed as anticipated or to establish the cause of unexpected behavior. In the event of failure, it is essential that contributing factors be identified to avoid recurring damage.

The documentation of a hydrologic analysis is the compilation and preservation of all pertinent information on which the hydrologic decision was based. This might include drainage areas and other maps, field-survey information, source references, photographs, hydrologic calculations, flood-frequency analyses, stage-discharge data and flood history, including narratives from highway maintenance personnel and local residents who witnessed or had knowledge of an unusual event.

Hydrologic data shown on project plans ensures a permanency of record, serves as a reference in making plan reviews, and aids field engineers during construction. Sample plan presentation data are provided in Section 3.6.

3.2.3 ESTIMATING FLOOD RUNOFF AND MAGNITUDES

In Delaware, there are six methods of estimating flood magnitudes in sizing a waterway opening for a given structure:

1. USGS Method,
2. TR-55,
3. Recorded Data,
4. Published Reports,
5. Rational Method, and
6. TR-20.

3.2.3.1 USGS Method

DelDOT uses the equations in the current version of the US Geological Survey (USGS) publication *Technique for Estimating Magnitude and Frequency of Floods in Delaware* to estimate flood runoff for drainage areas of 300 acres [120 hectares] or greater. This is the method typically used by DelDOT. These equations are based on specific studies of the watersheds in Delaware and adjacent states. This method relies on data from streamflow gaging station records combined statistically within a hydrologically homogenous region to produce flood-frequency relationships applicable throughout the region. If the designer is using gaging station records and wishes to evaluate these values for upstream or downstream sites, the procedures in the USGS publication should be followed.

From the study, it was concluded that reasonable estimates of flood runoff can be made by dividing the State into two regions. In the northern region, only the size of the drainage area, basin development factor, and storage are considered in the equations; the other factors that affect runoff are considered in the constants and exponents. In the southern region, basin relief, forest cover, and two soil categories must be considered in addition to the drainage area and storage. Each of these is discussed in the following sections.

Land use is not considered in the runoff equations for the Northern Region. Forest cover is a factor in the equations for the Southern Region.

In areas where land use may change, the TR-55 method should be used. If USGS is used, the designer is cautioned to consider the effects of possible changes in land use.

3.2.3.2 TR-55

The TR-55 program can generate and plot hydrographs, compute peak discharges, and perform detention pond storage estimates. It can account for hydrograph shift and attenuation due to reach routing. The program uses the Graphical Peak Discharge Method to compute peak flows for different return events in a watershed. TR-55 is a Soil Conservation Service (SCS) program which is applicable to small urban watersheds. Refer to the TR-55 manual for additional limitations to ensure that the degree of error is tolerable.

3.2.3.3 Recorded Data

The method of analyzing flood-frequency relationships from actual streamflow data for a single gaging station enables the use of records of past events to predict future occurrences. Consideration of future development must be included in these predictions. This method assumes that there are no changes in the nature of the factors causing the peak magnitudes. The ramifications of this assumption can be minimized by making every effort to determine the past conditions of the drainage area and, if possible, making allowances for changes. The most common changes are man-made and consist of such modifications as storage and land development. The user of hydrologic data must be acquainted with the procedures for evaluating streamflow data, the techniques for preparing a flood-frequency curve, and the proper interpretation of the curve.

There will be times when estimates made from a regional analysis will not agree with a flood-frequency analysis of a gaging station on the stream being studied. Various factors such as length of runoff records, storm distribution and parameters used in the regional analysis could account for some

of the discrepancies. Since all the stream records in Delaware are sufficiently long to give good flood-frequency relationships, considerable weight should be given to the stream record in estimating design floods. When gaging station records are used, the designer should consult the USGS (**http://www.usgs.gov/**) publication *Techniques for Estimating Magnitude and Frequency of Floods in Delaware* and current USGS data.

3.2.3.4 Published Reports

Published reports may be used for comparison with the calculated runoff. The FEMA Flood Insurance Study contains runoff information for many streams in Delaware. The report documents the methods used to determine runoff for each stream. Several reports were prepared by the U.S. Army Corps of Engineers for New Castle County. These reports contain floodplain information for many streams in New Castle County. The reports include historical runoff data as well as calculated runoff.

3.2.3.5 The Rational Method

The rational method is an empirical formula relating rainfall to runoff. It is the method used almost universally for computing urban runoff. It is also used to estimate bridge deck drainage for the design of scuppers.

Discharge, as computed by this method, is related to frequency by assuming the discharge has the same frequency as the rainfall used. Because of the assumption that the rainfall is of equal intensity over the entire watershed, it is recommended that this formula be used only for estimating runoff from small areas, up to 300 acres [120 hectares].

3.2.3.6 TR-20

The TR-20 computer program, developed by the SCS, develops flood hydrographs from runoff and routes the flow through stream channels and reservoirs. Routed hydrographs are combined with those of tributaries. The program provides procedures for hydrograph separation by branching or diversion of flow, and for adding baseflow. Peak discharges, their times of occurrence, water surface elevations and duration of flows can be computed at any desired cross section or structure. Complete discharge hydrographs, as well as discharge hydrograph elevations, can be obtained if requested. The program provides for the analysis of up to nine different rainstorm distributions over a watershed under various combinations of land treatment, floodwater retarding structures, diversions, and channel modifications. Such analyses can be performed on as many as 200 subwatersheds or reaches and 99 structures in any one continuous run.

3.2.4 DESIGN FLOOD FREQUENCY

The design frequencies for bridges and pipe culverts for each highway functional classification are shown in Figure 3-2. If a design frequency less than that shown in Figure 3-2 is used, the design must be based on a risk analysis and must be approved by the Bridge Design Engineer.

3.2.5 FREQUENCY MIXING

Often, the designer is faced with the situation wherein the hydraulic characteristics of the subject facility are influenced by a flood condition of a separate and independent drainage course. For example, a small stream may outfall

into a major river that itself is an outfall for a large and independently active watershed. It can reasonably be expected that these two waterways would seldom peak at the same time. Consequently, there are two independent events: one, a storm event occurring on the small stream; the other, a storm event applicable to the larger watershed.

Figure 3-2
Design Frequency Criteria

Functional Classification	Design Frequency (Years)	
	Bridges (Over 20 feet [6.1 m]) [2]	Pipes and Culverts[1]
Interstates, Freeways and Expressways	50	50
Principal Arterials and Minor Arterials	50	50
Major Collectors and Minor Collectors	50	50
Local Roads and Streets and Subdivision Streets	25	25

[1]Greater than 20 s.f. [1.8 m^2].
[2]Includes total out-to-out length of multiple pipe installations.
Note: Use a 25-year frequency for rural collectors.

Figure 3-3
Frequencies for Coincidental Occurrence

Area Ratio	25 Year Design		50 Year Design	
	Main Stream	Tributary	Main Stream	Tributary
10,000 to 1	2	25	2	50
	25	2	50	2
1,000 to 1	5	25	5	50
	25	5	50	5
100 to 1	10	25	10	50
	25	10	50	10
10 to1	10	25	25	50
	25	10	50	25
1 to 1	25	25	50	50
	25	25	50	50

Reference: Hydraulic Manual, Texas Department of Transportation.

In ordinary hydrologic circumstances, flood events on different watersheds are not usually entirely independent. Therefore, guidelines are needed to provide acceptable mixing criteria for independent waterways affected by separate storm events. To address this gray area, the table in Figure 3-3, based upon relative watershed sizes, is suggested as a guide to an appropriate assignment of event frequencies. The table, which is empirical and somewhat arbitrary, was devised by the Corps of Engineers, and is limited in scope. However, it does illustrate the concept described above. Note that, as the watershed sizes are more similar, the variance in the two frequency probability percentages diminishes.

For a given area ratio and design year, the designer should estimate the total flood discharge by adding the estimated discharges from the main stream and tributary based on the design year frequency. Two estimates must be made: one with the design storm applied to the main stream watershed and one with the tributary drainage area experiencing the design storm. The design should be based on the highest discharge.

The effects of tidal flows must be considered when the designer is evaluating the frequency mixing relationships. Refer to Section 3.3.5.

3.2.6 SPILLWAY DESIGN

Spillway design must take into consideration field survey data, drainage areas, reservoir capacity (from elevation and storage data), tidal influences, magnitude of peak in-flows for the design storm (considering frequency mixing), the Probable Maximum Flood, required freeboard below the top of the retention structure, water surface profiles, anticipated future development, and breach damage potentials. The significant range and nature of the influences that apply to normal hydrologic and hydraulic analyses also apply to spillway design. The designer is referred to various publications of the Army Corps of Engineers concerning spillway design requirements. See Section 3.7.

The design storm for spillway design shall be based on risk evaluation as described in Section 3.1.4. The design storm shall be approved by the Bridge Design Engineer. The minimum design storm for spillway design is the 100-year storm. Provisions should be made for drainage of the pond.

Normally, HEC-RAS (River Analysis System), HEC-1 (Flood Hydrograph Package) and HEC-HMS (Dam Breach Routine) are used by the designer. Critical to any spillway design are the breach analysis and Flood Damage estimates including economic losses and loss of life. Care must be taken not to affect existing pond water levels in the new design. Changes could have detrimental effects on adjacent properties.

3.3 HYDRAULICS

3.3.1 CULVERT HYDRAULICS

Culverts exhibit a wide range of flow patterns under varying discharges and tailwater elevations. To simplify the design process, two broad flow types are defined—inlet control and outlet control. A culvert operates with inlet control when the flow capacity is controlled at the entrance by the depth of headwater and the entrance geometry, including the barrel shape, the cross-sectional area, and the inlet edge. With inlet control, the roughness and length

of the culvert barrel and outlet conditions are not factors in determining culvert hydraulic performance. Special entrance designs can improve hydraulic performance and result in a more efficient and economical structure. In outlet control, the culvert hydraulic performance is determined by the factors governing inlet control plus the controlling water surface elevation at the outlet and the slope, length and roughness of the culvert barrel. With outlet control, factors that may appreciably affect performance for a given culvert size and headwater are barrel length and roughness, and tailwater depth. Although entrance geometry is a factor, only minor improvement in performance can be achieved by modifications to the culvert inlet. For each type of control, the headwater elevation is computed using applicable hydraulic principles and coefficients, and the greater headwater elevation is adopted for the design.

The minimum freeboard for culverts is 1 foot [0.3 m] below the top of the roadway slope. Consideration should be given to the impact on the upstream properties.

Sometimes a natural bottom in culverts is required to facilitate the passage of fish. The designer should evaluate this need. The culvert may be lowered to allow siltation to provide a natural bottom. Only one barrel of a multi-barrel installation needs to be lowered. A three-sided rigid frame provides a natural bottom without the necessity of lowering the invert.

Single-barrel culvert designs are preferred. No more than three barrels should be constructed at a single location. Allow at least 3 feet [0.9 m] between pipe culverts on multi-pipe installations to allow room for compaction equipment.

Culvert hydraulic computations should follow the standard FHWA procedures for conventional culverts described in *HDS-5, Hydraulic Design of Highway Culverts*. A complete computer software program entitled HY-8, Culvert Analysis, is available, which applies the theories and principles of HDS-5. Refer to Section 3.3.2 for the use of HEC-RAS or WSPRO to establish water surface profiles. Information from this program is used to make freeboard calculations.

3.3.2 BRIDGE HYDRAULICS

Freeboard for a bridge is defined as the clear vertical distance between the water surface and the low point of the superstructure. The minimum freeboard is 1 foot [0.3 m]. In no case will the bearings be submerged during the design storm.

Two commonly used computer programs are generally accepted and used by DelDOT. These programs are used for modeling water surface profiles and for sizing the waterway opening of a bridge. Generally, DelDOT prefers the use of HEC-RAS over WSPRO because HEC-RAS is a more user-friendly program and provides graphical output. WSPRO is more exact for scour analysis; see Section 3.4.

3.3.2.1 HEC-RAS

HEC-RAS, River Analysis System, performs open channel analysis for steady or unsteady, one-dimensional, gradually varied flow in both natural and manmade river channels. Some HEC-RAS capabilities include the following:

- Simulates surface runoff into a river basin and the interconnected basins of hydrologic and hydraulic components.
- Model water surface profiles in both subcritical and supercritical flows around

various obstructions such as bridges, culverts, weirs, and structures in the floodplain.

- Incorporates rainfall-runoff analysis, river hydraulics, reservoir system simulation, and sedimentation analysis with a graphic user interface.

The designer should request that the appropriate cross sections be taken in the survey. Refer to Section 2.9.3.1.

3.3.2.2 WSPRO

WSPRO (for Water Surface Profile Computational Model HY-7) is a computer model capable of determining water-surface profiles through unconstricted stream reaches and through bridges. The program uses a standard step method to compute backwater and requires the description of a series of cross sections that divide the stream into short lengths allowing the assumption of gradually varying, steady flow within the section. Definition of the geometry and roughness of each section is needed. Roughness is defined by Manning's n-values. Expansion and contraction coefficients, friction loss, equations, and variable flow lengths for over bank and main channel areas for each section can be specified. The designer is referred to *FHWA Report No. RD-86/108, Bridge Waterways Analysis Model: Research Report*, and the *WSPRO Users Manual*.

The designer should request that the appropriate cross sections be taken in the survey. Refer to Section 2.9.3.1.

3.3.3 STREAM CHANNEL

The natural or altered condition of stream channels affects the flow characteristics. Any work being performed, proposed, or completed that modifies a stream channel changes the hydraulic efficiency of the stream and must be studied to determine its effect on the stream flow. The effect on peak flows at the structure site due to modification of a stream's hydraulic characteristics must be determined. The engineer should be aware of plans for channel modifications which might affect the stream hydraulics. Similarly, the effects of storm drainage systems and other water-related projects should be investigated. Any modifications that affect stream alignment should be kept to a minimum, particularly for straightening meandering streams.

3.3.4 ICE AND DEBRIS

The quantity and size of ice and debris carried by a stream should be investigated and recorded for use in the design of drainage structures. The times of occurrence of ice or debris in relation to the occurrence of flood peaks should be determined, and the effect of backwater from ice or debris jams or recorded flood heights should be considered in using stream-flow records. The location of the constriction or other obstacle-causing jams, whether at the site or structure under study or downstream, should be investigated, and the feasibility of correcting the problem should be considered.

Under normal circumstances, one foot [0.3 m] freeboard is sufficient to permit passage of ice flow and debris. At locations where large pieces or quantities of debris are anticipated, the designer should consider increasing the freeboard.

3.3.5 TIDAL HYDRAULICS-BRIDGES AND CULVERTS

At this time, there is no single authoritative reference for guiding the engineer in modeling the effect of tidal

flows on the hydraulics of a structure. There are several circumstances in which the potential for tidal impacts is significant.

The size of the bridge opening may be controlled in a case of incoming (flood) tidal flows and peak storm discharge. Another consideration that may control the size of the opening is the storm surge at peak flood tidal flows. In the same manner, scour of the stream bottom is a concern on outgoing (ebb) tidal flows and peak storm discharges.

These and other combinations of tidal and storm flows must be considered in the sizing and design of a structure.

Refer to the following models, studies and reports as appropriate:

- any of the various tidal models for Chesapeake and Delaware Bays in combination with the non-tidal flow calculated above to produce the maximum flood which does not overtop the roadway or structure;
- existing FEMA studies;
- existing Coastal Engineering Research Center reports;
- tidal prism method given in HEC-18; or
- FESWMS (Finite-Element Surface-Water Modeling System).

3.3.6 BRIDGE DECK DRAINAGE

Bridge deck drainage systems direct runoff off the bridge and away from the traveled lanes. Scuppers or complex piping systems to carry roadway runoff are not always required. When not properly designed or routed, ancillary problems such as poor visibility, icing, and corrosion of structural members can result. Use the rational method to determine the runoff.

Bridge deck designs should conform with roadway standards for crown cross slope and superelevation. These standards are as follows:

- crown cross slope: 2 percent, and
- superelevation: 6 percent maximum, but 8 percent maximum for rural roadways.

Refer to the FHWA publication *HEC-21, Bridge Deck Drainage Systems*. This utilizes design nomographs based on grade, cross slope, design speed, design rainfall intensity, and bridge deck width, to determine an estimate of the bridge length without scuppers. Because bridge deck drainage systems can cause maintenance problems, their use should be avoided or at least minimized. Once it is determined that scuppers are required, additional criteria for scupper type, spacing, and location are provided.

Because bridges freeze before roadways, the allowable spread of water adjacent to the curb or parapet should be restricted to the width of the shoulder. On narrow bridges, with little or no shoulder, a minimum of 8 feet [2.4 m] of travel lane must be maintained in each direction.

The ten-year storm should be used as a minimum for design of deck drainage. Refer to *FHWA-SA-92-010, Design of Bridge Deck Drainage*.

Locating a bridge in a sag curve or in a flat grade less than 0.5 percent should be avoided to the extent possible. If such location cannot be avoided, the scuppers should be placed at the low point and, if necessary, one on each side of the low point where the grade elevation is 2.5 inches [60 mm] higher than the low point. The capacity of the scupper located at the low point should assume 50 percent efficiency, to

allow for the possibility of clogging. All scuppers in the sag should be of the same capacity. Additional scuppers must be added to provide adequate drainage based on the design year storm in accordance with the above-stated spread restrictions. Provisions should be made to collect water to prevent it from running on the bridge.

Several significant considerations should be made to provide the best possible design:

- Adequate longitudinal slope to move water off the bridge should be provided.
- All free-falling scupper outlet pipes should extend a minimum of 8 inches [200 mm] below the nearest superstructure element within 10 feet [3 m] of the scupper. Aesthetics should be considered in this.
- The drainage from a scupper outfall pipe should not be allowed to freefall to the ground if in so doing other deleterious effects (i.e. erosion, icy conditions, etc.) can result.
- Scupper downspout pipes, where needed, should always be attached to the exterior surface of the substructure and never placed within the concrete substructure elements. Water may freeze in the pipes and break the concrete. Refer to Figures 3-4 and 3-5.

3.3.7 TAX DITCHES

The Soil Conservation Service (SCS) builds and maintains ditches in poorly drained areas to drain fields and cultivated areas to improve the ability to farm these areas. These “tax ditches,” are located in Kent and Sussex Counties. When designing structures over waterways that may be tax ditches, the designer should contact SCS to determine whether a tax ditch is involved and, if so, the requirements to be met. The design should be checked to ensure that the footings for the proposed structure are located below the dredge line and beyond the limits of the tax ditch.

Figure 3-4
Scupper Downspout Support Bracket Elevation

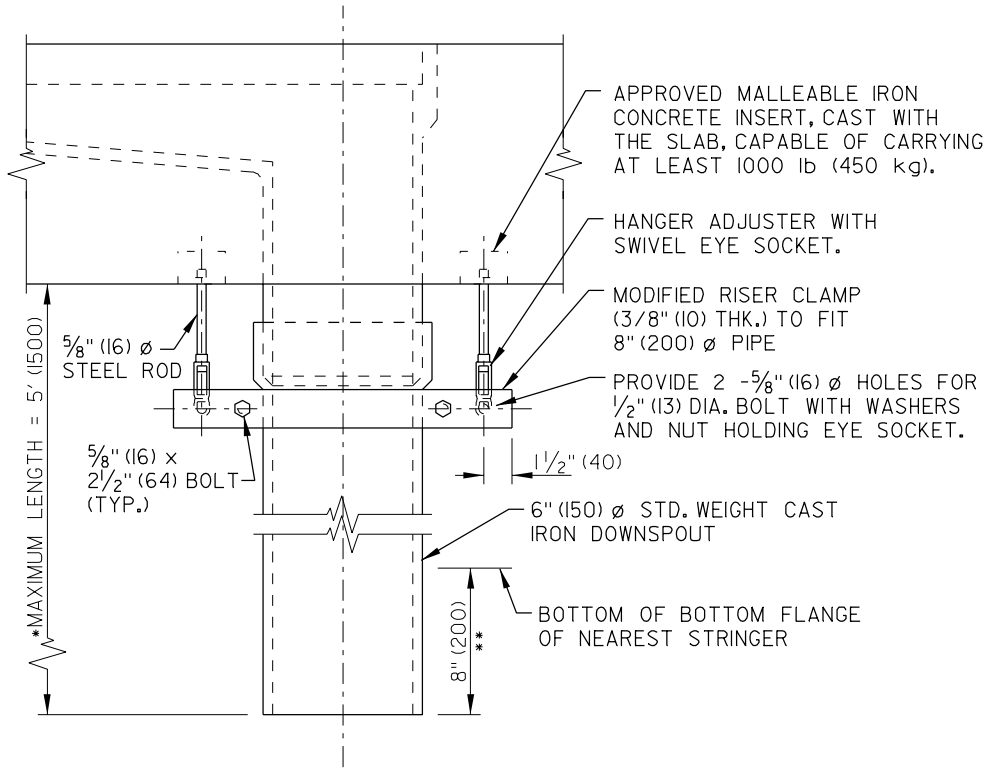

* WHEN MAXIMUM LENGTH IS EXCEEDED AN ADDITIONAL SUPPORT BRACKET IS NECESSARY AT LOWER PORTION OF PIPE.

** PROVIDED IT DOES NOT INTERFERE WITH MINIMUM UNDERCLEARANCE OVER ROADWAY AND/OR SHOULDER.

NOTES:
1. ALL EXPOSED MATERIAL, EXCEPT CAST IRON DOWNSPOUT, TO BE EPOXY COATED AS INDICATED FOR EPOXY COATED REBAR.
2. EXPOSED PORTIONS OF CAST IRON DOWNSPOUT TO BE COATED WITH COAL TAR EPOXY CONFORMING TO SPECIFICATION SSPC-16.

ELEVATION
NTS

Figure 3-5
Scupper Downspout Support Bracket Details

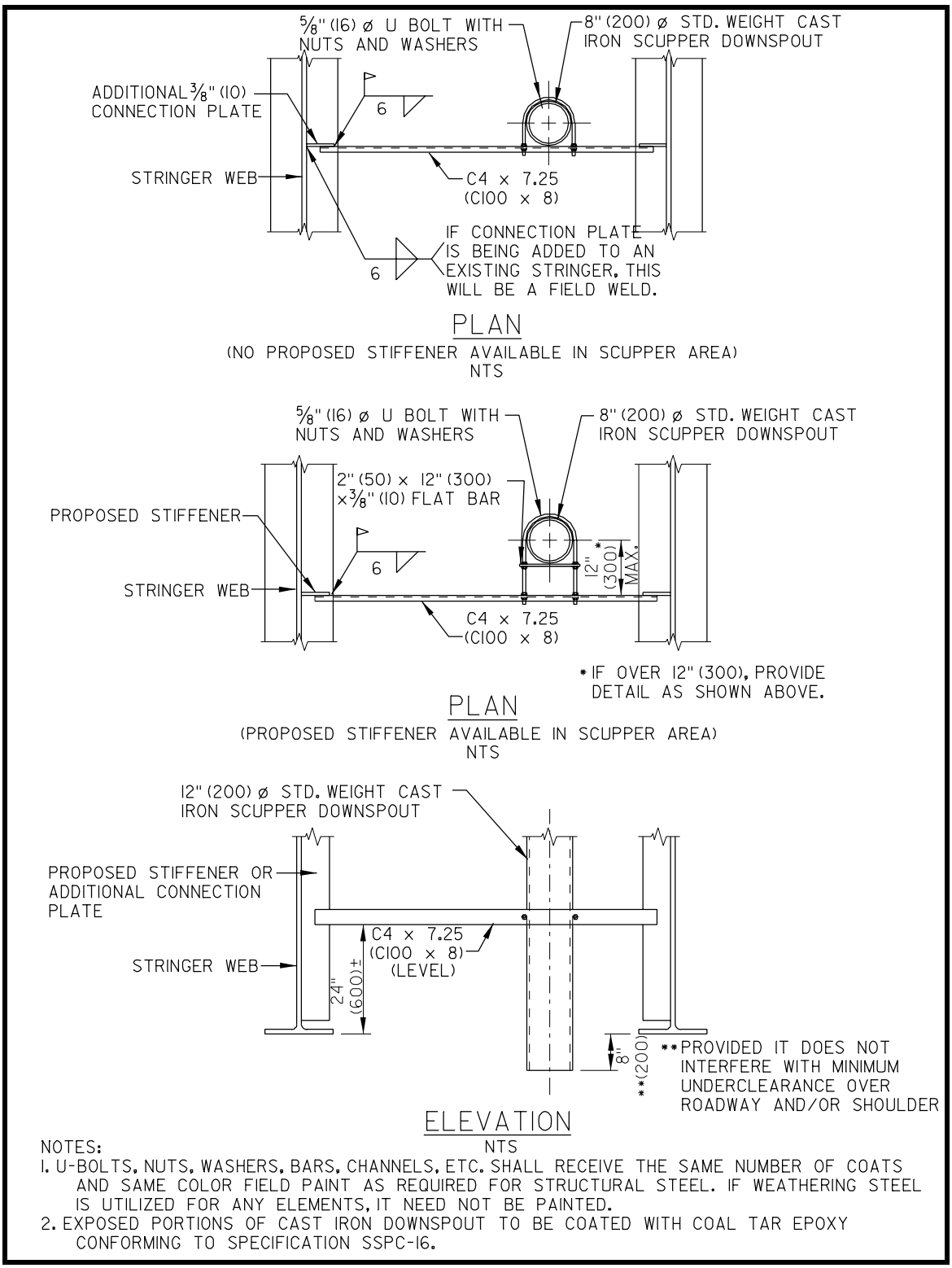

3.4 SCOUR EVALUATION AND PROTECTION

Changes in the bed level of a stream affect highway structures and may be described by three types of actions: (1) general scour (contraction scour), (2) local scour, and (3) degradation or aggradation of the stream channel. Scour and degradation are discussed in this section. Other types of erosion and aggradation are discussed in Section 3.5.

Every bridge over a waterway should be evaluated as to its vulnerability to scour in order to determine the appropriate protective measures. Most waterways can be expected to experience scour over a bridge's service life (which could approach 100 years). The need to ensure public safety and to minimize the adverse effects stemming from bridge closures requires the best effort to improve the state-of-practice of designing and maintaining bridge foundations to resist the effects of scour. Current information on this subject has been assembled in *HEC-18, Evaluating Scour at Bridges*.

Scour evaluations of new and existing bridges should be conducted by an interdisciplinary team composed of hydraulic, geotechnical, and structural engineers.

Bridges over waterways—both tidal and non-tidal—with scourable beds should withstand the effects of scour from a superflood (500-year flood) without failing.

Hydraulic studies should include estimates of scour at bridge piers and evaluation of abutment stability. Bridge foundations should be designed to withstand the effects of scour for the worst conditions resulting from floods. The design flood for scour will be the worst condition from the Q_{100} storm or the overtopping storm. If the overtopping flood is less than Q_{100}, then overtopping is the design flood; if overtopping is greater than Q_{100}, then Q_{100} is the design flood. The substructure must withstand scour resulting from the Q_{500} storm.

The geotechnical analysis of bridge foundations should be performed on the basis that all streambed material in the scour prism above the total scour line for the design flood (for scour) has been removed and is not available for bearing or lateral support. In addition, the factor of safety should be greater than 1.0 for conditions of scour resulting from the superflood.

Because of the limited accuracy of the procedures for predicting abutment scour, scour protection, such as riprap, may be provided for abutments instead of designing the abutment to resist scour.

The *AASHTO Specifications* contain requirements for designing bridges to resist scour. Particular attention is directed to Sections 2.6.4.4.2 and 3.7.5.

3.4.1 EVALUATION CRITERIA

3.4.1.1 Analysis Procedure

Scour analysis should be performed according to the FHWA publication *HEC-18, Evaluating Scour at Bridges*. Computer software HY-9, Scour at Bridges, should be used to check the manual calculations. Any countermeasures required should be designed using the methods in:

- *HEC-18, Evaluating Scour at Bridges,*
- *HEC-11, Design of Riprap Revetment,*
- *FHWA-HI-90-016, Highways in the River Environment,*

- *HEC-20, Stream Stability at Highway Structures*, or
- *HEC-23, Bridge Scour and Stream Instability Countermeasures*.

Minimum riprap size must conform with the requirements of R-5 in Section 712 of the Standard Specifications. Larger riprap may be specified if it is needed. The riprap in the channel shall be covered with a minimum of one foot of natural stream bed channel. A low-flow channel shall be formed at that point, if applicable.

3.4.1.2 Scourability of Rock

Evaluate the scour potential of rock by following the procedure for rock quality designation (RQD) in FHWA Mid-Atlantic Region Memorandum, Scourability of Rock Formations, to determine scourability. The following criteria represent the values to define rock quality and scourability of rock:

- The RQD value is a modified computation of the percent of rock core recovery that reflects the relative frequency of discontinuities and the compressibility of the rock mass and may indirectly be used as a measure of scourability. The RQD is determined by measuring and summing all the pieces of sound rock 6 inches [150 mm] and longer in a core run and dividing this by the total core run length. The RQD should be computed using NX diameter cores or larger and on samples from double tube core barrels. Scourability potential will increase as the quality of rock becomes poorer. Rock with an RQD value of less than 50 percent should be assumed to be soil-like with regard to scour potential.
- The primary intact rock property for foundation design is unconfined compressive strength (ASTM Test D2938). Although the strength of jointed rocks is generally less than individual units of the rock mass, the unconfined compressive strength provides an upper limit of the rock mass bearing capacity and an index value for rock classification. In general, samples with unconfined compressive strength below 250 psi [1724 kPa] are not considered to behave as rock. There is only a generalized correlation between unconfined compressive strength and scourability.
- The slake durability index (SDI as defined by the International Society of Rock Mechanics) is a test used on metamorphic and sedimentary rocks such as slate and shale. An SDI value of less than 90 indicates poor rock quality. The lower the value, the more scourable and less durable the rock.
- AASHTO Test T104 is a laboratory test for soundness of rock. A soaking procedure in magnesium and sodium sulfate solution is used. Generally the less sound the rock, the more scourable it will be. Threshold loss rates of 12 (sodium) and 18 (magnesium) can be used as an indirect measure of scour potential.
- The Los Angeles abrasion test (AASHTO T96) is an empirical test to assess abrasion of aggregates. In general, the less a material abrades during this test, the less it will scour. Loss percentages greater than 40 percent indicate scourable rock.

The other methods described in that memorandum should be used if required. For other soil types, existing surface borings and tests of soil samples should be interpreted.

3.4.1.3 Scour Evaluation Report

The scour evaluation report must contain the following items:

- table of contents;
- bridge description—bridge number, type, size, location, and National Bridge Inventory Record Item 113, Scour coding;
- executive summary of hydrologic and hydraulic methods, scour results, conclusions, and any countermeasure recommendations required, with plan and profile views showing scour depths and limits;
- scour computations (including computer input and output);
- bridge drawings, cross sections, soils information, test results, and other miscellaneous data; and
- references.

3.4.1.4 Plan Presentation

The following information will be provided in the Project Notes on the plans:

- a note stating that the structure has been analyzed for the effects of scour in accordance with the procedures described in *HEC-18, Evaluating Scour at Bridges*;
- scour analysis design flow volume, frequency, velocity, and water surface elevation;
- scour analysis check flow volume, frequency, velocity, and water surface evaluation;
- the calculated design scour depth; and
- the calculated check scour depth.

See Figure 3-6 for a sample scour project note.

Figure 3-6
Sample Scour Project Note

THE PROPOSED STRUCTURE HAS BEEN ANALYZED FOR THE EFFECTS OF SCOUR IN ACCORDANCE WITH HEC-18 - 'EVALUATING SCOUR AT BRIDGES' AND HEC-23 - 'BRIDGE SCOUR AND STREAM INSTABILITY COUNTERMEASURES.' SCOUR COUNTERMEASURES HAVE BEEN DESIGNED FOR THE WORST CASE OF THE OVERTOPPING FLOOD OR THE 500-YR FLOOD EVENT.

DESIGN EVENT	OVERTOPPING	DESIGN VELOCITY	6.22 FT/S
DESIGN DISCHARGE	535 CFS	DESIGN DEPTH OF FLOW	6.14 FT

3.5 STREAM STABILITY

3.5.1 STREAM STABILITY ANALYSIS

Erosion is considered to be the loss of material on side slopes and stream banks. Types of stream erosion include:

- scour (see Section 3.4);
- the natural tendency of streams to meander within the flood plain;
- bank erosion; and
- degradation.

These are all interrelated to some degree.

The computed velocity is a measure of the potential erosion and scour. Exit velocity from culverts will be computed on the assumptions shown in *HDS-5, Hydraulic Design of Highway Culverts*. (Use HY-8, Culvert Analysis, software based on HDS-5 for the computations.) Average velocity computed on the gross waterway will be the representative velocity for open span structures, furnished by computer analysis for water surface elevations.

Examples of highly erodible soil can be found in all areas of the state. Areas of loamy deposits, which are highly sensitive to erosion, are prevalent in Delaware. County SCS soil maps may aid in judging the in-situ material.

The designer must consider the downstream erosion potential in evaluating and sizing the structure. Under some conditions, any additional erosion would be intolerable. Thus, risk considerations should be included in the site study. It should be recognized that stream banks erode regardless of the presence of a highway crossing. Any alteration of erosion potential by a structure must be closely evaluated in judging the adequacy of a design.

Streams naturally tend to seek their own gradient through either degradation or aggradation. Degradation is the erosion of streambed material, which lowers the streambed. Aggradation is the transport and deposition of the eroded material to change the streambed at another location. The effect of the structure on degradation or aggradation of a stream must be evaluated in bridge crossing design.

The designer should evaluate the stability of the bed and banks of the waterway channel, including lateral movement, aggradation, and degradation, using *HEC-20, Stream Stability at Highway Structures*.

3.5.2 BANK PROTECTION

The most common method of bank protection is the use of rock riprap. Factors to consider in the design of rock riprap protection include:

- the stream velocity,
- the angle of the side slopes, and
- the size of the rock.

Filter blankets of smaller gradation bedding stone or geotextiles are used under riprap to stabilize the subsoil and prevent piping damage. Riprap bank protection should terminate with a flexible cut-off wall.

The designer should specify a minimum blanket thickness of 18 inches [460 mm] for embankment protection and 24 inches [610 mm] for slope protection along stream banks and for streambeds. Refer to *FHWA-HI-90-016, Highways in River Environment*, and *HEC-11, Design of Riprap Revetment*. See Figure 3-7 for typical riprap details and an example of a riprap installation.

3.5.3 CHANNEL MODIFICATIONS

A channel change is the physical relocation of the streambed channel. A channel improvement is the clearing and dressing of stream bank and overbank slopes, or excavation of overbank and stream bank areas but with no change of the streambed profile.

The primary objective in the design of a highway stream crossing is to avoid interruption in the behavior of the stream. Channel modifications should be made only where necessary to accommodate streamflow, and where regular maintenance can maintain the improvements or no maintenance is needed.

The preferred procedure for dealing with channel changes is:

- establish the nature of the existing stream (slope, section, meander pattern, stage-discharge relationship),
- determine limits for changes in the various stream parameters,
- duplicate existing conditions where possible, within established change tolerances, and
- evaluate constructibility, considering water table elevations, streambed materials, and site conditions.

For more guidance, refer to AASHTO's *Highway Drainage* and *FHWA-HI-90-016, Highways in the River Environment*.

Figure 3-7
Typical Riprap Detail

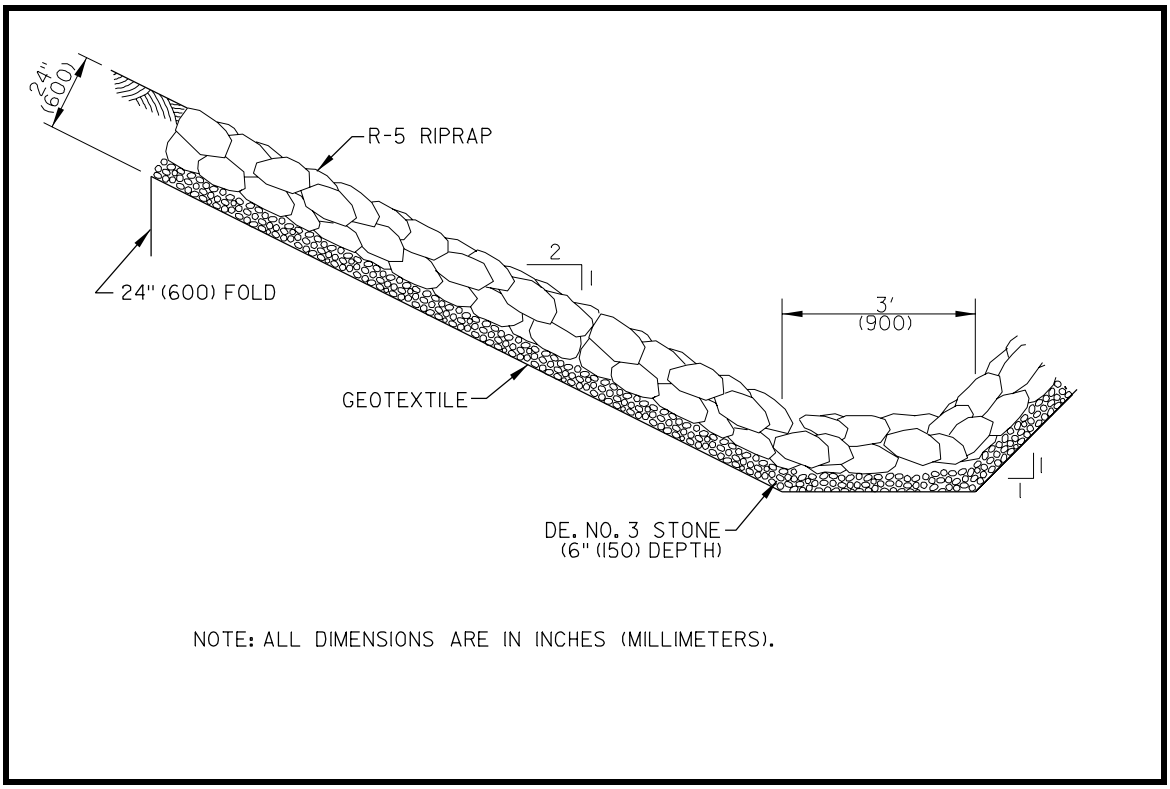

3.6 PLAN PRESENTATION

The following hydrological and hydraulic information is required on the plans of structures over streams and should be included in the Project Notes on the General Notes sheet.

HYDRAULIC DATA

Drainage Area sq. miles [km^2]
Design Frequency years
25 yr Flood Elevation ft [m]
Design Discharge cfs [m^3/s]
Proposed Opening sf [m^2]

Other information that is desirable and is required in the Hydraulic Report, as directed by the Bridge Design Engineer, includes the following:

Overtopping Elevation (Locat.) ft [m]
Overtopping Discharge ft^3/s [m^3/s]
Overtopping Frequency yr.
Overtopping Velocity (Based on Overtopping Discharge) ft/s [m/s] [Note: Overtopping is permitted only if qualified by a risk analysis.]

Design Backwater ft [m]
Design Backwater Elevation ft [m]
Discharge at Q_{100} ft^3/s [m^3/s]
Backwater at Q_{100} ft [m]
Backwater Elevation at Q_{100} ft [m]

Velocity at Q_{100} ft/s [m/s]
Historic Highwater Elevation ft [m]
Ordinary Highwater Elevation ft [m]
Total Waterway Provided ft^2 [m^2]
Design Waterway Provided ft^2 [m^2]

FEMA 100-Yr. Flood plain Elevation (Regulatory) ft [m]
FEMA 100-Yr. Floodway Elevation (Regulatory) ft [m]

Average Velocity at Q_{des} ft/s [m/s]
Average Velocity at Q_{xx} ft/s [m/s]

For tidal areas include the following:

Mean High Water Elevation ft [m]
Mean Low Water Elevation ft [m]
Vertical Under Clearance ft [m]

Refer to Section 3.4.1.4 for plan presentation of scour analysis data. Additional site-specific information may be required and noted on the plans as determined by the Bridge Design Engineer. Descriptions of terms for hydraulic data follow. See Figure 3-8 for a graphical depiction of the definitions.

- Documentation of **Historic High Water** includes year(s) of occurrence and source of information.
- **Ordinary High Water** is required information for the "404" permit. From instructions and definitions furnished by the Corps of Engineers for "404" permit applications, the Ordinary High Water mark means the line on the shore established by the fluctuation of water and indicated by physical characteristics such as a clear, natural line impressed on the bank, shelving, changes in the character of soil, destruction of terrestrial vegetation, the presence of litter and debris, or other appropriate means that consider the characteristics of the surrounding areas. Ordinary High Water will usually be established by the field survey of the site. Where Ordinary High Water is not determined by survey of the physical characteristics, it may be estimated by computation of the normal water surface elevations at the 2-year frequency (Q_2).
- The **Design Discharge** as computed by the methods noted in this manual. When

other methods are applicable and are used to compute the Design Discharge, it should be noted in the hydraulic report.

- **Design Headwater**: As a conservative estimate of the headwater for design, the elevation of the water surface under unrestricted conditions at the upstream face of the bridge is used to compute clearance. It is the assumed condition where the water surface profile is computed at the design discharge (Q_{des}) with gradually varied flow. This computed highwater elevation should always be compared to the highwater elevation of record as furnished by the field survey to determine whether additional grade adjustment should be made for the extreme condition.
- **Clearance** for debris or other purposes is measured from the Design High Water Surface at the bridge and the low point of the superstructure and should be noted on the plans in the Elevation view of the Plan and Profile sheet as: "Design HW Clear.= xx.x ft [m]."
- The **Average Velocity** is computed from the gross area at the bridge opening below Design flow depth, i.e., Q/A_n, where A_n is the gross waterway area in the constriction at Design High Water depth. Design Waterway Provided is the net flow area below the Design High Water elevation. Total Waterway Provided is the net flow area below the bridge. Total Waterway and Design Waterway will be the net flow area (i.e., deduct pier area). Where the stream approach is skewed, all waterway areas should be measured normal to the stream flow, i.e., corrected by the bridge length times the cosine of the skew angle. The projected area of the piers should likewise be corrected. The plans should indicate that the waterway areas are normal to stream flow when corrected for a skewed approach.
- **Design Backwater Elevation**: For convenience, the amount of design backwater is measured as shown on the profile section in Figure 3-8, for the computed design discharge (Q_{des}). Although this may not be the exact location of the maximum high water, it is accurate enough to provide a reasonable estimate. For critical locations where the exact backwater computation might affect the design, i.e., where a FEMA floodway exists, the designer should refer to the methods given in Chapter IV of *HY-1, Hydraulics of Bridge Waterways*.
- The location of the **Overtopping Elevation** for the bridge and approaches may be referred by stationing (e.g. Station 6+95.7) or by distance from the bridge (e.g. 375 feet [115 m] south of bridge abutment No. 1). The location of the overtopping may occur on the bridge. The overtopping roadway elevation may be either the centerline elevation or the high shoulder elevation in a superelevated section.
- **Freeboard**, as applied to bridge hydraulics, is the vertical distance from the design headwater elevation to the low point of the superstructure. This distance is recorded on the Hydraulic Assessment Checklist (Figure 3-1). Where the design headwater elevation is higher than the low point of the superstructure, there is no freeboard.

For culverts, the design headwater elevation is 1 foot [0.3 m] below the top of the slope to prevent overtopping.

Figure 3-8
Typical Section Along Stream

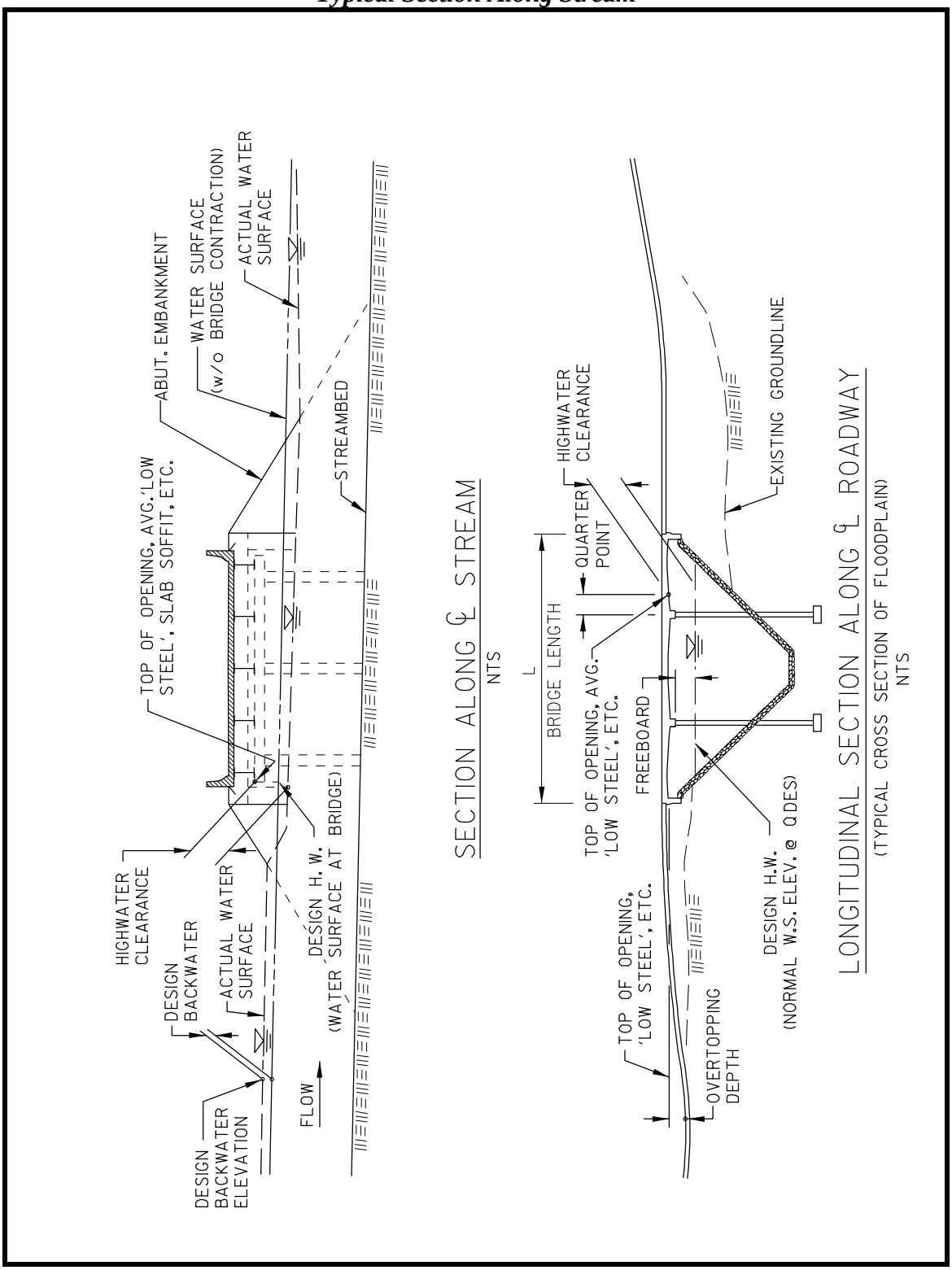

Chapter Four

Bridge Load Rating

4.1 INTRODUCTION

The National Bridge Inspection Standards (NBIS) requires each highway department to inspect, prepare reports, and determine load ratings for structures defined as bridges located on all public roads. The NBIS is contained in 23 CFR 650, Subpart C. In Delaware, bridges are defined as having an opening of greater than 20 sq ft [1.86 m^2]. The federal definition of a bridge is "a structure including supports erected over a depression or an obstruction, such as water, highway, or railway, and having a track or passageway for carrying traffic or other moving loads, and having an opening measured along the center of the roadway of more than 20 feet between undercopings of abutments or spring lines of arches, or extreme ends of openings for multiple boxes; it may also include multiple pipes, where the clear distance between openings is less than half of the smaller contiguous opening". Only bridges that meet the federal definition are included in the National Bridge Inventory.

For structural types, materials, and analysis methods not dealt with in this manual, contact the Bridge Management Section.

4.1.1 RESPONSIBILITY

Most bridges in Delaware are state owned and operated. In Delaware, bridges that are not owned and operated by the state are usually owned by cities (Wilmington, Elsmere, and Milford), railroads (CSX, Norfolk Southern), Delaware River and Bay Authority (DRBA), the Department of Natural Resources and Environmental Control (DNREC), or the Army Corps of Engineers. Inspection and rating of these bridges meeting federal requirements are the responsibility of the owner and must be conducted in accordance with the NBIS. Owners forward their bridge inspection and rating results to the Bridge Management Section, which then consolidates the results and forwards them to FHWA for inclusion in the National Bridge Inventory (NBI).

4.1.2 ASSUMPTIONS

Engineers must make assumptions in order to efficiently analyze existing bridges. This is due to the wide variety of structural materials available (e.g., steel, concrete, wrought iron, timber, masonry and/or combination thereof), assortment of structural types, and variations in quality and strength of the materials. These assumptions consider the policies and procedures with which the structures were designed, the recommendations in AASHTO's *Manual for Condition Evaluation of Bridges*, and policies of the DelDOT Bridge Design Section included in this chapter. For new structures, standard design criteria shall be used. During

rehabilitation, material testing is usually performed and these values shall be used.

4.1.3 LOAD RATING LEVELS

Load rating analysis of bridges is performed to determine the live load that structures can safely carry. Bridges are rated at three different stress levels, referred to as Inventory Rating, Operating Rating, and Posting Rating.

Inventory rating is the capacity rating for the vehicle type used in the rating that will result in a load level which can safely utilize an existing structure for an indefinite period of time. Inventory load level approximates the design load level for normal service conditions.

Operating rating will result in the absolute maximum permissible load level to which the structure may be subjected for the vehicle type used in the rating. This rating determines the capacity of the bridge for occasional use. Allowing unlimited numbers of vehicles to subject the bridge to the operating level will compromise the bridge life. This value is typically used when evaluating overweight permit vehicle moves.

The posting rating is the capacity rating for the vehicle type used in the rating that will result in a load level which may safely utilize an existing structure on a routine basis for a limited period of time. The posting rating for a bridge is based on inventory level plus a fraction of the difference between inventory and operating. Posting level and fraction is determined using the criteria shown in Figure 4-2.

Structural capacities and loadings are used to analyze the critical members to determine the appropriate load rating. This may lead to load restrictions of the bridge or identification of components that require rehabilitation or other modification to avoid posting of the bridge.

4.1.4 LOAD RESTRICTION POSTING

When a bridge is not able to safely carry the loads allowed by State Statute, it is posted for its reduced capacity. The Bridge Management Section implements load restrictions by preparing a “Load Restriction Resolution,” which is signed by the Chief Engineer. The Bridge Management Section then distributes letters to the proper authorities, including local fire companies, school transportation directors, the Delaware Authority for Regional Transport (DART), Senators, and Representatives. Upon completion of replacement or rehabilitation of a posted structure, the Bridge Management Section prepares a “Removal of Load Restriction Resolution,” signed by the Chief Engineer and distributed as above.

It is the Department’s policy to restrict loads on bridges when the posting-rating factor drops below one for any of the Delaware legal truckloads. See Figures 4-2 and 4-3. The minimum posting is 3 tons [2.7 metric tons]. For further information on posting, contact the Bridge Management Engineer.

Figure 4-1a
Sample Load Rating Plan Sheet Note (Bridges Required To Be Rated)

LOAD RATINGS

```
AASHTO HS20-44 (MS 18) TRUCK (36 TONS)
     OPERATING RATING:
          CONTROL POINT - SPAN 1 @ 5.00 TENTH (ULTIMATE MOMENT CAPACITY)
          POSITIVE ACTION RATING FACTOR = 2.55
          LOAD RATING =  91.9 TONS
INVENTORY RATING:
          CONTROL POINT - SPAN 1 @ 5.00 TENTH (ULTIMATE MOMENT CAPACITY)
          POSITIVE ACTION RATING FACTOR = 1.53
          LOAD RATING =  55.0 TONS


DELAWARE 4 AXLE SINGLE UNIT S437 TRUCK (37 TONS)
     OPERATING RATING:
          CONTROL POINT - SPAN 1 @ 5.00 TENTH (ULTIMATE MOMENT CAPICITY)
          POSITIVE ACTION RATING FACTOR = 2.08
          LOAD RATING =  76.9 TONS
     INVENTORY RATING:
          CONTROL POINT - SPAN 1 @ 5.00 TENTH (ULTIMATE MOMENT CAPACITY)
          POSITIVE ACTION RATING FACTOR = 1.24
          LOAD RATING =  46.0 TONS
```

Figure 4-1b
Sample Load Rating Plan Sheet Note (Bridges Not Required To Be Rated)

LOAD RATINGS

THIS PROJECT DOES NOT CHANGE THE LOAD RATING OF THE BRIDGE.

A CURRENT LOAD RATING OF THE BRIDGE IS ON FILE AND MAY BE OBTAINED FROM THE BRIDGE MANAGEMENT SECTION.

Figure 4-2
Safe Load Posting Decision Flow Chart

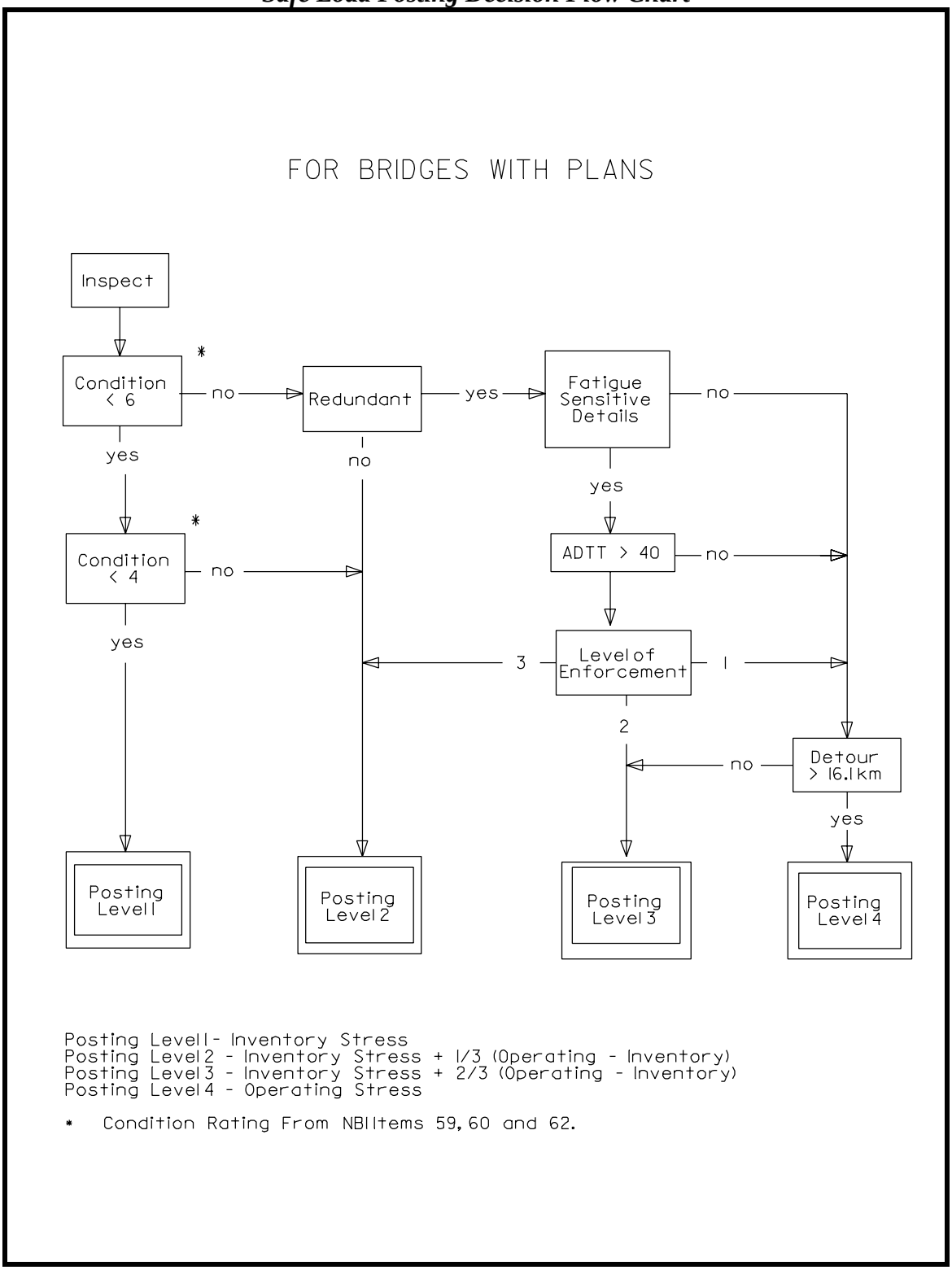

Figure 4-3
Enforcement Levels

Level of Enforcement	Degree of Enforcement of Load Limit
1	Vigorous enforcement of weight limit (Interstate, US13 and US113)
2	Moderate enforcement of weight limit (Delaware and US Routes except for those in Level 1)
3	Minimal enforcement of weight limit (usually local roads)

4.2 BRIDGE INSPECTIONS

Prior to rating an existing bridge, the engineer must perform or review results of a recent detailed inspection. The engineer rating the bridge also needs a complete description of the bridge, as-built plans, any modifications since it was built, and its present condition. In lieu of plans, a detailed set of measurements and/or sketches from actual field measurements will be needed.

By law, all bridges on the National Bridge Inventory are required to be inspected at least every two years. Inspection of bridges is done in conformance with AASHTO's *Manual for Condition Evaluation of Bridges*, FHWA's *Recording and Coding Guide for Structure Inventory and Appraisal of the Nation's Bridges*, DelDOT's *Bridge Management Manual*, and DelDOT's *Element Data Collection Manual*. Some structures require more detailed and different types of inspections to determine their actual condition and capacity. Bridges in poor structural condition require more frequent inspections. Bridges are not typically rated as a part of their routine biennial inspections. However, they may be rated as part of any and all inspections at the discretion of the Bridge Management Engineer. Load rating of bridges during inspections is usually prompted by discovery of obvious loss of section, continuing deterioration, and suspected loss of capacity.

When conditions warrant, reduced sections or reduced allowable stresses should be used to obtain a load rating that indicates the actual condition and capacity of the structure. Areas of deterioration would be given special attention during field inspection, since a primary member that is reduced in section may control the capacity of the structure.

4.2.1 INSPECTION TYPES

The following inspection types are included in the NBI Standards: routine; underwater; fracture critical; and special. Routine inspections are regularly scheduled inspections consisting of observations and/or measurements needed to determine the physical and functional condition of the bridge, to identify any changes from initial or previously recorded conditions, and to ensure that the structure continues to satisfy present service requirements. An underwater inspection is an inspection of the underwater portion of a bridge substructure and the surrounding channel

which cannot be done visually at low water by wading or probing, generally requiring diving or other appropriate techniques. A fracture critical inspection involves a hands-on inspection of a fracture critical member or member components that may include visual or other nondestructive evaluation. A special inspection is an inspection scheduled at the discretion of the bridge owner, used to monitor a particular known or suspected deficiency. A special inspection can be scheduled with the Bridge Management Section if the structural deficiencies are not documented in sufficient detail in previous reports. All inspection reports are filed and available for review in the Bridge Management Section.

4.2.2 INSPECTION FILES

After field inspection, the Bridge Management Section enters the inspection results into a Pontis database. The Bridge Management Section maintains a file of inspection results for each bridge, along with maintenance records, contract plans, etc. This information indicates the current condition of the bridge, which can then be used in load rating calculations of the structural elements.

4.3 BRIDGE REPLACEMENT AND REHABILITATION RATING

It is the Department's policy to design new bridges and to rehabilitate existing ones for AASHTO live load requirements. This section will discuss the ratings required for new and rehabilitated bridges.

4.3.1 REQUIRED RATINGS

Department policy is to design all new and rehabilitated bridges on state-maintained roads, for an inventory load rating factor of 1.0 or greater for all Delaware legal loads as given in Figure 4-2. In addition, bridges must be designed to fulfill AASHTO design load requirements for LRFD. (Refer to design requirements in this manual.) If a bridge is not designed for the Delaware legal load, the Project Manager shall submit a Design Exception for approval. Design Exceptions are prepared according to Chapter 2, outlining the justification for deviation from the standard. Design Exceptions are recommended by the Project Manager and forwarded through Department Channels for approval by the Chief Engineer. On some rehabilitation projects, such as historical or temporary bridges, however, the scope of work may be limited, making it impractical to provide this minimum rating for the bridge. In this case the bridge shall be designed for an inventory rating as close to 1.0 as possible for the controlling load.

4.3.2 RATED STRUCTURES AND ELEMENTS

All bridge replacement and most bridge rehabilitation projects shall be rated. DelDOT policy is to rate only the bridge superstructure. The need for rating replacement or new structures is to determine the actual load capacity. Load rating of rehabilitated structures is required when:

- The bridge has not been previously rated (check with the Bridge Management Section to verify that a current rating of the superstructure using BRASS is on file).
- Testing provides actual material strength.
- Modifications are made that change dead loads on the structure.

- Inspection reveals section loss of members.
- Structural members are replaced or repaired (excluding painting).

When in doubt about the need to do a load rating, check with the Bridge Design and Bridge Management Engineers.

4.4 LOAD RATING METHODS

Load rating methods include analysis and, in some cases, load testing. The Department has a preferred method of load rating and computer software that should be used to perform the analysis. For some types of bridges, other methods of load rating may be required. Load testing may be used under certain circumstances with appropriate methods and procedures.

4.4.1 ANALYSIS METHODS

Analysis methods recognized by the Department include the Load Factor Method, Working Stress Design Method, and Load and Resistance Factor Method. These methods vary based on placing the factor of safety on the loads, structural resistance, or a combination of both.

4.4.1.1 Load Factor Method

The required method of load rating in Delaware is the load factor design (LFD) (ultimate strength) method except as noted in Section 4.2.1.2. Ratings are determined by calculating the ratio of the yield strength of the member to the factored loads, as outlined in Chapter 6 of AASHTO's *Manual for Condition Evaluation of Bridges*.

4.4.1.2 Working Stress Design Method

If rating by the LFD method is not possible, the working (allowable) stress (ASD) method should be used. The working stress method should be used to load rate timber bridges. Other types of bridges may be rated by the working stress design method if approved by the Bridge Management Engineer.

4.4.1.3 Load and Resistance Factor Method

Load and resistance rating methods are under development and not used at this time.

4.4.2 TOOLS

Ratings shall be done using the current version of Wyoming Department of Transportation's BRASS Girder computer program. Note that BRASS data input is in U.S. customary units.

Ratings for timber bridges shall be done by the working stress method using BRASS Girder.

When BRASS cannot be used due to geometry, structure type, or material, other computer programs such as STAAD and other advanced techniques such as finite element analysis, AASHTO-ware products, or hand calculations may be used with approval of the Bridge Management Engineer.

4.4.2.1 BRASS Data Set

Rating input data for each bridge are stored in a BRASS ASCII data file. This data file is developed in a command format. Each line begins with a command which

describes data entries referred to as parameters. A sample BRASS data set is shown in Figure 4-4. The BRASS data set is the input for running the BRASS program and calculating the load rating of the bridge. Data sets are prepared for each span of a bridge. An exception is simple span bridges consisting of multiple identical spans where only the worst-case span needs to be analyzed. On continuous spans, all spans should be analyzed due to the influence loads each span has on the others. When complete, the data set shall be forwarded to the Bridge Management Section for use in:

- updating the National Bridge Inventory and
- modifying the overweight vehicle permit routing system.

4.4.2.2 Data Set Standards

Title (TLE) cards shall be the first cards in the data set. Title cards shall contain standard information including bridge number, span number, road carried, road or feature crossed, total number of spans, bridge type, contract number built or rehabilitated under, the year built, and the name of the rater.

Comment cards must be included in the data set and include any and all assumptions made by the Engineer, such as dead load and live load distribution.

File names shall consist of:

For single span: C-NUM.DAT
For multiple span: C-NUM_#.DAT

where:

C = County Code (1,2, or 3 for New Castle, Kent and Sussex Counties, respectively)

NUM = Three-digit bridge number (add a fourth digit suffix to bridge number if required)

= Span number or description of element rated

Examples: 1-001.dat
1-001A.dat
1-001_s1.dat

Do not use spaces or special characters in the data file name.

4.4.3 LOAD TESTING

Load rating by load testing may be feasible in special cases such as the following:

- When analytical results provide a posting or operating rating factor less than one, but the bridge is otherwise showing no visual signs of distress.
- When record construction plans for the bridge are not available.
- Special types of bridges that cannot be analytically rated.
- When calibrating BRASS data including distribution, fixity, or composite action.

The Department performs load testing by driving a truck of known axle weights over a bridge. Stresses are then measured in the load-carrying members with strain gauges and specially designed data analysis equipment. These axle weights and actual measured stresses are used to calibrate the BRASS input data. A more realistic rating of the bridge can then be obtained for all Delaware legal loads.

Figure 4-4
Typical BRASS Load Rating Data Set

```
TLE BRIDGE 1-218, N.C. 302 OVER WHITE CLAY CREEK, BUILT 1991
TLE 2 SPAN STEEL CONTINUOUS, COMPOSITE, CONTRACT 84-071-03,INTERIOR STRINGER
ANL 1,0,4
XST 1,WN36X135
XSA 1,50
XSC 102.0,8.5,2.0,0.0,0.0,0.0
XST 2,WN36X135
XSA 2,50
XSG 6,12,5,3.94
XSG 7,12,5,7.06
SPA 1,60.0,5
SPC 1,45.0,1,2
SPD 60.0,2
FIX 0,1,0,1,1,0
SPA 2,60.0,5
SPC 2,15.0,2,1
SPD 60.0,1
FIX 1,1,0,0,1,0
PS1  , ,4.5,50
PS2 8,,60
COM N.C.D.L. = 939 (DECK) + 25 (HAUNCH) + 118 (SIP FORM + CONC IN SIP)
COM C.D.L. = 298 (PARAPETS)
DLD 1,1.082,0.298
LDE 1,1, ,DIAPHRAGMS, UTILITY HANGERS, SPLICE PLATES
PTD 0.0,0.12,1,14.0
PTD 0.0,0.18,1,20.0
PTD 0.0,0.18,1,24.0
PTD 0.0,0.12,1,34.0
PTD 0.0,0.18,1,40.0
PTD 0.0,0.18,1,44.0
PTD 0.0,0.285,1,45.0
PTD 0.0,0.12,1,54.0
PTD 0.0,0.12,2,14.0
PTD 0.0,0.18,2,20.0
PTD 0.0,0.18,2,24.0
PTD 0.0,0.12,2,34.0
PTD 0.0,0.18,2,40.0
PTD 0.0,0.18,2,44.0
PTD 0.0,0.12,2,54.0
LLD 3, 1.605,,,,,
TR1 HS20T,S220,S335,S437,T330,T435
TR2 T540
DES 3, 1
INV 1.3, 1.0, 1.67, 1.0, 1.0, 1.0
OPG 1.0, 1.0, 1.67, 1.0, 1.0, 1.0
PST 1.3, 1.0, 1.00, 1.0, 1.0, 1.0
SLD 1.0, 1.0, 1.0, 1.0, 1.0, 1.0
SL1 104,4
SL2 0,15
SL1 105,4
SL2 0,15
SL1 200,5
SL2 0,15
SL4 50, ,1,0.5,7.5
```

Figure 4-5a
Axle Loadings and Spacings

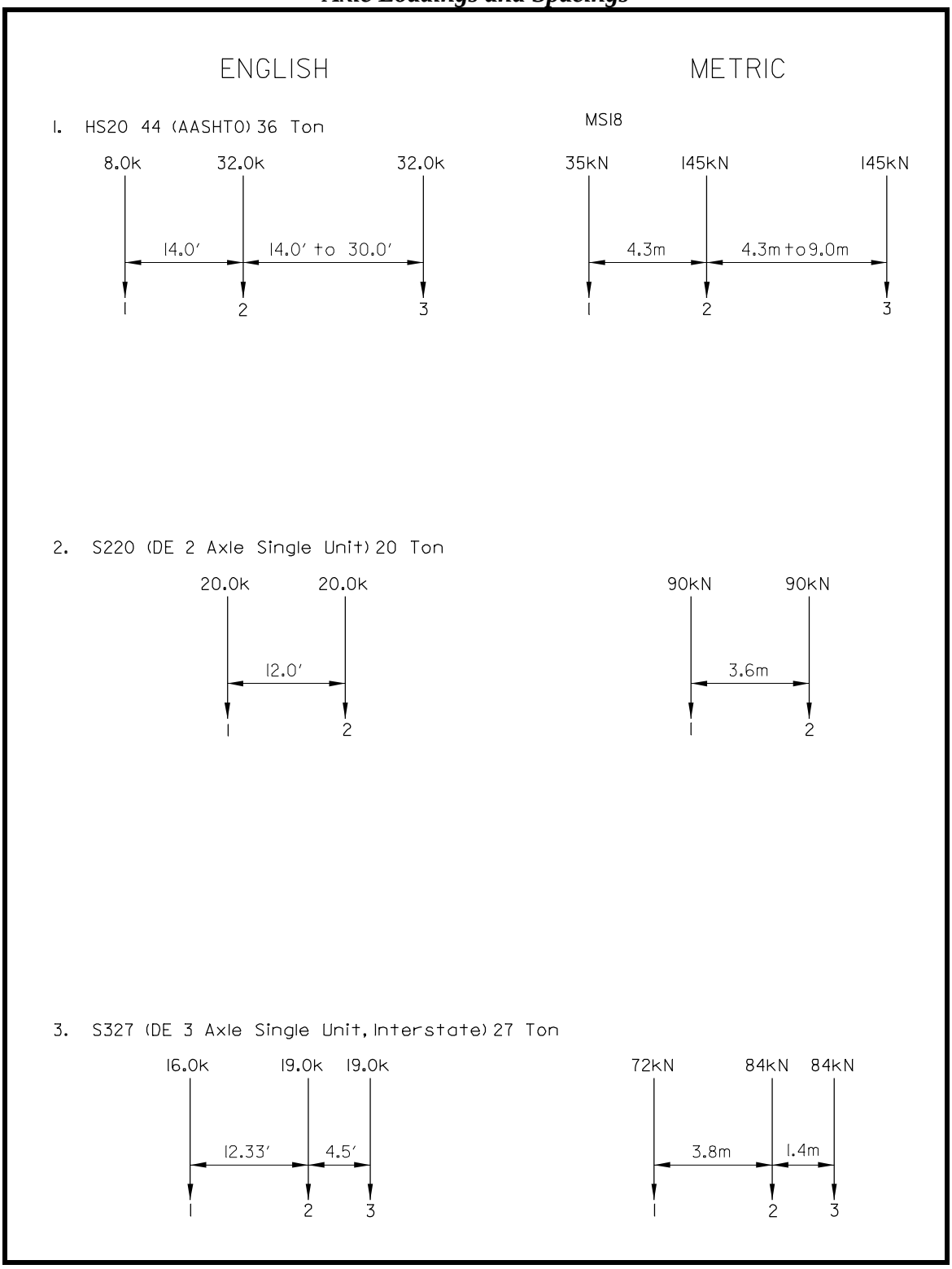

Figure 4-5b
Axle Loadings and Spacings

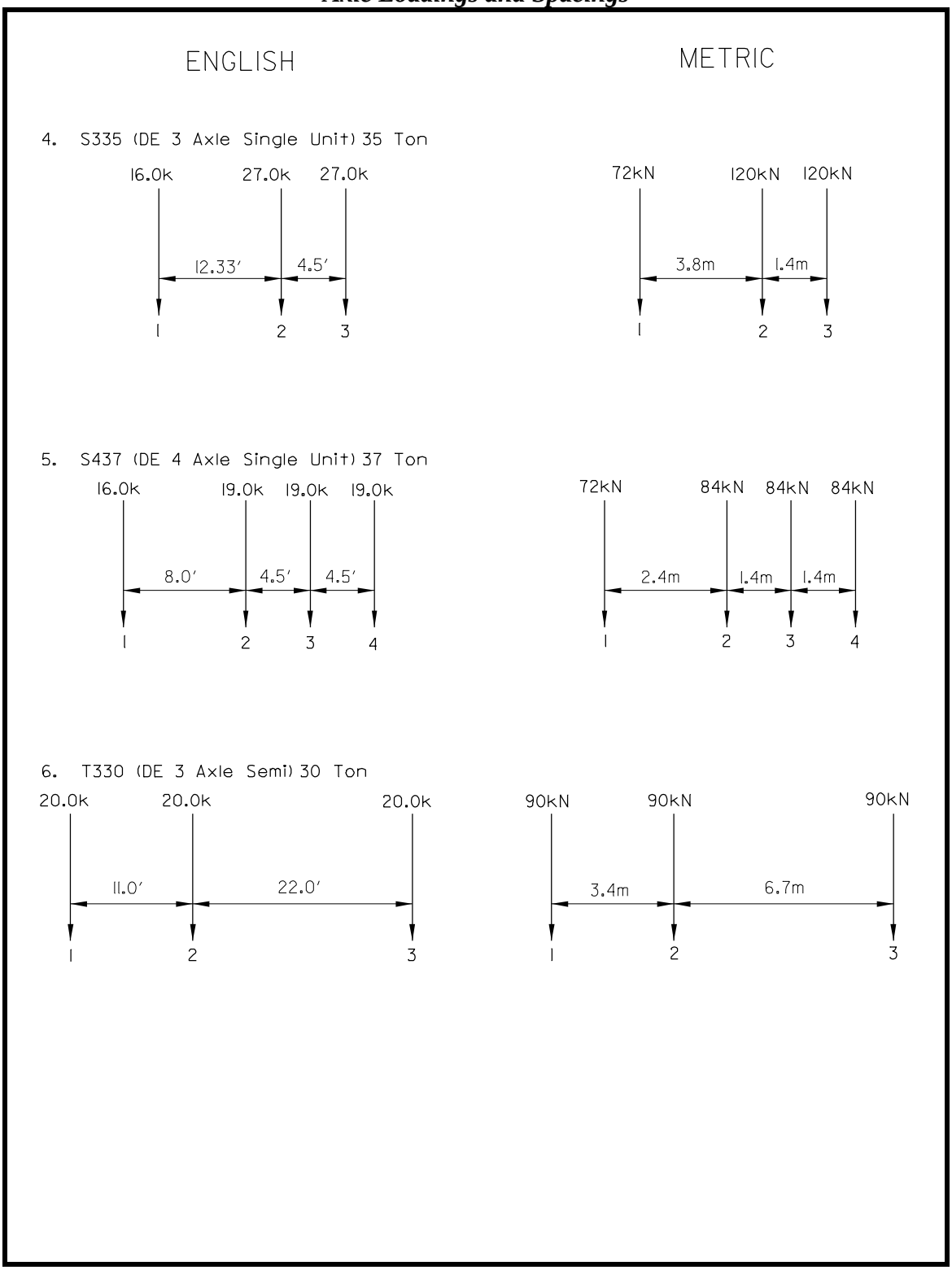

Figure 4-5c
Axle Loadings and Spacings

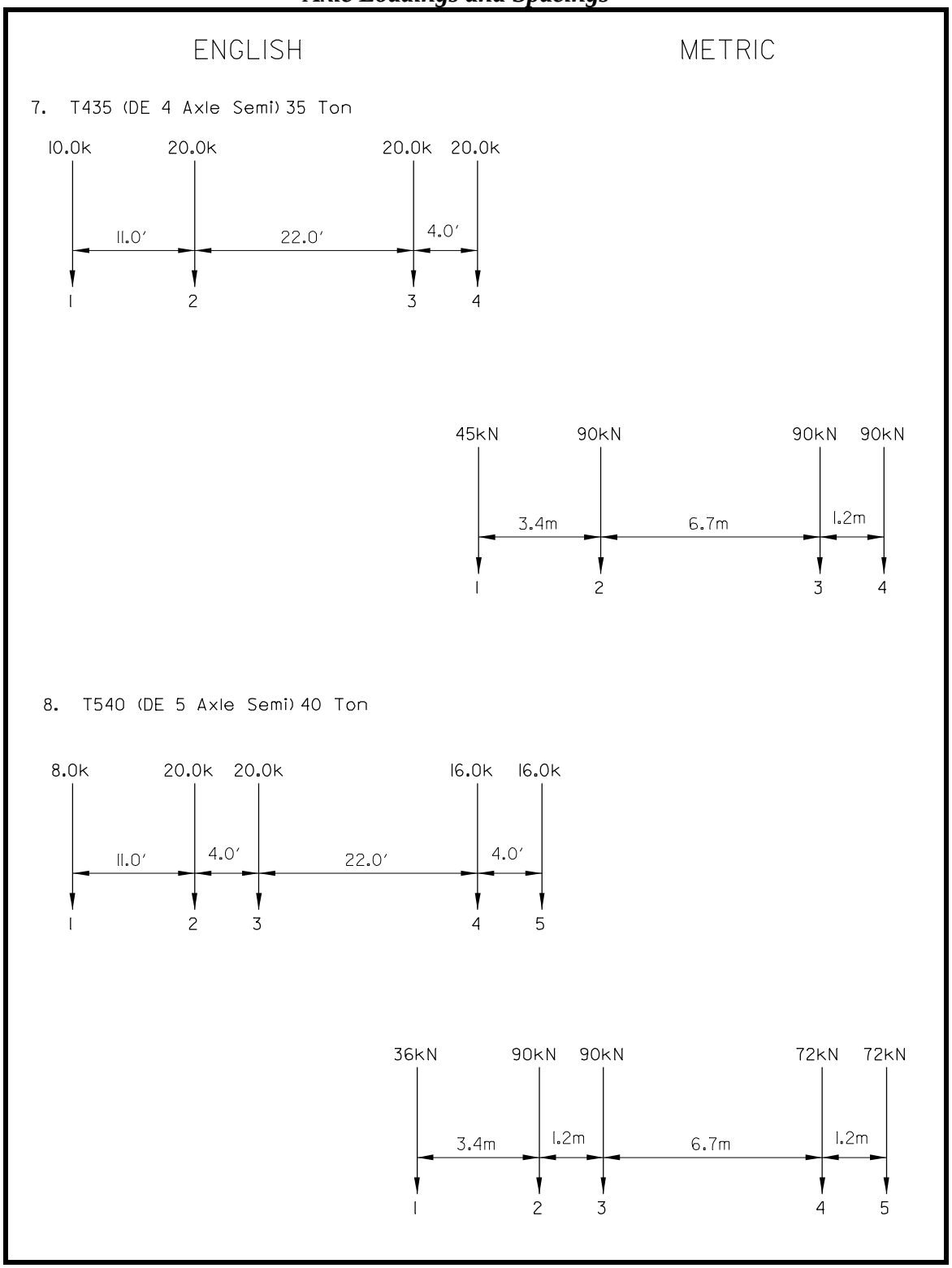

4.5 ANALYTICAL STEPS IN LOAD RATING

Analytical steps in load rating are detailed procedures that an engineer goes through in performing a load rating analysis.

The analytical steps required to rate any member are independent of the role played by the member in the overall structure. The method of analysis within any of the steps will vary for each member, depending on the member and the choice of load factor or working stress method, but the function of the calculations will be the same. The following analytical steps are required:

1. Determine section properties.
2. Determine allowable and/or yield stresses.
3. Calculate section capacities.
4. Determine dead load effects.
5. Calculate dead load portion for section capacity.
6. Calculate live load effect.
7. Calculate live load impact and distribution.
8. Calculate allowable live load factor.

The stress levels used to analyze critical members and determine the appropriate inventory and operating rating are outlined in AASHTO's *Manual for Condition Evaluation of Bridges*.

4.5.1 RATED MEMBERS

It is Department policy to rate only the primary load-carrying members in a bridge. This is normally the slabs, girders, trusses, or arch ring. Concrete box culverts are rated as rigid frames.

Not included in the load rating are the deck slab, piers, abutments, and foundations. The condition of these elements shall be considered, and they shall be assumed to safely carry the loads transmitted to them unless there is evidence of serious deterioration.

4.5.2 PLAN SHEET RATING NOTES

When ratings are performed in conjunction with the preparation of design drawings, the analysis results are included in the project notes on the plans. It is not necessary to place the results of every Delaware legal load truck on the plans unless a rehabilitated bridge is not designed for the full Delaware legal load and requires posting. Department policy is to place load rating results on the plans for the HS20-44 and controlling truck only. Figure 4-1a is the format used for recording the bridge load rating on design plans.

Bridge maintenance and rehabilitation contracts that do not affect the load-carrying capacity of the structure shall include the optional plan sheet note given in Figure 4-1b.

4.6 LIVE LOADS

Bridge capacity depends upon bridge geometry, material strength, condition, structure type, etc. As related to trucks, a bridge's capacity depends not only upon the gross weight, but also upon the number and spacing of the axles and the distribution of load between the axles. Since it is not practical to rate a bridge for the countless axle configurations, Delaware's highway bridges are rated for six standard vehicles which are representative of actual vehicles on the highways. DelDOT's standard rating trucks are HS20-44, S220, S327, S335,

S437, T330, T435, and T540. (See Figure 4-5.) Bridges are also rated for the AASHTO HS20 truck and lane load. Non-DelDOT owned highway bridges are rated in the same way.

4.6.1 LOAD DISTRIBUTION

Live load distribution shall be as per AASHTO's *Guide Specification for Distribution of Load or Standard Specifications for Highway Bridges*.

In some cases load distribution may be modified based on the results of load testing. See Section 4.2.3.

4.7 LOAD RATING EXAMPLE

Illustrative load rating examples are given in AASHTO's *Manual for Condition Evaluation of Bridges* and in BRASS. The Manual illustrates hand methods of analysis using allowable stress and load factor methods. BRASS gives computer versions of the same. A BRASS data set is shown in Figure 4-4.

4.8 LOAD RATING REPORT

When ratings are performed in conjunction with the preparation of a replacement or rehabilitation project that alters the load ratings of a bridge, a Load Rating Report shall be submitted to the Bridge Management Engineer. The Load Rating Report shall include the following:

- material properties (assumed and/or measured);
- loading assumptions;
- plans or sketches showing all properties and assumptions;
- printout of BRASS data file(s) (where appropriate);
- documentation of structural model used in analysis, if other than BRASS (where appropriate);
- Inventory, Operating, and Posting summary for HS20 and all legal loads;
- electronic copies of data file(s).

The Load Rating Report shall be submitted as soon as possible after Final Construction Plans are complete.

Chapter Five

Superstructure Design

5.1 INTRODUCTION

This chapter addresses superstructure design for construction of new structures. For superstructure design on rehabilitation and restoration projects, see Chapter Nine.

5.2 DESIGN CRITERIA

5.2.1 BRIDGE AND APPROACH GEOMETRY

5.2.1.1 Design Standards

For roadway approach geometric design, follow the geometric standards in the Department's *Road Design Manual*. Where additional information is needed, refer to AASHTO's *Green Book*.

For bridge design, follow the procedures in the *AASHTO Specifications* and this manual. Refer to Chapter Four of this manual for rating and evaluation procedures.

5.2.1.2 Length

The length of the bridge will be decided at the type, size and location (TS&L) stage of plan development, or at the preliminary plan stage when TS&L plans are not required. The length of a bridge is measured along the centerline of the roadway from the back of the abutment to the back of abutment. Generally, several alternates are developed considering various materials. Cost comparisons are performed to identify the most economical alternative. As outlined in Chapter Two, life cycle cost is one criterion used in developing an evaluation matrix.

Considerations in determining the lengths of bridges over roadways include:

- roadway, shoulder, and median widths,
- future widening of roadways under or over the structure,
- section openness and visibility,
- span length uniformity and continuous span requirements,
- economics,
- safety,
- aesthetics, and
- drainage.

The structure must be long enough to allow for full-width shoulders on the existing roadway being crossed. As a minimum, the Department policy is to continue the same shoulder width through the structure as on the existing roadway. The designer must verify that all clearances and bridge widths result in a structure that is not functionally obsolete.

The length of structures over water will be determined from the hydraulic analysis and environmental considerations. Refer to Chapter Three.

5.2.1.3 Width

The bridge width includes the roadway, shoulders and offset for the barrier rail. The roadway and shoulders should match the existing approach roadway width design standards. Follow the design standards and controls in Chapters Two and Three of the *Road Design Manual*. These design criteria include levels of service, roadway classification, design speed, traffic volumes, traffic composition, and traffic projections.

The designer should consider the need for future widening. The impact on traffic and construction operations at the time the structure will be widened must also be considered.

The longitudinal joint in the deck should not be in a wheel path after the deck is widened.

Outside shoulder widths may be narrowed on long bridges to reduce costs. A long bridge is defined as one longer than 200 feet [60 m]; see Chapter 4 of the *Green Book* for the criteria. Narrowing or eliminating shoulders below AASHTO standards requires a design exception approved by the Chief Engineer.

For the offset between the outside edge of the shoulder and the face of the barrier, two feet [0.6 m] should be allowed. This distance may be modified with a design exception.

5.2.1.4 Skew

Skew is defined as the acute angle subtended by a line perpendicular to the longitudinal axis of the structure and the centerline of bearings. The designer should minimize the skew angle of the substructure and the superstructure for simplicity of design and construction. Reducing the skew also improves overall performance of the structure. To minimize skew, longer spans or the use of a curved girder design may be considered where applicable.

The designer must perform a more accurate analysis, such as finite element, for highly skewed bridges (those with skews of 60 degrees or greater).

5.2.1.5 Clearances

5.2.1.5.1 Vertical Clearance

Vertical clearance is checked by determining the lowest vertical distance between points on the roadway and the corresponding points on the bridge superstructure within the traveled way.

The minimum vertical clearance for roads over Interstate, U.S. and Delaware routes is 16'-6" [5 m]. The minimum clearance over local roads is 14'-6" [4.4 m]. Pedestrian bridges and overhead sign bridges must have 17'-6" [5.3 m] clearance for all roads. These clearances include 6 inches [150 mm] for future resurfacing.

When determining the minimum clearance, the future widening must be considered.

5.2.1.5.2 Horizontal Clearance and Clear Zone

See Chapter Three of the *Road Design Manual* for discussion on horizontal clearance and clear zone for roadways and bridge approaches. Desired clear zone widths cannot normally be attained for roadways under bridges at reasonable costs. Where the desired clear zone cannot be attained, protection such as guardrails or rigid barriers is provided.

5.2.1.5.3 Railroad Clearance

The minimum clearances for railroads must be mutually established between the Department and each railroad and meet applicable State laws or regulations. Anticipated future tracks and track adjustments should be considered in establishing the clearances. Sight distances to railroad signals should not be reduced by construction of the new bridge. The construction requirements, including such items as forms and protection shields, must be considered in meeting the temporary clearance criteria. Railroad tracks must be protected from damage and debris during demolition, construction, and deck replacement. A protection shield must be erected over the track to catch debris. Shields are designed to meet case-by-case needs. Temporary construction clearances may be less than standard clearance requirements, if approved by the railroad.

The minimum vertical clearance above the top of the highest rail is 23'-0" [7.01 m]. Consider the profile grade of the rail and the configuration of the bridge to check the minimum clearance. In areas where a railroad has been electrified with a catenary wire, and areas likely to be electrified, the minimum vertical clearance must be 24'-6" [7.47 m] above the highest rail.

The minimum horizontal clearance measured from the centerline of track to the near face of the obstruction must be 20'-0" [6.1 m] for tangent track and 21'-0" [6.4 m] for curves. On curved tracks, horizontal clearances should be increased 1.5 inches [38 mm] per degree of curvature. When the track is superelevated, clearances on the inside of the curve must be increased by 3.5 inches [88 mm] per 1 inch [25 mm] of superelevation. The desired horizontal clearance is 25'-0" [7.62 m]. All piers less than 25'-0" [7.62 m] from the centerline of the track require a crash wall designed in accordance with the American Railway Engineering and Maintenance-of-Way Association (AREMA) *Manual for Railway Engineering*. Refer to Figure 5-1 for crash wall details.

The designer must consider the railroad's drainage and utility system in determining horizontal clearances. Piers and end slopes shall be located such that they do not interfere with railroad drainage ditches.

See Figure 5-2 for requirements.

Figure 5-1
Crashwall Details

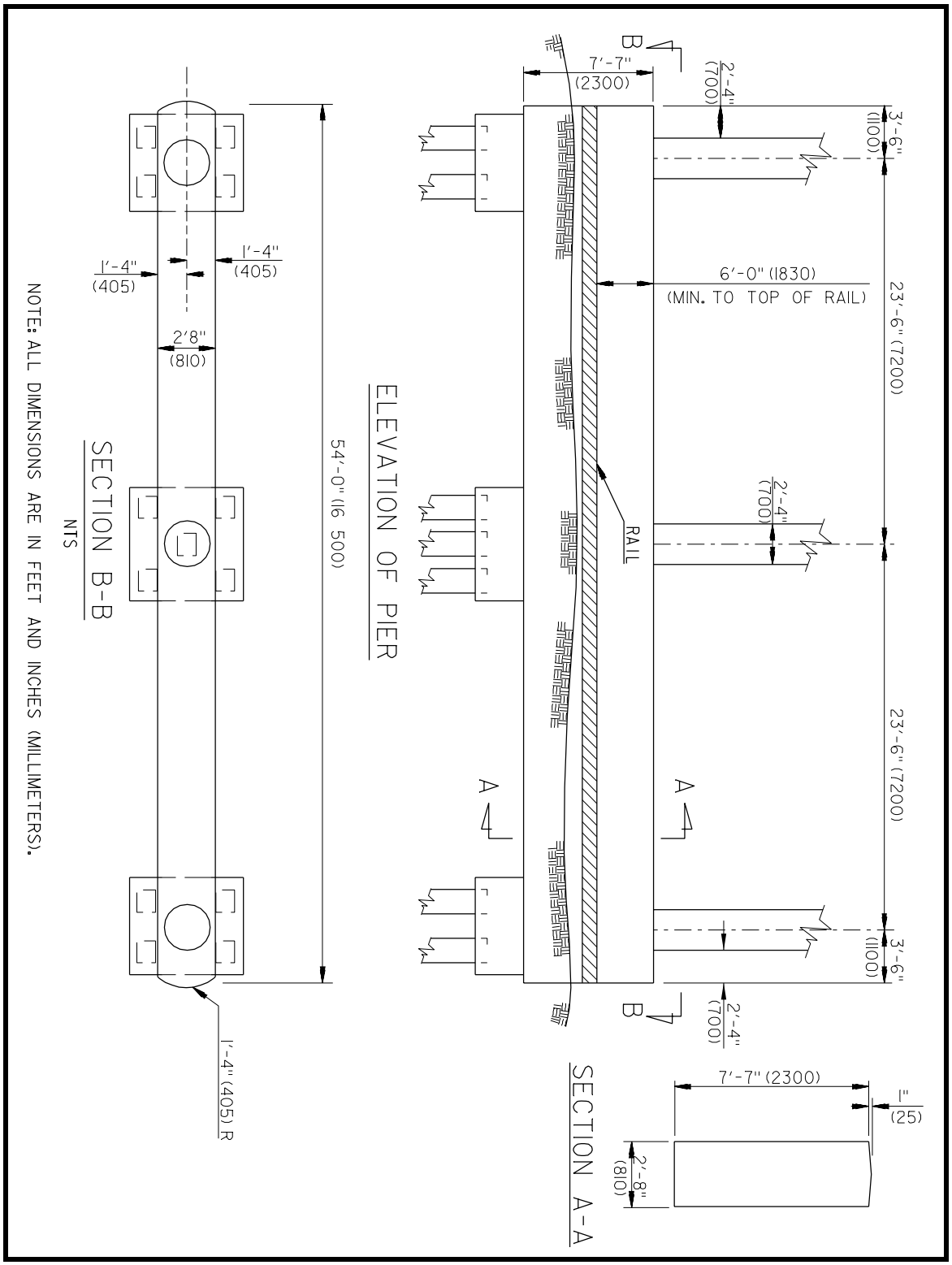

Figure 5-2
Railroad Clearances

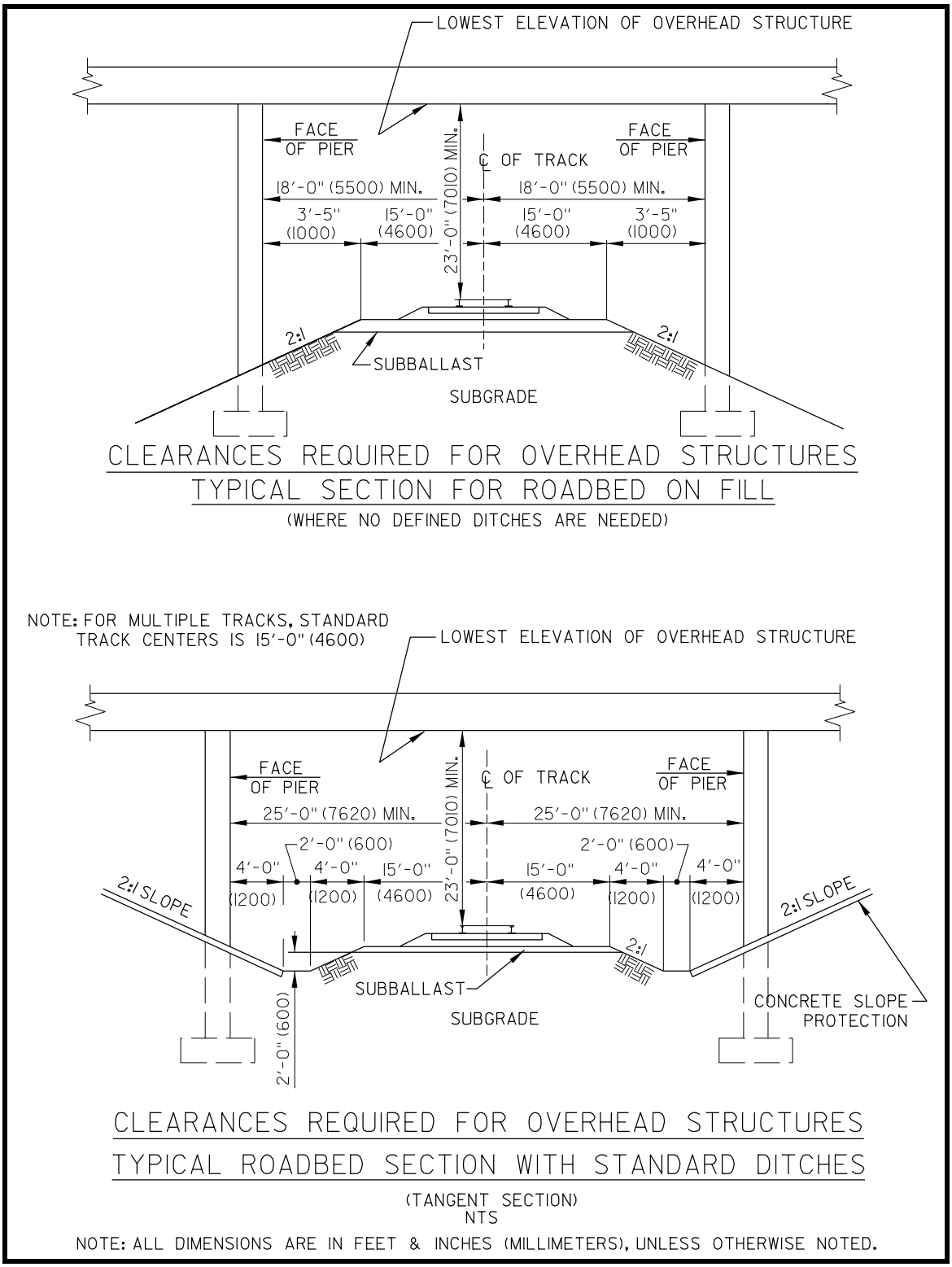

5.2.2 STRUCTURAL ANALYSIS

5.2.2.1 AASHTO Method

The Department follows the approximate methods given in Section 4, Structural Analysis and Evaluation, of the *AASHTO Specifications*.

5.2.2.2 Refined Method

On a case-by-case basis, the designer may use another method, such as the finite element analysis method for highly skewed bridges or complex structures, to refine the load distribution. The approval of the Bridge Design Engineer is required.

5.2.3 DESIGN LOADS

5.2.3.1 Live Loads and Lane Loads

Live loads and lane loads used for design shall comply with the AASHTO loads as defined in Chapter Two of this manual. Application of live loads, including vehicles and pedestrians, will be in accordance with the *AASHTO Specifications*.

5.2.3.2 Dead Loads

The Department follows the *AASHTO Specifications* for dead loads. Dead loads consist of the weight of the entire superstructure including beams, deck, sidewalks, tracks, parapets, pipes, conduits, cables and other public utility services. Unless future additional utilities are anticipated, they will not be considered. The design must include an allowance for an additional future 2 inch [50 mm] overlay and an additional 0.5 inch [13 mm] integral wearing surface. When a design includes stay-in-place deck forms, their weight must be included as part of the dead load. Use the following loads:

- Future overlay: 25 psf [1.2 kN/m^2]
- Stay-in-place forms (including concrete-in-form corrugations): 15 psf [0.7 kN/m^2]
- Reinforced concrete: 150 pcf [23.6 kN/m^3]
- Lightweight concrete: 110 to 130 pcf [17.3 to 20.4 kN/m^3]
- Structural steel: 490 pcf [77.0 kN/m^3]
- Fill soil: 120 pcf [18.8 kN/m^3]
- Water: 62.4 pcf [9.8 kN/m^3]
- Timber: Softwood 50 pcf [7.9 kN/m^3]; Hardwood 60 pcf [9.5 kN/m^3]
- Asphalt: 140 pcf [22.0 kN/m^3]
- Stone masonry: 170 pcf [26.7 kN/m^3]
- Brick: 140 pcf [22.0 kN/m^3]

5.2.3.3 Dynamic Load Allowance

For dynamic load allowance, refer to Section 3.6.2, Dynamic Load Allowance: IM, *AASHTO Specifications*.

5.2.3.4 Combinations of Loads

See Section 3.4, Load Factors and Combinations, *AASHTO Specifications.*

5.2.4 DESIGN METHODS

The Department uses the load and resistance factor method of design as defined in the *AASHTO Specifications.*

5.2.5 TEMPERATURE RANGE

Bridge designs must allow for movements due to temperature. Both steel and concrete structures expand and contract because of temperature changes, but the rate of change for massive concrete members or structures is slower than for steel. Use a temperature range of 0 to 120 ºF [-18 to +49 ºC] for steel bridges, and 10 to 80 ºF [-12 to +27 ºC] for concrete bridges. Refer to Section 3.12, Force Effects due to Superimposed

Deformations: TU, TG, SH, CR, SE, in the *AASHTO Specifications*.

5.2.6 DEFLECTIONS

The Department adopts the deflection criteria given in Section 2.5.2.6.2, Criteria for Deflection, *AASHTO Specifications*.

5.3 CONCRETE BRIDGE DECKS

This section applies to the design of bridge decks supported by steel, concrete or timber beams.

5.3.1 DESIGN OF CAST-IN-PLACE DECKS

5.3.1.1 Materials

Class D portland cement concrete (f'_c = 4,500 psi [30 MPa] at 28 days) is used for concrete decks.

Reinforcing steel meeting the requirements for AASHTO M31, Grade 60 [M31M, Grade 420], shall be specified.

All reinforcing steel shall be protected with fusion-bonded epoxy. Epoxy coating conforming to AASHTO M284 [M284M] shall be specified.

5.3.1.2 Design

In applying wheel loads when designing the deck, refer to Section 4.6.2.1, Decks, in the *AASHTO Specifications*. For design, refer to Section 9, Decks and Deck Systems.

The design of the overhang shall also conform to Section 4.6.2.1, Decks, in the *AASHTO Specifications* and meet the following criteria:

- normal overhang is 2'-6" [0.75 m], and
- maximum overhang is half the beam spacing or 4'-0" [1.2 m], whichever is less.

The designer must check the constructibility of the overhang.

5.3.1.3 Thickness

The minimum thickness of concrete decks is 8 in [210 mm]. The maximum is 10 in [250 mm]. In general, the thickness is measured above the top of the stay-in-place forms. The total thickness includes 0.5 in [15 mm] for an integral wearing surface. Therefore the minimum design thickness is 7.5 in [190 mm]. The wearing surface is not considered a part of the design thickness.

Where corrugated metal stay-in-place forms are used, the thickness is measured to the top of the corrugation as shown in Figure 5-3.

5.3.1.4 Concrete Cover

The minimum cover over reinforcing bars is:

- top mat - 2.5 in [65 mm], which includes the 0.5 in [15 mm] integral wearing surface, and
- bottom mat – When stay-in-place forms are used, the minimum cover shall be 1 in [25 mm]; otherwise it shall be 2 in [50 mm], unless approved by the Bridge Design Engineer.

Figure 5-3
Stay-in-Place Form Details

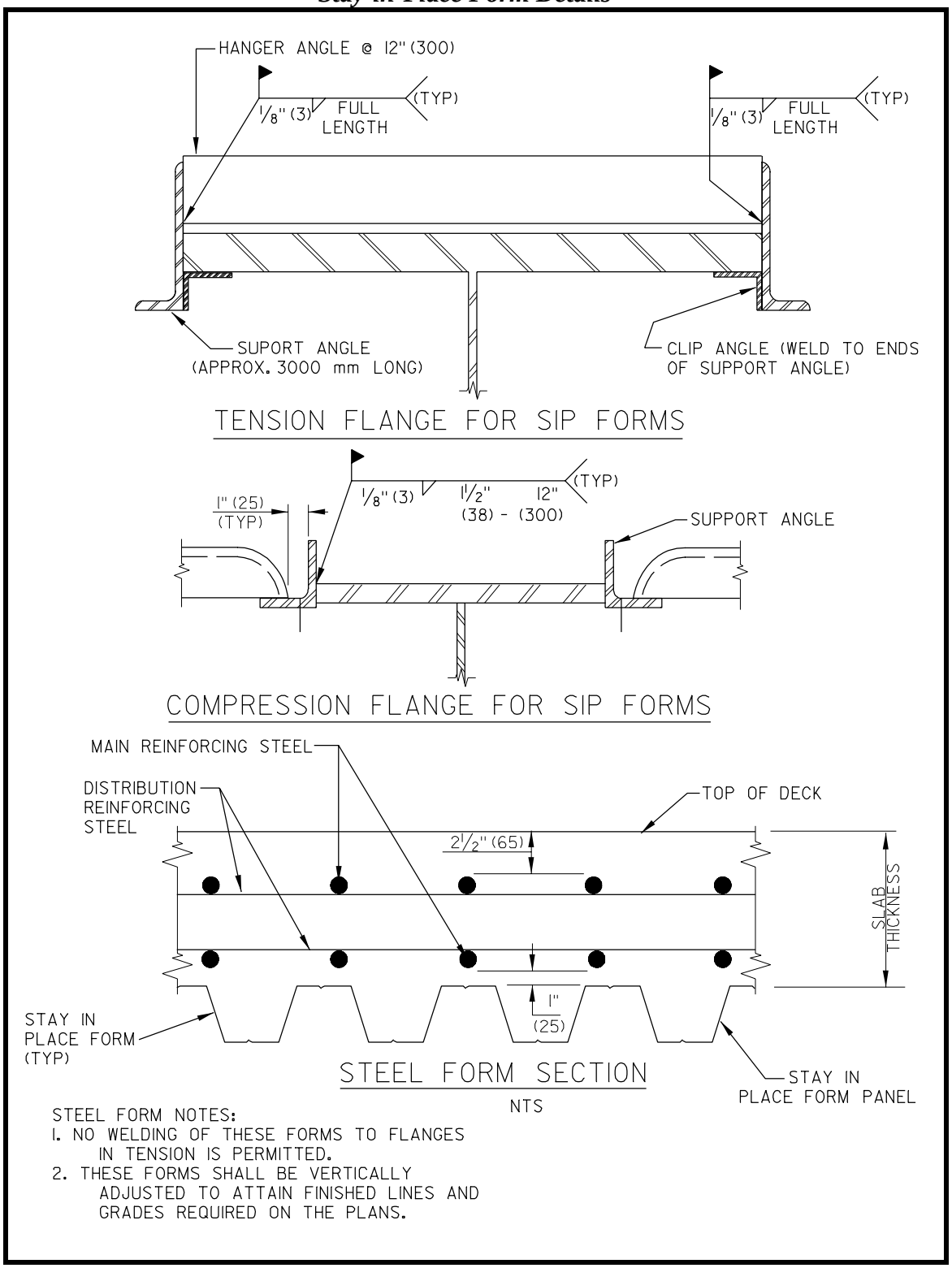

5.3.1.5 Reinforcement

The minimum size of reinforcing bar is #5 [16]. Because of transportation problems, the longest reinforcing bars used in Delaware are 60 feet [18.3 m]. Specify long bars, insofar as possible, to minimize splicing. Refer to Section 5.11.5, Splices of Bar Reinforcement, *AASHTO Specifications,* for splicing requirements. Normally, reinforcing steel splices are lapped, but the designer may specify mechanical splices. Where mechanical splices are not included on the plans, they may be approved by the Department if requested by the contractor. Welded splices are not permitted.

5.3.1.6 Stay-in-Place Forms

Stay-in-place (SIP) forms must conform with the requirements for permanent steel bridge deck forms in Section 602 of the *Standard Specifications*. See Figure 5-3 for details. Welding forms to structural components is not permitted in tension zones. SIP forms are preferred by DelDOT. If they should not be used, then it should be noted on the plans.

5.3.1.7 Pouring Decks

The superstructure design should be evaluated to determine the need for a pouring sequence. The designer should consider the effect of the plastic concrete on the girders in evaluating the need for a pouring sequence. The designer must consider beam or girder deflection in developing the pouring sequence. Refer to Section 602 of the *Standard Specifications* for the construction method. Normally, deck concrete placement begins at the low point on the deck and proceeds up grade. Where the deck grade is minor, this requirement may be waived. Bridge deck pouring sequences must be submitted for review and shown on the plans, as appropriate. The number of pours should be minimized for ease and speed of construction.

The bridge designer is expected to attend the "pre-pour" conference with the contractor and other representatives of the Department. Refer to Chapter Thirteen for additional details. The contractor may be permitted to pour the deck continuously with approval of the Bridge Design Engineer. Any deviation from the pouring sequence should be reviewed and approved by the designer.

5.3.2 DESIGN OF PRECAST SLABS AND DECK PANELS

This section applies to the design of precast and precast-prestressed deck slabs and deck panels supported by steel or concrete beams.

Precast deck slabs are cast full thickness in segments for placement on the beams. They may be conventionally reinforced or prestressed. A concrete wearing surface shall be placed to improve the ride.

Alternatively, precast deck panels are cast partial thickness and are placed to act as stay-in-place forms. The remainder of the deck is cast-in-place to form a full thickness composite deck. They may be conventionally reinforced or prestressed.

If deck slabs and deck panels are prestressed, typically the prestressing will be in the transverse direction. Deck slabs and panels may be longitudinally post-tensioned prior to pouring the deck or wearing surface. Hot-mix asphalt overlays are only permitted for temporary applications on precast slabs or deck panels. Precast slabs and deck panels may be utilized on a case-by-case basis. The

advantages of precast slabs and deck panels include:

- expediting construction; and
- reducing traffic delays and inconvenience to the traveling public.

These advantages must be evaluated against the disadvantages that include:

- the cost of precast concrete is higher than for CIP concrete;
- increased potential for cracking of the deck at slab and panel joints; and
- design details are more critical to fabrication and construction.

Proper support of deck panels on the beams is critical to avoid deck cracking. Proper tolerance should be enforced at the shop to minimize the gap at the joints.

5.3.2.1 Materials

Class D portland cement concrete (f'_c = 4,500 psi [30 MPa] at 28 days) is used for non-prestressed deck slabs. The strength of concrete needed to meet the design requirements should be specified for prestressed deck slabs and deck panels. If the design strength is higher than 4,500 psi [30 MPa], a special mix design is required.

Reinforcing steel meeting the requirements for AASHTO M31, Grade 60 [M31M, Grade 420], shall be specified. The minimum size of reinforcing is a #5 [16] bar.

All reinforcing steel shall be protected with fusion-bonded epoxy. Epoxy coating conforming to AASHTO M284 [M284M] shall be specified.

Prestressing strands shall be a low relaxation strength specified by the designer.

5.3.2.2 Design

In applying the wheel loads when designing the slab, refer to Section 4.6.2.1, Decks, *AASHTO Specifications*. The designer must consider:

- application of live loads to the precast slab or deck panel as required for maintenance of traffic;
- construction requirements for handling and placing the slabs and panels;
- provisions for bonding the wearing surface to the slabs or panels;
- composite action between the precast panel and CIP reinforced concrete.

Refer to Section 5, Concrete Structures, and Section 9, Decks and Deck Systems, in the *AASHTO Specifications* for design of precast slabs and deck panels.

The design of the overhang shall also conform with Section 4.6.2.1, Decks, in the *AASHTO Specifications* and meet the following criteria:

- normal overhang is 2'-6" [0.75 m], and
- maximum overhang is half the beam spacing.

Figure 5-4 shows a typical overhang for a precast, prestressed deck panel.

Precast deck slabs and deck panels must be connected to the beams. Figure 5-5 shows typical connections for precast deck panels.

5.3.2.3 Thickness

The minimum thickness, with the overlay, for precast slabs is 8 inches [210 mm] and the maximum is 10 inches [250 mm]. A concrete overlay shall be applied to precast slabs to provide a wearing surface and improve the ride. Hot-mix asphalt overlays are only permitted for temporary applications. The minimum overlay thickness is 1.5 in [40 mm]. See Figure 5-6.

The minimum total thickness of the deck, including precast deck panels, cast-in-place composite deck, and integral wearing surface, is 8 inches [210 mm] and the maximum is 10 inches [250 mm]. The minimum thickness of the integral wearing surface is 0.5 inches [15 mm]. See Figure 5-7.

The wearing surface on precast slabs and precast panel decks is not considered a part of the design thickness for strength or resistance purposes.

Figure 5-4
Typical Precast Deck Slab

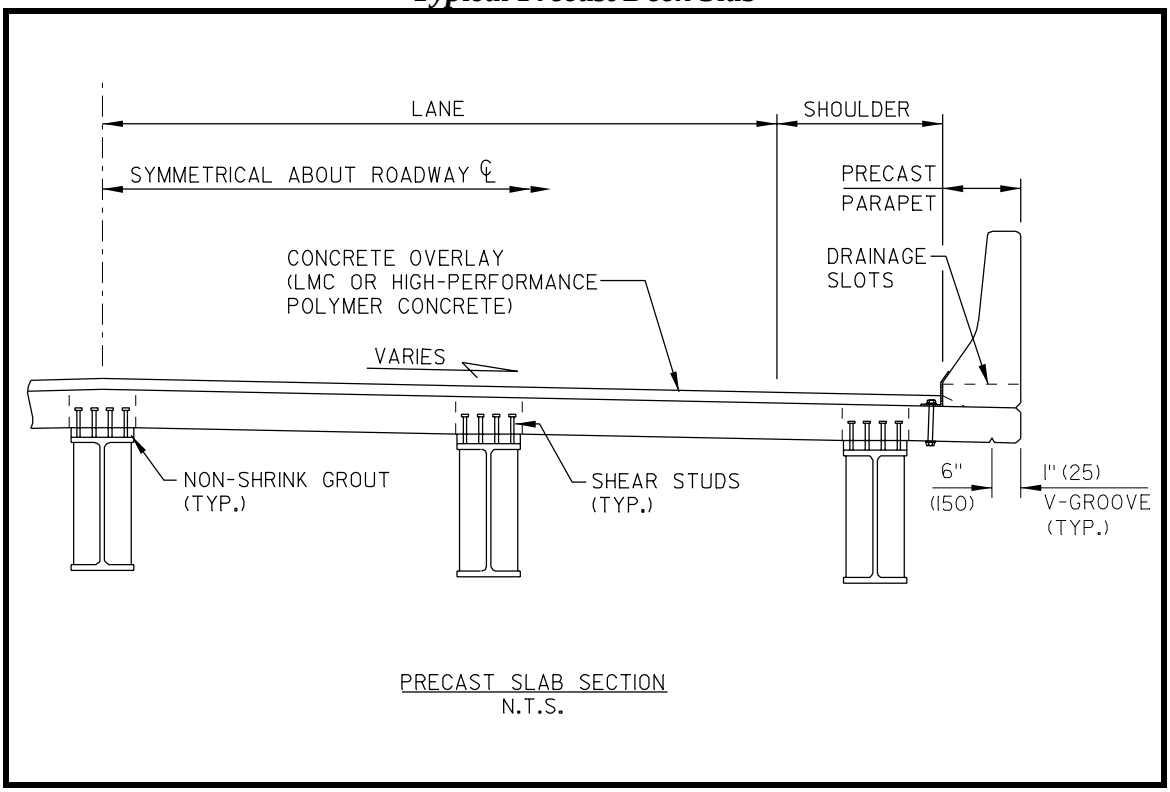

Figure 5-5
Typical Precast Panel to Beam Connections

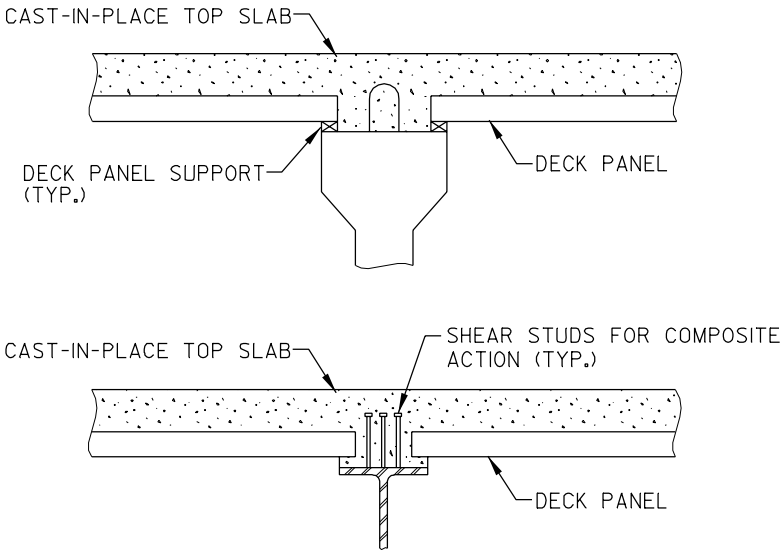

NOTE: FOR CLARITY, REINFORCEMENT BARS ARE NOT SHOWN.

Figure 5-6
Dimensions of Precast Deck Slab

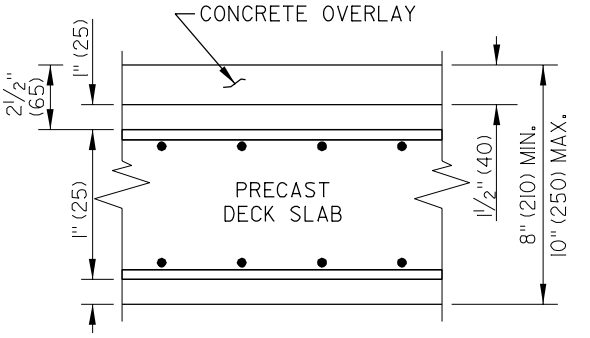

NOTE: ALL DIMENSIONS ARE IN INCHES (MILLIMETERS).

Figure 5-7
Dimensions of Precast Deck Panels

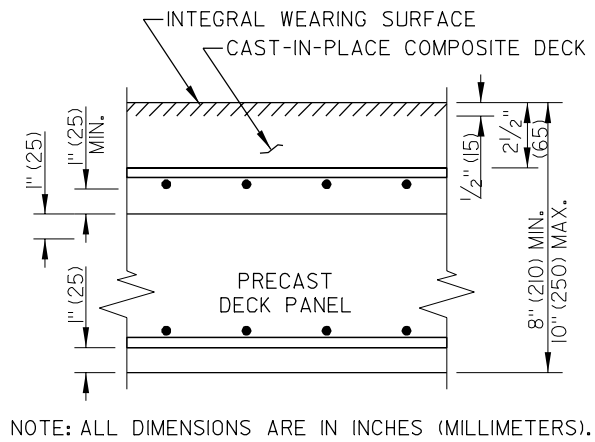

5.3.2.4 Concrete Cover

The minimum allowable cover over reinforcing bars in the precast slab or panel is:

- top mat—2.5 inches [65 mm] for precast slabs and 1 inch [25 mm] for precast panels with concrete overlay; and
- bottom mat—1 inch [25 mm] for either.

5.3.2.5 Reinforcement Splices

Splicing reinforcing bars will not be permitted in precast slabs or panels.

5.3.2.6 CIP Concrete

The superstructure design should be evaluated to determine the need for a pouring sequence. For details, see Secion 5.3.1.7.

5.3.3 DESIGN OF COMPOSITE ACTION DECKS

Composite action decks are designed such that both the deck and beam or girder respond to live loads and superimposed dead loads as a unit. Superimposed dead loads include all dead loads placed on the deck after it is cured. For steel beams, the interconnection is accomplished using studs attached to the top flange of the beam or girder. See Section 5.3.3.6. For concrete beams, the interconnection is accomplished using steel reinforcing bars embedded in the beam or girder and extending into the deck. See Section 5.4.3.3. The Department recommends the use of composite action when possible.

Refer to Section 9, Decks and Deck Systems, in the *AASHTO Specifications* for design parameters.

5.3.4 FINISHED DECK ELEVATIONS

The designer must include the framing plan and camber diagram for each span, as line drawings, in the plans. Finished deck elevations are shown in the plans, at the centerline of bearing over each abutment and pier line, and at 1/10th points or at 10 foot [3 m] intervals, whichever is less, the same as for camber diagrams:

- longitudinally over each beam;
- longitudinally along the span at the break points in the cross slope of the deck; and
- longitudinally at the face of the parapet.

Refer to Section 5.3.4 for camber diagrams for steel beams and Section 5.4.3.7 for concrete beams.

5.3.5 JOINTS

Joints are constructed in decks to accommodate movement (rotation, deflection of the span, expansion and contraction). All joints must be sealed or constructed with troughs to prevent leakage of water onto the bearings and substructure.

Obtaining a watertight bridge joint is a difficult objective over the life of a bridge. Therefore, the design should incorporate the fewest number of joints that will provide for the necessary expansion and contraction. Jointless bridges should be designed whenever practical.

Figure 5-8
Joint at Fixed Bearing

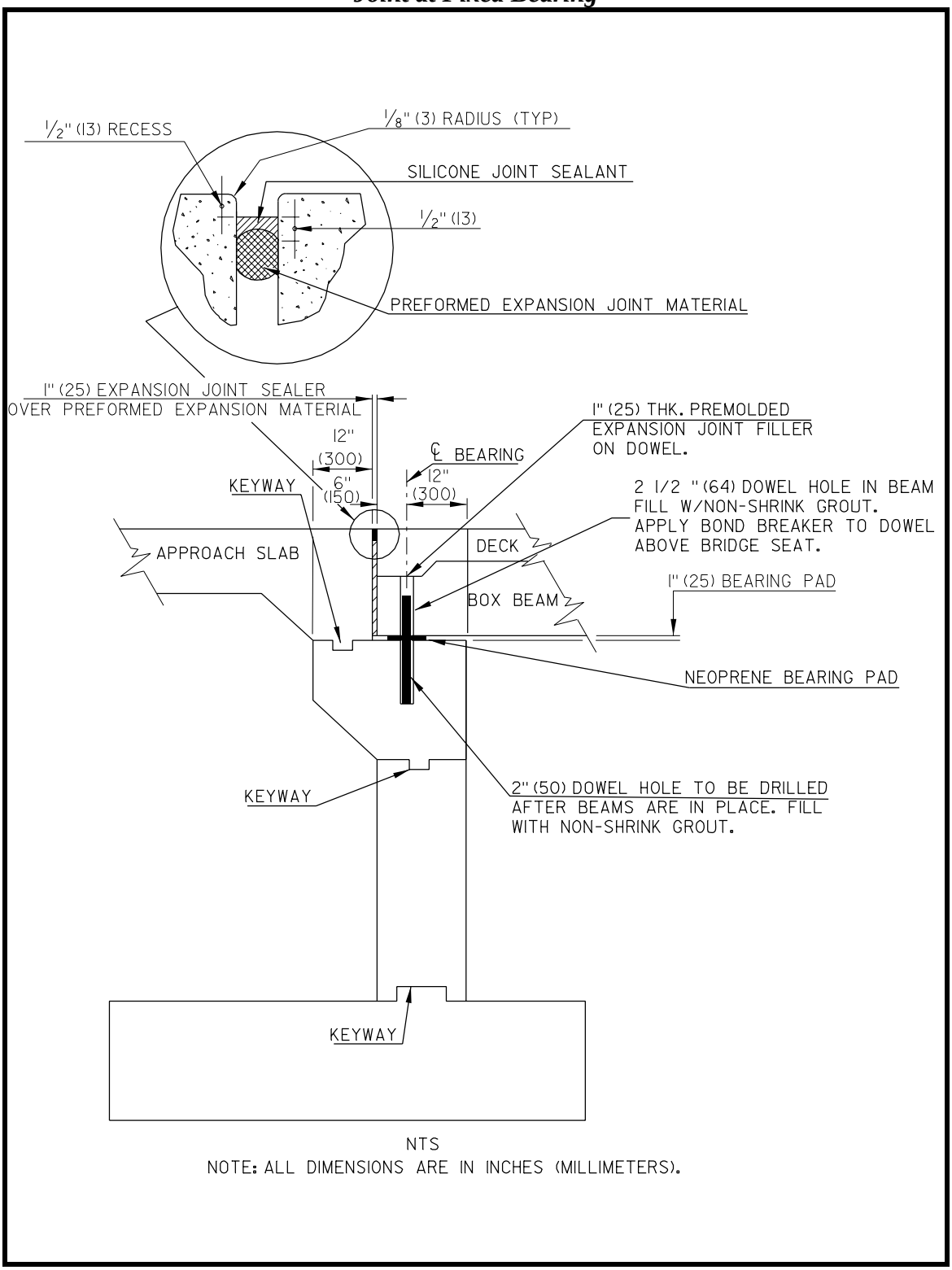

NTS
NOTE: ALL DIMENSIONS ARE IN INCHES (MILLIMETERS).

5.3.5.1 Transverse Joints

Joints at fixed bearings are designed to accommodate movements of the span due to rotation of the bearing caused by loading. Typical joints at fixed bearings include silicone joints and compression seals.

Joints at expansion bearings are designed to accommodate expansion and contraction movements of the span caused by temperature changes and loading. For new construction, the two types of joints used by the Department at expansion bearings are:

- strip seals, and
- finger joints.

5.3.5.1.1 Strip Seals

Strip seals are used for new construction. In selecting strip seals, the designer must consider the relationship between total movement, minimum and maximum joint widths, and installation temperature. The application of strip seals is limited to 4 in [100 mm] of movement. Prior to specifying strip seals, the designer should confirm their availability. Strip seals less than 3 in [75 mm] should not be specified due to lack of availability and future maintenance considerations. The seal size must be adjusted to accommodate joint movement as affected by bridge skew. Because of rotation, expansion of skewed bridges may not be in a straight line. Figure 5-9 shows the details and sample design calculations for transverse strip seal joints.

5.3.5.1.2 Finger Joints

Finger joints are used where movements in excess of 4 in [100 mm] must be accommodated. A finger joint is an expansion joint with the opening spanned by meshing steel plates formed as fingers or teeth. Finger joints are open so a trough must be installed to control runoff through the joint. The gradient of the trough must be as steep as the location will permit to ensure drainage and flushing. Refer to Figure 5-10 for details.

5.3.5.2 Longitudinal Joints

Longitudinal joints in bridge decks may be required for very wide bridges, widened bridges or staged construction bridges. (A wide bridge is defined as being over 90 feet [27 m] wide or having a span to width ratio less than one, i.e. the width is greater than the span.) Longitudinal joints are always placed between beams or girders. Place them in the median or next to the median, if possible. Avoid placing longitudinal joints in the traveled way because of the hazard to motorcycles. Compression seals are not used for longitudinal joints. The designer must determine the amount of joint movement, both transverse and vertical, when designing longitudinal strip seals. Figure 5-11 shows details for longitudinal strip seals.

5.3.5.3 Construction Joints

Construction joints, either transverse or longitudinal, are permitted only at locations shown on the plans. A construction joint must be used at the break between pours, such as those required by the pouring sequence. Normally, construction joints are keyed, cold joints. See Figure 5-12.

Figure 5-9a
Transverse Strip Seal Joint Details

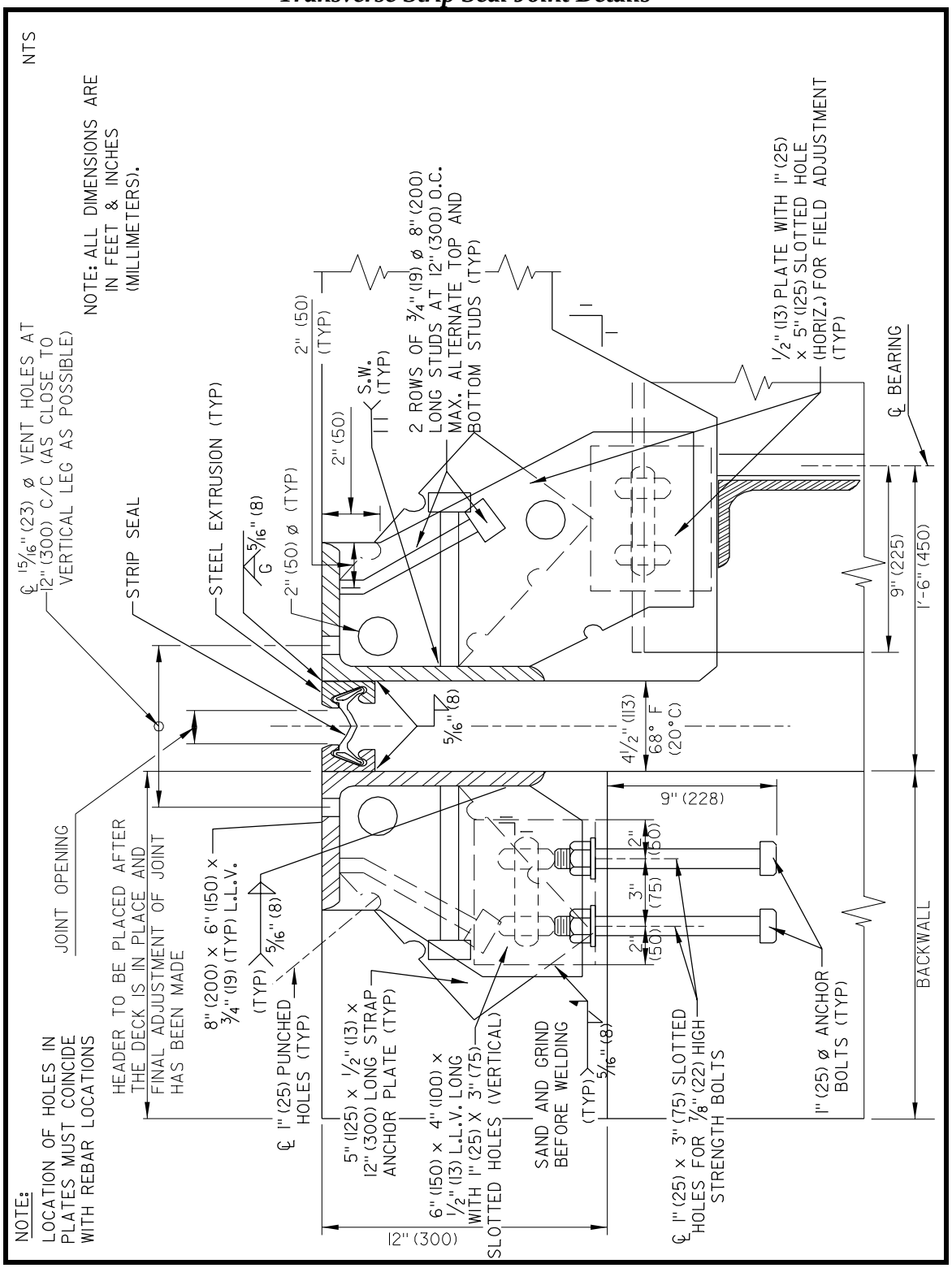

Figure 5-9b
Transverse Strip Seal Joint Details (Metric)

DESIGN VARIABLES

L = Length of structure contributing to movement
ΔL = Change in structure length due to temperature
T = Temperature
ΔT = Change in temperature (Delaware is in the moderate climate zone.)
J = Joint width
α = Coefficient of thermal expansion or contraction of a given material. Use 0.0000117 mm/mm per °C for steel and 0.0000108 mm/mm per °C for concrete.

Example Problem

Given: Steel beam bridge, 60 m, temperature range is -23°C to 43°C (for this example), so ΔT is 66°C. (See Section 5.1.5 for currently used temperature range.)
Find: Joint movement, select seal and complete joint sizing at 20 °C.

$\Delta L = \Delta T\ \alpha L$
ΔL = 66 (0.0000117 x 60 m x 1000 mm/m)
ΔL = 46.33 mm Joint movement rating

Select a seal with movement rating equal to or greater than 46.33 mm.

Find the midpoint of expansion and contraction.

½ ΔT = 33°C
43°C - 33°C = 10°C

Determine the joint opening midpoint from manufacturer's literature.

1/2 Seal movement rating plus 6 mm = 44.10 mm, for this example.

Compute the joint opening at the installation temperature; assume 20°C.

$$\frac{20 - 10}{66} \times 46.33 \text{ mm} = 7 \text{ mm}$$

44.1 - 7 = 37.1 mm

Joint opening at 20°C must be 37.1 mm

Minimum joint opening:

$$\frac{43 - 10}{66} \times 46.33 = 23 \text{ mm}$$

44.1 -23 = 21.1 mm

Maximum joint opening:

$$\frac{10 - (-23)}{66} \times 46.33 = 23 \text{ mm}$$

44.1 + 23 = 67.1 mm

Figure 5-10
Finger Joint Details

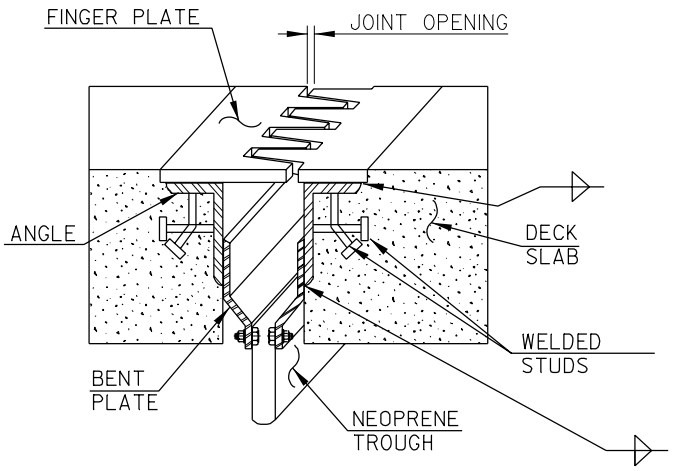

Figure 5-11
Longitudinal Strip Seal Joint Details

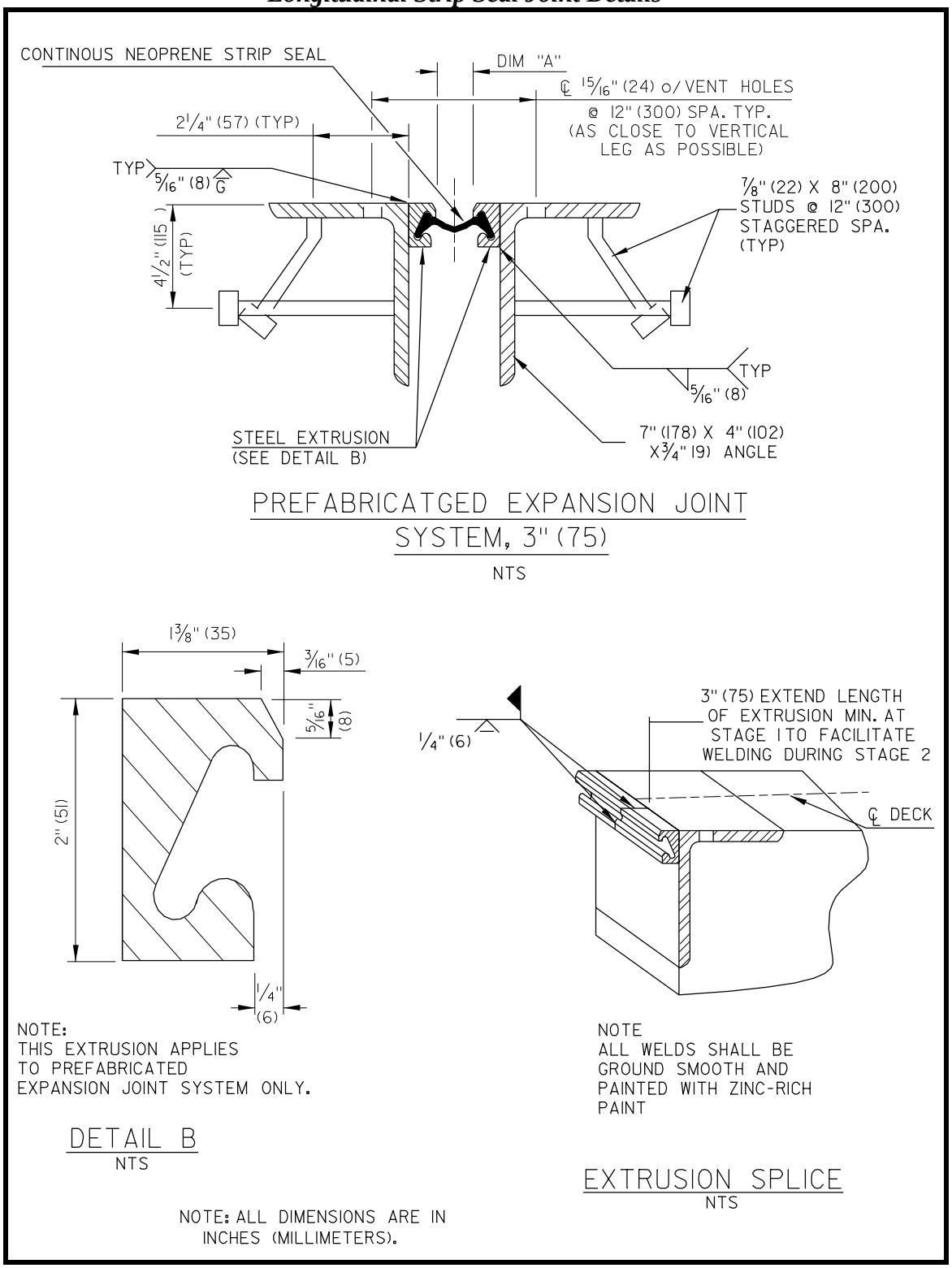

Figure 5-12
Cold Construction Joint Details

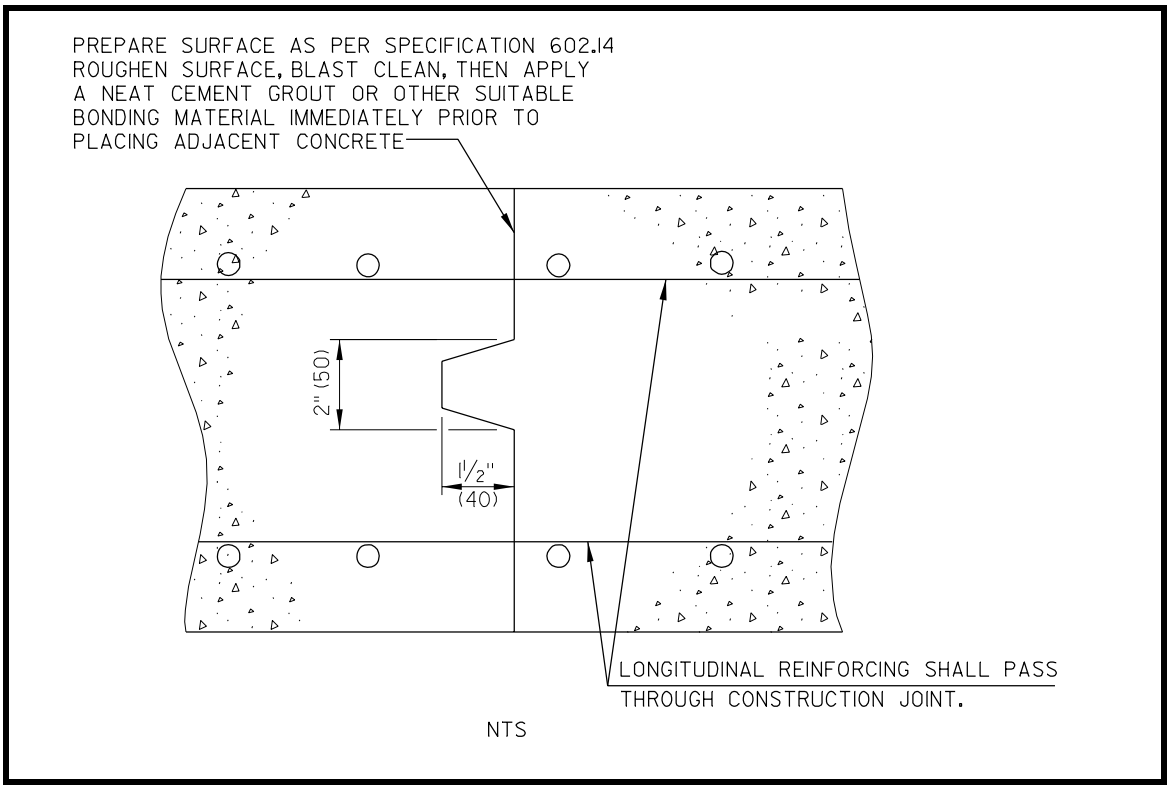

5.3.6 DECK PROTECTIVE SYSTEMS

The Department specifies concrete with low water-cement ratios, epoxy-coated reinforcing steel and extra cover for the top mat of reinforcement to ensure long-lasting decks. Additional deck protection, such as waterproofing and overlays, may be warranted on a case-by-case basis.

5.3.6.1 Overlays

Overlays are generally not constructed on new CIP decks (except for precast panel decks) because the reinforcing steel is protected through the use of additional concrete cover poured monolithically with the deck concrete. Overlays may be latex-modified concrete, silica fume concrete, or others approved by the Department. Overlays may be justified on new decks where replacement of the deck would be very costly, or where traffic would be severely impacted during deck replacement.

5.3.7 MISCELLANEOUS DECK ITEMS

5.3.7.1 Bridge Rails

5.3.7.1.1 Policies

Crash-testing. Every type of barrier used on Delaware bridges must have passed crash tests accepted by the Federal Highway Administration for the appropriate test level. All barriers must meet design criteria in the *AASHTO Specifications* and crash-testing criteria defined in *NCHRP Report 350, Recommended Procedures for Safety Performance Evaluation of Highway*

Features. Consult the current FHWA list of crash-tested details. Refer to NCHRP 350 for information regarding test levels. Traffic barriers include F-shape, vertical barriers, open ornamental barriers and aesthetically treated barriers. Pedestrian and bicycle railings must also comply with the *AASHTO Specifications.*

For high-speed highways (50 mph [80 km/h] or greater), pedestrian and bicycle traffic should have both an outside pedestrian or bicycle railing and an inside barrier railing.

Contraction joints. The maximum spacing for contraction joints in barriers and railings is 12'-0" [3.6 m]. Joints in barriers and railings at deck joints on skewed bridges may require special treatment to prevent damage to the barriers during expansion and contraction. For skews between zero and 15 degrees, the joint in the barrier should be the same as the deck joint. All other barrier joints should be perpendicular to the edge of slab. When the skew is greater than 15 degrees, the joint in the deck under the barrier must also be perpendicular to the edge of the deck.

5.2.7.1.2 Types of Bridge Rails

Two types of solid barriers are used on new concrete-decked bridges: F-shape and vertical face. The F-shape barriers are normally used by the Department for most bridges. Vertical barriers are used in combination with sidewalks or bicycle facilities. Vertical-face barriers may also be used where form liners or stone facings are required for aesthetics. The types of barriers and railings are:

- **F-Shape Barrier** (Figure 5-13) - The F-shape barrier is preferred for use on bridges. The standard height for Delaware's use of these barriers is 2'-8" [810 mm]. This approximates the AASHTO minimum height of 2'-5" [735 mm] plus 3 in [75 mm] for a future overlay. Higher barriers (3'-6" [1070 mm]) on bridges carrying high volumes of truck traffic may be justified with the approval of the Bridge Design Engineer. Higher median barriers may also be justified to reduce headlight glare.
- **Pedestrian Railing with Handrail** (Figure 5-14) - A vertical barrier with a handrail should be used on bridges with sidewalks. The height to the top of the handrail is 3'-6" [1070 mm]. The concrete section is 2'-3" [685 mm] high.
- **Bicycle Railing** - Where bicycle paths must be carried across structures, bicycle railings may be justified. The height of bicycle railings is 4'-6" [1370 mm]. The designer should contact the Bicycle/Pedestrian Coordinator to determine where bicycle paths are located.
- **Open ornamental barriers** (Figure 5-15) - Normally, open barriers are not used. They may be justified for aesthetic reasons for restoration of historic bridges or for bridges in historic areas. Types of crash-tested open face ornamental barriers include the Texas C411 and T411, and the Oklahoma Modified TR-1 Bridge Rail. The example in Figure 5-15 meets Test Level 2 requirements.
- **Barrier with Aesthetic Treatment** (Aesthetic Stone-Faced Barrier without Handrail, Figure 5-16) - Special aesthetic treatment of barriers is not normally specified. Stone or brick facing may be considered.
- **Timber railings** - See Chapter Eight.

See Figure 5-17 for handrail details.

Provisions must be made to accommodate drainage at the barrier. See Section 3.3.6.

Figure 5-13
F-Shape Barrier Details

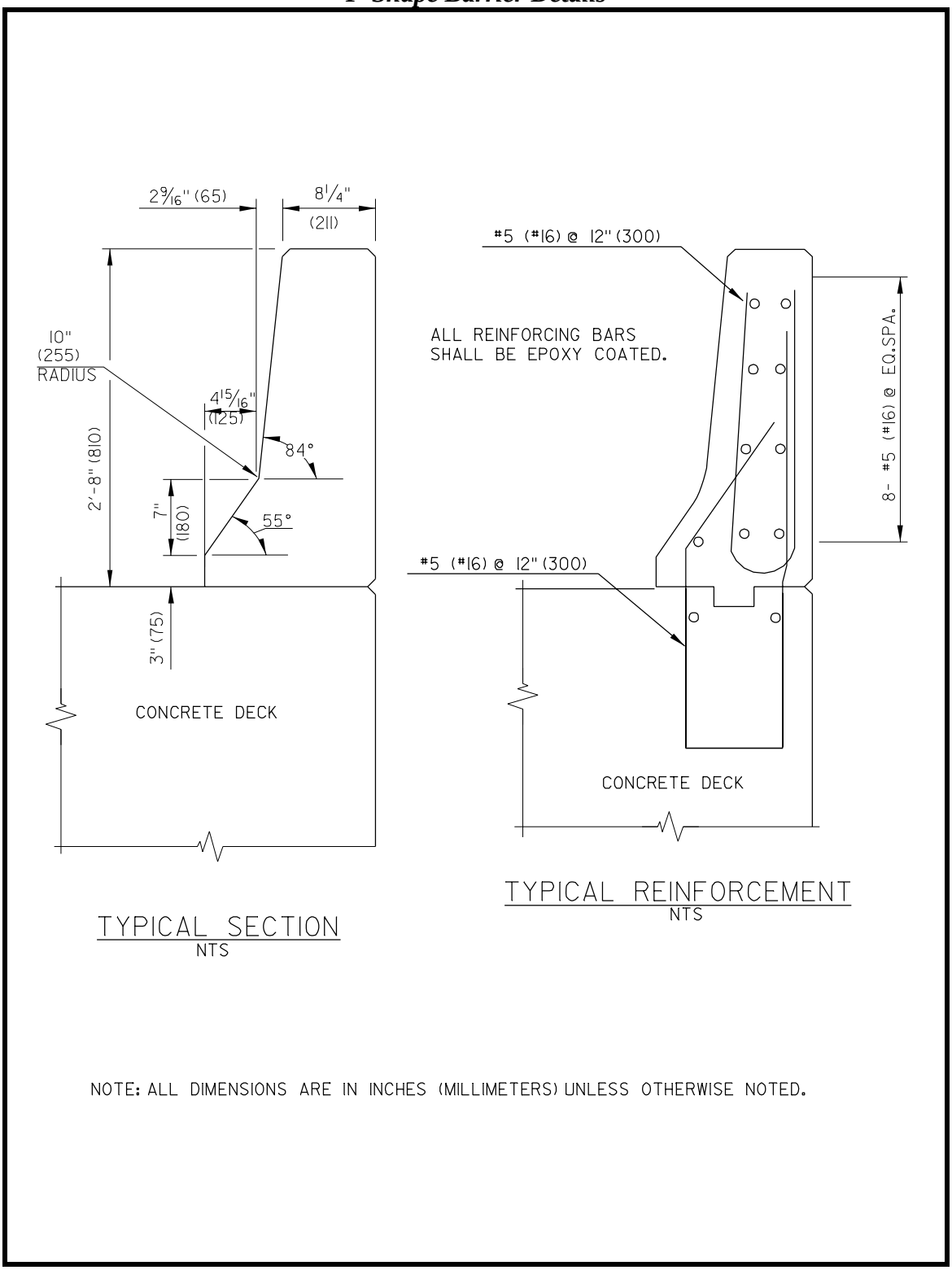

Figure 5-14
Pedestrian Railing with Tube Handrail Details

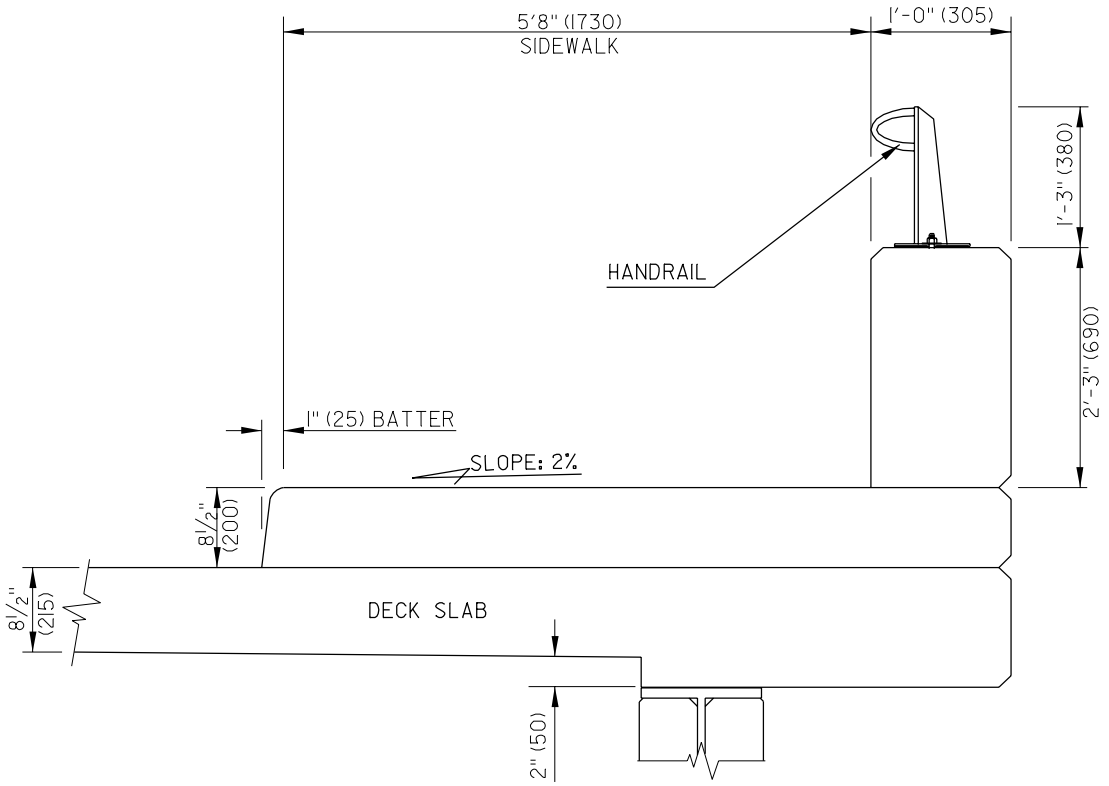

NOTE: ALL DIMENSIONS ARE IN INCHES (MILLIMETERS).
FOR HANDRAIL DETAILS, REFER TO FIGURE 5-18B

Figure 5-15
Open Ornamental Barrier Details

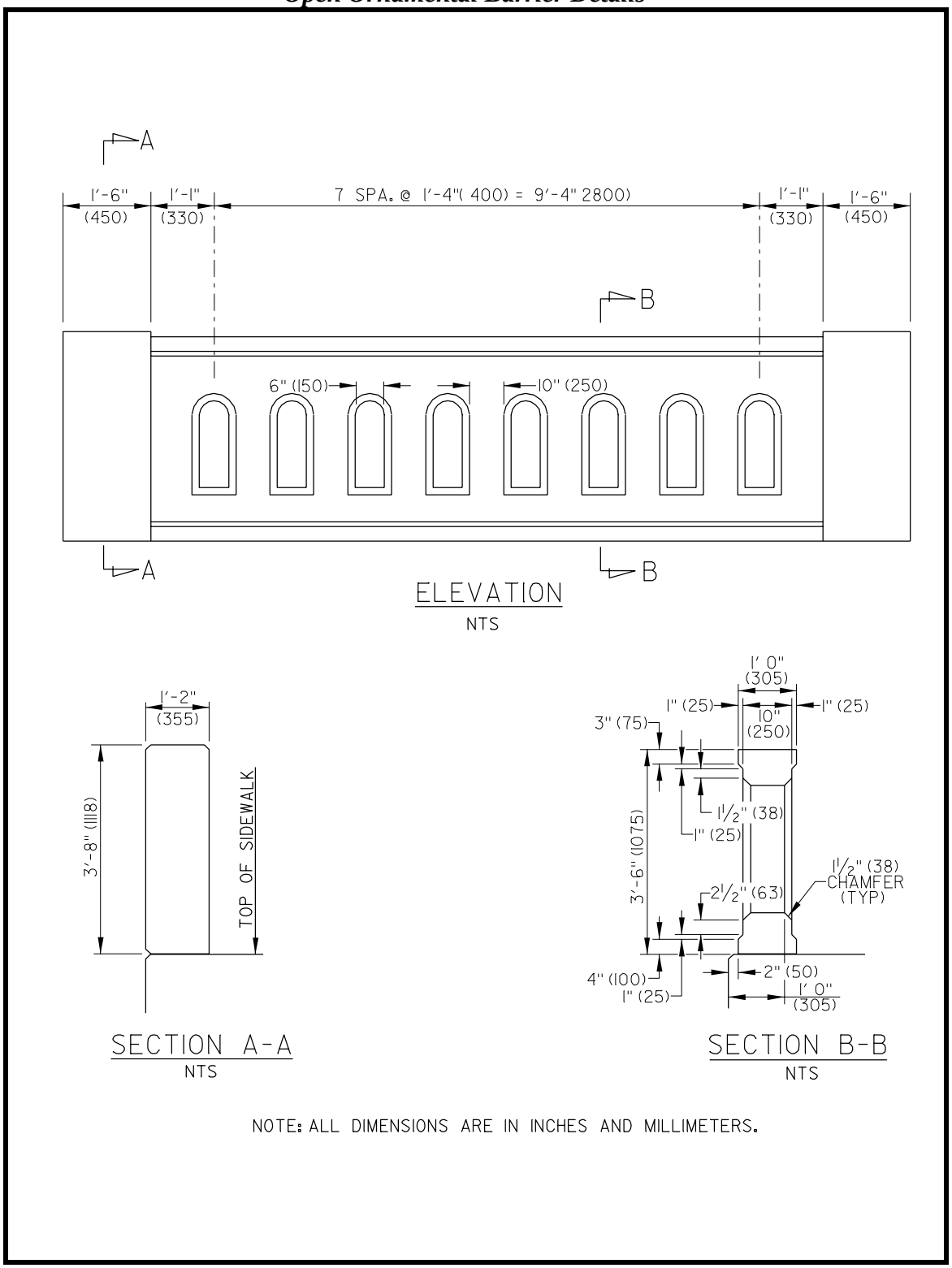

Figure 5-16
Aesthetic Stone-Faced Barrier without Handrail

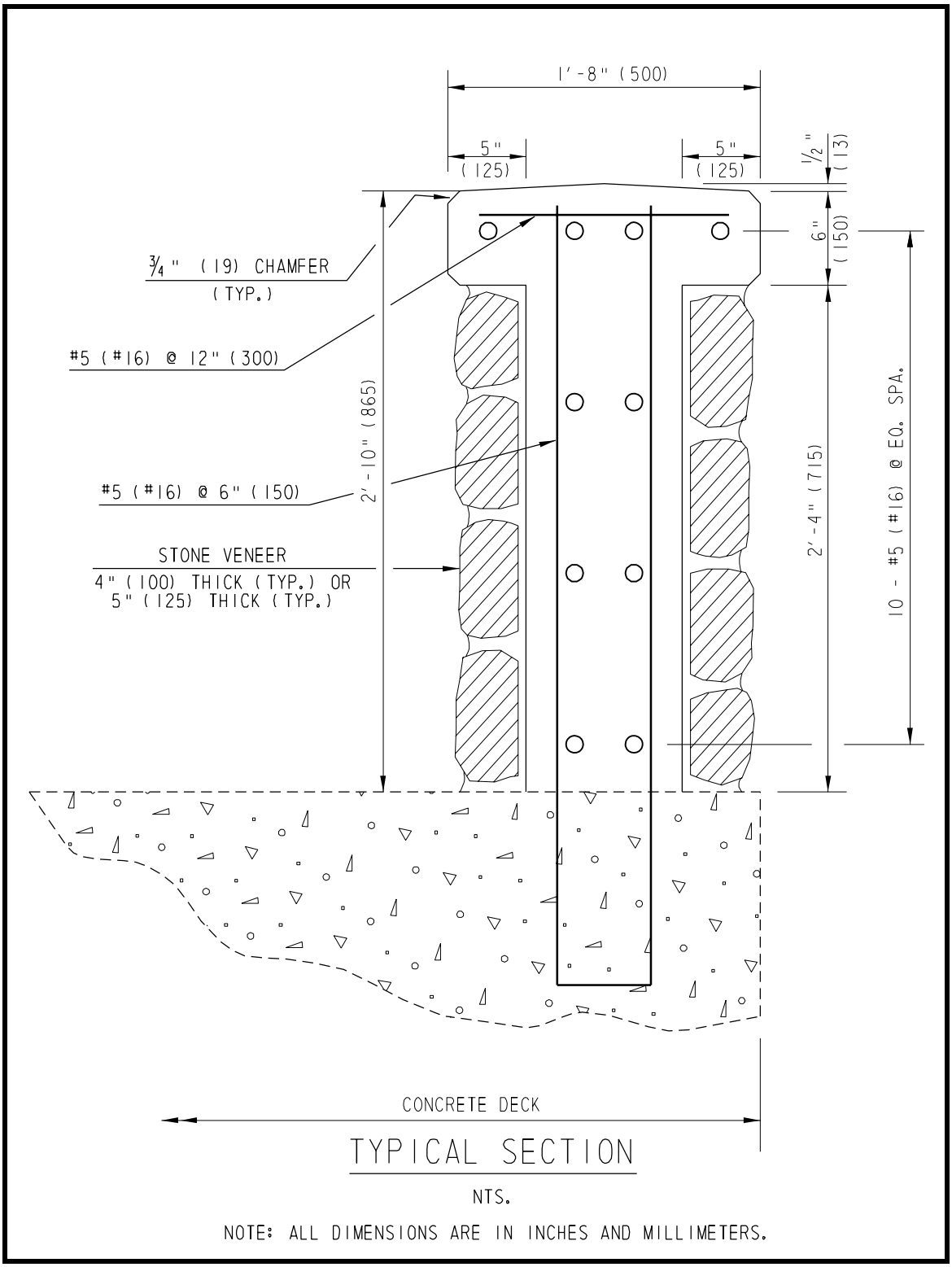

Figure 5-17a
Handrail Design Guidelines

HANDRAIL DESIGN GUIDELINES

1. Aluminum handrail assembly is Magnode Products, Inc. of Trenton, Ohio, or approved equal.

2. Posts are set perpendicular to grade.

3. Posts may be moved 0.5 in [13 mm] or less to clear expansion and deflection joints.

4. Rails are continuous from end to end of bridge with splices where rail sections cross expansion joints.

5. The centerline of any splice is located at least 2 feet [0.6 m] from the centerline of a post.

6. The bottom of post bases are thoroughly coated with an approved caulking compound or an approved zinc chromate paint.

7. Design in accordance with current AASHTO specifications.

8. Details shown in these plates are for aluminum rails. If galvanized steel rails are used, the contractor must submit details for approval by the engineer.

Figure 5-17b
Handrail Details

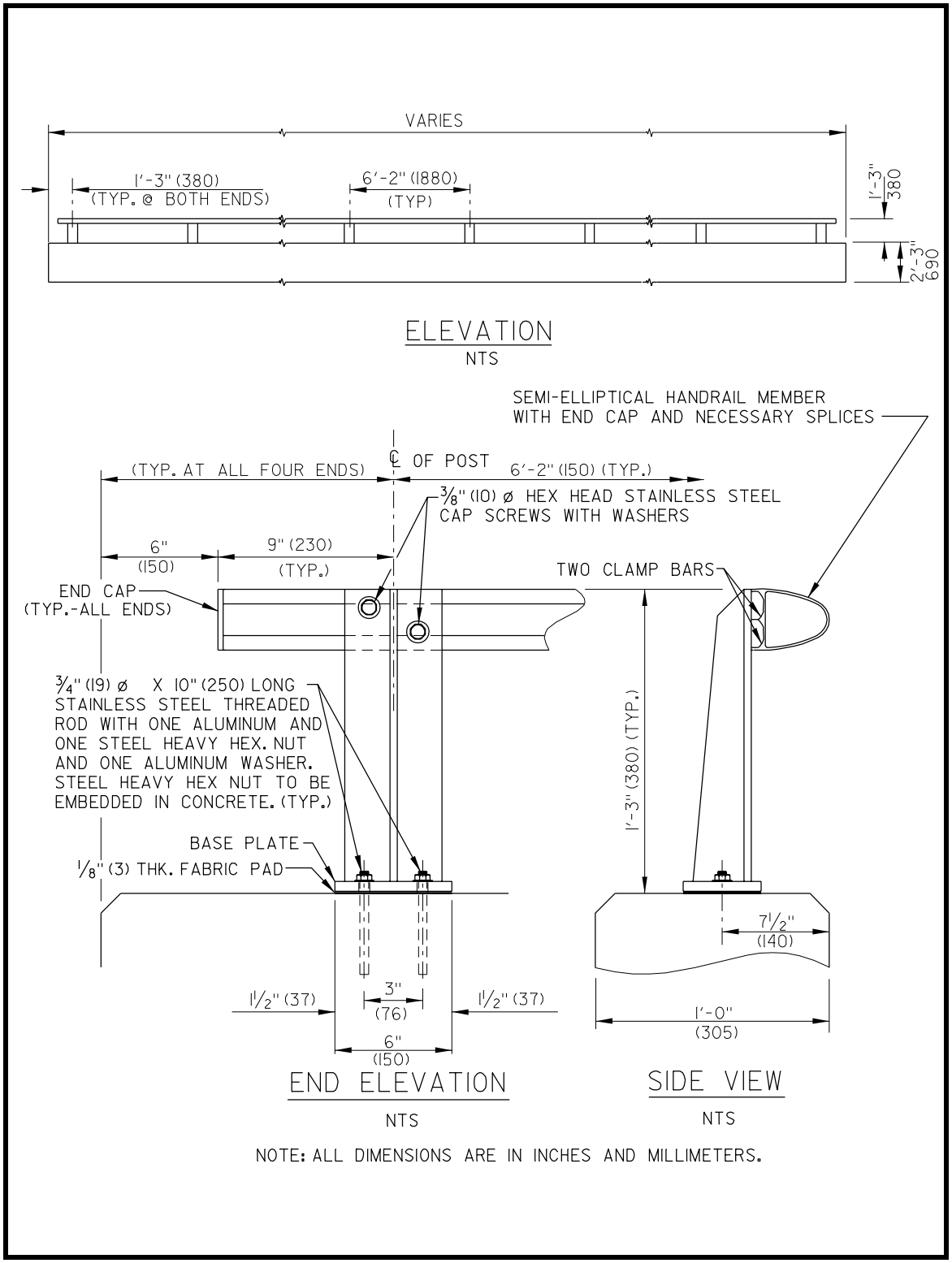

5.3.7.1.3 Materials

Class A portland cement concrete (f'_c = 4,500 psi [30 MPa] at 28 days) is used for concrete barriers.

Reinforcing steel meeting the requirements for AASHTO M31, Grade 60 [M31M, Grade 420], shall be specified. The minimum size of reinforcing is a #5 [16] bar.

All reinforcing steel shall be protected with fusion-bonded epoxy. Epoxy coating conforming with AASHTO M284 [M284M] shall be specified.

5.3.7.1.4 Cover

The minimum cover over reinforcing bars is 2 in [50 mm].

5.3.7.1.5 Guardrail to Barrier Connections

The post spacing for guardrail approaching a bridge is decreased to provide a greater resistance to impact. The guardrail must be solidly anchored to the bridge barrier. Refer to the DelDOT *Standard Construction Details*. The design of the connection must have been crash-tested in accordance with Section 5.2.7.1.2.

5.3.7.2 Screening and Shields

Screening is provided on selected bridges to prevent the throwing of debris onto vehicles passing beneath the bridge. Screening will be provided on a case-by-case basis. See Figure 5-18 for details. Refer to AASHTO's *A Guide for Protective Screening of Overpass Structures*.

Shields are typically required on railroad overpasses to prevent train headlights from blinding vehicle drivers. Refer to Figure 5-19.

5.3.7.3 Sidewalks

If the approach roadway has a sidewalk, the bridge sidewalk width should match the approach. Bridge sidewalks may be justified where there is no approach sidewalk. These will be evaluated on a case-by-case basis considering the need, cost, right-of-way and the possibility of future approach sidewalk construction. The standard width for sidewalks on bridges is 5'-0" [1.5 m], not including the curb. Refer to the DelDOT *Policy Implement Number O-02 - Sidewalk Policy*.

Figure 5-18a
Screening Details

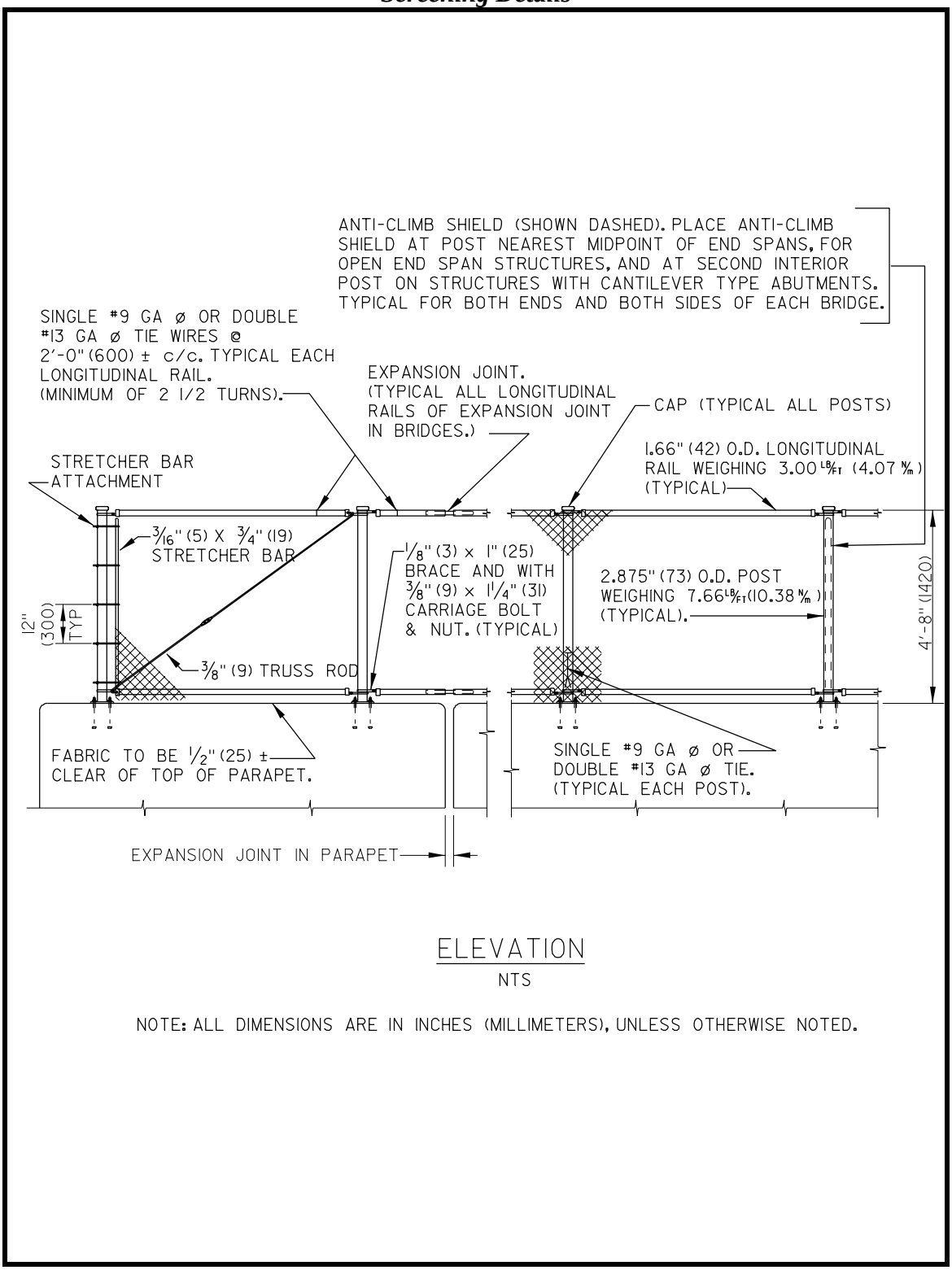

Figure 5-18b
Screening Details

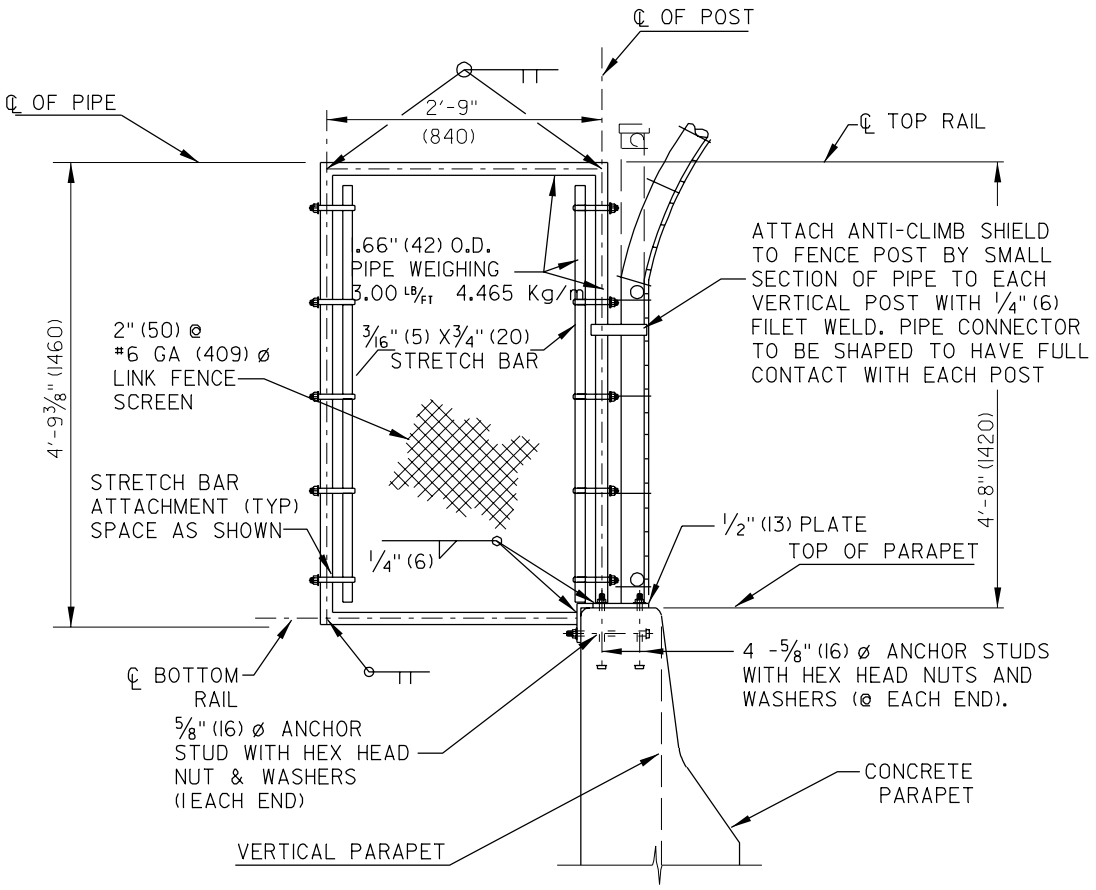

TYPICAL SECTION

NTS

NOTE: ALL DIMENSIONS ARE IN FEET-INCHES (MILLIMETERS).

Figure 5-19
Shield Details

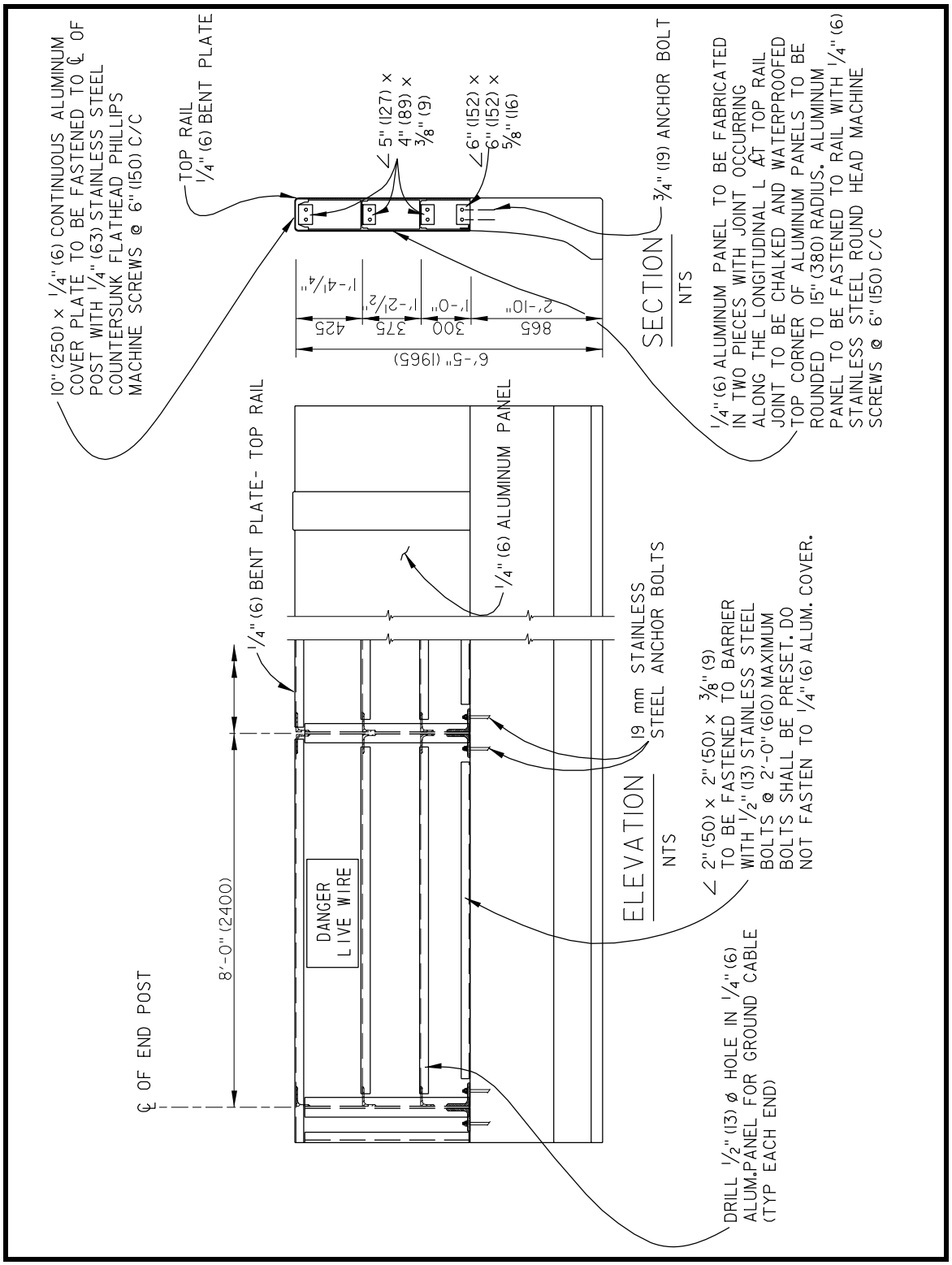

5.3.7.4 Curbs

Curbs are not normally used without sidewalks on Delaware bridges. A monolithic curb and sidewalk may be appropriate on low speed bridges (design speed of 45 mph [70 km/h] or lower). The curb height for the bridge must match the height of the curb on the approach roadway.

5.4 STEEL BEAMS AND GIRDERS

5.4.1 TYPES

Steel beams and girders may be straight or curved. Straight beams and girders are preferred because of simplicity of design and lower fabrication costs. The following types of steel beams and girders are used in Delaware:

- rolled I-beams;
- welded-plate girders;
- haunched girders; and
- steel box girders.

Rolled I-beams are used for spans up to 90 feet [27 m]. Their advantages are:

- economical use of material for shorter spans;
- the simplicity of construction results in savings; and
- straightforward design.

Welded-plate girders are used for spans greater than 90 feet [27 m]. Their advantages are:

- simpler to design than haunched or box girders;
- the simplicity of construction results in savings over haunched or box girders; and
- fabrication is easier and can be more automated.

Hybrid girders utilizing high-performance steel could be used for longer spans.

Haunched girders are used for spans greater than 90 feet [27 m], and where:

- vertical clearance cannot be attained with welded-plate girders; or
- aesthetics are considered.

Haunched girders are also used for spans greater than 130 feet [40 m], where:

- a variable section depth is structurally more efficient; and
- longer spans permit fabrication and materials cost savings.

Portions of haunched girders, such as cross frames and wind bracing, require special fabrication.

Steel box girders are three-sided steel boxes with a composite reinforced concrete deck. The advantages of box girders are:

- they have clean lines and pleasing appearance;
- shorter total section depth is possible than with multi-beam plate girders; and
- optimization of materials usage.

The disadvantages are that:

- the beams are difficult to lift into place due to their size and weight;
- redecking is more complex because of the need to maintain traffic and stage construction during deck removal and replacement (with composite design, the deck serves as an element of the compression flange);
- inspection and maintenance of the interior of box girders is more difficult; and

- complex geometric control is required for fabrication and construction.

The use of steel box girders in Delaware is discouraged because of the difficulty in construction and maintenance.

5.4.2 MATERIALS

The material for all main load-carrying members of steel bridges subject to tensile stresses shall meet AASHTO requirements for notch toughness. Refer to Section 6.6.2, Fracture, in the *AASHTO Specifications*.

Normally, AASHTO M270, Grade 50 [M270M, Grade 345], structural steel is used. Painting is required.

AASHTO M270, Grade 50W [M270M, Grade 345W], structural steel weathers to preclude the need for painting. Weathering steel may be considered for structures over high traffic volume roadways or railroads where access for painting or repainting is limited or dangerous. The use of weathering steel will be evaluated on a case-by-case basis and is subject to approval of the Bridge Design Engineer. Refer to the FHWA report *Forum on Weathering Steel for Highway Structures: Summary Report*. Weathering steel should not be used in corrosive environments where there is high humidity or high concentrations of chloride. The site should be tested for chloride before specifying weathering steel. It is required to paint the ends of weathering steel beams near bearings and under joints. Refer to Section 5.3.5 for painting of structural steel, including the ends of weathering steel beams.

5.4.3 DESIGN

Design references are given in Section 6, Steel Structures, in the *AASHTO Specifications*.

5.4.3.1 Redundancy Requirements

Whenever possible, the superstructure should be a redundant design. A redundant structure has multiple load paths available to share the loads should a single member fail.

Non-redundant structures are fracture-critical. A fracture-critical structure is a structure where the failure of a single tension member or tension component of a member will cause failure of the span. Fracture-critical designs should be avoided if at all possible. If a design contains fracture-critical members, these members must be specifically identified on the plans.

It is Department policy to avoid pin and hanger connection designs because of the difficulty of inspecting and maintaining them.

5.4.3.2 Beam Spacing

To support the redundancy requirements, the Department has adopted the following spacings for steel beams:

- Minimum - 8'-0" [2.4 m]
- Desirable - 9'-0" [2.7 m]
- Maximum - 10'-0" [3.0 m]

Where vertical clearance is not a problem, a wider maximum spacing (up to 12'-6" [3.8 m]) may be justified with the approval of the Bridge Design Engineer on a case-by-case basis.

5.4.3.3 Fatigue Design Criteria

See Section 6.6, Fatigue and Fracture Considerations, in the *AASHTO Specifications*. The designer must be aware of the details of built-up members and connections fabricated by welding. Certain details can significantly impact the allowable range of stress by creating a

connection or splice that has a very low fatigue threshold. When a member fails due to fatigue, a crack forms which can grow without increased stress and potentially cause failure of the member. Also see AASHTO's *Guide Specifications for Fatigue Design of Steel Bridges* and FHWA's *Economical and Fatigue Resistant Steel Bridge Details*.

The designer should be aware of allowable fatigue stress range criteria as shown in AASHTO as well as the weld detail categories and the kinds of stresses (tension, shear, or reverse). See Section 6.6.2, Fracture, the *AASHTO Specifications*. Delaware is in Temperature Zone Designation 2 for Charpy V-notch impact requirements.

5.4.3.4 Beam Design

The Department follows AASHTO design procedures for beam design. One exception is cover plate design. The Department does not permit the use of cover plates.

Use a minimum flange plate thickness of 0.75 in [19 mm] and width of 12 in [305 mm] to reduce warping during fabrication, improve transportation stability, and reduce erection problems.

5.4.3.5 Welding and Welding Procedures

The Department follows the *ANSI/AASHTO/AWS D1.5 Bridge Welding Code* for welding design. Electroslag welding is one exception to the Code; its use is not permitted for Delaware bridges.

Fillet welds are preferred over other types of welds because they are easier to make with automated welding equipment and grinding may be reduced in preparing the steel plates for welding. Welds should be designed and details prepared which minimize the need for backing bars.

5.4.3.6 Shear Connectors

Stud-type shear connectors are used for both positive and negative moment areas. Studs with a 0.875 in [22 mm] diameter are used. In negative moment areas, the maximum stud spacing is 2'-0" [600 mm]. See Figure 5-20.

5.4.3.7 Stiffeners, Diaphragms, and Bracing

Two types of stiffeners are used: transverse and longitudinal.

Transverse stiffeners may be either intermediate or bearing. For girders with webs 4'-6" [1.37 m] or smaller, it is preferable not to use intermediate stiffeners. For girders with webs larger than 4'-6" [1.37 m], the web thickness may be increased to limit the transverse stiffeners to only one or two locations per span beyond those provided for diaphragm or cross frame connections. Transverse stiffeners must be a minimum of 0.375 in [9.5 mm] thick. Stiffeners shall be welded to the web with a minimum 0.1875 in [4.8 mm] continuous fillet weld. Intermediate stiffeners will be welded to the compression flange and tight fit to the tension flange. Bearing stiffeners shall be welded to both the top and bottom flanges. Transverse stiffeners used as connection plates for diaphragms will be welded or bolted to both flanges, and the flange stress shall be investigated for fatigue. See Figures 5-21 to 5-27 for details. Transverse stiffeners will be clipped as shown in the figure.

Figure 5-20
Shear Developer – Steel Beams

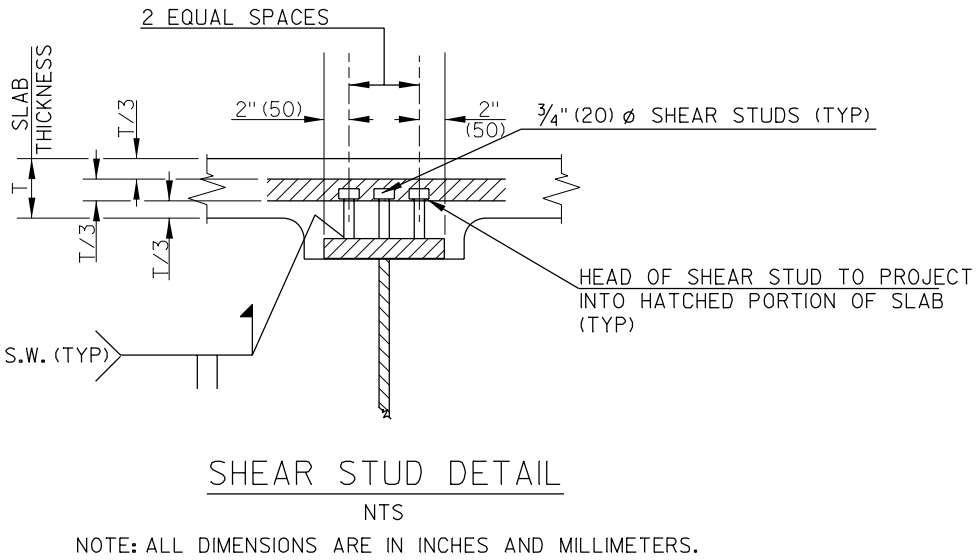

Figure 5-21a
Intermediate and Bearing Stiffener Details – Steel Beams

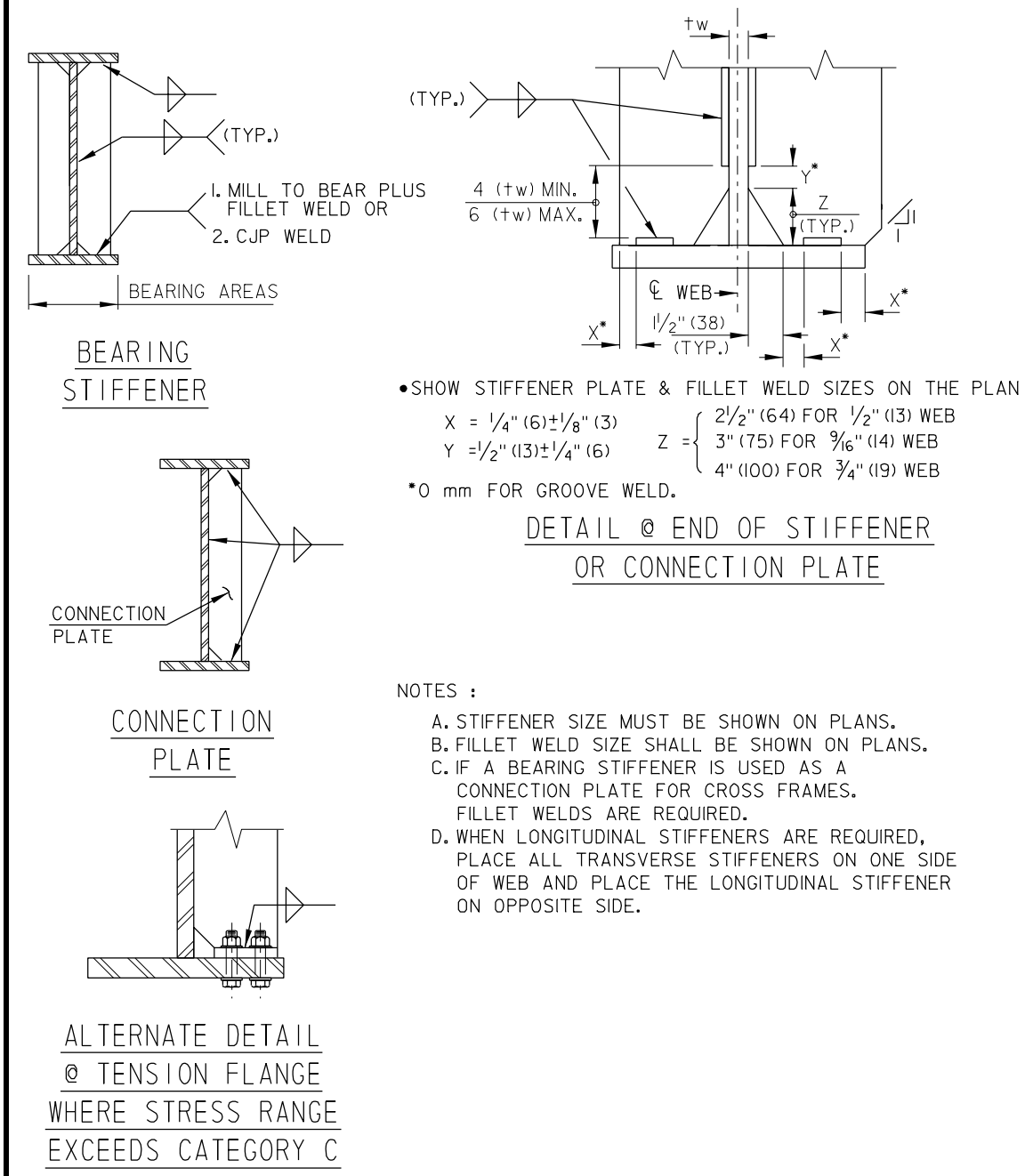

Figure 5-21b
Intermediate and Bearing Stiffener Details – Steel Beams

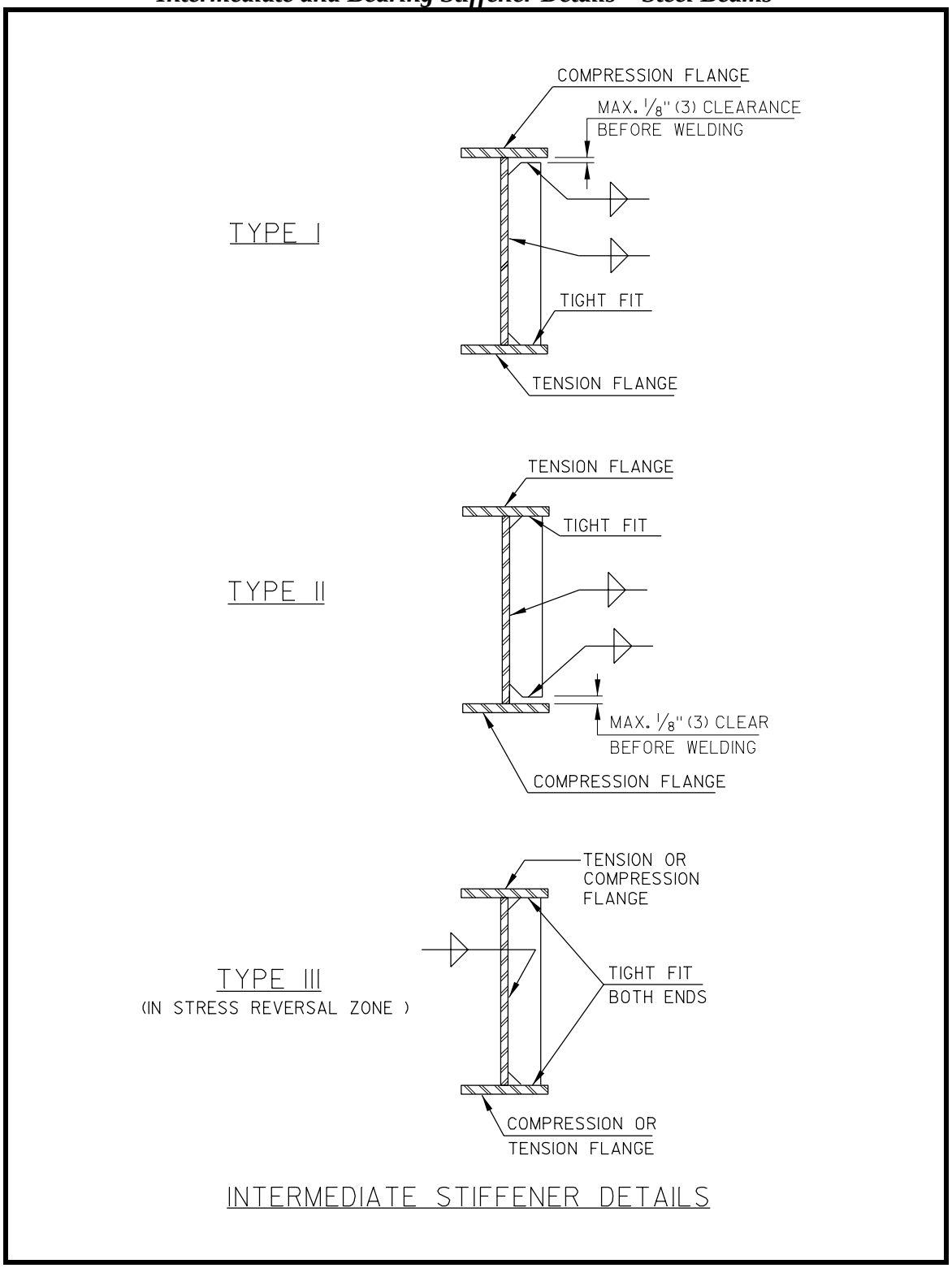

Figure 5-22
Cross Frame Details – Steel Beam Example

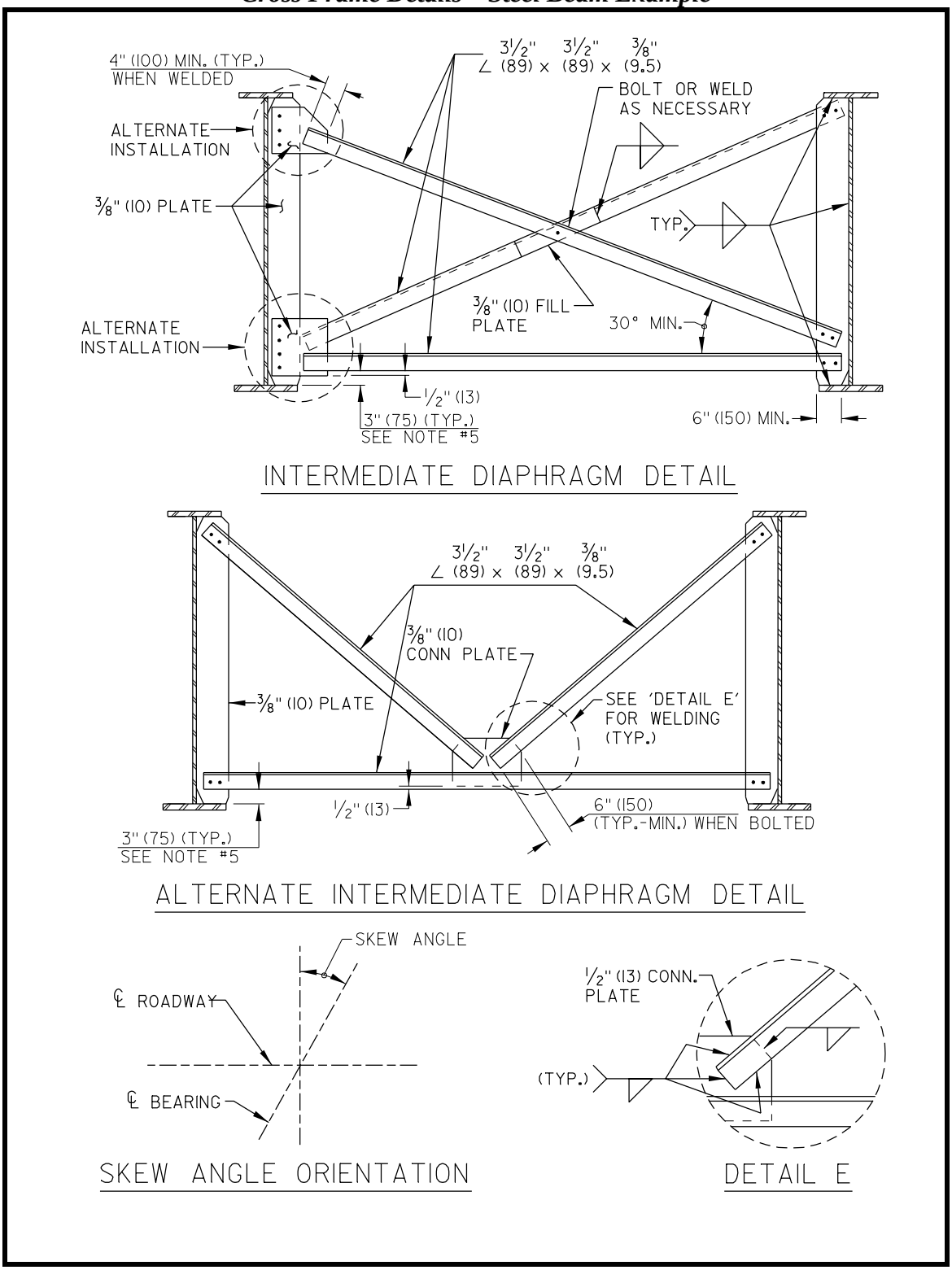

Figure 5-23a
End Cross Frame Details – Steel Beam Example

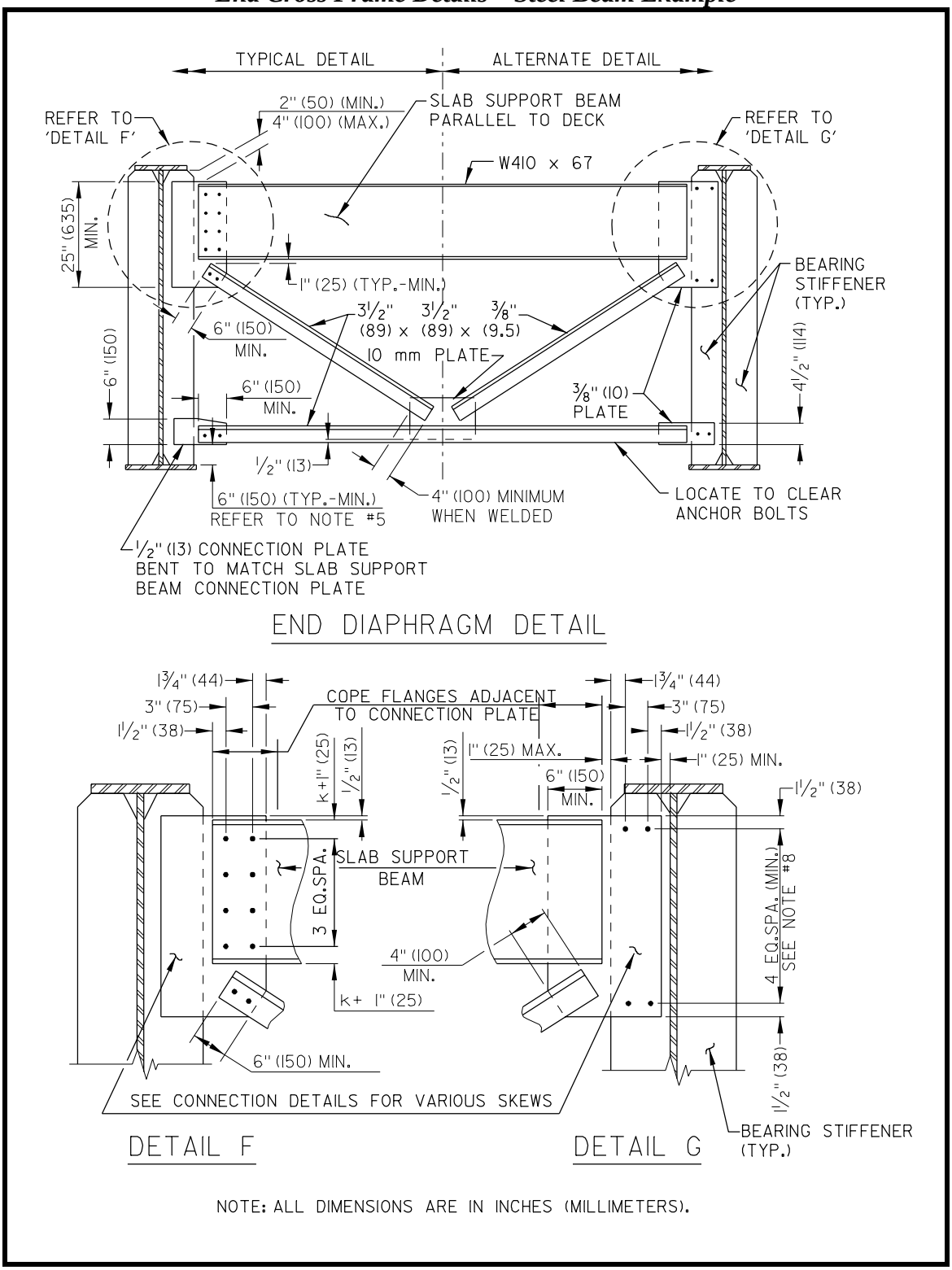

Figure 5-23b
End Cross Frame Details – Steel Beam Example

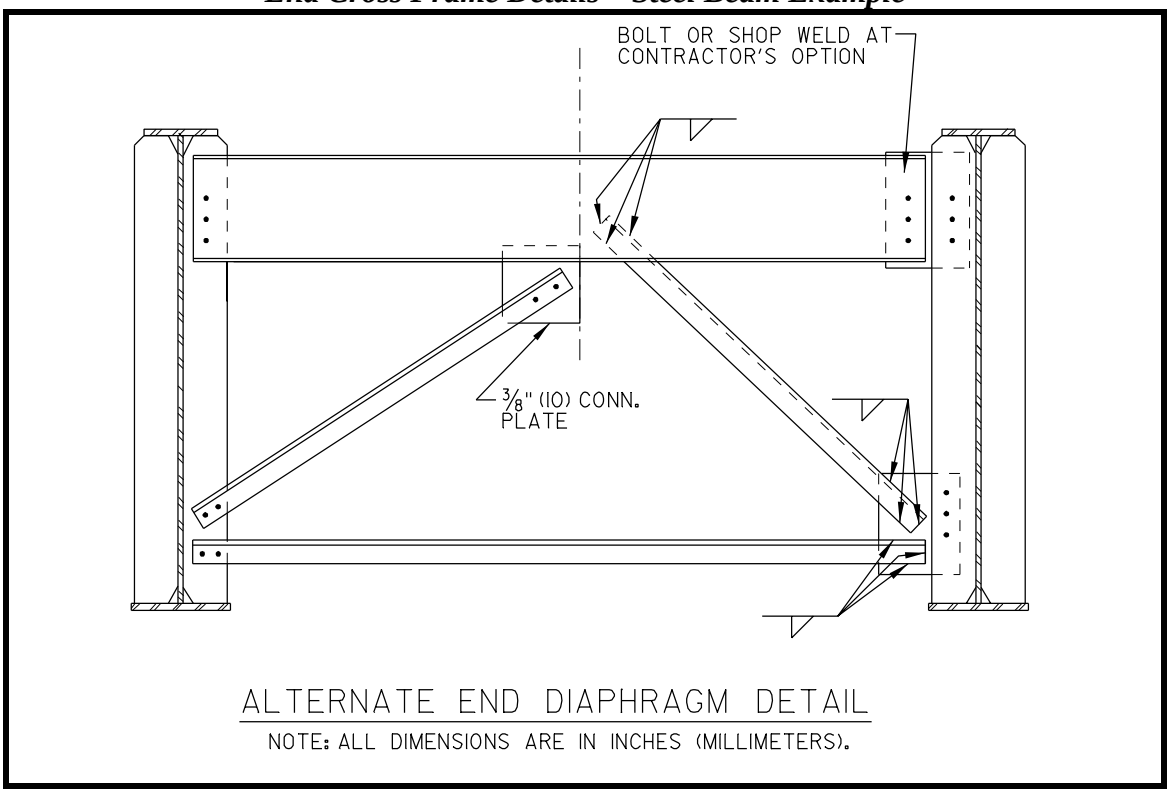

Figure 5-24a
Connection Plate Details – Steel Beam Example

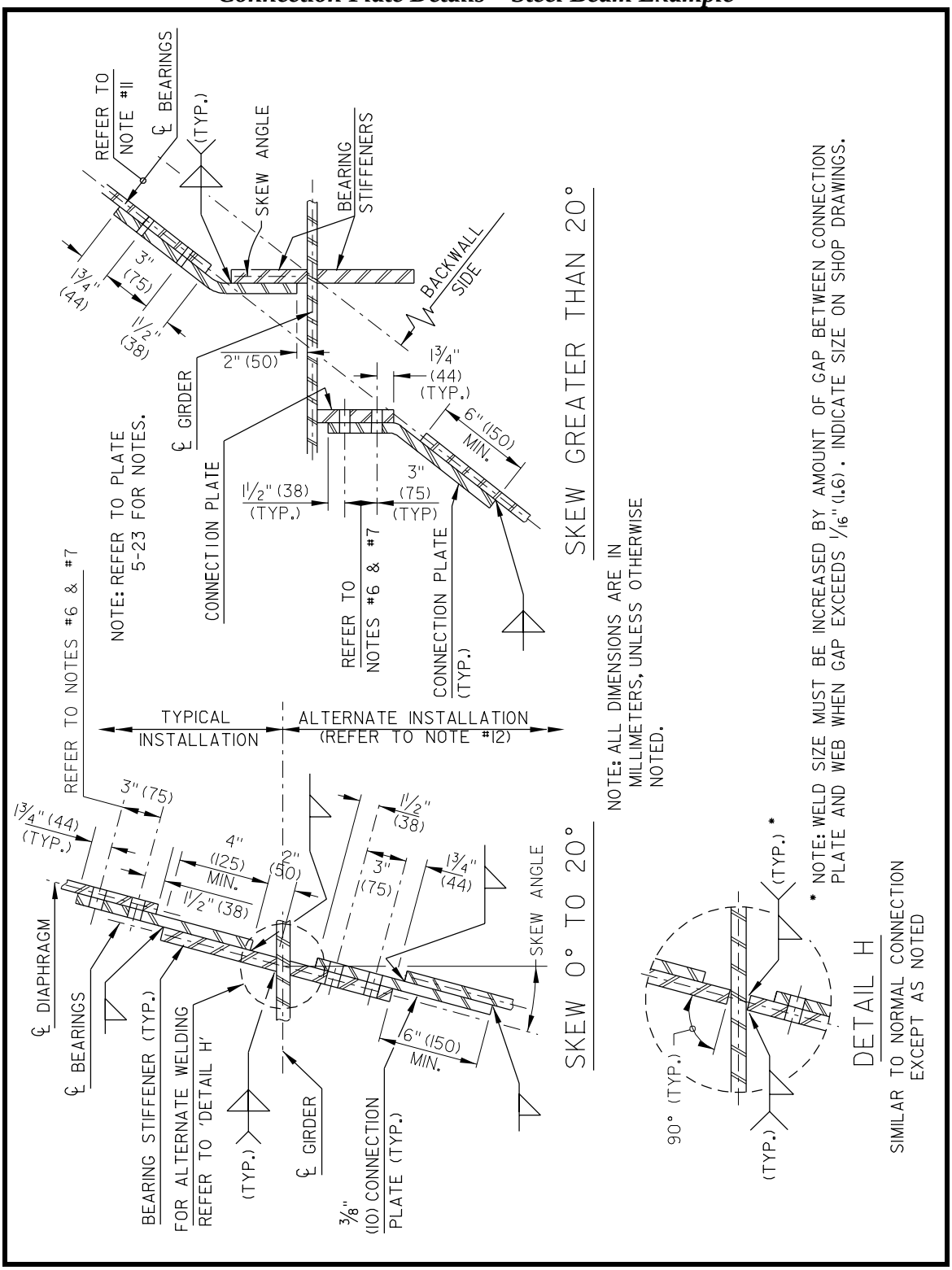

Figure 5-24b
Connection Plate Details – Steel Beam Example

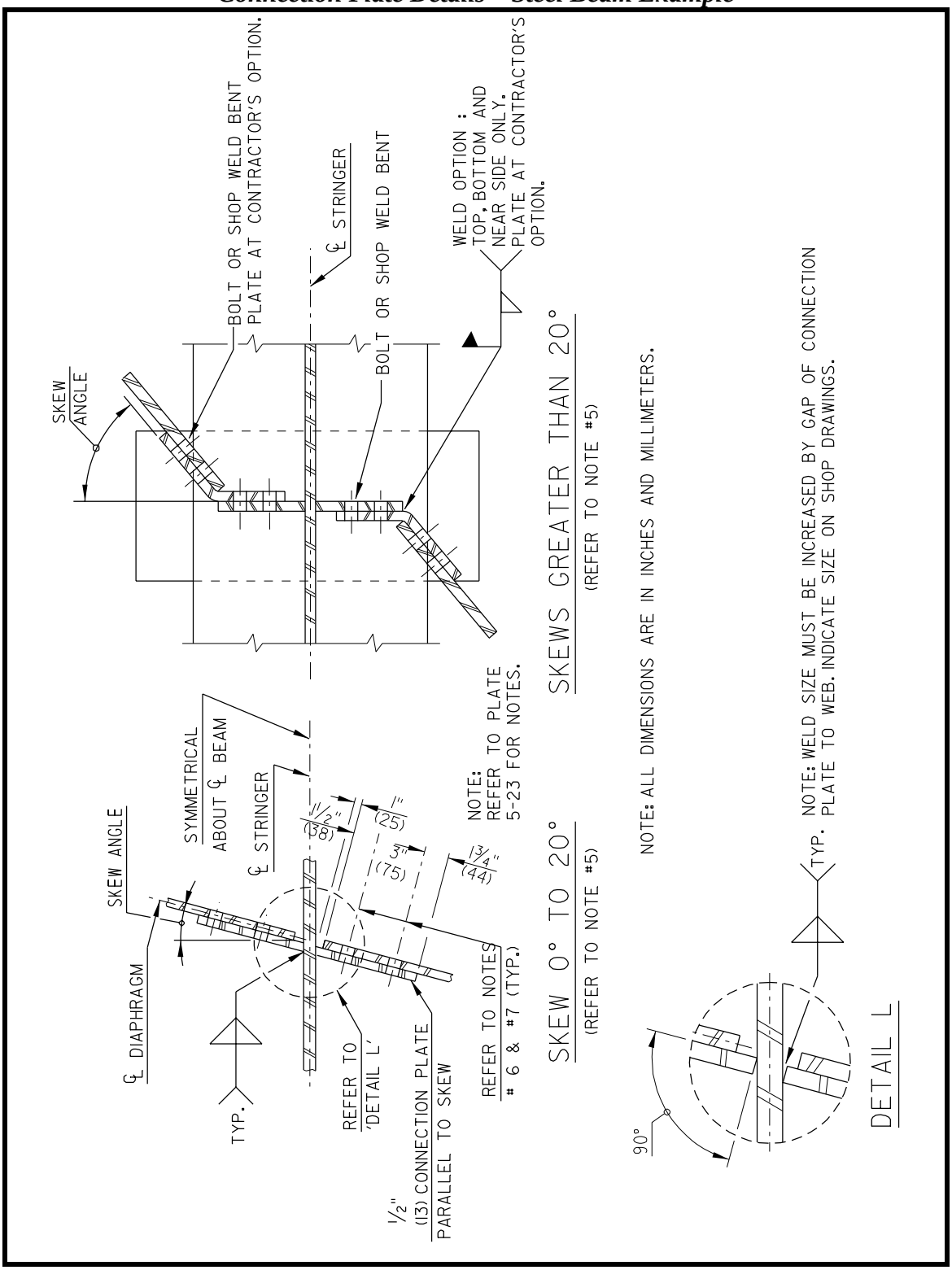

Figure 5-25
Lateral Bracing Details – Steel Beam Example

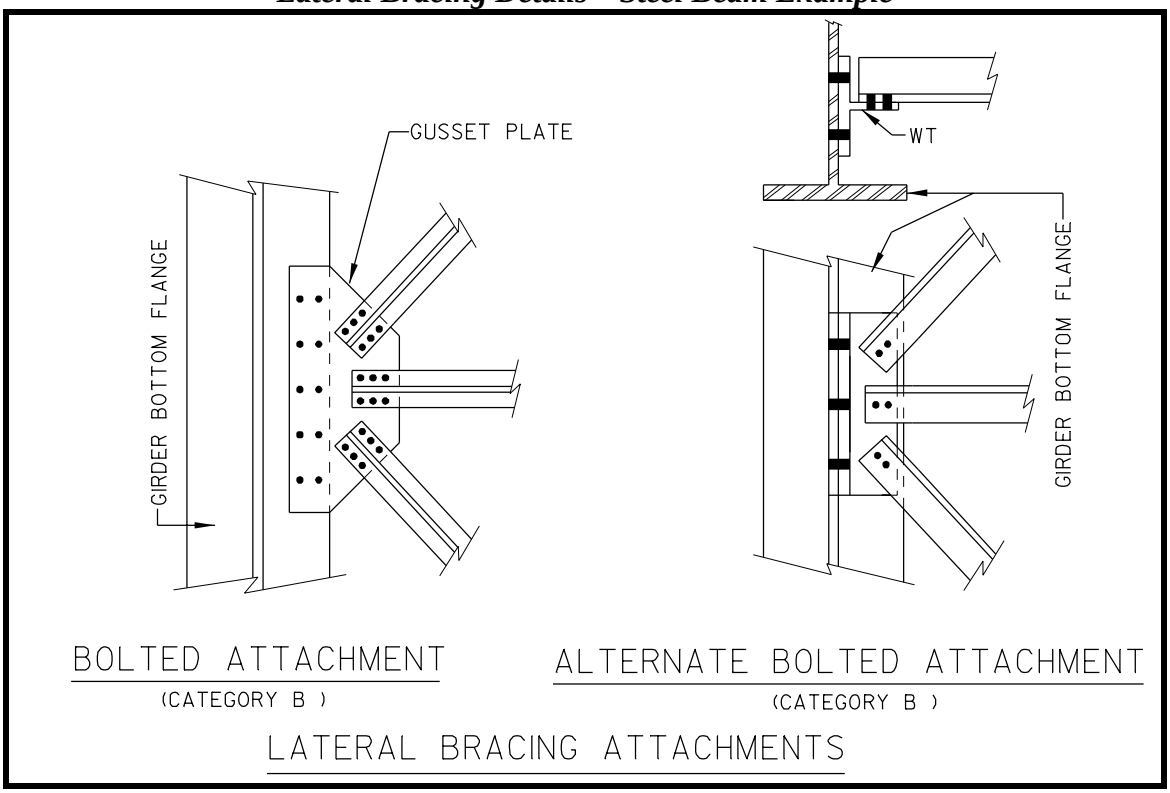

Figure 5-26a
Rolled Beam Intermediate Diaphragm Detail Example

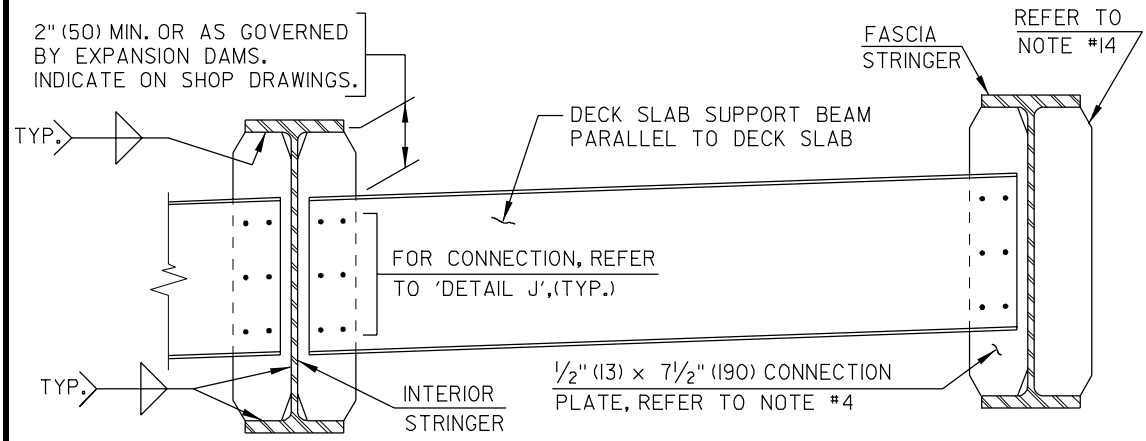

END DIAPHRAGM
FOR ROLLED SECTIONS

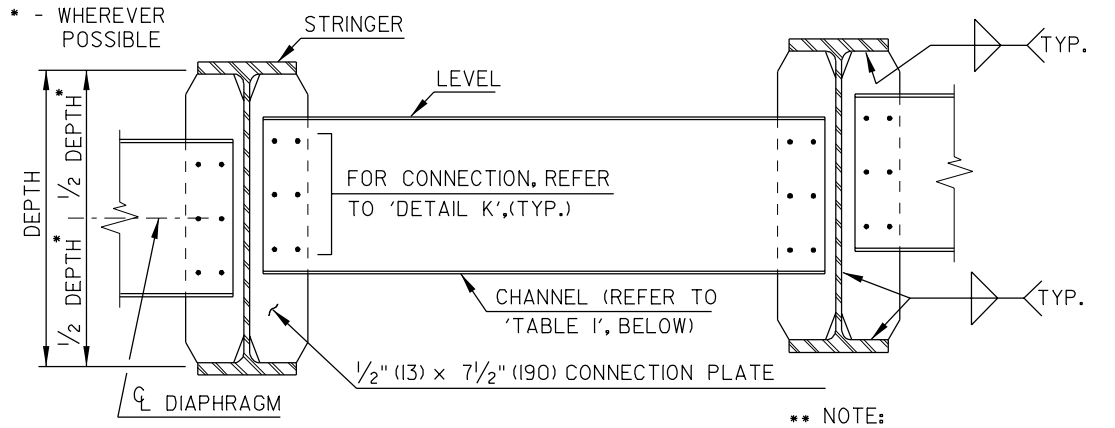

** NOTE:
INTERMEDIATE DIAPHRAGMS ON PLATE 5-19 ARE AN ACCEPTABLE ALTERNATE.

INTERMEDIATE DIAPHRAGM**
FOR ROLLED SECTIONS

TABLE I

STRINGER SIZE	DIAPHRAGM SIZE	NO. OF BOLTS
≥ 27" (690) DEPTH	C15" X 33.9 (C 380 x 50)	8
UP TO 24" (610) DEPTH	C12" X 25 (C 310 x 37)	6

NOTE: ALL DIMENSIONS ARE IN INCHES (MILLIMETERS).

Figure 5-26b
Rolled Beam Intermediate Diaphragm Detail Example

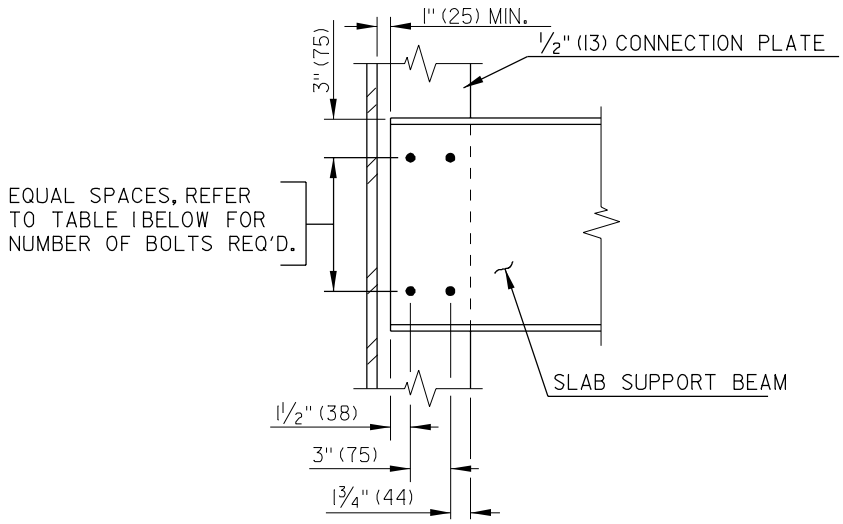

DETAIL J
END DIAPHRAGM
(REFER TO NOTES #6, #7 & #9)

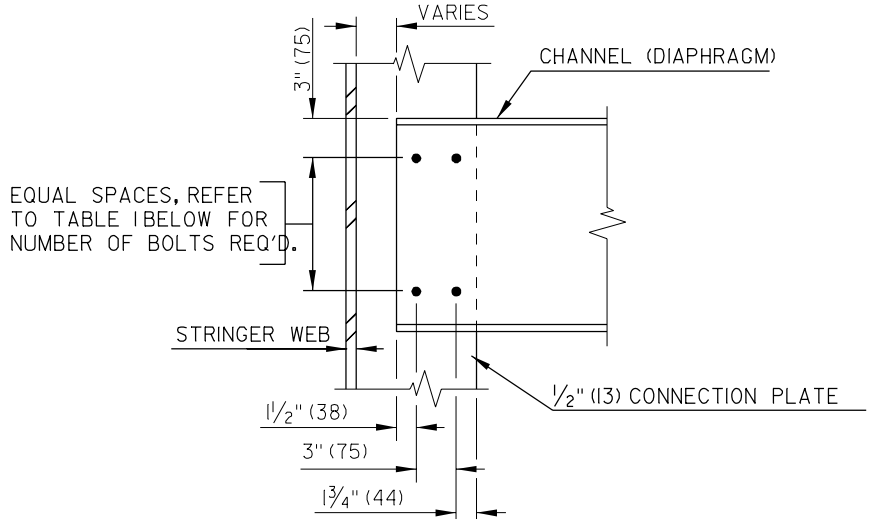

DETAIL K
INTERMEDIATE DIAPHRAGM
(REFER TO NOTE #6)

TABLE 1

STRINGER SIZE	DIAPHRAGM SIZE	NO. OF BOLTS
≥ 27" (690) DEPTH	C15" X 33.9 (C 380 × 50)	8
UP TO 24" (610) DEPTH	C12" X 25 (C 310 × 37)	6

NOTE: ALL DIMENSIONS ARE IN INCHES (MILLIMETERS).

Longitudinal stiffeners are used to improve the bending resistance of welded-plate girders. Because of the increased fabrication complexity and greater likelihood of occurrence of welds or weld-intersection flaws, longitudinal stiffeners may be used only with the approval of the Bridge Design Engineer. The longitudinal stiffeners should always be placed on the opposite side of the web from the transverse intermediate stiffeners to minimize the number of intersections between longitudinal and transverse stiffeners. Transverse intermediate stiffeners used for diaphragm connection plates must be placed on both sides of interior beams. Longitudinal stiffeners may not be continuous and may be cut at their intersections with transverse stiffeners. Close attention to the details at the intersection of longitudinal and transverse stiffeners is needed. Avoid intersecting welds, if possible, by stopping the welds short of the intersection. Where intersecting welds cannot be avoided, nondestructive testing (NDT) must be specified to detect weld flaws which may cause cracking. Refer to Figure 5-27.

Diaphragms, cross frames, and lateral bracing are used to stiffen and connect beams so they work as a unit. Diaphragms are used to connect rolled beams with 3'-0" [0.915 m] height or less. Channel diaphragms for rolled beams shall be at least half beam depth. Cross frames are used for rolled beams greater than 3'-0" [0.915 m] high and plate girders. Cross frames shall be at least 3/4 of the girder depth. For details, refer to standards developed by the FHWA Mid-Atlantic States Structural Committee for Economical Fabrication.

Diaphragm spacing shall be determined by the method specified in Section 6.7.4, Diaphragms and Cross-Frames, in the *AASHTO Specifications*.

5.4.3.8 Field Connections

All field splices of beams or girders and diaphragm connections will be bolted. The number of splices is influenced by the length and depth of beam that can be transported to the site. Larger beams may be used at sites with access to water because barges can transport larger beams than rail or trucks. Construction considerations include site conditions and the weight of the beam. See the Section 6.13, Connections and Splices, in the *AASHTO Specifications*.

Normally, 0.875 in [22 mm] diameter, M164 [M164M] bolts are specified for field connections. In some circumstances, higher strength M253 [M253M] bolts may be considered to avoid an excessive number of bolts in splices or connections. The use of M253 [M253M] bolts must be approved by the Bridge Design Engineer. All bolts in a bridge should be the same diameter. Avoid bolts over 1 in [25 mm] in diameter.

Two types of high-strength bolts are commonly used by the Department: Type 1 and Type 3. Type 1 bolts are made from medium carbon steel. Type 3 bolts have atmospheric corrosion and weathering-resistant characteristics comparable to weathering steel. Both Type 1 and Type 3 bolts are available in 0.5 in [12.7 mm] to 1.5 in [38.1 mm] diameters.

Type 1 M164 [M164M] bolts are mechanically galvanized, and painted after installation. Hot-dip galvanizing is not permitted. Type 3 M164 [M164M] bolts and Type 1 and Type 3 M253 [M253M] bolts are not galvanized, but are painted after installation.

Figure 5-27a
Longitudinal/Transverse Stiffener Intersection Details – Steel Beams

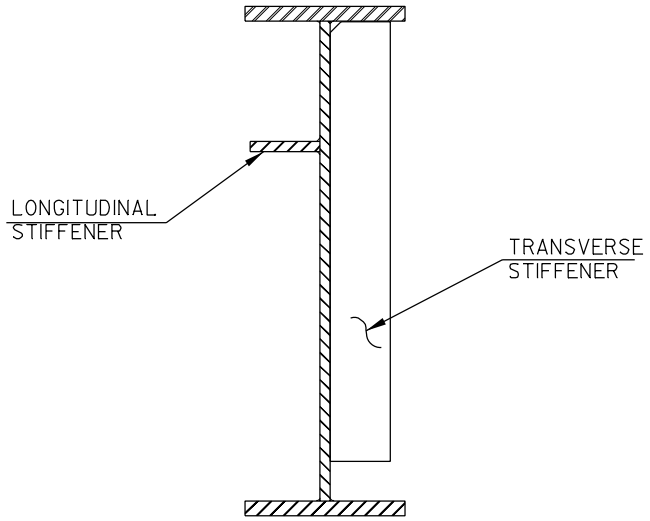

LONGITUDINAL STIFFENER ON SIDE OF WEB
OPPOSITE TRANSVERSE STIFFENER.

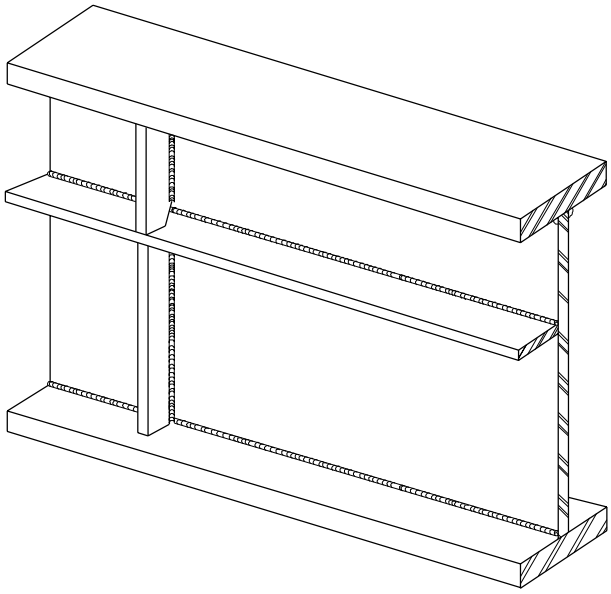

ACCEPTABLE DETAIL FOR TRANSVERSE AND LONGITUDINAL
STIFFENER ON A COMMON SIDE OF THE WEB.

Figure 5-27b
Longitudinal/Transverse Stiffener Intersection Details – Steel Beams

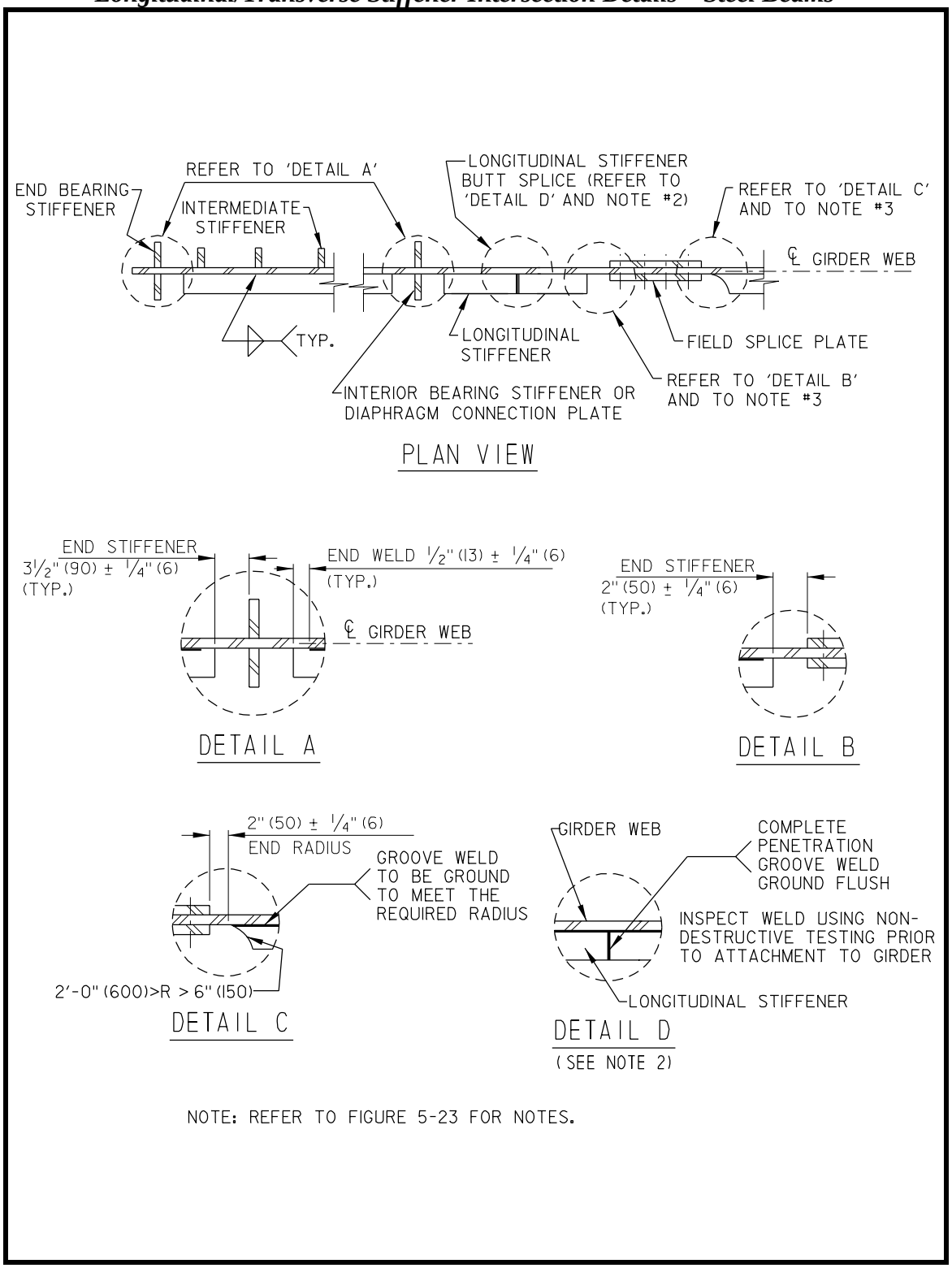

Splice plate thickness should be increased where longitudinal web stiffeners are terminated at bolted field splices. Thicker webs can be used to eliminate the need for longitudinal stiffeners.

5.4.4 CAMBER DIAGRAMS

Beams must be cambered in the fabrication process. A camber diagram is needed for proper fabrication of the beam and must be included in the bridge plans. A typical camber diagram is shown in Figure 5-28. Camber deflections should be computed for each beam at the 1/10th points of each span or at 10 foot [3 m] intervals, whichever is less, the same as for finished deck elevations. (See Section 5.2.4.)

The designer should furnish camber deflections for the following loadings:

- dead load due to weight of structural steel,
- dead load due to stay-in-place forms, deck reinforcing steel, and concrete deck,
- dead load due to superimposed dead loads such as wearing surfaces, sidewalks, parapets, and utilities,
- camber for vertical curve ordinate to meet proposed roadway profile, and
- total of dead load deflections and camber.

In developing camber diagrams, the designer should consider the differences in loadings, such as the effects of sidewalks, parapets, and barriers, on individual beams and girders. The deflections caused by the dead load from the structural steel, forms, and reinforced concrete deck are resisted by the steel superstructure. Deflections caused by superimposed dead load are resisted by the composite section comprised of the reinforced concrete deck and the superstructure. The fascia beam likely will not deflect the same as interior beams. Consequently, a camber diagram must be provided for fascia beams as well as for interior beams. Because the screed rail for the deck finishing machine is set from the fascia beam, camber of the fascia beam is critical to achieve the correct deck elevations, the specified deck thickness and proper drainage.

Because of the potential hazard from ponding and freezing of water on the deck, the designer must evaluate beam deflections, deck cross slope and roadway geometry as well as scupper locations to ensure that water drains properly.

5.4.5 PROTECTIVE COATINGS

The designer must provide for painting all structural steel, except weathering steel. Refer to Section 605 of the *Standard Specifications*. Normally, green, Standard Color No. 24172, Federal Standard No. 595B, is used. The use of other colors requires approval from the Assistant Director, Design, with documentation as to the reasons for the change.

It may be desirable to paint the ends of weathering steel girders near bearing areas under joints. Normally, the length of the painted area is 1.5 times the depth of the beam. Where weathering steel is painted, brown Standard Color No. 10076, Federal Standard No. 595B, is used.

Figure 5-28a
Typical Camber Diagram for Steel Beams (U.S. Customary)

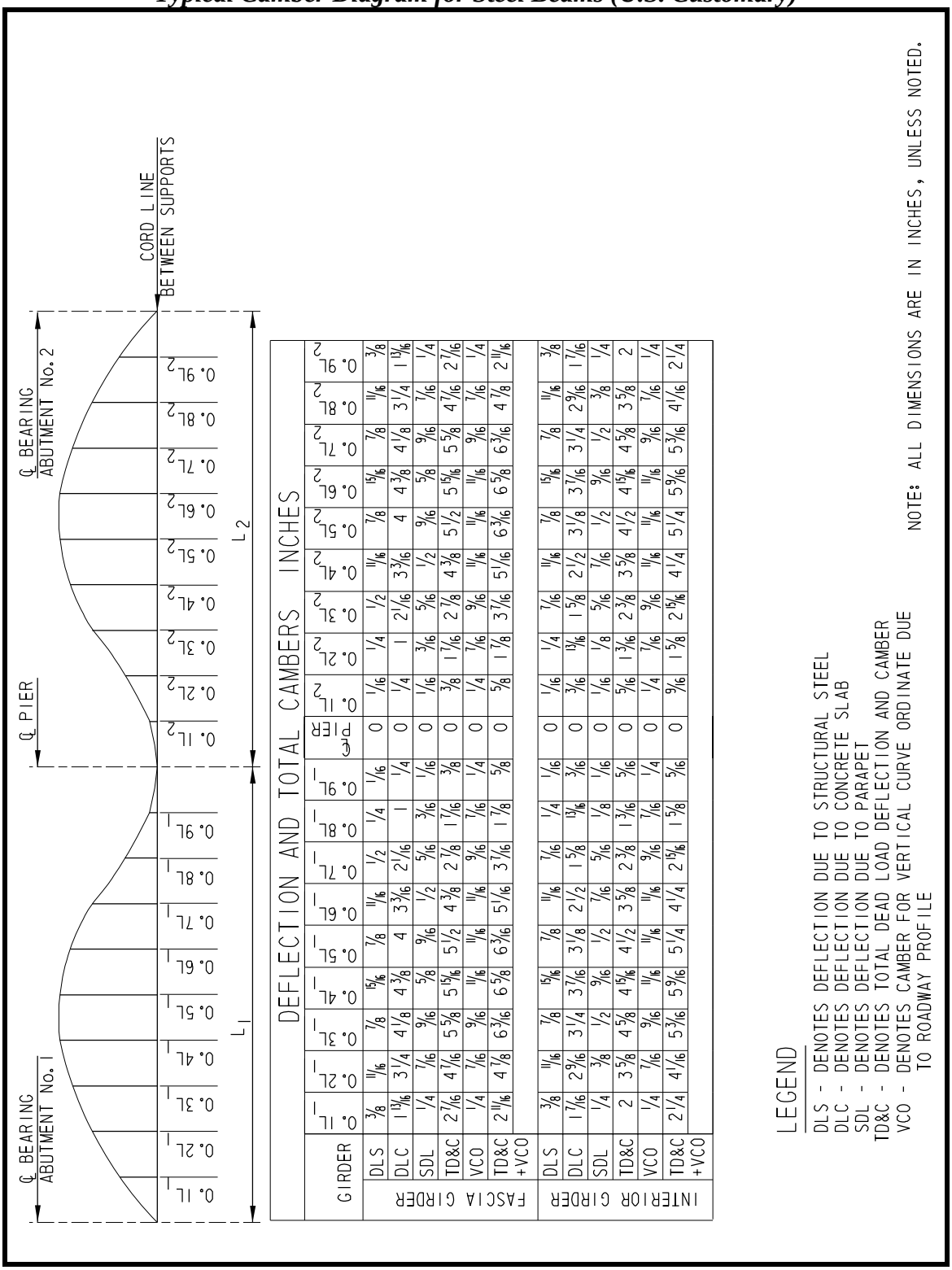

DEFLECTION AND TOTAL CAMBERS INCHES

	GIRDER	0.1L1	0.2L1	0.3L1	0.4L1	0.5L1	0.6L1	0.7L1	0.8L1	0.9L1	℄ PIER	0.1L2	0.2L2	0.3L2	0.4L2	0.5L2	0.6L2	0.7L2	0.8L2	0.9L2
FASCIA GIRDER	DLS	3/8	11/16	7/8	15/16	7/8	11/16	1/2	1/4	1/16	0	1/16	1/4	1/2	11/16	7/8	15/16	7/8	11/16	3/8
	DLC	1 13/16	3 1/4	4 1/8	4 3/8	4	3 3/16	2 1/16	1	1/4	0	1/4	1	2 1/16	3 3/16	4	4 3/8	4 1/8	3 1/4	1 13/16
	SDL	1/4	7/16	9/16	5/8	9/16	1/2	5/16	3/16	1/16	0	1/16	3/16	5/16	1/2	9/16	5/8	9/16	7/16	1/4
	TD&C	2 7/16	4 7/16	5 5/8	5 15/16	5 1/2	4 3/8	2 7/8	1 7/16	3/8	0	3/8	1 7/16	2 7/8	4 3/8	5 1/2	5 15/16	5 5/8	4 7/16	2 7/16
	VCO	1/4	7/16	9/16	11/16	11/16	9/16	7/16	7/16	1/4	0	1/4	7/16	9/16	11/16	11/16	11/16	9/16	7/16	1/4
	TD&C +VCO	2 11/16	4 7/8	6 3/16	6 5/8	6 3/16	5 1/16	3 7/16	1 7/8	5/8	0	5/8	1 7/8	3 7/16	5 1/16	6 3/16	6 5/8	6 3/16	4 7/8	2 11/16
INTERIOR GIRDER	DLS	3/8	11/16	7/8	15/16	7/8	11/16	7/16	1/4	1/16	0	1/16	1/4	7/16	11/16	7/8	15/16	7/8	11/16	3/8
	DLC	1 7/16	2 9/16	3 1/4	3 7/16	3 1/8	2 1/2	1 5/8	13/16	3/16	0	3/16	13/16	1 5/8	2 1/2	3 1/8	3 7/16	3 1/4	2 9/16	1 7/16
	SDL	1/4	3/8	1/2	9/16	1/2	7/16	5/16	1/8	1/16	0	1/16	1/8	5/16	7/16	1/2	9/16	1/2	3/8	1/4
	TD&C	2	3 5/8	4 5/8	4 15/16	4 1/2	3 5/8	2 3/8	1 3/16	5/16	0	5/16	1 3/16	2 3/8	3 5/8	4 1/2	4 15/16	4 5/8	3 5/8	2
	VCO	1/4	7/16	9/16	11/16	11/16	9/16	7/16	7/16	1/4	0	1/4	7/16	9/16	11/16	11/16	11/16	9/16	7/16	1/4
	TD&C +VCO	2 1/4	4 1/16	5 3/16	5 9/16	5 1/4	4 1/4	2 15/16	1 5/8	5/16	0	9/16	1 5/8	2 15/16	4 1/4	5 1/4	5 9/16	5 3/16	4 1/16	2 1/4

LEGEND

DLS - DENOTES DEFLECTION DUE TO STRUCTURAL STEEL
DLC - DENOTES DEFLECTION DUE TO CONCRETE SLAB
SDL - DENOTES DEFLECTION DUE TO PARAPET
TD&C - DENOTES TOTAL DEAD LOAD DEFLECTION AND CAMBER
VCO - DENOTES CAMBER FOR VERTICAL CURVE ORDINATE DUE TO ROADWAY PROFILE

NOTE: ALL DIMENSIONS ARE IN INCHES, UNLESS NOTED.

Figure 5-28b
Typical Camber Diagram for Steel Beams [Metric]

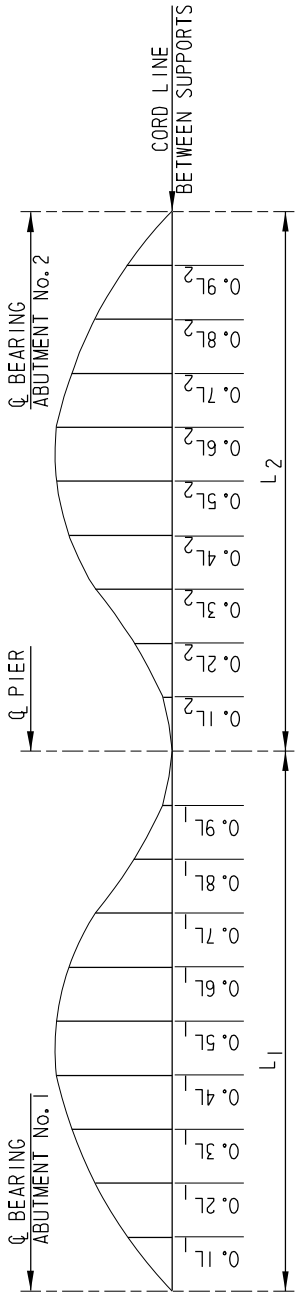

DEFLECTION AND TOTAL CAMBERS (mm)

	GIRDER	0.1L1	0.2L1	0.3L1	0.4L1	0.5L1	0.6L1	0.7L1	0.8L1	0.9L1	PIER	0.1L2	0.2L2	0.3L2	0.4L2	0.5L2	0.6L2	0.7L2	0.8L2	0.9L2
FASCIA GIRDER	DLS	10	17	22	24	22	17	13	6	2	0	2	6	13	17	22	24	22	17	10
	DLC	46	82	105	111	102	81	52	25	6	0	6	25	52	81	102	111	105	82	46
	SDL	6	11	14	16	14	13	8	5	2	0	2	5	8	13	14	16	14	11	6
	TD&C	62	113	143	151	140	111	73	36	10	0	10	36	73	111	140	151	143	113	62
	VCO	6	11	14	17	17	17	14	11	6	0	6	11	14	17	17	17	14	11	6
	TD&C +VCO	68	124	157	168	157	129	87	48	16	0	16	48	87	129	157	168	157	124	68
INTERIOR GIRDER	DLS	10	17	22	24	22	17	11	6	2	0	2	6	11	17	22	24	22	17	10
	DLC	36	65	82	87	79	63	41	21	5	0	5	21	41	63	79	87	82	65	36
	SDL	6	10	13	143	13	11	8	3	2	0	2	3	8	11	13	143	13	10	6
	TD&C	51	92	117	125	114	92	60	30	8	0	8	30	60	92	114	125	17	92	51
	VCO	6	11	143	17	17	17	14	11	6	0	6	11	14	17	17	17	143	11	6
	TD&C +VCO	57	102	132	141	133	108	75	41	14	0	14	41	75	108	133	141	132	101	57

LEGEND

DLS - DENOTES DEFLECTION DUE TO STRUCTURAL STEEL
DLC - DENOTES DEFLECTION DUE TO CONCRETE SLAB
SDL - DENOTES DEFLECTION DUE TO PARAPET
TD&C - DENOTES TOTAL DEAD LOAD DEFLECTION AND CAMBER
VCO - DENOTES CAMBER FOR VERTICAL CURVE ORDINATE DUE TO ROADWAY PROFILE

NOTE: ALL DIMENSIONS ARE IN MILLIMETERS, UNLESS NOTED.

5.5 PRESTRESSED CONCRETE BEAMS

All concrete beams for bridges will be precast and prestressed by pretensioning. Post-tensioning may be justified for prestressing on a case-by-case basis.

5.5.1 TYPES

Delaware uses these types of precast-prestressed concrete beams:

- voided slabs,
- AASHTO I-girders,
- adjacent or spread box girders, and
- Bulb-T Girders.

AASHTO, in conjunction with the Precast/Prestressed Concrete Institute (PCI), has developed several standard voided slabs, I and box sections commonly referred to as the AASHTO Girders or the PCI-AASHTO Standard Sections.

Voided or solid slabs. The AASHTO voided slab is commonly used for short spans ranging from 30 to 50 feet [9.1 to 15 m]. AASHTO has standardized five sections to accommodate any combination of bridge width and span length in the 30 to 50 feet [9.1 to 15 m] range. The sections are 3'-0" or 4'-0" [0.9 or 1.2 m] wide with depths of 15, 18, and 21 inches [381, 457 and 533 mm]. Thinner sections may be designed without voids.

AASHTO I-Girders. These girders are generally used for short to intermediate spans. They can be modified to accommodate longer spans.

Adjacent and spread box girders. For spans greater than 50 feet [15.2 m] AASHTO has also developed a series of standard box sections. Like the voided slabs, standard sections are available in 3'-0" and 4'-0" [0.9 m and 1.2 m] widths and a variety of depths to accommodate various bridge widths and span lengths.

Bulb-T Girders. The FHWA Mid-Atlantic States Prestressed Concrete Committee for Economic Fabrication (PCEF) has developed a series of Bulb-T girders that offer a wide range of girder depths, flange widths, and web widths. These girders generally provide a more economical use of materials than the AASHTO I-Girders. The designer should use PCEF shapes.

5.5.2 MATERIALS

Concrete with an f'_c = 5,000 psi [35 MPa] is normally used for prestressed concrete beams. An increase to a higher strength is permissible when approved by the Bridge Design Engineer.

Reinforcing steel meeting the requirements for AASHTO M31, Grade 60 [M31M, Grade 420], shall be specified. The minimum size of reinforcing is a #4 [13] bar.

Normally, prestressing strands shall be high-strength 7-wire low-relaxation strand, with nominal 0.5 inch [12.7 mm] or 0.6 inch [15.2 mm] diameter, and conform to AASHTO M203, 270 ksi [1862 MPa] grade, low-relaxation strands.

On post-tensioned structures, the designer will specify that all strands will be uncoated and all strand conduits will be pressure-grouted.

5.5.3 DESIGN

Prestressed concrete beams will be designed as simply supported for dead load

and continuous for live load. Refer to Section 5, Concrete Structures, in the *AASHTO Specifications*.

5.5.3.1 Beam Spacing

The Department has adopted the following spacings for concrete beams:

- Desirable - 9'-0" [2.7 m]
- Maximum - 10'-0" [3.0 m]

These spacings do not apply to adjacent box girders. Where vertical clearance is not a problem, a wider maximum spacing (up to 12'-6" [3.8 m]) may be justified, on a case-by-case basis.

The width of the top flange of Type 5 or 6 AASHTO girders and Bulb-T girders leaves little unsupported deck. Where these girders are used, the maximum beam spacing may be increased or the thickness of the deck may be decreased to the minimum thickness specified in Section 5.2.1.3.

5.5.3.2 Composite Design

Composite flexural members consist of precast and/or cast-in-place concrete elements constructed in separate placements but so interconnected that all elements respond to superimposed loads as a unit. The entire composite member may be used in resisting shear and moment. Refer to Section 5, Concrete Structures, in the *AASHTO Specifications*. See Figure 5-29 for a typical composite box beam.

Cast-in-place deck slabs are generally designed to provide composite action with concrete box or I-girders. Precast deck slabs can be designed to provide composite action with concrete I-girders if block-outs are included in the slab and shear transfer connections are provided. In this case, a quick-setting, non-shrink concrete is placed in the blocked-out area.

The use of composite designs is recommended and must be noted under Project Notes on the plans for future reference.

5.5.3.3 Shear Developers

Bar reinforcing is used to provide resistance to horizontal shear between the deck and the girder. See Section 5.8.4, Interface Shear Transfer—Shear Friction, in the *AASHTO Specifications*. Shear developer details for adjacent concrete box girders and I-girders are shown in Figure 5-29.

Shear between adjacent concrete box girders or voided slabs can be provided by shear connections or keys. Refer to Figure 5-30. Grout and shear key shall reach a minimum compressive strength of 5 ksi [35 MPa] in 24 hours as per Section 5.14.4.3.2 of the *AASHTO Specifications.*

Figure 5-29
Composite Details for Concrete Beams

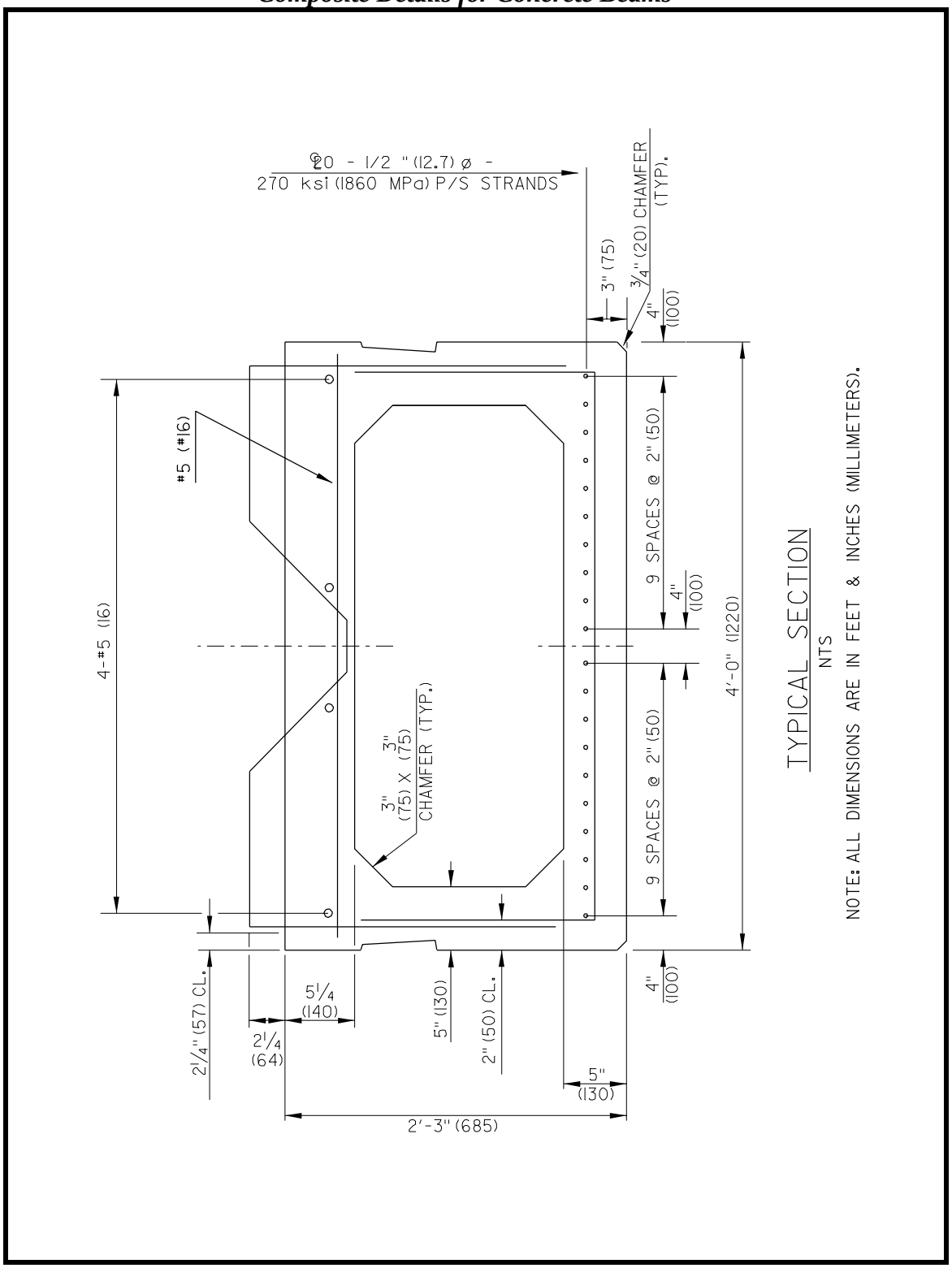

Figure 5-30
Shear Connection Details for Adjacent Concrete Box Girders

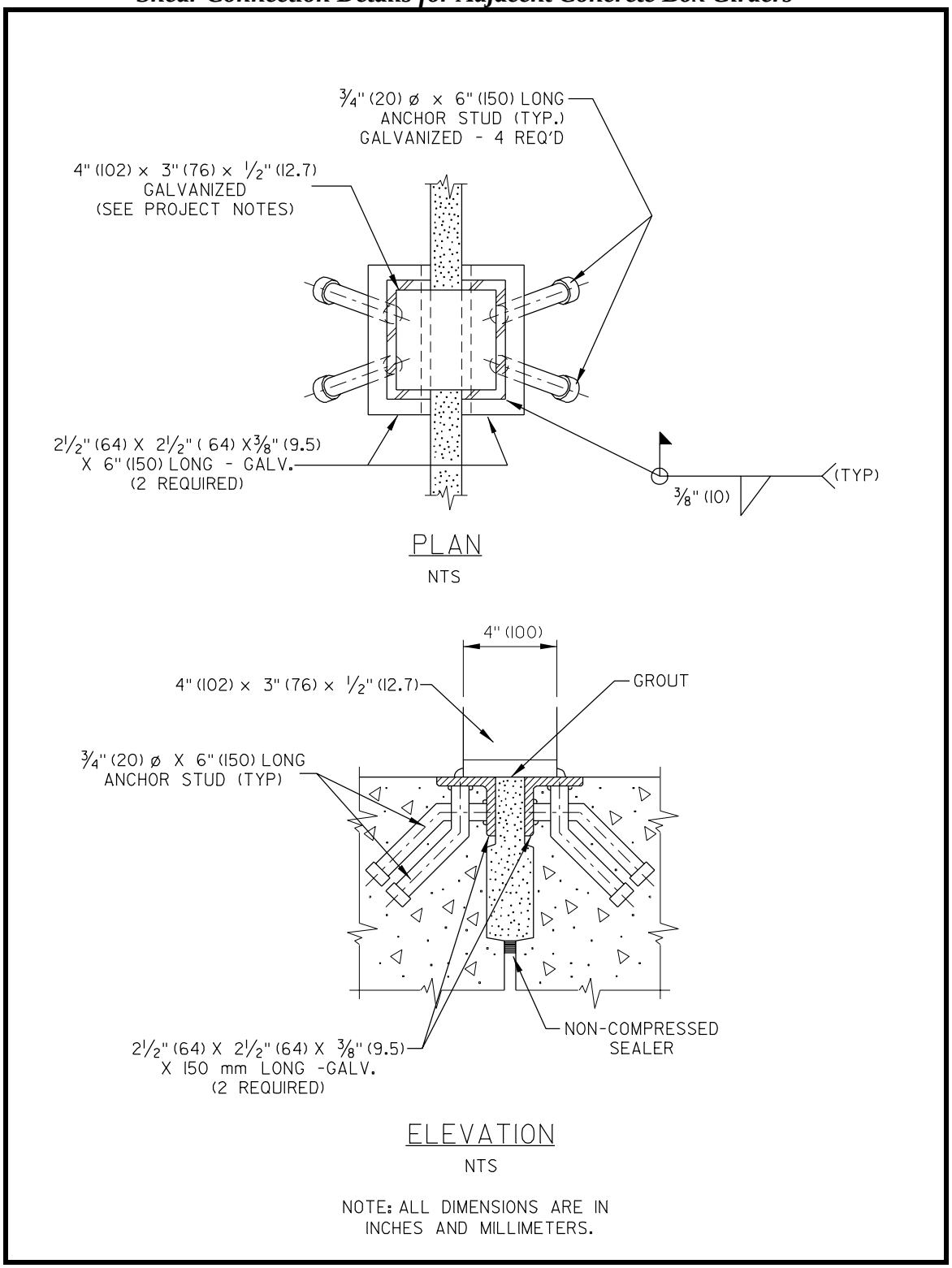

5.5.3.4 Continuity for Live Load

Concrete I-girders are designed as simple spans for dead load but as continuous beams for live load. Continuity is attained by designing additional reinforcing steel in the deck over beam joints for the negative moments and with monolithically poured reinforced diaphragms at the beam ends.

5.5.3.5 Diaphragms

The end diaphragms for each span on skewed bridges must also be skewed. Intermediate diaphragms are perpendicular to the beams. Diaphragms are poured and cured prior to pouring the deck. The minimum number of diaphragms is three per span: one at each end and one at midspan.

5.5.3.6 Strand Design

All prestressing strands for prestressed beams will be located inside the stirrups. See Section 5.10.3.3, Minimum Spacing of Prestressing Tendons and Ducts, in the *AASHTO Specifications*. The center of gravity of the strands should be shown on the plans.

5.5.3.7 Camber Diagram

Camber in prestressed beams is a function of prestressing and dead load, and needs to be verified in the field. A camber diagram must be included in the bridge plans. Figure 5-31 shows a typical camber diagram. Camber deflections should be computed for each beam at the midpoint of each span. The designer should furnish camber deflections for the following:

- The estimated prestress camber loss due to the dead load of the beam at the time of installation multiplied by a creep factor.
- The deflection due to dead load of the slab and parapet.
- The final net camber, which is the combination of the first two.

The above are theoretical values and may vary with actual concrete strength (age), various prestressing conditions, creep, and prestress loss. Creep of concrete is the time-dependent deformation of concrete under a sustained load. No creep factor is assumed in calculating dead load deflection for the slab and parapet. See Precast/Prestressed Concrete Institute's *Design Supplement to Precast Prestressed Concrete, Short Span Bridges, Spans to 100 Feet*.

In developing camber diagrams, the designer should consider the differences in loadings, such as the effects of sidewalks, parapets, and barriers, on individual beams and girders. The deflections caused by the dead load from the concrete girders, forms, and reinforced concrete deck are resisted by the concrete superstructure. Deflections caused by superimposed dead load are resisted by the composite section comprised of the reinforced concrete deck and the superstructure. The fascia beam likely will not deflect the same as interior beams. Consequently, a camber diagram must be provided for fascia beams as well as for interior beams. Because the screed rail for the deck finishing machine is set from the fascia beam, camber of the fascia beam is critical to achieve the correct deck elevations, the specified deck thickness and proper drainage.

Figure 5-31
Typical Camber Diagram for Concrete Beams

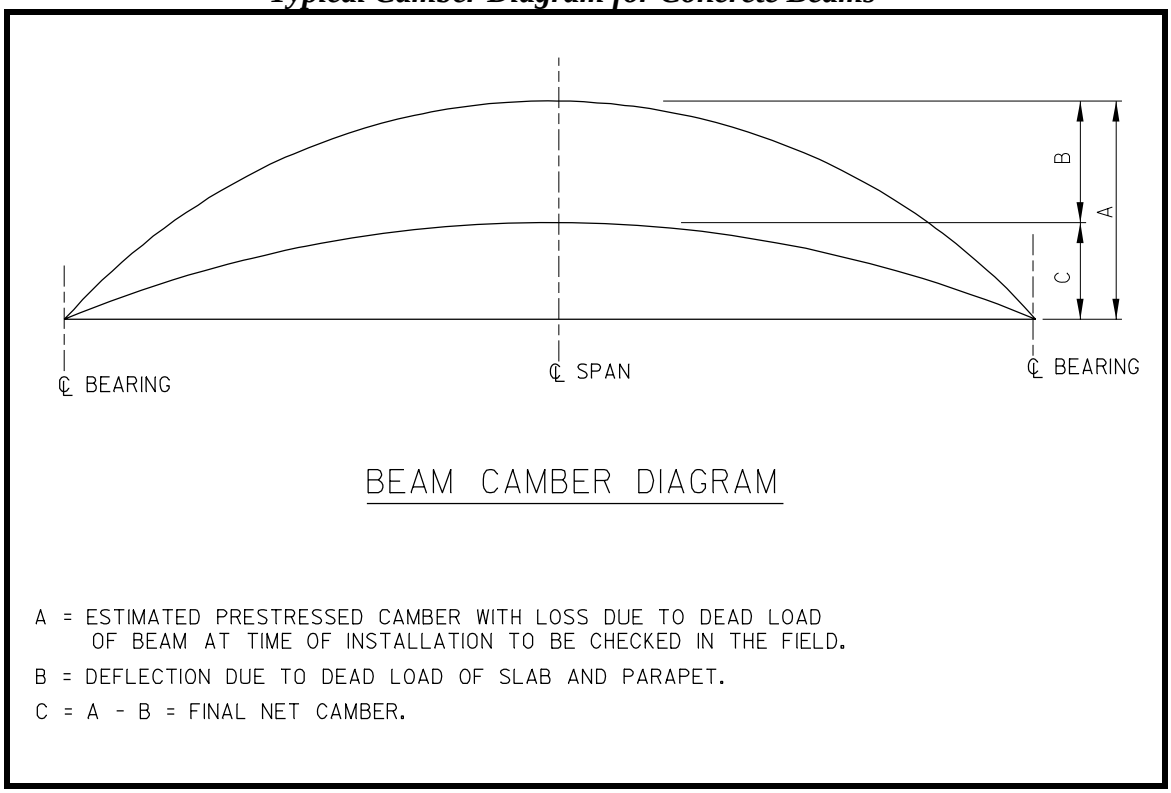

Because of the potential hazard from ponding and freezing of water on the deck, the designer must evaluate beam deflections, deck cross slope and roadway geometry as well as scupper locations to ensure that water drains properly.

5.6 BEARINGS

5.6.1 BEARING DEVICES

Bearing devices are designed to transmit loads from the superstructure to the substructure and to provide for expansion, contraction, and rotation of the superstructure. The devices must be able to withstand forces from several directions simultaneously. The bearings must also accommodate movements of the structure that result from loads, temperature change, deflection, impact and centrifugal force. The bearings should be designed to be easy to maintain with minimal maintenance. Consideration should also be given to the future need to jack girders to permit repair, lubrication, and maintenance of bearing devices.

There are two types of bearings: fixed and expansion. Some bearing materials can be used for either fixed or expansion bearings. The amount of movement that each type of bearing can provide must be considered in the selection. The types of bearings include:

- reinforced elastomeric pads,
- unreinforced elastomeric pads,
- steel sliding plate for expansion,
- steel plate for fixed bearing,
- high-load multi-rotational, and
- pot.

Refer to Section 14, Joints and Bearings, in the *AASHTO Specifications* for design requirements. Figure 5-32 provides notes for interpreting general information on bearings shown in Figures 5-33 through 5-38.

Reinforced elastomeric bearings are a combination of materials that may include reinforced fiber mesh, steel and neoprene. They require the least maintenance but are susceptible to deterioration from ozone and ultraviolet light. Reinforced elastomeric bearings are suitable for movements up to 2.5 in [65 mm]. Reinforced elastomeric bearings should be considered over other types of bearings in the majority of cases. See Figure 5-33.

Elastomeric pads are unreinforced single material bearing pads. They are used at fixed ends of voided slab and concrete box girder structures. See Figure 5-34.

Steel sliding plate bearings (expansion) may be a combination of steel plate, polished stainless steel sheet, polytetrafluoroethelyene (TFE), and urethane. Steel sliding plate bearings are suitable for movements up to 2 in [50 mm]. These bearings are less vulnerable to environmental deterioration than elastomeric bearings. Longitudinal movement is accommodated by either two polished surfaces sliding on each other or the stainless steel sliding on the TFE surface. Rotation is provided by the curved surfaces sliding on each other or by deformation of the urethane pad on TFE bearings. See Figure 5-35.

Fixed steel plate bearings anchor the span and provide for rotation of the fixed end of the beam. Rotation is provided by the curved surfaces sliding on each other. See Figure 5-36. The height of the fixed bearing assembly can be designed to accommodate various bearing seat and beam requirements.

Rotational bearings are made with matching machined steel concave and convex surfaces. Rotational bearings may be either fixed or expansion. Rotation is accommodated at the matched concave and convex surfaces. Longitudinal movement for the expansion bearing is provided by sliding of the concave plate against the sole plate of the beam. They require a minimum of maintenance. Rotational expansion bearings are suitable for movements up to 2.5 in [65 mm]. See Figure 5-37.

Pot bearings are high-load multi-rotational bearings. The basic rotational bearing can be combined with a TFE and stainless steel sheet to allow translation. The direction of translation can be controlled using guide bars. Pot bearings consist of a piston and pot arrangement similar to a hydraulic cylinder in which elastomer is used to accommodate the rotational deformation. Inherent problems with this type of bearing include leakage of the elastomer and failure of the seal rings. See Figure 5-38.

Rocker bearings (which are not used by the Department) are mechanical-type bearings which can accommodate translation and rotation in only one direction. Rocker bearings are not used by the Department because of their increased seismic vulnerability and high maintenance requirements.

Figure 5-32a
Notes for Bearings

GENERAL NOTES FOR ALL BEARINGS

1. Design is based on AASHTO M183 (ASTM A36) steel stresses.
2. T1, T3, Ts, Tb and y are measured at centerline of bearing at 70°F (21°C).
3. Fill slots and holes in masonry plate around anchor bolts with an approved non-hardening caulking compound or elastic joint sealer.
4. Steel surfaces of sole plate, rocker plate, web, and bearing plate to be a machine finish as shown in the details, measured in accordance with ANSI B46.1. Other steel plate surfaces to be finished to at least 1 in [25 mm].
5. Bearing details are satisfactory for the E. Q. requirement for Zone 1.
6. Bearings shall be shop assembled and match marked to ensure proper fit, if uplift is present.
7. Anchor bolts, where required, shall meet the requirements of AASHTO M183, and shall have hex nuts and washers. When an anchor bolt goes though the sole plate, the nut is to be 0.25 in [6 mm] clear. Burr threads at face of nut.
8. Anchor bolts shall be swedged and may be cast in place or grouted in preformed (sleeved or drilled) holes.
9. Sole plates are to be beveled or have radii machined to match grade when grade exceeds 3 percent for low-profile fixed bearings or 1 percent for all other bearings.
10. Steel plates shall meet a flatness requirement of 0.5 percent in the direction being measured (width, length, and diagonals) maximum, but not to exceed 1/8 in [3 mm].
11. For painted structures, metal bearings shall be coated with one shop coat of paint in accordance with project requirements.
12. A leveling pad shall be placed under the masonry plate where required by the contract.

NOTES FOR EXPANSION BEARINGS — FIGURE 5-35

13. Δ = the total longitudinal movement the bearing can take. If calculated movement exceeds the limit shown, plate widths may be increased or the next higher capacity bearing may be substituted.
14. Surfaces of sole plates and masonry plates in contact with bronze plates are to have a machined finish of at least 1/8 in [3 mm]. These steel surfaces shall be coated with a multipurpose grease before shipment—not painted. The coating shall be removed with a solvent immediately prior to erection.

Figure 5-32b
Notes for Bearings

15. Self-lubricating bronze bearing plates shall conform to the requirements of ASTM B22, copper alloy UNS C90500 modified with up to 2V2 percent lead maximum. The sliding surfaces of the plates shall be provided with annular grooves or cylinder recesses or a combination thereof, which will be filled with a lubricating compound. The lubricating compound shall be compressed into the recesses under sufficient pressure to form a nonplastic lubricating inset. The lubricating inset shall comprise not less than 25 percent of the total area of the plate. The frictional coefficient shall not exceed 0.1, when the bearing is tested under a load of R and for 1,000 cycles. The compound shall be free of any material that could cause abrasive or corrosive action upon the metal surfaces and also shall be able to withstand extremely high pressures and the atmospheric elements over long periods of time.

    All items shall be the standard products of the manufacturer of such materials for this application.

    Prior to assembly in place, the steel surface which will bear on the self-lubricating bearing plate shall be thoroughly lubricated with additional antioxidant lubricant furnished by the manufacturer.

Figure 5-33a
Elastomeric Bearing Details

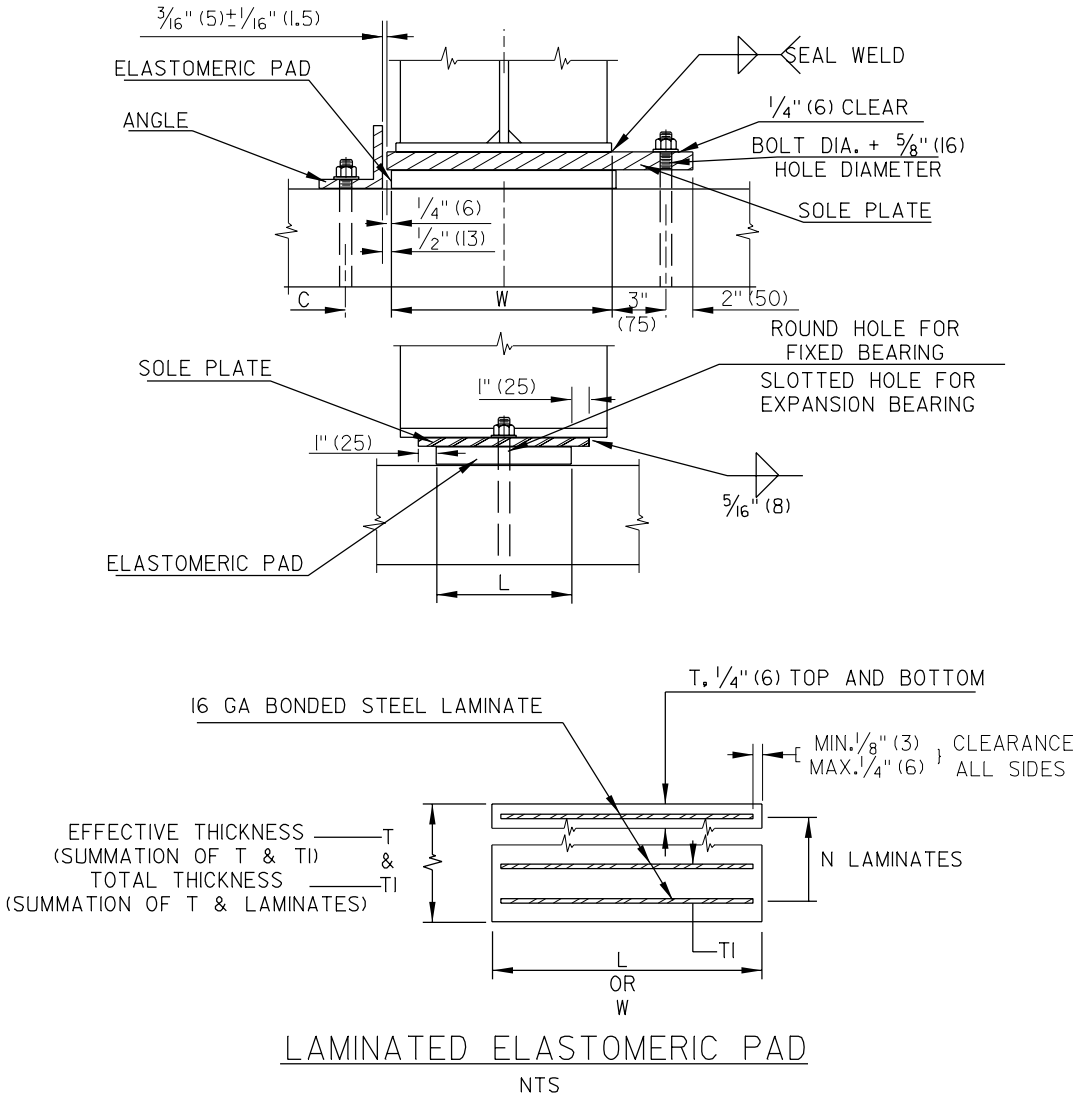

LAMINATED ELASTOMERIC PAD

NTS

NOTE: ALL DIMENSIONS ARE IN INCHES (MILLIMETERS).

Figure 5-33b
Elastomeric Bearing Details

TYPE	SPAN FT.	R TONS	W"	L"	t"	N	T"	△ "	T1"	C "	D "	SIZE OF ANGLE
SIMPLE SPAN	20	50	10	12	1/2	0	1/2	1/4	1/2	2 1/4	1	3 x 3 x 1/2 x 6
SIMPLE SPAN	30	60	10	8	1/2	2	1	1/2	1 1/4	2 1/4	1	3 x 3 x 1/2 x 6
SIMPLE SPAN	70	100	12	10	1/2	4	2	1	2 1/2	2 7/8	1 1/4	4 x 4 x 3/8 x 8
3 SPAN CONT.	70	140	12	12	1/2	4	2	1	2 1/2	2 7/8	1 1/4	4 x 4 x 3/8 x 8
3 SPAN CONT.	90	180	14	15	1/2	5	2 1/2	1 1/4	3 1/8	2 7/8	1 1/4	6 x 4 x 3/4 x 10
3 SPAN CONT.	100	220	14	16	1/2	5	2 1/2	1 1/4	3 1/8	2 7/8	1 1/4	6 x 4 x 3/4 x 10
3 SPAN CONT.	120	260	16	19	1/2	6	3	1 1/2	3 1/2	3 7/8	1 1/2	6 x 6 x 3/4 x 12
3 SPAN CONT.	140	300	16	22	1/2	7	3 1/2	1 3/4	4 3/8	4	1 1/2	8 x 6 x 1 x 14
3 SPAN CONT.	160	340	18	22	1/2	8	4	2	5	4	1 1/2	8 x 6 x 1 x 14
3 SPAN CONT.	200	400	20	25	1/2	10	5	2 1/2	6 1/4	4	1 1/2	8 x 6 x 1 x 16

ENGLISH

TYPE	SPAN (m)	R (kN)	W (mm)	L (mm)	t (mm)	N	T (mm)	△ (mm)	T1 (mm)	C (mm)	D (mm)	SIZE OF ANGLE
SIMPLE SPAN	6	220	254	305	13	0	13	6	13	57	25	76x76x12.7x152
SIMPLE SPAN	9	265	254	203	13	2	25	13	32	57	25	76x76x12.7x152
SIMPLE SPAN	21	445	305	254	13	4	51	25	64	730	32	76x76x12.7x203
3 SPAN CONT.	21	625	356	305	13	4	51	25	64	730	32	76x76x12.7x203
3 SPAN CONT.	27	800	356	381	13	5	64	32	79	730	32	76x76x12.7x254
3 SPAN CONT.	30	980	406	406	13	5	64	32	79	730	32	76x76x12.7x254
3 SPAN CONT.	37	1155	406	483	13	6	76	38	95	984	38	76x76x12.7x305
3 SPAN CONT.	43	1335	457	559	13	7	89	44	111	1016	38	76x76x12.7x356
3 SPAN CONT.	49	1510	457	559	13	8	102	51	127	1016	38	76x76x12.7x356
3 SPAN CONT.	61	1780	508	635	13	10	127	64	159	1016	38	76x76x12.7x406

METRIC

NOTE: THIS TABLE SHALL ONLY BE USED FOR PRELIMINARY SIZING. ACTUAL DESIGN SHALL BE IN ACCORDANCE WITH AASHTO SPECIFICATIONS.

Figure 5-34
Neoprene Bearing Details

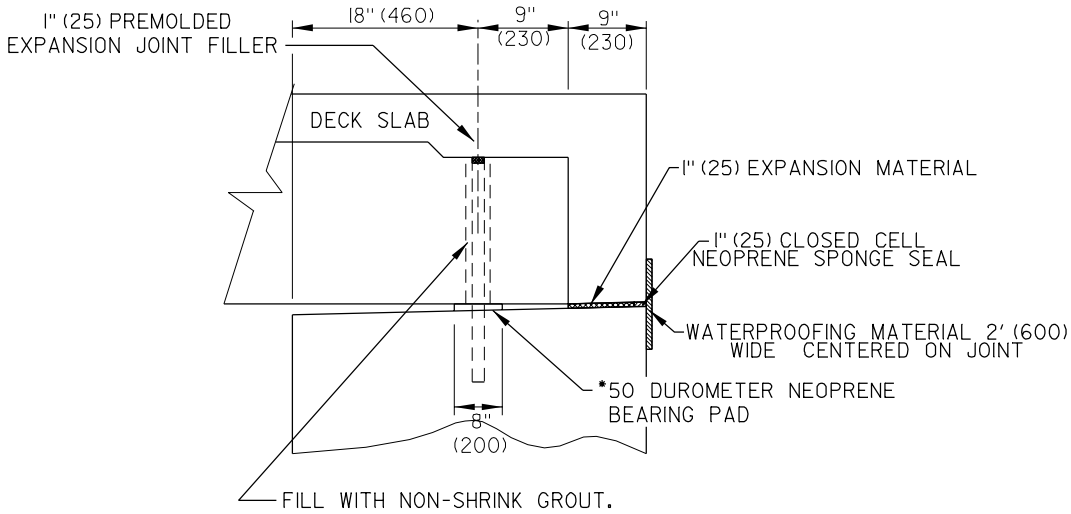

SECTION A-A
NTS

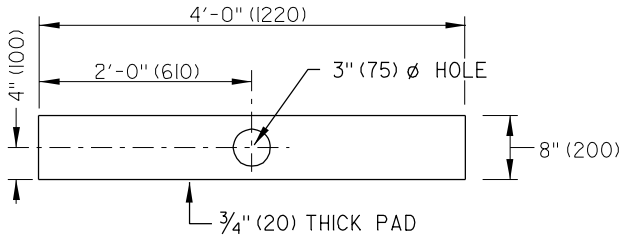

* 50 DUROMETER
NEOPRENE BEARING PAD
NTS

NOTE: ALL DIMENSIONS ARE IN FEET & INCHES (MILLIMETERS).

Figure 5-35a
Steel Bearings – Expansion (U.S. Customary)

FIXED BEARING

REACTIONS (R) - UP TO 400 k

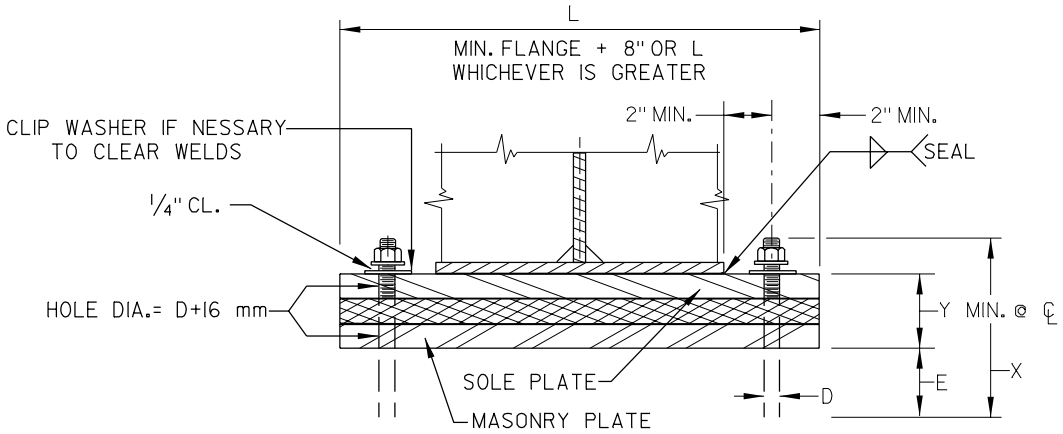

KIPS	INCHES						
R	L	W	T	D	=E	X	Y
140	20	8	1½	1¼	12	18	3
180	22	9	1¾	1¼	12	18	3¼
220	24	10	2	1½	15	22	3½
260	26	10	2	1½	15	22	3½
300	28	11	2¼	1½	15	22	3¾
340	30	12	2½	1½	15	22	4
400	32	13	2½	1½	15	22	4

NOTE:
SEE FIGURE 5-29

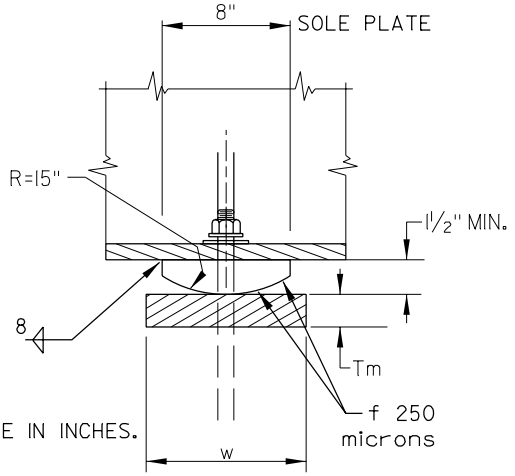

NOTE: ALL DIMENSIONS ARE IN INCHES.

Figure 5-35b
Steel Bearings – Expansion [Metric]

FIXED BEARING

REACTIONS (R) - UP TO 1780 kN

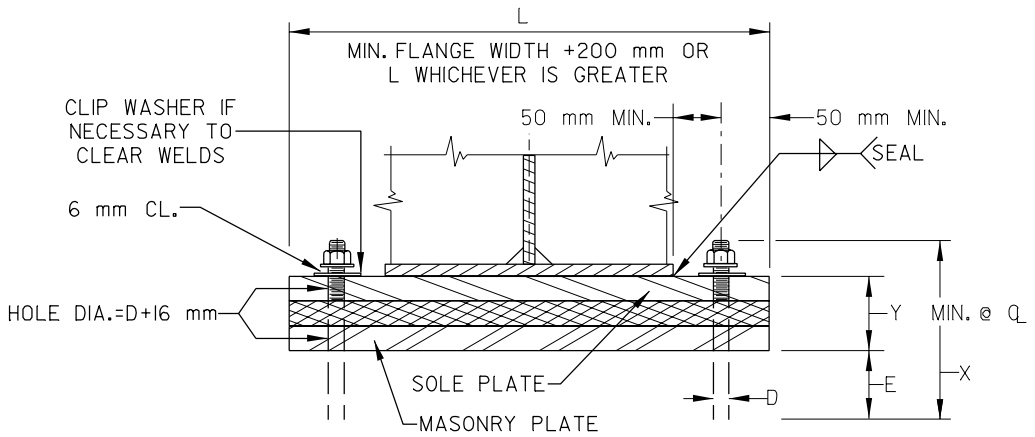

R kN	L mm	W mm	Tm	D mm	E mm	X mm	Y mm
620	508	203	38	32	305	457	76
800	559	229	44	32	305	457	83
980	610	254	51	38	381	559	89
1155	660	254	51	38	381	559	89
1335	711	279	57	38	381	59	95
1510	762	305	64	38	381	559	102
1780	813	330	64	38	381	559	102

NOTE:
SEE FIGURE 5-29

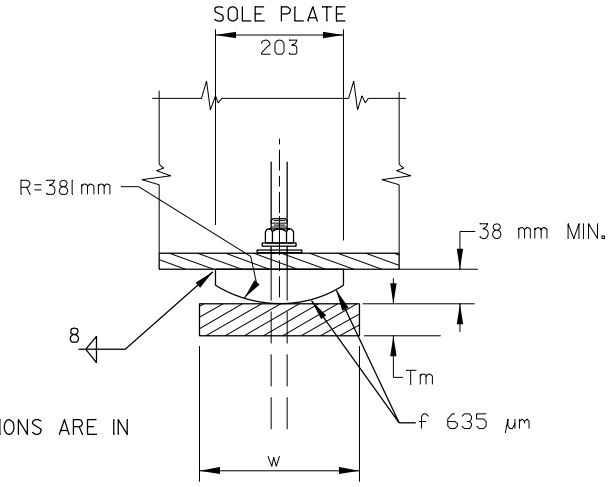

NOTE: ALL DIMENSIONS ARE IN
MILLIMETERS.

Figure 5-36a
Steel Bearings – Fixed (U.S. Customary)

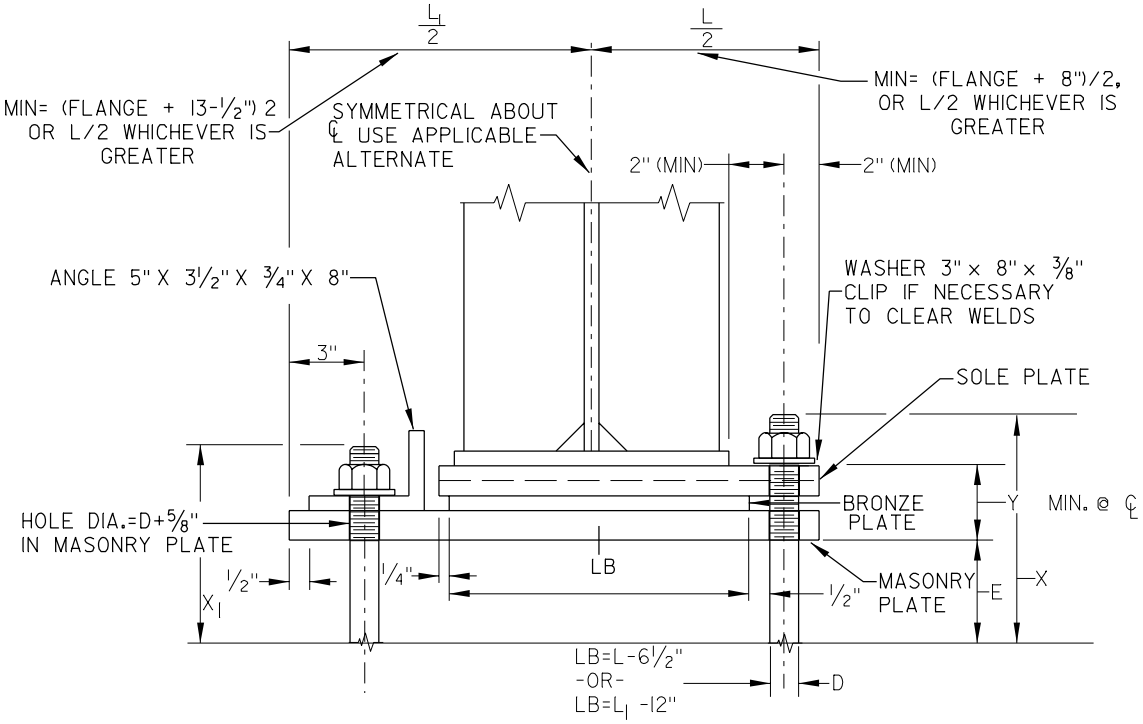

ANCHOR BOLTS THROUGH SOLE PLATES ARE ONLY NECESSARY WHEN UPLIFT COULD OCCUR. WHEN BOLTS PASS THROUGH SOLE PLATES, EXTREME CARE SHALL BE EXERCISED IN PROPERLY INSTALLING ANCHOR BOLTS.

KIPS	INCHES												
R	L	W	Wd	Ts	Tm	Tb	D	E	X	Y	△	L_1	X_1
120	20	10	8	1	2	1½	1¼	12	18¾	4¼	1	25½	17¼
180	22	12	9½	2	2¼	1½	1¼	12	19	4½	1	27½	17½
220	24	12½	10	2¼	2½	1¾	1½	15	22½	5	1½	29½	20¾
260	26	13½	11	2½	2½	2	1½	15	22¾	5¼	1½	31½	20¾
300	28	4	11	2½	2¾	2	1½	15	23	5½	2	33½	21
340	30	14½	11½	2¾	2¾	2	1½	15	23	5½	2	35½	21
400	32	15½	12½	3	3	2¼	1½	15	23½	6	2	37½	21¼

NOTE:
SEE FIGURE 5-29

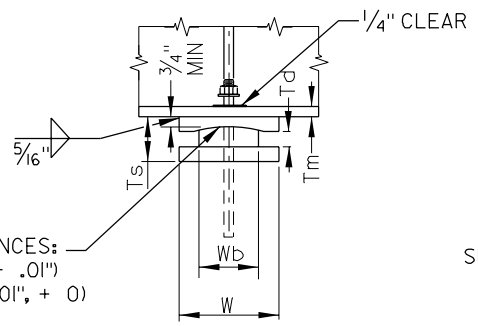

15" RADIUS TOLERANCES:
SOLE PLATE (-0 + .01")
BRONZE PLATE (-.01", + 0)

NOTE: ALL DIMENSIONS ARE IN INCHES.

R L

SLOTTED HOLE IN SOLE PLATE MAY BE DRILLED OR MACHINE BURNED.

SLOTS IN THE SOLE PLATE ARE:
1-7/8" X 2-7/8" FOR △ = 1"
2-1/8" X 3-5/8" FOR △ = 1"
2-1/8" X 4-1/8" FOR △ = 1-1/2"

Figure 5-36b
Steel Bearings – Fixed [Metric]

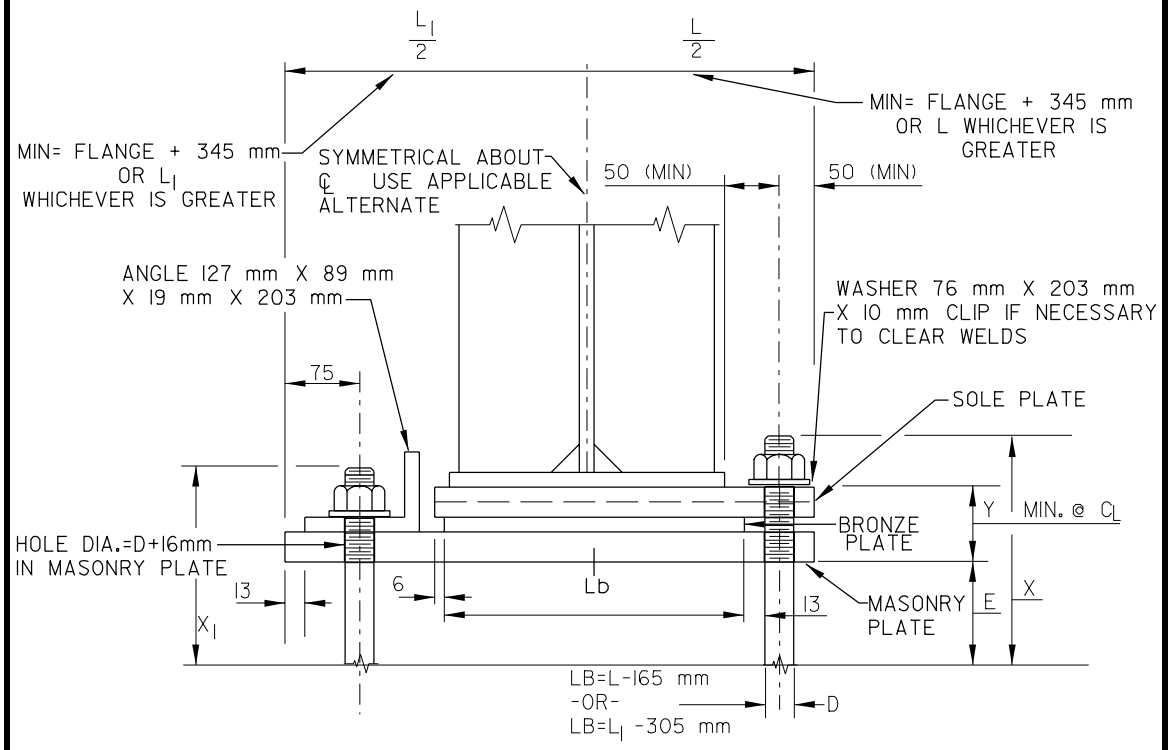

ANCHOR BOLTS THROUGH SOLE PLATES ARE ONLY NECESSARY WHEN UPLIFT COULD OCCUR. WHEN BOLTS PASS THROUGH SOLE PLATES, EXTREME CARE SHALL BE EXERCISED IN PROPERLY LOCATING ANCHOR BOLTS.

kN	mm												
R	L	W	Wd	Ts	Tm	Tb	D	E	X	Y	△	l_1	X_1
535	508	254	203	44	51	38	32	305	476	108	25	647	438
800	559	305	241	51	57	38	32	305	483	114	25	700	444
980	610	267	254	57	63	44	38	381	572	127	38	750	527
1150	660	343	280	63	63	51	38	381	578	133	38	800	527
1335	711	356	280	63	70	51	38	381	584	139	51	851	533
1510	762	419	292	70	70	51	38	381	584	139	51	902	533
1780	914	394	317	76	76	57	38	381	597	152	51	953	540

NOTE:
SEE FIGURE 5-29

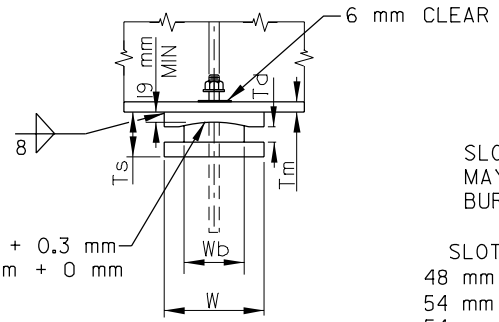

381mm RADIUS TOLERANCES:
SOLE PLATE 381mm -0 mm + 0.3 mm
BRONZE PLATE 381mm -3 mm + 0 mm

SLOTTED HOLE IN SOLE PLATE MAY BE DRILLED OR MACHINE BURNED.

SLOTS IN THE SOLE PLATE ARE:
48 mm X 73 mm FOR △ = 25 mm
54 mm X 92 mm FOR △ = 38 mm
54 mm X 105 mm FOR △ = 51mm

NOTE: ALL DIMENSIONS ARE IN MILLIMETERS.

Figure 5-37a
Expansion High-Load Multi-Rotational Bearing Detail Example

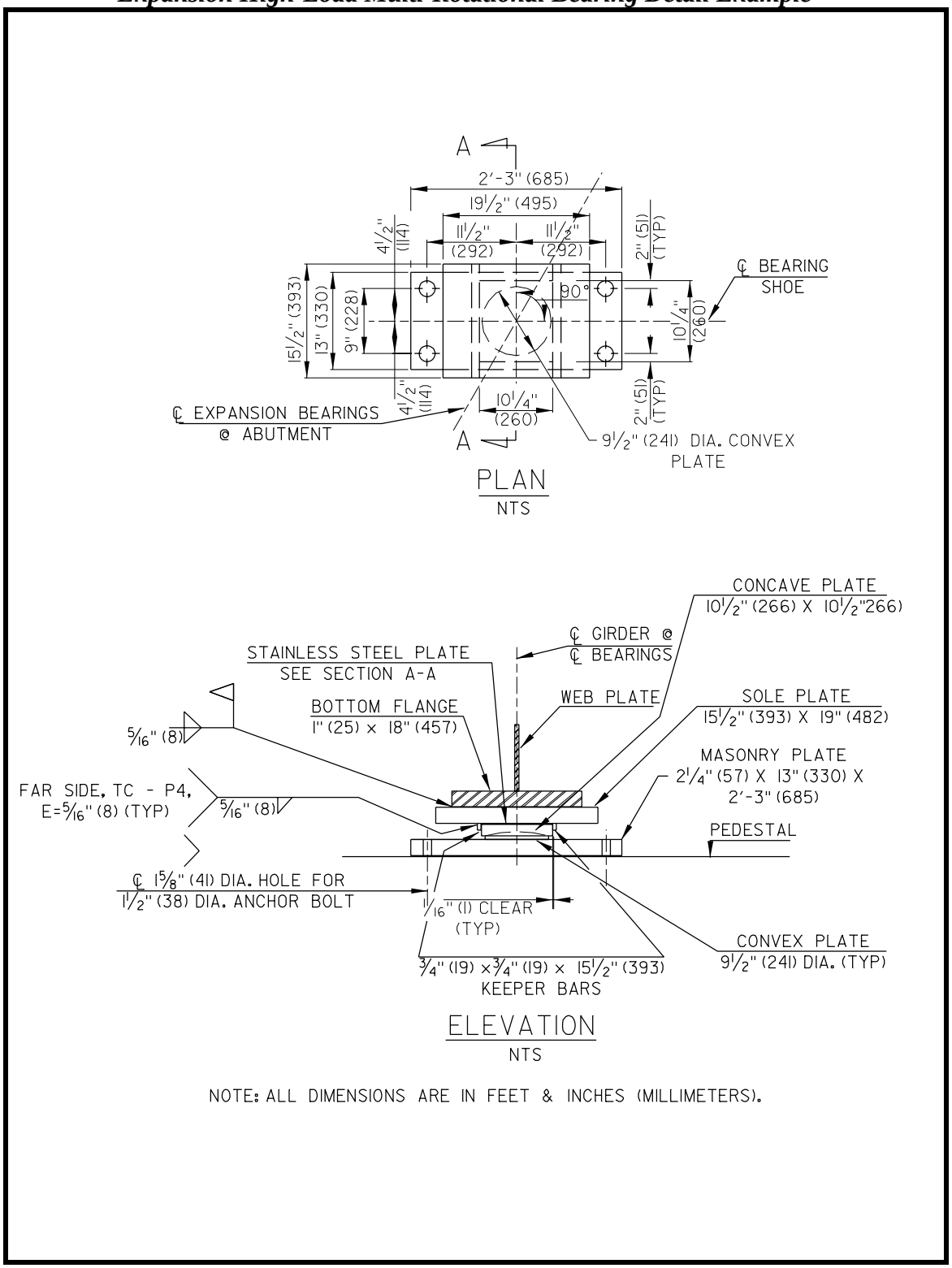

Figure 5-37b
Expansion High-Load Multi-Rotational Bearing Detail Example

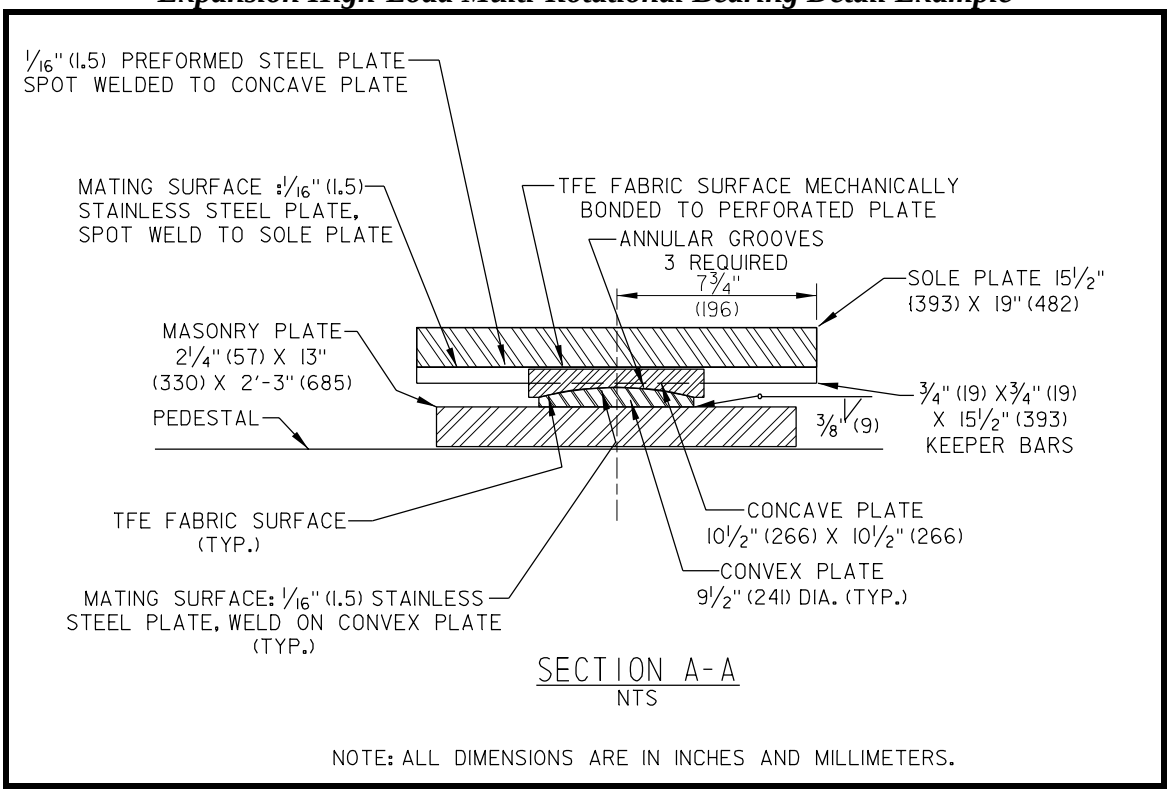

Figure 5-37c
Fixed High-Load Multi-Rotational Bearing Detail Example

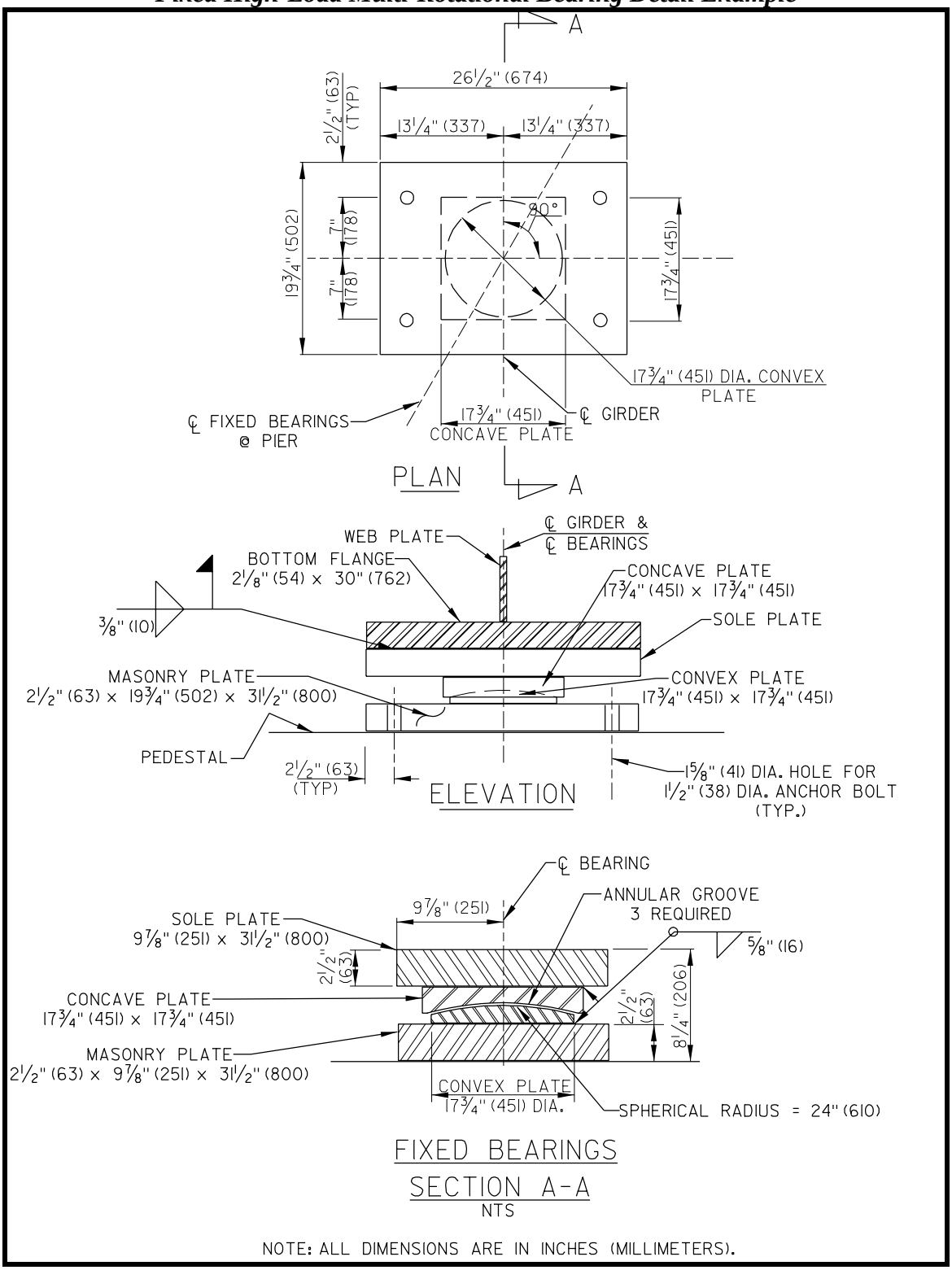

Figure 5-37d
High-Load Multi-Rotational Bearing Detail Example

BEARING NOTES:

1. BEARINGS SHALL PERMIT A ROTATION OF 2 DEGREES IN ALL DIRECTIONS.
2. STEEL FOR THE MASONRY PLATE, SOLE PLATE, CONVEX PLATE, AND CONCAVE PLATE SHALL MEET THE REQUIREMENTS OF AASHTO DESIGNATION M270, GRADE 50 (345). STEEL SURFACES NOT IN CONTACT WITH ONE ANOTHER OR WITH TFE FABRIC SURFACE SHALL BE PAINTED.

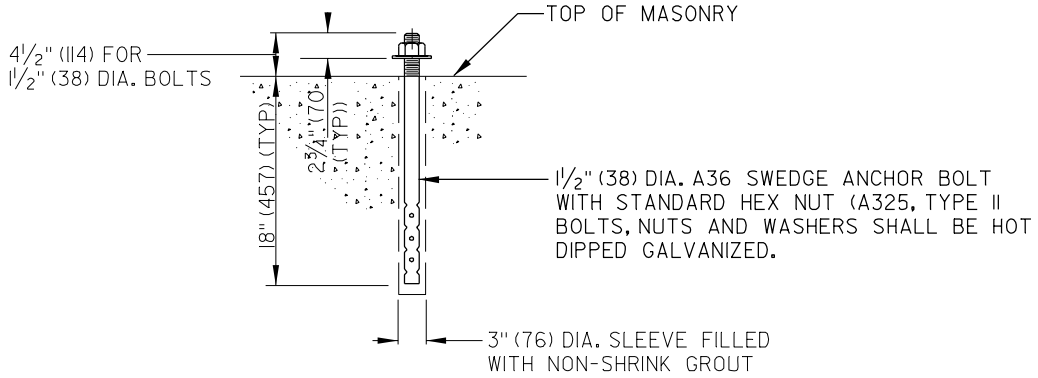

ANCHOR BOLT DETAIL
NTS

NOTE: ALL DIMENSIONS ARE IN INCHES AND MILLIMETERS.

Figure 5-38
Pot Bearing Details

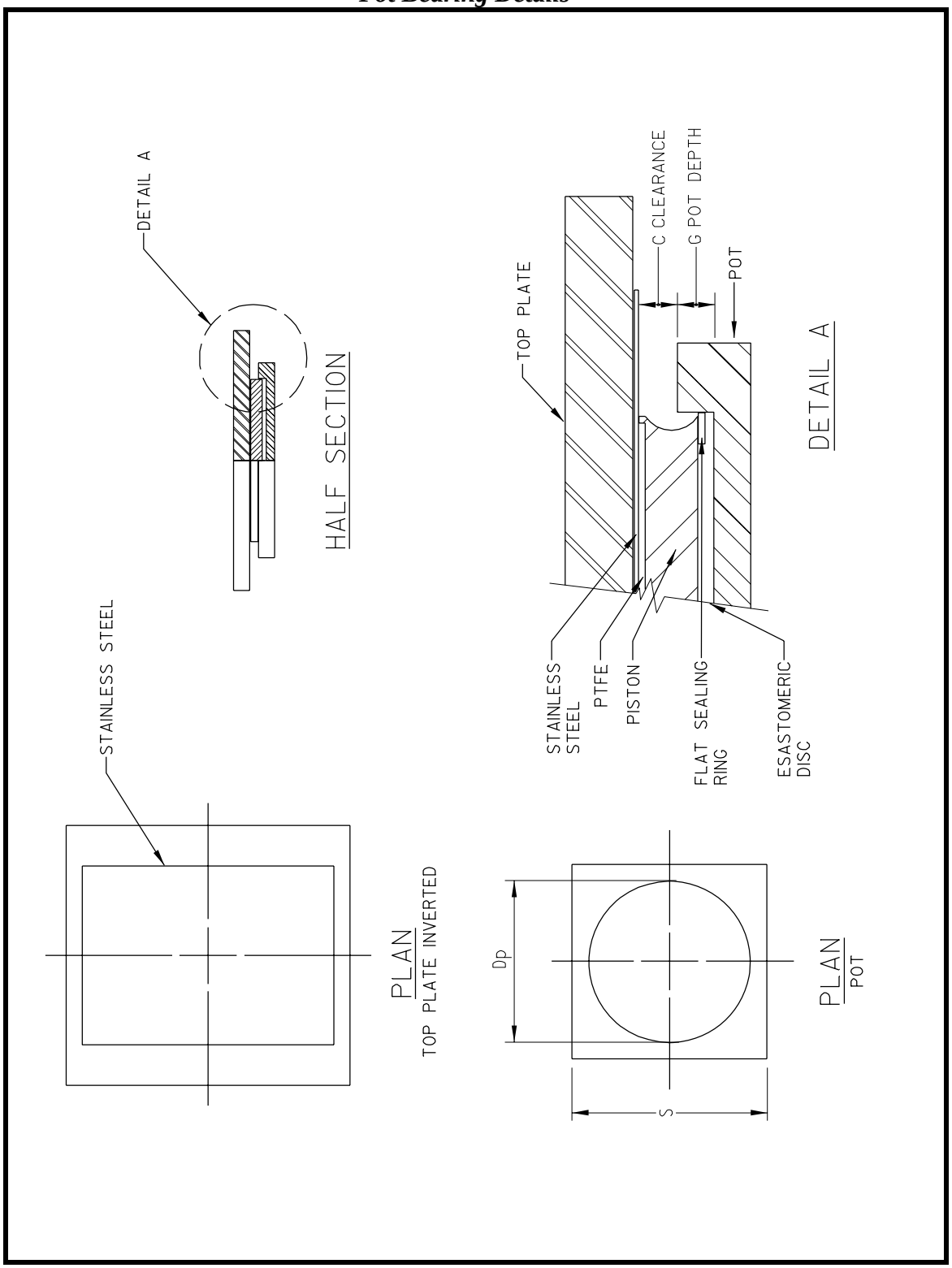

For pot or rotational bearing design, refer to FHWA *Mid-Atlantic States SCEF Standard 106, High Load Multi-Rotational Bearings*. The design requirements for bearings are the same for either steel or concrete beams.

For anchor bolt design, refer to Section 14.8.3, Anchorage and Anchor Bolts, in the *AASHTO Specifications*. Anchor bolts must meet seismic requirements.

5.6.2 SEISMIC PROVISIONS

The United States is divided into four Seismic Performance Zones (SPZ) (1 through 4) based on the acceleration coefficient and the importance category. Areas in SPZ "1" are the least likely to experience earthquakes. Refer to Section 3.10, Earthquake Effects, and Section 4.7.4, Analysis for Earthquake Loads, in the *AASHTO Specifications*. Seismic provisions apply to the connections between the superstructure and substructure.

All of Delaware is in either SPZ "1" or "2." The boundary is Route 273. All bridges on, over or north of Route 273 belong to SPZ "2."

The design requirements for SPZ "1" are given in Section 3.10.9.2, Seismic Zone 1, in the *AASHTO Specifications*. The design requirements for SPZ "2" are more complex and are given in Section 3.10.9.3, Seismic Zone 2, in the *AASHTO Specifications.*

5.7 SLAB BRIDGES

Generally, slab bridge designs are not used for new bridges. They should be considered for locations where other bridge types cannot meet the required vertical clearance.

5.7.1 MATERIALS

All concrete for precast slab bridge decks will meet f'_c equals 5,000 psi [35 MPa]. All other concrete will meet f'_c equals 4,500 psi [30 MPa]. Higher strength concrete may be considered with approval by the Bridge Design Engineer.

Reinforcing steel meeting the requirements for AASHTO M31, Grade 60 [M31M, Grade 420], shall be specified. The minimum size of reinforcing bar is #5 [16] bar.

All reinforcing steel shall be protected with fusion-bonded epoxy. Epoxy coating conforming with AASHTO M284 [M284M] shall be specified.

5.7.2 DESIGN

Refer to Section 3, Loads and Load Factors, and Section 5, Concrete Structures, in the *AASHTO Specifications* for design requirements.

Usually, slab bridges are used for short spans, 20 feet [6 m] or less. No provisions for expansion or contraction are needed for one-span slab bridges. Provisions for expansion and contraction are required for simple and continuous, multi-span structures.

Voided slabs may be used where reduced superstructure weight is needed. Drains must be provided for each void.

5.7.3 THICKNESS

The minimum thickness of concrete for slab bridge decks is 10 in [250 mm].

5.7.4 CONCRETE COVER

The minimum cover over the rebar is:

- Top—2.5 in [65 mm], including a 0.5 inch [15 mm] integral wearing surface;
- Bottom—2 in [50 mm].

5.8 APPROACH SLABS

Generally, fill placed behind abutments settles after the bridge is opened to traffic. For this reason, the Department's policy is to construct reinforced concrete approach slabs to span the fill area in the following cases:

- all interstate routes and freeways; and
- other high-volume, high-speed routes.

Approach slabs are not normally used on low-volume, low-speed roads. Settlement of approach roadway embankments may also be addressed by methods covered in Section 6.7.

5.8.1 MATERIALS

All concrete for approach slabs shall be Class D and meet f'_c equals 4,500 psi [30 MPa].

Reinforcing steel meeting the requirements for AASHTO M31, Grade 60 [M31M, Grade 420], shall be specified. The minimum size of reinforcing bar is #5 [16] bar.

All reinforcing steel shall be protected with fusion-bonded epoxy. Epoxy coating conforming with AASHTO M284 [M284M] shall be specified.

5.8.2 DESIGN

Refer to Section 5, Concrete Structures, in the *AASHTO Specifications* for design criteria. Approach slabs are designed as simple spans, assuming no support from the abutment backfill. The length of approach slabs varies depending on the height of the abutments. The span length used for design of the approach slab is determined as shown in Figure 5-39.

Refer to Section 5.14.4, Slab Superstructures, *AASHTO Specifications,* for design of edge beams for approach slabs. More refined methods of analysis may be used for approach slab design as approved by the Bridge Design Engineer.

5.8.3 THICKNESS

The slab thickness will be determined by the design. There is no minimum thickness.

5.8.4 CONCRETE COVER

The minimum concrete cover over reinforcing steel in approach slabs is:

- Top — 2.5 in [65 mm], and
- Bottom — 3 in [75 mm], as with other unformed concrete in contact with the ground.

Figure 5-39a
Approach Slab Design Details

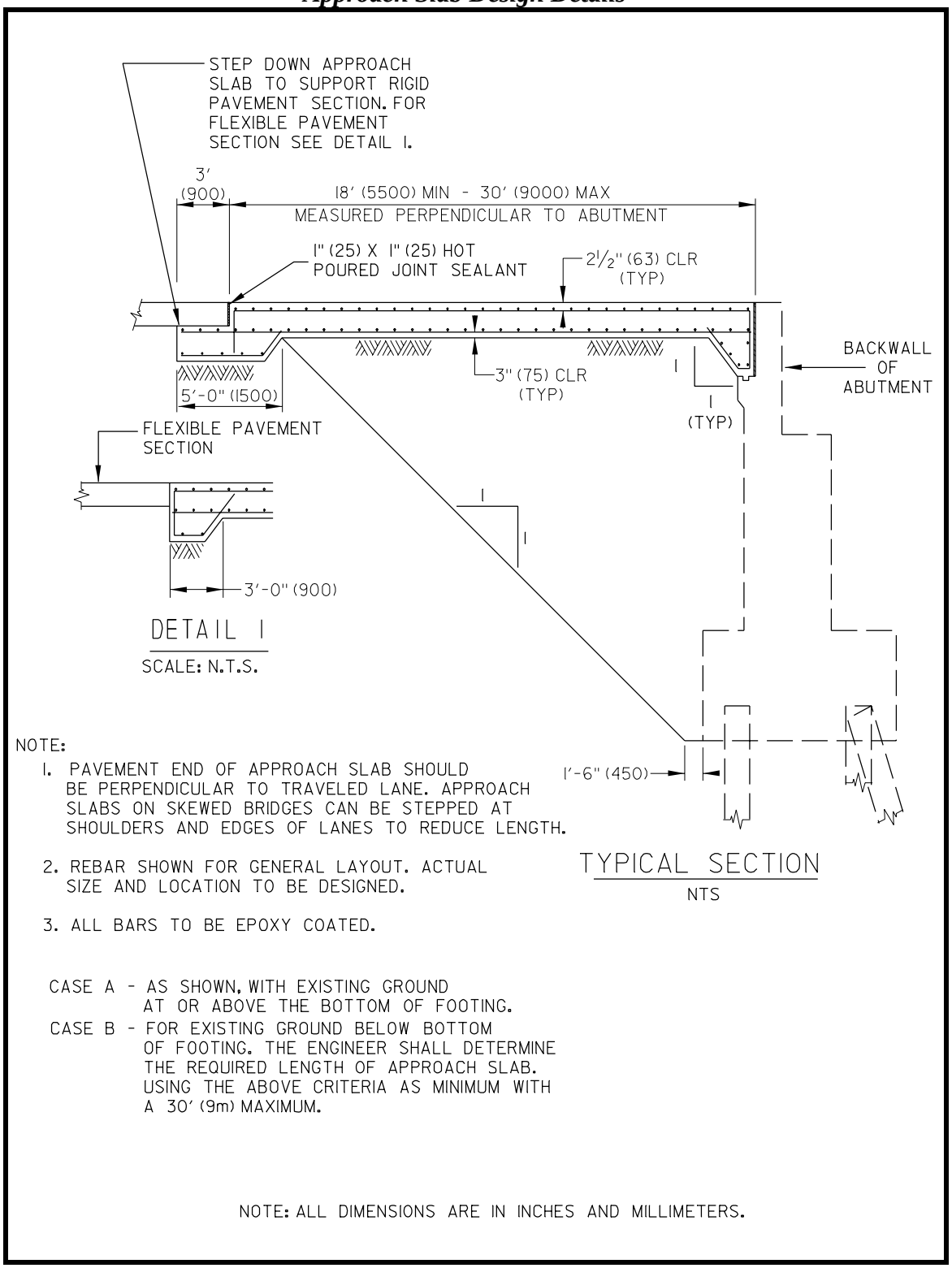

NOTE:

1. PAVEMENT END OF APPROACH SLAB SHOULD BE PERPENDICULAR TO TRAVELED LANE. APPROACH SLABS ON SKEWED BRIDGES CAN BE STEPPED AT SHOULDERS AND EDGES OF LANES TO REDUCE LENGTH.
2. REBAR SHOWN FOR GENERAL LAYOUT. ACTUAL SIZE AND LOCATION TO BE DESIGNED.
3. ALL BARS TO BE EPOXY COATED.

CASE A - AS SHOWN, WITH EXISTING GROUND AT OR ABOVE THE BOTTOM OF FOOTING.

CASE B - FOR EXISTING GROUND BELOW BOTTOM OF FOOTING. THE ENGINEER SHALL DETERMINE THE REQUIRED LENGTH OF APPROACH SLAB. USING THE ABOVE CRITERIA AS MINIMUM WITH A 30' (9m) MAXIMUM.

NOTE: ALL DIMENSIONS ARE IN INCHES AND MILLIMETERS.

Figure 5-39b
Approach Slab Design Details

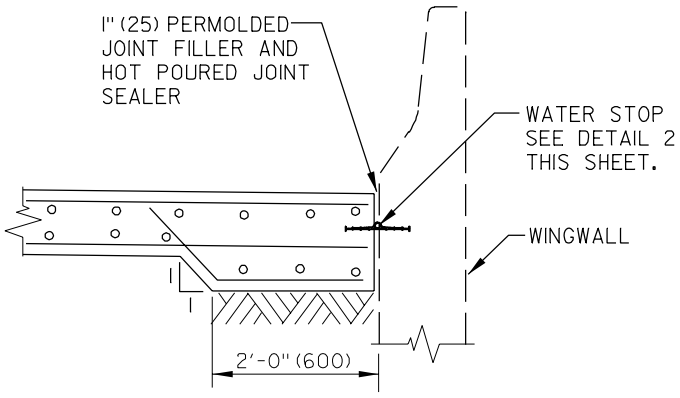

DETAIL OF APPROACH SLAB AT WINGWALL
NTS

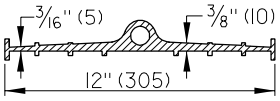

P. V. C. WATER STOP
DETAIL 2
NTS

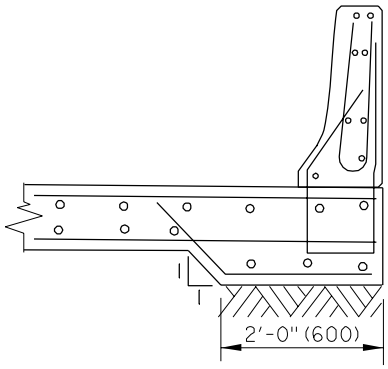

DETAIL OF APROACH SLAB IN MEDIAN OF DUAL STRUCTURES
NTS

NOTE:
1. REBAR SHOWN FOR GENERAL LAYOUT. ACTUAL SIZE AND LOCATION TO BE DESIGNED.
2. ALL BARS TO BE EPOXY COATED.
3. CONSTRUCTION JOINT IS TO BE USED ON STEPPED APPROACH SLABS. SEE NOTE 1 ON PREVIOUS PAGE.

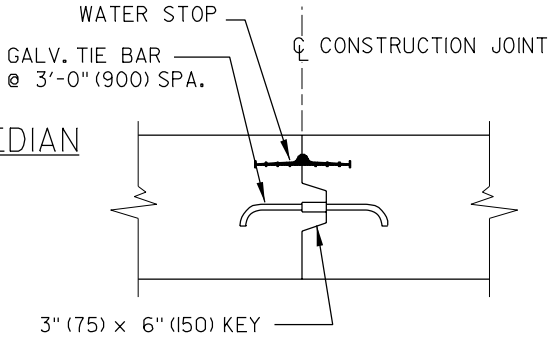

CONSTRUCTION JOINT
NTS

NOTE: ALL DIMENSIONS ARE IN INCHES AND MILLIMETERS.

Figure 5-39c
Approach Slab Design Details

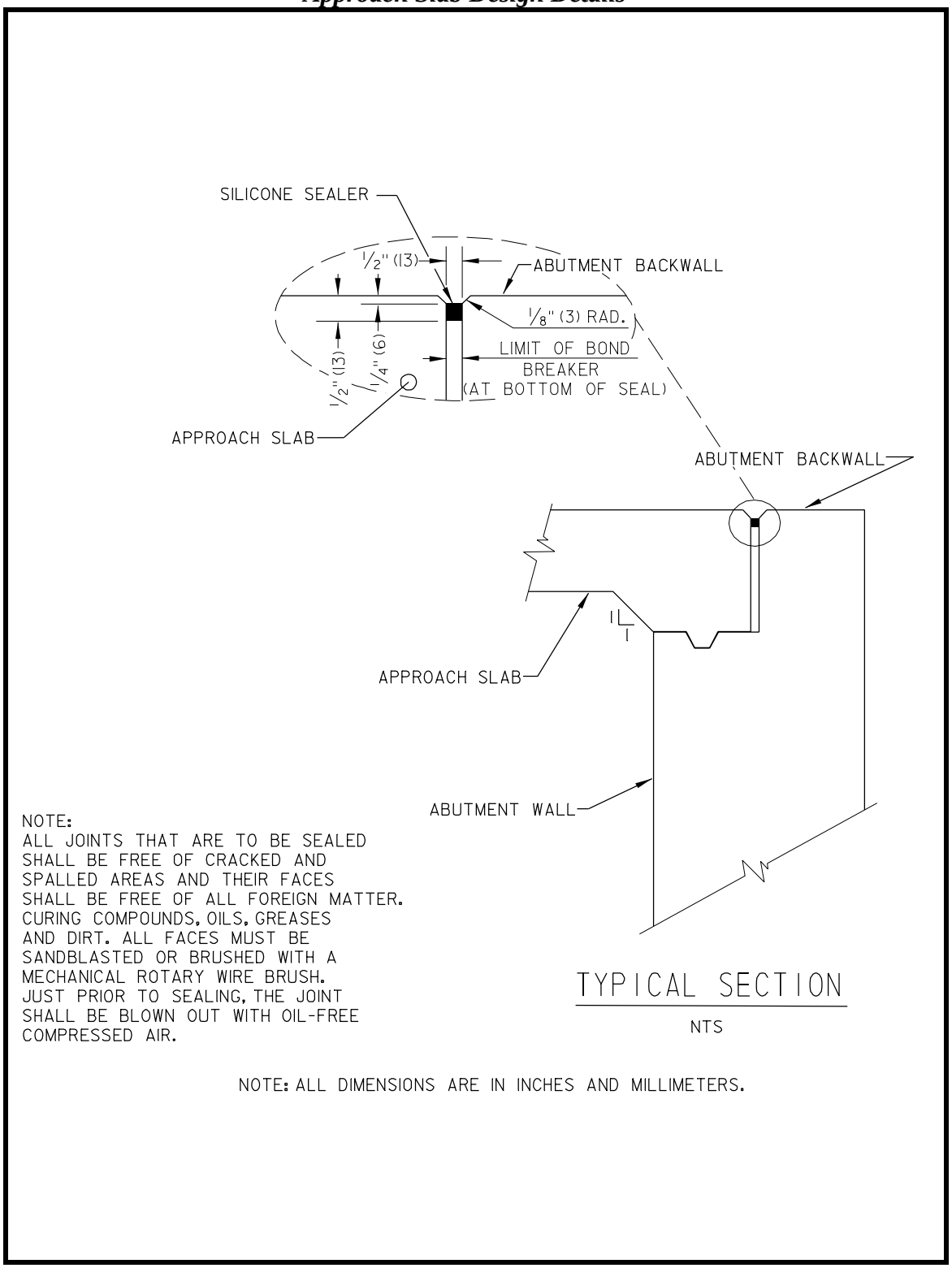

Chapter Six

Substructure Design

6.1 INTRODUCTION

This chapter addresses substructure design for the construction of new structures.

6.1 SUBSURFACE INVESTIGATIONS

A proper design of a structure foundation requires thorough knowledge of the subsurface conditions at the structure site. The investigation should consist of subsurface investigation (borings, in situ testing, and sampling); laboratory testing; geotechnical analysis of all data; and design recommendations. The absence of a thorough geotechnical investigation or adequate data generally leads to:

- a foundation system with a large factor of safety, which is generally more expensive foundation or unsafe, and
- construction problems, disputes and claims.

6.1.1 INFORMATION NEEDED BY THE DESIGNER

The designer needs the following information from the subsurface investigation:

- The data to determine the bearing capacity of the soils and a prediction of the magnitude and rate of settlement. For granular soils, the bearing capacity can be obtained from the Standard Penetration Test (SPT) "N" values. Triaxial or unconfined compression testing and consolidation testing are required to determine the shear strengths and settlement parameters of cohesive soils. Undisturbed samples are needed for laboratory testing where compressible or organic soils are anticipated or found.
- Where rock is encountered, rock cores are retrieved to determine the quality of the rock. Using the Rock Quality Designation (RQD) and the rock type, the designer may estimate the ultimate compressive strength of the rock. (Refer to Section 10.6.2.3.2, Semiempirical Procedures for Bearing Pressure, *AASHTO Specifications*.) Rock cores may also be required to compute quantity estimates of rock excavation. (Rock is normally expected only in northern New Castle County.)
- Boring logs and soil classifications to provide a profile of the foundation soils.
- Water table elevations.

6.1.2 REQUESTS FOR BORINGS

The cost of a boring program is small compared to the overall structure cost. In

the absence of adequate boring data, the design engineer must rely on extremely conservative designs with high safety factors.

The designer must request test borings from Materials and Research (M&R). A boring request form is shown as Figure 6-1. The request should be accompanied by:

- a location map showing the site with respect to the general area;
- a plan of the existing or proposed structure showing the approximate locations of the substructure units and the borings requested. The plan should show the existing and (if available) proposed right-of-way limits. When possible, location controls should be shown on the plan to assist the boring crew to accurately locate test holes by station and offset and to record ground surface elevations;
- depth of boring; and
- design schedule.

On complex projects, it may be more practical to hold a conference between the designer and M&R to discuss the scope and schedule of the proposed project. A two-stage boring schedule may be desirable for larger projects: an initial program followed later by an extensive program based on the results of the initial work. In preparing the request, the designer should consider the following requirements for borings:

- A minimum of one boring per substructure unit.
- A minimum of two borings per structure is required even where multi-plate and other large pipes are planned.
- Pier and abutment footings over 100 feet [30 m] in length require additional borings.
- The borings for adjacent footings should not be located in a straight line but should be staggered at the opposite ends of adjacent footings, unless multiple borings are taken at each footing.
- Where rock is encountered at shallow depths, additional borings or other investigation methods such as probes and test pits may be needed to establish the rock profile.
- Where muck is encountered at shallow depths, additional borings or other investigation methods may be needed to determine muck excavation quantities.
- The number of borings required and their spacing depend on the uniformity of soil strata and the type of structure. Erratic subsurface conditions require close coordination between M&R and the designer. Under non-uniform conditions, additional borings may be necessary.
- Where spread footings are being considered, the designer should request that the driller take continuous samples.

Figure 6-1
Boring Request Form

MEMORANDUM

To: Jim Pappas
Chief Materials and Research Engineer

From: Project Manager – Bridge Design

Date:

SUBJECT: Contract No. _____

Contract Title
P3e Project ID: _____

Attached for your use is a location map for the referenced project. Please provide this section with soil borings and an associated pavement design for this project.

Please contact _____ at 760-_____ if you have any questions. Thank you for your assistance.

Attachment
cc: (Assistant Director/Section Head)
(Squad Manager)
(Designer)
File

The designer should review the results of the test borings as soon as they are received to ensure that the borings are adequate and to give M&R as much time as possible to obtain any additional tests required. The designer must have soils information extending at least 10 feet [3 m] below the estimated pile tip elevation. To achieve this depth on the initial borings, borings should be at least 20 to 30 feet [6 to 9 m] below the top of the hard layer to ensure that the layer is of sufficient thickness. The hard layer is defined as having an N-value of 25 or more for 20 feet [6 m]. If the material is very soft above the hard layer, the boring should extend a minimum of 30 feet [9 m] below the top of the hard layer, unless a very hard layer is encountered. If the material gradually tightens up, 20 feet [6 m] may be sufficient. Where these precautions do not provide data to the appropriate depth, additional borings may be required.

6.1.3 MATERIALS AND RESEARCH SECTION TESTS

M&R routinely performs the following AASHTO tests for subsurface investigations at bridge sites:

- T88 Particle Size Analysis of Soils
- T89 Determining the Liquid Limit of Soils
- T90 Determining the Plastic Limit and Plasticity Index of Soils
- T100 Specific Gravity of Soils
- T206 Penetration Test and Split-Barrel Sampling of Soils
- T207 Thin-Walled Tube Sampling of Soils
- T208 Unconfined Compressive Strength of Cohesive Soils
- T216 One-Dimensional Consolidation Properties of Soils
- T225 Diamond Core Drilling for Site Investigation
- T265 Laboratory Determination of Moisture Content of Soils
- T267 Determination of Organic Content in Soils by Loss of Ignition
- T306 Progressing Auger Borings for Geotechnical Exploration
- ASTM D2850 Standard Test Method for Unconsolidated-Undrained Triaxial Compression Test on Cohesive Soils
- ASTM D4767 Standard Test Method for Consolidated Undrained Triaxial Compression Test for Cohesive Soils

The Standard Penetration Test (SPT), T206, is the most commonly used test in subsurface investigations in Delaware. It is used to determine N-values. The N-values and other in-situ test results from the SPT provide an indication of soil density, consistency, friction angle ϕ, and shear strength. N values are commonly used for foundation design in granular soils. Laboratory testing of undisturbed samples (such as Tests T208, T216, D2850 and D4767) provides design parameters used for pile foundation design in cohesive soils and slope stability analyses. N-values are not recommended for pile design in cohesive soils. N-values must be corrected for effective overburden pressure in granular soils. See Figure 6-2 for the correction factors. (Whoever computes the bearing capacity should make the correction.) The relationship between the corrected N value and the angle of internal friction ϕ for granular soils is shown in Figure 6-3.

Figure 6-2a
N-Value Correction Factors for Granular Soils (U.S. Customary)

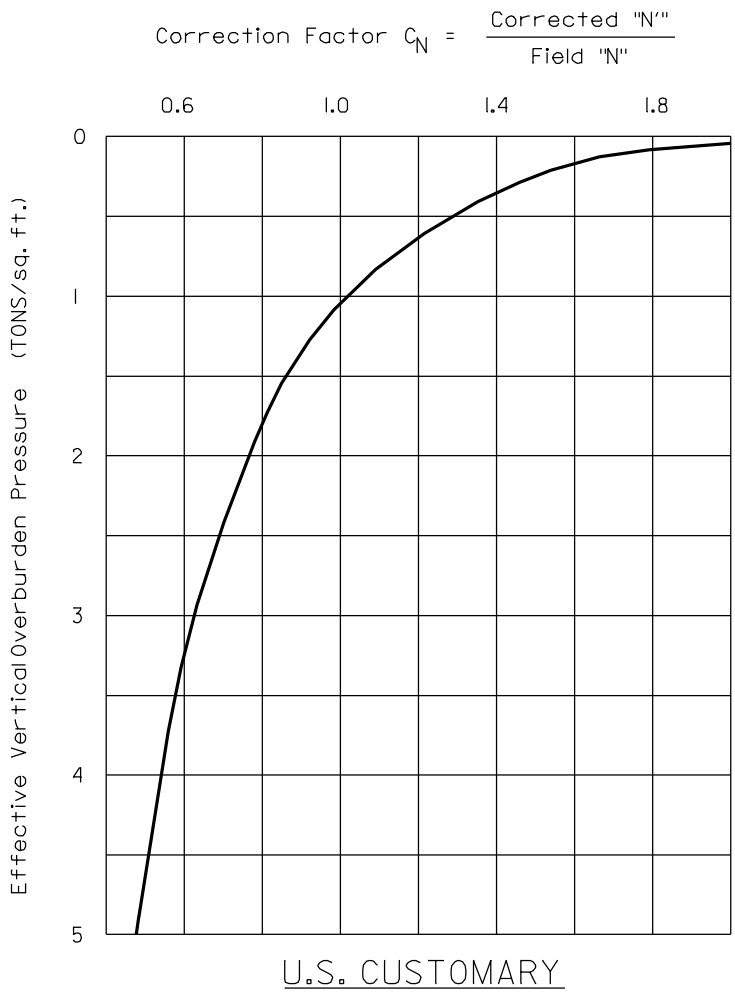

Figure 6-2b
N-Value Correction Factors for Granular Soils [Metric]

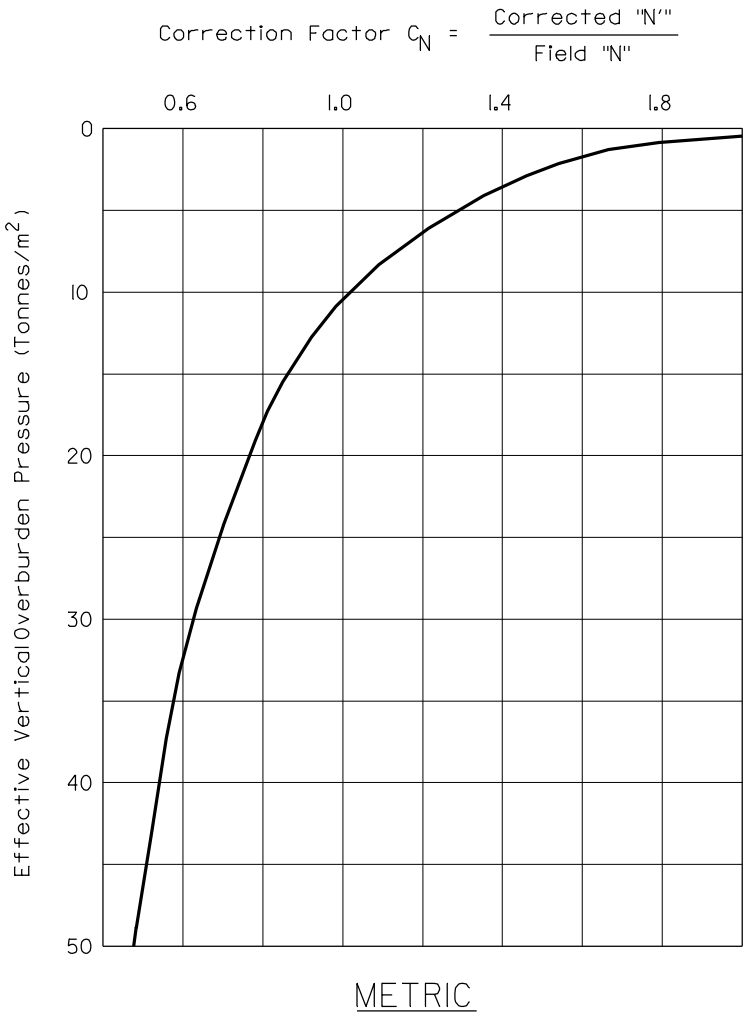

Figure 6-3
Relationship Between Corrected N-Values and ϕ

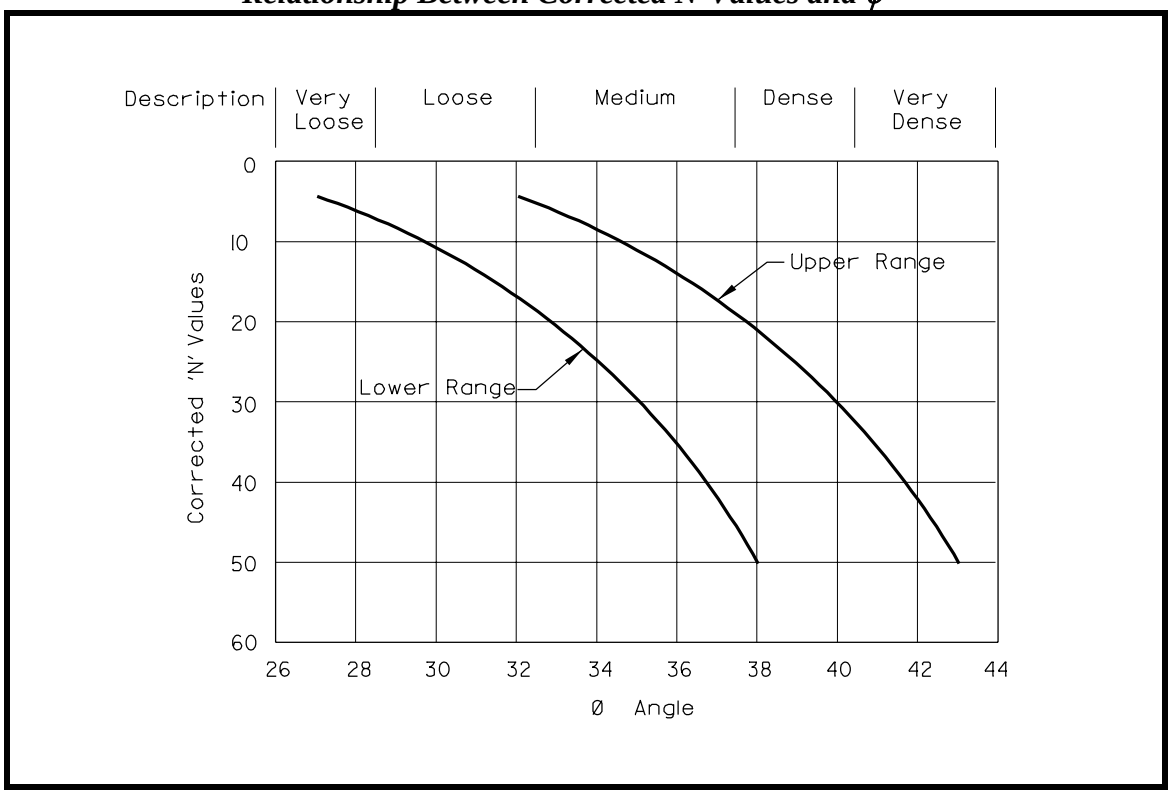

The equation for computing the correction factor is as follows:

$$C_N = 1 / (\text{Overburden Pressure})^{1/2}$$

where overburden pressure is in tonnes per square meter.

M&R can perform the following additional AASHTO tests if requested:

- T92 Determining the Shrinkage Factors in Soils, and
- T193 The California Bearing Ratio.

M&R is not equipped to run every test defined by AASHTO. However, private testing laboratories can be hired to perform other tests if warranted. Tests in this category include the following:

- T223 Field Vane Shear Test in Cohesive Soils - a test conducted in soft, saturated cohesive soils to determine the bearing resistance of the soil.
- T236 Direct Shear Test of Soils Under Consolidated Drained Conditions – a relatively simple test to measure the shear strength of fine granular soils. The test is not recommended for silts or clays because sample drainage cannot be controlled during the test.

The split spoon sampler used for the SPT provides disturbed samples. The SPT consists of driving a 2 inch [50.8 mm] O.D. split-spoon sampler into the soil with a 140

pound [63.5 kg] weight dropped 30 inches [762 mm]. The sampler is driven 18 or 24 inches [460 or 610 mm], and the blow count for each 6 inches [150 mm] is recorded. The number of blows for the second and third 6 inch [150 mm] increments of penetration is considered to be the penetration resistance, N. The SPT N-values can be used to estimate angle of internal friction and relative density of cohesionless soils. Static analytical design procedures for pile foundations use these design parameters.

Rock cores obtained from borings allow a qualitative evaluation of rock mass and distinguish between boulders and bedrock. Rock Quality Designation (RQD) values determined from cores are used in estimating the compressive strength and scourability of rock. Engineering classifications for in situ rock quality are shown in Figure 6-4. Rock Core Samplers (core barrels) are available in various diameters and length. DelDOT uses the NX core barrel, 2-1/8 inches [54 mm] inside diameter and 5 feet [1.5 m] in length.

Figure 6-4
Engineering Classification for In Situ Rock Quality

RQD%	Rock Mass Quality
90-100	Excellent
75-90	Good
50-75	Fair
25-50	Poor
0-25	Very Poor

To obtain the compressive strength of rock, refer to Section 10.6.2.3.2, Semiempirical Procedures for Bearing Pressure, of the *AASHTO Specifications*.

6.1.4 SOIL SAMPLES

Soil samples are divided into two categories: disturbed and undisturbed.

Disturbed samples have experienced large structural disturbances during sampling operations and may be used for identification and classification tests.

Undisturbed samples are those in which structural disturbance is kept to an absolute minimum. They are used for consolidation tests and strength tests, such as direct shear, triaxial shear, and unconfined compression. Strength tests provide shear strength design parameters which are used in static analysis for pile foundations and slope stability analyses. Consolidation tests provide coefficients of recompression (C_r), compression (C_c), and secondary compression (C_a) for estimating the magnitude of structural settlement, and also coefficients of consolidation (C_v), to determine the rate of settlement. Undisturbed samples are needed to evaluate cohesive soils parameters for estimating the magnitude and rate of settlement of spread footings or pile groups.

6.1.5 GROUND WATER MONITORING

Accurate ground water level information is needed for the estimation of soil densities, determination of effective soil pressures, and preparation of effective soil pressure diagrams. This information is vital for foundation design. Water levels will indicate possible construction difficulties that may be encountered during excavation and the level of dewatering effort required.

The ground water elevation will be recorded by the drillers when the borings are made. Since this elevation may vary

throughout the year, the designer may request short- and long-term ground water elevation monitoring. Short-term monitoring is normally performed at 24-hour, 48-hour and 72-hour increments. Long-term monitoring will require installation of monitoring wells at the site.

6.1.6 BORING LOGS

A typical boring log is presented in Figure 6-5.

Information on the first sheet includes state and federal project numbers, the bridge number, the location of the boring, the surface elevation, the equipment used, the sampling method, the depth of investigation, and water level readings.

The other sheets of the log show the sample number, the sample depth, hammer blows per 6 inches [150 mm], descriptions of the material in the samples, the amount of material recovered in each sample, the laboratory soils classification, water table elevation and RQD results. The locations of undisturbed samples are designated with the sample numbers. Any other information is listed under “Remarks.”

A summary of soil analysis tests for the borings is shown in Figure 6-6.

The location (station and offset) and the approximate ground elevation at each boring should be recorded. The drill crew can determine the elevation by hand leveling from a centerline station or the deck grade (at an abutment) of an existing structure.

The boring data is entered into a graphics design file, using the Department's Boring Sheet program so designers can access it with CADD. The boring logs should be included in contract plans.

Figure 6-5a
Sample Boring Log

DELAWARE DEPARTMENT OF TRANSPORTATION
DIVISION OF HIGHWAYS
MATERIALS AND RESEARCH SECTION

PAGE 1 OF 4

F.A. Project:
Boring No.: B # 1
Contract: 25-073-01 BRIDGE 3-362 ON S-465 @ CHIPMANS POND
Boring Loc.: STA. 4+55, 7' Lt. CENTERLINE

Boring Surface Elev: Reference:

Wt. of Casing Hammer:		Lbs.	Average Fall:		IN.
Wt. of Sample Hammer:	140	Lbs.	Average Fall:	30	IN.
Type of: D-Sampler:	SPLIT-BARREL	O.D.	O.D. of SAMPLER:	2	IN.
S-Sampler:		O.D.	O.D.of SAMP.TUBE:		IN.
U-Sampler:		O.D.	O.D.of SAMP.TUBE:		IN.
Core Bit :		O.D.	O.D.of ROCK CORE:		IN.

Casing Size: 3 1/4" Inches; From Depth of: 0.0' To: 78.5'
HOLLOW STEM AUGER From Depth of: To:

Water Level Readings:

Date	Time	Depth of Hole	Depth of Casing	Depth of Water	Elev.of Water
/ /					
/ /					
/ /					
/ /					

Pay Quantities:
2 1/2 in. Dia.Dry Sample Boring: 80.0 Ft.; Dia. U-Sample Boring: Ft.
No. of 2 in. Dia. Shelby Tubes: ; No.of: U-Samples:
2 1/2 in. Dia.Contin.Sample Boring: Ft.; Core Drilling in Rock: Ft.

Boring Contractor: HILLIS-CARNES
Driller: K. HASTINGS
Helpers:

Remarks:

Reviewed By: RANDY FERGUSON Soils Supervisor: MAUREEN KELLEY

NOTES:
1. Make a separate log of each boring&each unsuccessful attempt. Keep a copy of all logs in the field.
2. In daily progress column indicate depth at beginning and end of work day, calendar date, time at beginning and end of work day and weather conditions.
3. All samples shall be numbered in consecutive order regardless of type; dry samples D, wash samples W, shelby tube samples S, undisturbed samples U. Do not assign numbers to lost samples but record blows and reasons for lack of recovery.
4. Mark each U-sample with boring number, sample number, depth, recovery and job number.
5. Record blows on sample per six inches of penetration. Note all blows and penetrations when taken at less than six inch intervals. Indicate method by which penetration of tube sampler was obtained.
6. Indicate changes of material in strata column and list generalized strata classifications.
7. List under remarks the manner by which changes in material were detected, all obstructions, any loss or gain of wash water including amount, the recovery of rock cores in feet and inches and percent of run, and any unusual occurences.

| BORING NUMBER: B # 1

Figure 6-5b
Sample Boring Log

STATE OF DELAWARE
DEPARTMENT OF TRANSPORTATION
DIVISION OF HIGHWAYS

PAGE 2 OF 4

BORING NO. B # 1

CONTRACT: 25-073-01 BRIDGE 3-362 ON S-465 @ CHIPMANS POND
BORING LOCATION: STA. 4+55, 7' Lt. CENTERLINE

DAILY PROGRESS	NO.	SAMPLE DEPTH	BLOWS/6"	SAMPLE DESCRIPTION	CLASS/G.I.	REMARKS
8/18/04	1	0.0'	10	Moist dense brown silty fine to coarse sand	A-2-4 (0)	
			15	w/trace of gravel and clay.		
		1.5'	20			
				12" Recovery		
	2	2.5'	5	Wet stiff light brown fine sandy silt	A-4 (0)	
			4	w/trace of coarse sand and clay.		
		4.0'	7			
				16" Recovery		
	3	5.0'	4	Saturated medium dense light brown fine sand	A-3 (0)	
			7	w/some coarse sand, trace of silt and		
		6.5'	8	gravel.		
				18" Recovery		
	4	7.5'	4	Saturated medium dense light brown fine to	A-3 (0)	
			7	coarse sand w/trace of silt and gravel.		
		9.0'	10			
				18" Recovery		
	5	10.0'	2	Saturated very loose light gray fine sand	A-2-4 (0)	
			2	w/some silt, trace of coarse sand.		
		11.5'	1			
				18" Recovery		
	6	15.0'	2	Saturated loose light gray fine to coarse	A-2-4 (0)	
			3	sand w/some silt, trace of gravel.		
		16.5'	2			
				18" Recovery		
	7	20.0'	4	Saturated loose light gray fine to coarse	A-1-b (0)	
			4	sand w/some gravel, trace of silt.		
		21.5'	4			
				18" Recovery		
	8	25.0'	3	Saturated loose yellowish orange silty	A-2-4 (0)	
			4	fine sand w/trace of coarse sand.		
		26.5'	5			
				18" Recovery		

BORING NO. B # 1
SURFACE ELEV.

Figure 6-5c
Sample Boring Log

STATE OF DELAWARE
DEPARTMENT OF TRANSPORTATION
DIVISION OF HIGHWAYS

PAGE 3 OF 4

BORING NO. B # 1

CONTRACT: 25-073-01 BRIDGE 3-362 ON S-465 @ CHIPMANS POND
BORING LOCATION: STA. 4+55, 7' Lt. CENTERLINE

DAILY PROGRESS	NO.	SAMPLE DEPTH	BLOWS/6"	SAMPLE DESCRIPTION	CLASS/G.I.	REMARKS
8/18/04	9	30.0'	2	Saturated medium dense brown fine sand	A-2-4 (0)	
			5	w/some coarse sand, gravel and silt.		
		31.5'	8			
				18" Recovery		
	10	35.0'	8	Saturated medium dense orange fine to	A-2-4 (0)	
			11	coarse sand w/some silt, trace of gravel.		
		36.5'	18			
				18" Recovery		
	11	40.0'	4	Saturated firm gray fine sandy silt w/trace	A-4 (0)	
			4	of clay, organic matter and gravel.		
		41.5'	4			
				18" Recovery		
	12	45.0'	3	Saturated very stiff gray fine sandy silt	A-4 (0)	
			4	w/some organic matter, trace of coarse sand.		
		46.5'	14			
				18" Recovery		
	13	50.0'	4	Saturated stiff gray clayey silt w/some	A-4 (7)	
			5	fine sand and clay, trace of organic matter.		
		51.5'	7			
				18" Recovery		
	14	55.0'	3	Saturated firm light gray silt w/some	A-4 (2)	
			3	clay, trace of fine sand.		
		56.5'	3			
				18" Recovery		
	15	60.0'	10	Saturated hard gray fine sandy clay	A-6 (6)	
			15	w/trace of coarse sand.		
		61.5'	25			
				18" Recovery		
	16	65.0'	7	Saturated very stiff light gray fine sandy	A-4 (0)	
			8	silt w/trace of coarse sand and clay.		
		66.5'	11			
				18" Recovery		

BORING NO. B # 1
SURFACE ELEV.

Figure 6-5d
Sample Boring Log

STATE OF DELAWARE
DEPARTMENT OF TRANSPORTATION
DIVISION OF HIGHWAYS

PAGE 4 OF 4

BORING NO. B # 1

CONTRACT: 25-073-01 BRIDGE 3-362 ON S-465 @ CHIPMANS POND
BORING LOCATION: STA. 4+55, 7' Lt. CENTERLINE

DAILY PROGRESS	SAMPLE NO.	DEPTH	BLOWS/6"	SAMPLE DESCRIPTION	CLASS/G.I.	REMARKS
8/18/04	17	70.0'	14 21 27	Saturated dense gray silty fine sand.	A-2-4 (0)	
		71.5'				
				18" Recovery		
	18	75.0'	18 24 20	Saturated dense gray fine sand w/trace of silt.	A-3 (0)	
		76.5'				
				18" Recovery		
	19	78.5'	24 30 12	Saturated dense gray fine sand w/trace of silt.	A-3 (0)	
		80.0'				
				18" Recovery		
			(END)			

BORING NO. B # 1
SURFACE ELEV.

Figure 6-6a
Sample Summary of Boring Log Soil Analysis Tests

MATERIALS AND RESEARCH DIVISION
SUMMARY OF SOIL ANALYSIS TESTS PAGE 1
AASHTO TESTS:T-89,T-90, & T-265

CONTRACT- 25-073-01 NAME--- BRIDGE 3-362 ON S-465
DATE----- SEPTEMBER 4, 2004 @ CHIPMANS POND

					********** PERCENT PASSING **********											
LOCATION	DEPTH	2.5	2	1	3/8	4	10	40	200	LL	PL	MO	OR	PI	CLASS	GI
B # 1	S#1															
STA.	0.0- 1.5	100	100	100	100	98	91	65	27	18	15	8	--	3	A-2-4	0
4+55	S#2															
7' Lt.	2.5- 4.0	100	100	100	100	100	100	97	44	15	14	13	--	1	A-4	0
CENTER	S#3															
LINE	5.0- 6.5	100	100	100	98	97	96	85	7	--	--	16	--	NP	A-3	0
	S#4															
	7.5- 9.0	100	100	100	98	97	95	54	9	--	--	18	--	NP	A-3	0
	S#5															
	10.0-11.5	100	100	100	100	100	100	97	20	--	--	30	--	NP	A-2-4	0
	S#6															
	15.0-16.5	100	100	100	100	100	99	69	15	--	--	30	--	NP	A-2-4	0
	S#7															
	20.0-21.5	100	100	100	93	91	89	50	10	--	--	23	--	NP	A-1-b	0
	S#8															
	25.0-26.5	100	100	100	100	100	100	99	24	--	--	34	--	NP	A-2-4	0
	S#9															
	30.0-31.5	100	100	100	94	88	81	62	15	--	--	25	--	NP	A-2-4	0
	S#10															
	35.0-36.5	100	100	100	95	94	91	52	12	--	--	21	--	NP	A-2-4	0
	S#11															
	40.0-41.5	100	100	100	100	100	100	99	39	20	17	23	3	3	A-4	0
	S#12															
	45.0-46.5	100	100	100	100	100	100	99	40	17	--	19	4	NP	A-4	0
	S#13															
	50.0-51.5	100	100	100	100	100	100	100	83	29	19	27	3	10	A-4	7
	S#14															
	55.0-56.5	100	100	100	100	100	100	100	93	24	20	27	--	4	A-4	2
	S#15															
	60.0-61.5	100	100	100	100	100	100	98	66	28	15	17	--	13	A-6	6
	S#16															
	65.0-66.5	100	100	100	100	100	100	99	50	23	22	20	--	1	A-4	0
	S#17															
	70.0-71.5	100	100	100	100	100	100	100	22	--	--	22	--	NP	A-2-4	0

Figure 6-6b
Sample Summary of Boring Log Soil Analysis Tests

MATERIALS AND RESEARCH DIVISION
SUMMARY OF SOIL ANALYSIS TESTS PAGE 2
AASHTO TESTS:T-89,T-90, & T-265

CONTRACT- 25-073-01 NAME--- BRIDGE 3-362 ON S-465
DATE----- SEPTEMBER 4, 2004 @ CHIPMANS POND

		********** PERCENT PASSING **********														
LOCATION	DEPTH	2.5	2	1	3/8	4	10	40	200	LL	PL	MO	OR	PI	CLASS	GI
	S#18 75.0-76.5	100	100	100	100	100	100	100	5	--	--	26	--	NP	A-3	0
	S#19 78.5-80.0	100	100	100	100	100	100	100	8	--	--	27	--	NP	A-3	0
	END															

6.1.7 SOILS DEFINITIONS

When selecting the type of foundation for bridges, the designer must consider the existing soils found at the site.

- Bedrock—The solid rock below the overburden soil, decomposed rock fragments or other loose superficial deposits. Bedrock exposed at the surface is known as rock outcrop.
- Boulders—Rounded fragments of rock that will be retained on a 3 inch [75 mm] sieve. Isolated boulders should not be confused with bedrock.
- Decomposed Rock—The upper portions of bedrock may be found in varying stages of decomposition. Decomposed rock represents the uppermost product of weathering and decomposition of bedrock in situ. In its most decomposed state, it can be compact soil that retains some of the appearance and texture of the original rock structure. Decomposed rock is not equivalent to bedrock for bearing capacity.
- Muck—Deposits of a saturated or unsaturated mixture of soils and organic matter not suitable for foundation material regardless of moisture content.
- Organic Matter—The more or less decomposed material of soil derived from organic sources, usually from plant remains. The term covers such material in all stages of decay.
- Organic Soils—Soils that contain significant amounts of muck.

While there are other soils classification systems, Delaware uses the AASHTO definitions to classify soils. The criteria for these classifications are in Figure 6-7.

- A-1 — Well-graded mixture of stone fragments or gravel, coarse sand, fine sand and a nonplastic or feebly plastic soil binder. This group also includes stone fragments, gravel, coarse sand, volcanic cinders, etc., without soil binder.
- A-1-a — Predominantly stone fragments or gravel, either with or without a well-graded binder of fine material.
- A-1-b — Predominantly coarse sand, either with or without a well-graded soil binder.
- A-2 — This group includes a wide variety of "granular" materials which are borderline between the materials falling in the A-1 and A-3 Groups and silt-clay materials of Groups A-4, A-5, A-6 and A-7. It includes all materials containing 35 percent or less passing the No. 200 [75 µm] sieve which cannot be classified as A-1 or A-3, due to fines content, plasticity or both, in excess of the limitations of those groups.
- A-2-4 and A-2-5 — Include various granular materials containing 35 percent or less passing the No. 200 [75 µm] sieve and with the portion passing the No. 40 [425 µm] sieve having the characteristics of Groups A-4 and A-5. These groups include such materials as gravel and coarse sand with silt contents or plasticity indexes in excess of the limitations of Group A-1, and fine sand with nonplastic silt content in excess of the limitations of Group A-3.
- A-2-6 and A-2-7 — Include materials similar to those in Subgroups A-2-4 and A-2-5 except that the fine portion contains plastic clay having the characteristics of Group A-6 or A-7.

Figure 6-7
AASHTO Soil Classification System

General Classification	Granular Materials (35% or less of total sample passing the 75 μm sieve)							Silty-clay Materials (More than 35% of total sample passing the 75 μm sieve)			
Group Classification	A-1		A-3	A-2				A-4	A-5	A-6	A-7
	A-1-a	A-1-b		A-2-4	A-2-5	A-2-6	A-2-7				A-7-5[1] A-7-6[2]
Sieve Analysis (% Passing)											
2.00 μm Sieve	50 max										
425 μm Sieve	30 max	50 max	51 max								
75 μm Sieve	15 max	25 max	10 max	35 max	35 max	35 max	35 max	36 min	36 min	36 min	36 min
For Fraction Passing No. 40 Sieve											
Liquid Limit (LL)				40 max	41 min	40 max	41 min	40 max	41 min	40 max	41 min
Plasticity Index (PI)	6 max		Non-plastic	10 max	10 max	11 min	11 min	10 max	10 max	11 min	11 min
Usual Type of Material	Stone fragments, gravel and sand		Fine sand	Silty or clayey gravel and sand				Mostly silty soils		Mostly clayey soils	
Subgrade Rating	Excellent to good							Fair to poor			

[1] If PI $\leq$ LL – 30, it is A-7-5.

[2] If PI > LL – 30, it is A-7-6.

- A-3 — Typical material of this group is fine beach sand or fine desert blow sand without silty or clayey fines or with a very small amount of nonplastic silt. The group also includes stream-deposited mixtures of poorly graded fine sand and limited amounts of coarse sand and gravel. This material consists of nonplastic sands, such as beach sand, that is deficient in coarse material and soil binder.
- A-4 — Typically, this material is a nonplastic or moderately plastic silty soil having more than 35 percent passing the No. 200 [75 µm] sieve. The group also includes mixtures of fine silty soils with up to 36 percent silt and clay passing the No. 200 [75 µm] sieve.
- A-5 — This material is typically similar to Group A-4, except that it usually consists of fine sandy or silty soils containing mica or silica and may be highly elastic as indicated by the high liquid limit.
- A-6 — Typically, this material is a plastic clay soil having more than 35 percent passing the No. 200 [75 µm] sieve. The group also includes mixtures of fine clayey soils with up to 36 percent silt and clay passing the No. 200 [75 µm] sieve. Materials of this group usually have high volume changes between wet and dry states.
- A-7 — The typical material in this group is similar to Group A-6, except that it has the high liquid limit characteristics of Group A-5 and may be elastic as well as subject to high volume change.
- A-7-5 — Includes materials with moderate plasticity indexes in relation to liquid limit and which may be highly elastic as well as subject to considerable volume change.
- A-7-6 — Includes materials with high plasticity indexes in relation to liquid limit and which are subject to extremely high volume change.

The Group Index is an empirical constant based on the percent passing the No. 200 [75 µm] sieve, the liquid limit and the plasticity index of the material. The group index is shown in parentheses after the soils classification, e.g. A-7-6(12). In general, the higher the group index number, the poorer the soil bearing capacity.

6.1.8 GEOTECHNICAL REPORTS

Geotechnical reports are required for major structures or where foundation problems are anticipated. They shall include the following information:

- a summary of the findings;
- a plan view of the structure showing the location of the borings;
- the boring logs;
- an evaluation of the borings; and
- a foundation type recommendation.

The recommendation for all foundations should include the following:

- soil parameters, including depth, thickness and variability of soil strata, identification and classification of soils, shear strength, compressibility, stiffness, permeability, frost susceptibility, and expansion potential;
- rock parameters, including depth to rock, identification and classification of rock, rock quality (i.e., soundness, hardness, jointing, resistance to weathering, and solutioning), compressive strength, and expansion potential;
- presence of boulders, if encountered; and

- settlement considerations including required waiting period.

6.1.9 FOUNDATION REPORTS

Foundation reports are required for all structures. They shall include:

- the soil bearing capacity;
- the type of foundation;
- bottom footing elevation;
- settlement considerations including required waiting period;
- cofferdam requirements, if needed;
- any construction instrumentation and monitoring requirements;
- the anticipated scour depth; and
- slope stability.

If piles are recommended, the recommendations should also include:

- the type(s) of piles;
- the pile size;
- the design bearing capacity of the piles;
- the proposed pile lengths;
- the minimum pile tip elevation (even if it is higher than the final tip elevation); and
- the ultimate design pile capacity for drivability through the estimated scour layer. (See Section 6.2.2.4.3.)

Copies of the foundation report should be made available to Bridge Design, M&R, and FHWA (on non-exempt projects).

6.2 FOUNDATION DESIGN

A footing is the interfacing element between the superstructure and the underlying soil or rock. The loads transmitted from the superstructure to the underlying soil must not cause soil shear failure or damaging settlement. See Section 6.2.1 for limits of allowable total and differential settlement.

Structures may be widened on either the median side or outside on dual structures. Design and construction of the ultimate substructure will depend on available construction access and the estimated time when widening will be needed.

- If the structure will be widened on the median side (or on the outside where access will be limited), the ultimate substructure, including widened portions, should be built during the original construction.
- If the widening on the outside will be required in the immediate future (5 to 10 years), the substructure should be included in the original design, and may be built during the original construction.
- If widening is further in the future, the substructure should be designed to facilitate splicing the rebar and adding to the substructure.

It is essential to systematically consider various footing types and to select the optimum alternative based on the superstructure and subsurface conditions.

It is recommended to use the following approach to determine the optimum foundation alternative:

1. Select or assume bridge characteristics: pier type, superstructure and substructure types, span lengths, etc.
2. Determine the foundation loads to be supported and special requirements of the foundation. Special requirements may include limits on total and differential settlements, negative skin friction, lateral loads, scour, and time constraints on construction.

3. Evaluate the subsurface investigation and the laboratory testing data.
4. Prepare a final soil profile and critical cross sections on major projects. Determine soil layers suitable or unsuitable for spread footings or pile foundations.
5. Consider and prepare alternative designs, if feasible.
   - Shallow Foundations—spread footings
   - Deep Foundations—drilled shafts, pile foundations, or caissons

   Figure 6-8 shows foundation types and applicable soil conditions.
6. Prepare cost estimates for feasible alternative designs.
7. Select the optimum alternative. Generally the most economical alternative is selected and recommended. The ability of the local construction force, and availability of materials and equipment should also be considered.

Where the depth from the bottom of the footing to rock is minimal, since short piles are generally undesirable, the designer should specify excavation to rock rather than placing short driven piles. There are four options that preclude the use of short piles:

1. Specifying subfoundation backfill from the rock surface to the bottom of the footing.
2. Using subfoundation concrete instead of backfill where the depth to bedrock is shallow. Dimensions of the subfoundation concrete should be shown in the drawings.
3. Lowering the bottom of the footing (creating a thicker footing).
4. Constructing a taller pier or abutment.

Figure 6-8
Foundation Types and Applicable Soils Conditions

Foundation Type	Applicable Soils Conditions
Spread footing or wall footing	Any conditions where bearing capacity is adequate for applied load. May use on single stratum, firm layer over soft layer, or soft layer over firm layer. Check immediate, differential and consolidation settlements.
Pile foundation (friction, end bearing or combination)	Poor surface and near-surface soils. Soils of high bearing capacity 25 to 150 ft [7.5 to 45 m] below ground surface. Friction piles distribute load along pile shaft if the soil strength is adequate. End bearing piles transfer load by point bearing on dense soil or rock of high bearing capacity. Check settlement of pile groups in clay.
Caisson (drilled shaft) - generally end bearing or combination of end bearing and skin resistance	Poor surface and near-surface soils. Soil of high bearing capacity (point bearing) is 25 to 50 ft [7.5 to 15 m] below ground surface.

The designer must specify excavation into the rock to key the footing into the rock and to establish a suitable level bearing surface. The excavation in the rock can be the full width of the footing or can be benched.

Any footing that exceeds 3 feet [1 m] in depth must have vertical reinforcement to prevent cracking.

For major projects, if the estimated costs of feasible foundation alternatives (during the design stage) are within 15 percent of each other, then alternate foundation designs should be considered for inclusion in the contract documents.

6.2.1 SPREAD FOOTING FOUNDATIONS

It is necessary to consider the feasibility of spread footings in any foundation selection process. Spread footings are generally more economical than deep foundations (piles and caissons). Pile foundations should not be used indiscriminately for all subsurface conditions or for all structures. There are subsurface conditions where pile foundations are difficult to install and others where they may not be necessary. Depending on the subsurface investigation findings, spread footings may be used.

The term "bearing capacity" denotes the loading intensity that the bearing materials can sustain without such deformation as would result in settlement damaging the structure. Use the method defined in the *AASHTO Specifications* to compute soil bearing capacity.

In the design of continuous-span bridges, the designer must be aware of the possibility of settlement of the earth below footings. Check the soils report for types of soil that are prone to settle. If long-term differential settlement due to dead load is expected to exceed ½ inch [13 mm] or if total long-term settlement is expected to exceed 1 inch [25 mm], a pile foundation is required. Spread footings for continuous-span bridges may be used only with prior approval by the Bridge Design Engineer.

6.2.2 PILES

6.2.2.1 Determining the Need for a Pile Foundation

The first difficult problem facing the foundation designer is establishing whether the site conditions are such that piles must be used. Principal situations in which piles may be needed are shown in Figure 6-9.

Figure 6-9a shows the most common case in which the upper soil strata are too compressible or too weak to support heavy vertical loads. In this case, piles carry loads to a deep, rigid stratum and act as point bearing piles. In the absence of a rigid stratum within a reasonable depth, the loads must be gradually transferred, mainly by friction, along pile shafts-friction piles (Figure 6-9b). An important point to remember is that piles transfer load through unsuitable layers to suitable layers. The foundation engineer must define at what depth suitable soil layers begin in the soil profile.

Piles are frequently needed because of the relative inability of shallow footings to resist inclined, horizontal or uplift forces and overturning moments. Piles resist upward forces by downward skin friction around their shafts-uplift piles (Figure 6-9c). Horizontal forces are resisted either by vertical piles in bending (Figure 6-9d), or by groups of vertical and battered piles, which combine axial and lateral resistances of all piles in the group (Figure 6-9e).

Figure 6-9
Principal Situations Where Piles May Be Needed

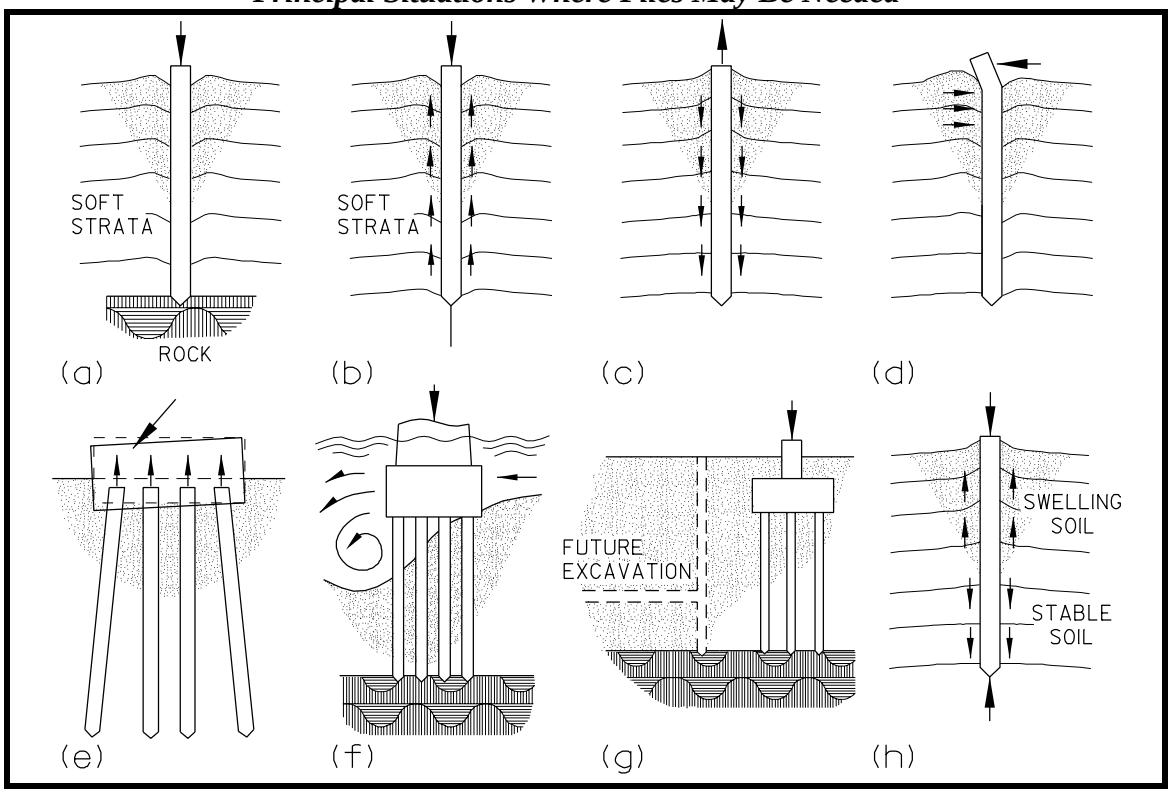

Negative skin friction occurs where the soil surrounding the pile exhibits a downward movement with respect to the pile shaft. There are various causes of the downward movement of the soil. All the causes increase the load on the pile. This is also known as downdrag and is analyzed as additional axial load.

Pile foundations are often required where scour around footings could cause loss of bearing capacity at shallow depths (Figure 6-9f) or where future excavation is anticipated (Figure 6-9g). In either case the piles must be extended to develop the necessary capacity below the level of expected scour or excavation. This will prevent costly damage and eliminate the need for future underpinning.

Pile foundations may be needed in some areas to prevent undesirable seasonal movements of the foundations. Piles under such conditions are designed to transfer foundation loads, including uplift or downdrag, to a level unaffected by seasonal moisture movements (Figure 6-9h). See Section 6.2.2.4 for methods to reduce negative skin friction.

In many instances, either a shallow or pile foundation alternative is technically feasible. Under such circumstances, a reasonably detailed shallow foundation analysis including (1) dimensions and depth of shallow footings based on allowable bearing capacity, and (2) the magnitude and time-rate of settlement under anticipated loads, should be performed. A comparative analysis of the pile foundation alternatives should also be made. An approximate cost analysis of both alternatives should be performed and may include such factors as construction time and uncertainties. The emphasis in the selection of foundation type

must be placed on the cost analysis of feasible alternatives.

Piles should not be used where the depth to bedrock is less than 10 feet [3 m]. In these cases, it is difficult to develop adequate lateral stability. See Section 6.2 for a discussion of alternatives to the use of short piles.

6.2.2.2 Types and Details

Load-bearing piles of various materials and design characteristics are commonly used. The types of load-bearing piles used in Delaware are:

- precast, prestressed concrete piles;
- precast-prestressed concrete cylinder piles;
- cast-in-place concrete piles;
- steel h-piles; and
- timber piles.

Load-bearing piles can also be classified by their method of load transfer from the pile to the soil mass, as shown in Figure 6-9. Load transfer can be by friction, point bearing or a combination.

6.2.2.2.1 Precast-Prestressed Concrete Piles

Precast-prestressed concrete piles are the preferred choice for use as pier bents over water. The minimum preferred size is 12 inches [300 mm] for abutments and 18 inches [450 mm] for bents.

Precast concrete piles are usually of constant cross section. Concrete piles are considered non-corrosive but can be damaged by direct chemical attack (e.g., from organic soil, industrial wastes or organic fills), electrolytic action (chemical or stray direct currents), or oxidation. Concrete can be protected from chemical attack by use of special cements or coatings.

Prestressed concrete piles are generally suitable for use as friction piles when driven in sand, gravel or clays. They are suitable for driving in soils containing boulders when designed for it. A rock shoe attached to the pile tip allows penetration through obstructions. Prestressed concrete piles are capable of high capacities when used as point bearing piles.

This pile consists of a configuration similar to a conventional reinforced concrete pile except that the longitudinal reinforcing steel is replaced by the prestressing steel. The prestressing steel is in the form of strands and is placed in tension. The prestressing steel is enclosed in a conventional steel spiral. In designing prestressed concrete piles for bents, the designer must specify special spiral reinforcement. Normal spiral reinforcement is used for piles fully embedded in soil.

Prestressed piles are pretensioned and are usually cast full length in permanent casting beds. Typical details for prestressed concrete piles with conventional spiral reinforcement are shown in Figure 6-10.

Dowel bars for pile cap development should only be used when necessary; when they are used:

- The holes for the dowels shall be field-drilled when possible.
- Preformed holes shall be long enough to allow for anticipated pile cut-offs.
- When preformed holes are used, the net cross-sectional area shall be considered in the wave equation analysis.
- The contractor shall submit a placement procedure for the grout which will have to be approved.

Figure 6-10
Typical Precast-Prestressed Concrete Pile Details

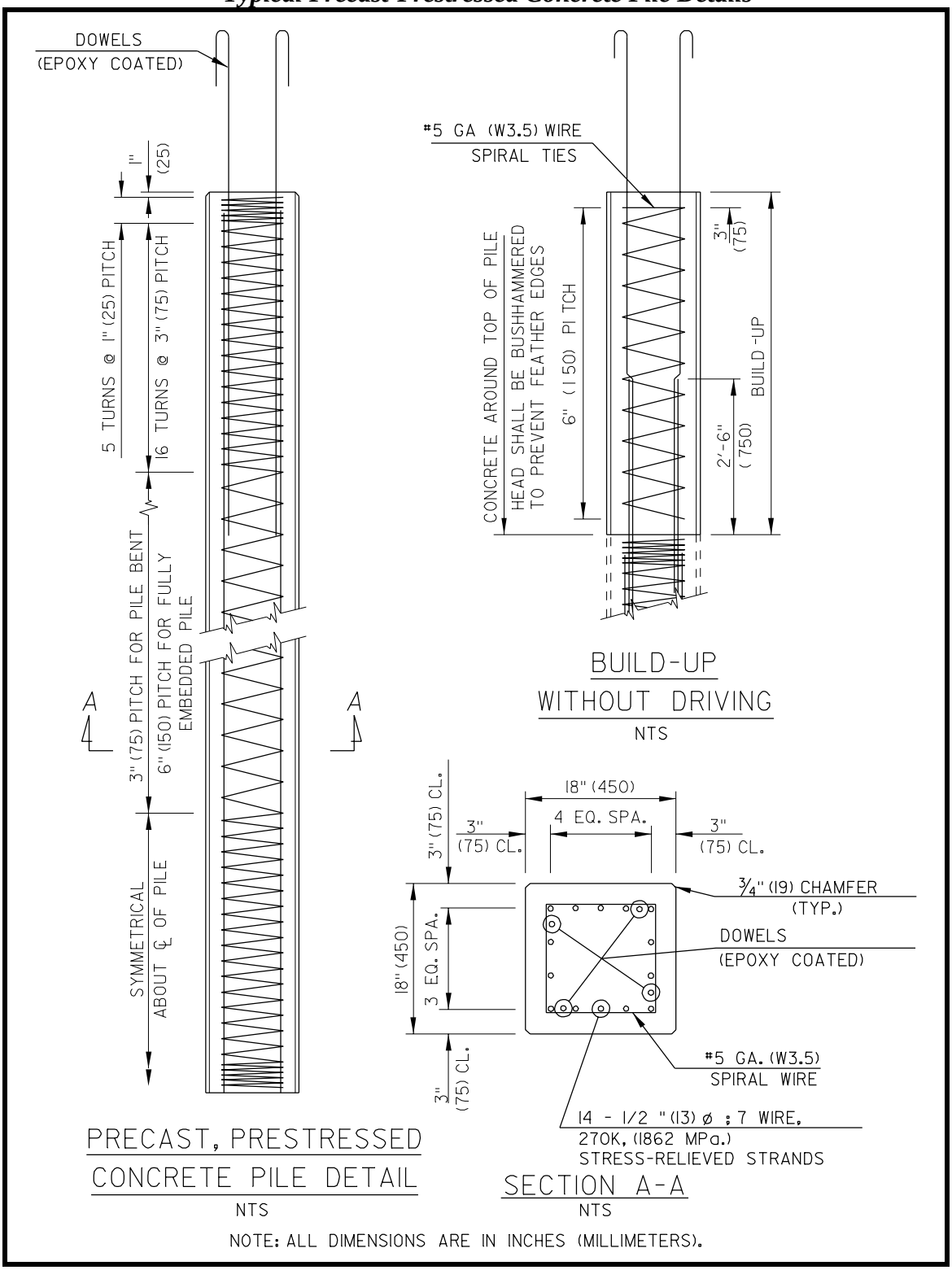

The primary advantage of prestressed concrete piles over conventional reinforced concrete piles is durability. Because the concrete is under continuous compression, hairline cracks are kept tightly closed and thus prestressed piles are usually more durable than conventionally reinforced piles. Another advantage of prestressing (compression) is that the tensile stresses which can develop in the concrete under certain driving conditions are less critical.

Splicing precast-prestressed concrete piles is not recommended. When piles must be driven to an elevation lower than the bottom of the cap to achieve bearing, cap heights may be increased to accomplish the design with approval of the Bridge Design Engineer.

6.2.2.2.2 Precast-Prestressed Concrete Cylinder Piles

Precast-prestressed concrete cylinder piles are post-tensioned piles cast in sections, bonded with a joint compound, and then tensioned in lengths containing several segments. Special concrete is cast by a process unique to cylinder piles which achieves high density and low porosity. The pile is virtually impervious to moisture. Cylindrical piles have good rigidity for long unsupported lengths. Results of chloride ion penetration and permeability tests on prestressed cylinder piles indicate that the spun cylinder piles have excellent resistance to chloride intrusion. Generally, cylinder piles are used for pile bents. The piles typically extend above ground and are designed to resist a combination of axial loads and bending moments. Diameters of 36 to 54 inches [900 to 1350 mm] may be used.

6.2.2.2.3 Cast-in-Place Concrete Piles

In general, cast-in-place concrete piles are installed by driving steel shells or pipes. Steel shell and pipe piles are easily spliced so predetermination of pile lengths is not as critical as for precast-prestressed concrete piles.

Reinforcing the pile length is required to provide adequate capacity. If the pile is fully embedded into soil, the minimum length of the pile reinforcement cage will be 6 feet [2 m]. In piles used for pile bents, the reinforcing cage must extend a minimum of 10 feet [3 m] below the point of fixity. See Section 6.5.3 for methods to determine the point of fixity. The designer must consider the relationship between pile reinforcement and the location of tapered pile sections. Normally, the reinforcement cage will not be tapered. The designer must properly select a tapered pile section when considering the termination point of the reinforcement cage.

Due to environmental and maintenance considerations, the designer should not specify cast-in-place piles for locations over water.

6.2.2.2.3.1 Steel Shell Piles

Cased fluted steel shell piles filled with concrete are the most widely used type of cast-in-place concrete pile.

After the shell has been driven and before concrete is placed, its full length is inspected internally. Reinforcing steel is required to provide a positive connection to the footing. Reinforcing steel may also be used to provide additional bending capacity. Shells are best suited for friction piles in granular material. Fluted steel shells are

utilized in shell thicknesses of 3 gage to 7 gage [6.4 to 4.6 mm]. The fluted design has two primary functional advantages: 1) it adds the stiffness necessary for handling and driving lightweight piles; and 2) the additional surface area provides additional frictional resistance.

Splicing fluted steel shell sections is accomplished relatively easily by welding. A typical pile splice is shown on Figure 6-11.

Reinforcing steel is placed in the shells prior to placing the concrete. Figure 6-12 shows typical reinforcement details.

6.2.2.2.3.2 Steel Pipe Piles

Pipe piles usually consist of seamless, welded or spiral welded steel pipes. The pipe sizes used in Delaware are 12 to 18 inch [300 to 450 mm] diameters. The designer must specify the grade and thickness of steel for the pipe.

Pipe piles are driven with closed ends and are always filled with concrete. A closed-ended pile is generally formed by welding a flat plate of 0.5 to 0.75 inch [12.7 to 19.0 mm] or a conical point to the end of the pile. When pipe piles are driven to weathered rock or through boulders, a cruciform end plate or a conical point with rounded nose is often used to prevent distortion of the pile.

Pipe piles are spliced by using full penetration butt welds. The discussion presented under H-piles on corrosion is also applicable to pipe piles. A typical welded splice detail is shown in Figure 6-13.

Figure 6-11
Typical Splice Detail – Fluted Steel Shell

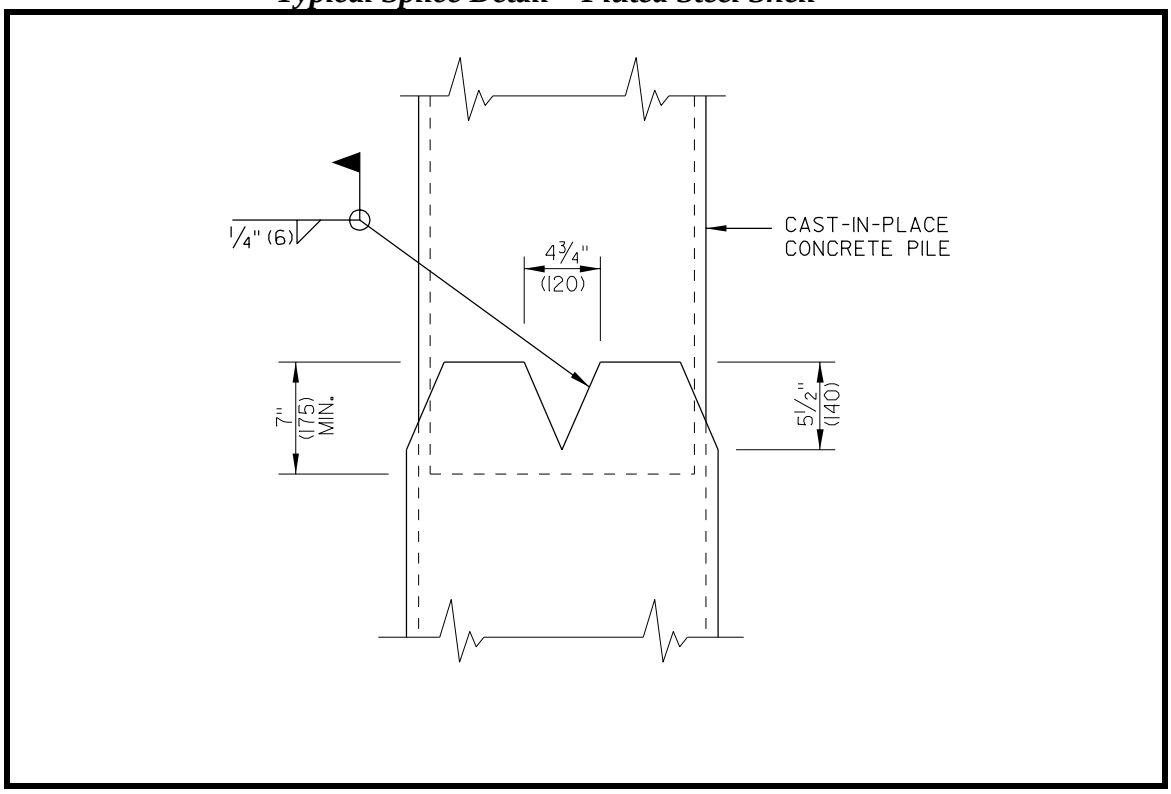

Figure 6-12
Typical Pile Reinforcement – Pile Shell

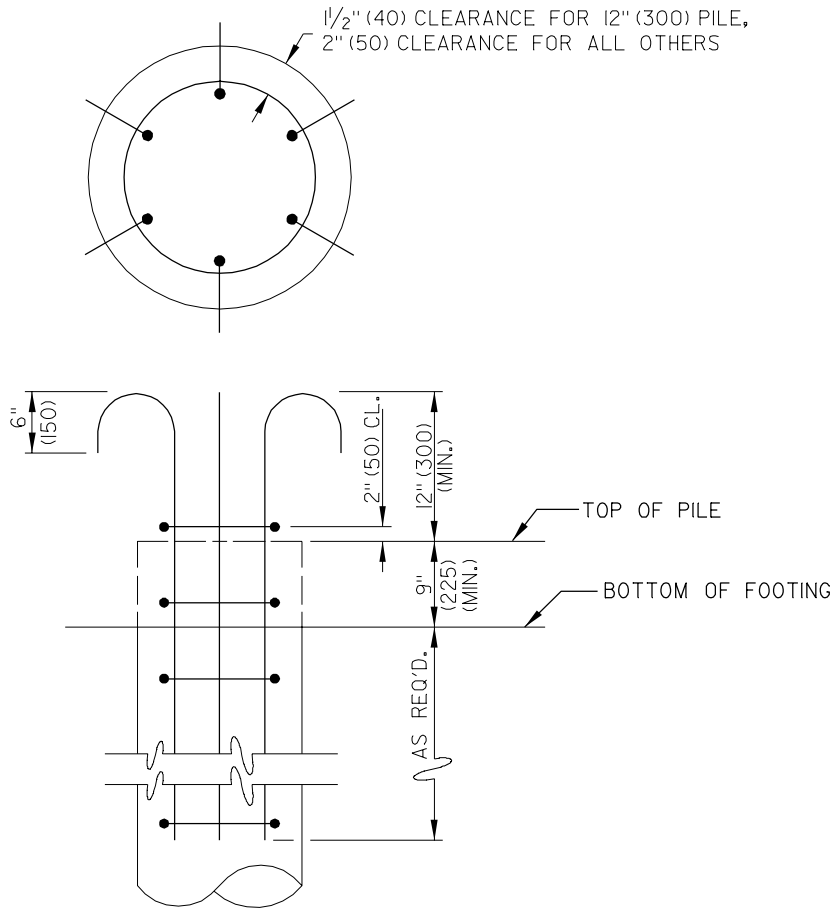

NOTE:
1. REBAR LAYOUT SHOWN FOR GENERAL LAYOUT.
2. THE ENGINEER SHALL BE RESPONSIBLE FOR THE PILE CAGE DESIGN.
3. NO PILE SPLICING TO BE ALLOWED ON ANY PORTION OF THE PILE THAT IS TO REMAIN EXPOSED IN THE COMPLETED STRUCTURE, EXCEPT IN SPECIAL SITUATIONS THAT MAY REQUIRE A SPLICE. ANY SPLICE SHALL BE APPROVED BY THE ENGINEER.
4. GAGE, ESTIMATED LENGTH, TAPER, SIZE AND REQUIRED DESIGN BEARING CAPACITY SHALL BE SPECIFIED BY THE ENGINEER.
5. NUMBER #4 (13) TIES MAY BE TACK WELDED ON EVERY OTHER BAR INSTEAD OF BEING TIED. SPIRAL TIES MAY BE SUBSTITUTED FOR TIES AT 1'-6" (450) SPACING.

Figure 6-13
Typical Splice Detail – Pipe Pile Shell

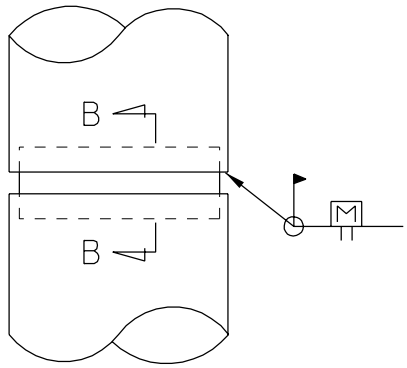

ELEVATION OF SPLICE
(USING ALL WELDED ALTERNATE)

SCALE : N.T.S.

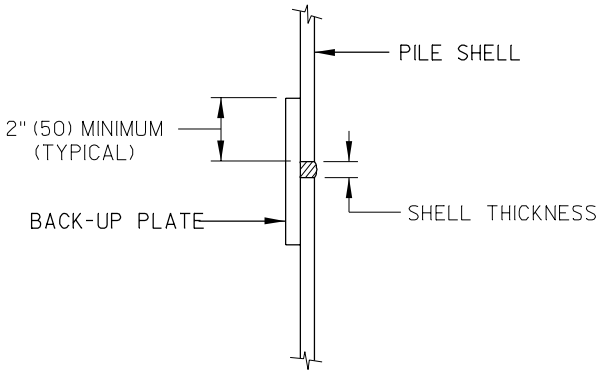

NOTE:
BACK-UP PLATE TO BE CUT FROM SAME PILE SIZE AS IS BEING SPLICED.
CUT AND BEND TO FIT INSIDE DIAMETER OF PILE.

SECTION B-B

NTS

NOTES:
1. NO PILE SPLICING TO BE ALLOWED ON ANY PORTION OF PILE THAT IS TO REMAIN EXPOSED IN COMPLETED STRUCTURE.
2. SPLICER SLEEVE MATERIAL SHALL BE STEEL CONFORMING TO ASTM DESIGNATION A709, GRADE 36 (250).

Steel pipe piles can be used as friction, point bearing or rock-socketed piles. They are commonly used where variable pile lengths are required because splicing is relatively easy. As noted in Section 6.2.2.1, piles should not be used where the depth to bedrock is less than 10 ft. [3 m].

6.2.2.2.4 Steel H-Piles

Steel H-piles consist of rolled wide flange steel H-sections. They are manufactured in standard sizes with nominal beam depths in the range of 8 to 14 inches [200 to 350 mm]. H-piles result in small relative volume displacement during driving, which may be advantageous when driving near other structures or buildings.

Steel H-piles commonly conform with AASHTO M183 [M183M] Specifications. They are not used where they will be exposed to the elements, so they are normally used only where fully embedded in soil to support footings, e.g. between footings and relatively shallow bedrock. As noted in Section 6.2.2.1, piles should not be used where the depth to bedrock is less than 10 ft. [3 m].

Splices are commonly made by full penetration butt welds. The splice should be as strong as the pile. Proprietary splices are also used for splicing H-piles.

A steel load transfer cap is not required if the top of the pile is adequately embedded in a concrete cap. The minimum embedment shall be 12 inches [300 mm]. Pile points are required for driving H-piles through dense soil or soil containing boulders. Pile points are also used for penetration into a sloping rock surface. Proprietary pile points welded to pile tips are commonly used. H-piles are suitable for use as end bearing piles, and occasionally as combination friction and end-bearing piles. Use of pile points must be approved by the Bridge Design Engineer. Because H-piles generally displace a minimum of material, they can be driven more easily through dense granular layers and very stiff clays. The problems associated with soil heave during foundation installation are often reduced by using H-piles. H-piles are commonly used for any depth because splicing is relatively easy.

6.2.2.2.5 Timber Piles

Timber piles are made from Southern yellow pine or Douglas fir trees. For hard driving, the tip should be provided with a metal shoe. See Section 618 of the *Standard Specifications* for minimum pile dimensions and straightness requirements.

Where a timber pile is subjected to alternate wetting and drying or is located in the dry above the water table, the service life may be relatively short due to decay and damage by insects. Even piles permanently submerged can suffer damage from fungus or parasites. Piling in a marine environment is also subject to damage from marine borers. Consequently, all timber piles specified for permanent structures will be treated. For the protection method, see Section 618 of the *Standard Specifications*. Other treatments specified by the American Wood Preserver's Association may be considered when approved by the Bridge Design Engineer. The designer should specify the desired treatment.

Driving timber piles often results in the crushing of fibers on the driving end (brooming). This can be controlled by using a driving cap with cushion material and metal strapping around the butt. Timber pile splices are not permitted.

Timber piles are best suited for use as friction piles in sands, silts and clays. They

are not recommended to be driven through dense gravel, boulders, or till, or for end-bearing piles on rock since they are vulnerable to butt and tip damage in hard driving.

6.2.2.3 Selection of Pile Type

No exact criteria for selecting the various pile types can be given. Selection should be based on the factors in Figures 6-14 through 6-20. Figures 6-14 through 6-18 show design criteria for selected pile types. Figure 6-19 has pile type recommendations for various subsurface conditions. Figure 6-20 shows the placement effects of pile shape characteristics.

In addition to the considerations in the figures, the conditions posed by the specific project location and topography must be considered in the selection process. Two commonly encountered conditions are:

- Driven piles may cause vibration damage to adjacent structures and property.
- Waterborne operations may permit the use of longer pile sections because longer piles can be barged to the site.

Although one pile type may emerge as the only logical choice for a given set of conditions, more often several different types may meet all the requirements for a particular structure. In such cases, the final choice should be based on an analysis that assesses the costs of the alternatives, considering uncertainties in execution, local contractor experience, time delays, cost of load testing programs, as well as differences in the cost of pile caps and other elements of the structure. The cost analysis should be based on recent bid prices. For major projects, alternate foundation designs may be included in the contract documents if there is a potential for substantial savings.

6.2.2.4 Pile Bearing Capacity

Generally, the pile length and bearing capacity are determined by the designer. See Section 10.7.3, Resistance at the Strength Limit State, in the *AASHTO Specifications* for the method of determining bearing capacity.

Where piles are driven through abutment fills, the resistance of the fill is not used in computing the pile bearing capacity. To eliminate driving resistance caused by fill material, auguring holes for piles through the fill depth should be required. The augured holes should be 2 inches [50 mm] less than the diameter of round piles or the diagonal dimension of square piles. Negative skin friction where the fill may settle can be prevented or accommodated by the following:

- The portion of the pile that will be in the fill area may be coated with bitumen to prevent bonding of the fill to the pile. This method cannot be used effectively if the pile has to penetrate a rigid stratum which could damage the coating during the driving.
- Pile size may be increased to accept the additional load.
- Pile may be driven in a preaugured hole of larger diameter than the pile shaft and the gap filled with bentonite slurry. Bentonite exhibits low friction characteristics and will limit the negative friction force.
- The number of piles may be increased to accommodate the increased load from negative skin friction.

Figure 6-14
Design Criteria for Piles – Timber

Considerations	Criteria
Length	30 – 60 ft. [9 – 18 m]
Material Specifications	ASTM D25
Maximum Stresses	
Design Loads	Up to 25 tons [225 kN] (compression only; do not include bending moment)
Disadvantages	• Difficult to splice • Vulnerable to damage from hard driving • Tip may have to be protected • Vulnerable to decay when piles are intermittently submerged
Advantages	• Comparatively low initial cost • Permanently submerged piles are resistant to decay • Easy to handle
Remarks	Best suited for friction pile in granular material
Typical Illustration	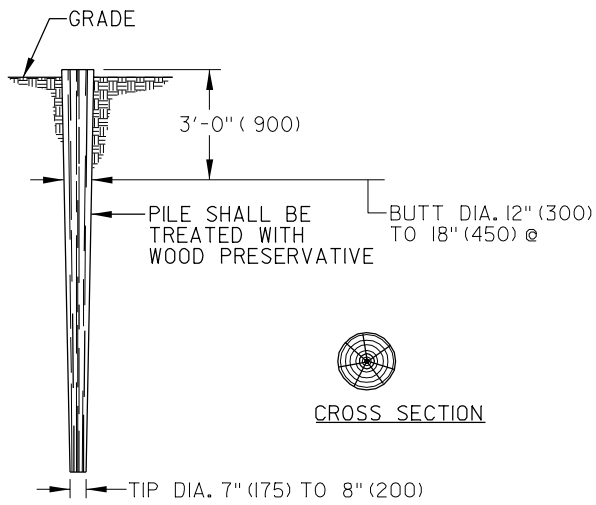

Notes:

1. Lengths and loads indicated are for feasibility guidance only. They generally represent typical current practice.
2. Design load capacity should be determined by geotechnical engineering principles, limiting stress in piles, and type and function of structure.

Figure 6-15
Design Criteria for Piles – Steel H-Sections

Considerations	Criteria
Length	40 – 100 ft. [12 - 30 m]
Material Specifications	ASTM A709 Grade 250
Maximum Stresses	
Design Loads	10 in [250 mm] = 55 tons [500 kN] 12 in [300 mm] = 65 tons [600 kN]
Disadvantages	• Vulnerable to corrosion where exposed • HP section may be damaged or deflected by major obstructions
Advantages	• Easy to splice • Available in various lengths and sizes • High capacity • Small displacement • Able to penetrate through light obstructions • Harder obstructions may be penetrated with appropriate point protection or where penetration of soft rock is required
Remarks	• Best suited for end bearing on rock • Reduce allowable capacity for corrosive locations
Typical Illustration	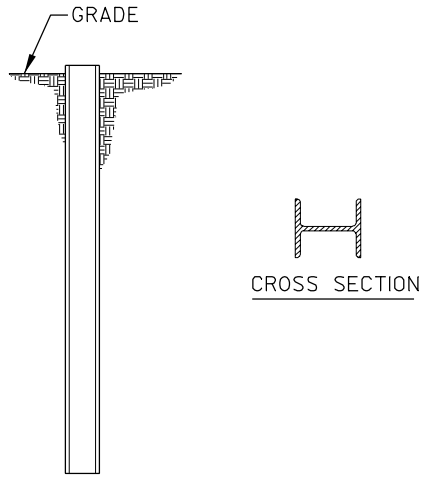

Figure 6-16
Design Criteria for Piles – Precast-Prestressed Concrete

Considerations	Criteria
Length	60 – 100 ft. [18 - 30 m]
Material Specifications	ACI 318 for concrete AASHTO M31M for reinforcing steel
Maximum Stresses	
Design Loads	General loading range is 40 to 400 tons [355 to 3500 kN]
Disadvantages	• Relatively high breakage rate, especially when piles are to be spliced • Considerable displacement • Difficult to splice
Advantages	• High load capacities • Corrosion resistance can be attained • Hard driving possible
Remarks	Cylinder piles in particular are suited for bending resistance
Typical Illustration	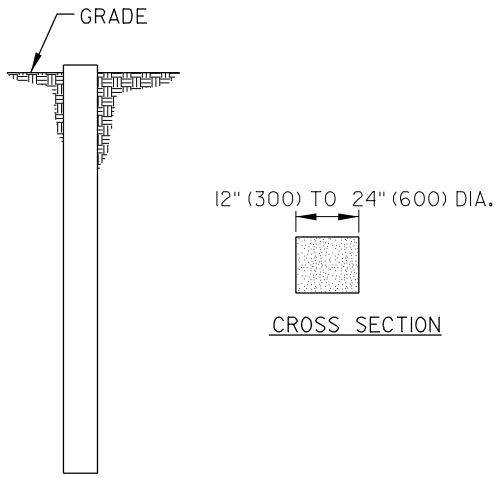

Figure 6-17
Design Criteria for Piles – Cast-in-Place Concrete

Considerations	Criteria
Length	30 – 80 ft [9 - 24 m]
Material Specifications	ACI 318 for concrete
Maximum Stresses	
Design Loads	12 in [300 mm] = 55 tons [500 kN] 14 in [350 mm] = 65 tons [600 kN] 15 in [400 mm] = 80 tons [700 kN]
Disadvantages	Considerable displacement
Advantages	• Can be re-driven • Shell not easily damaged
Remarks	Best suited for friction piles of medium length
Typical Illustration	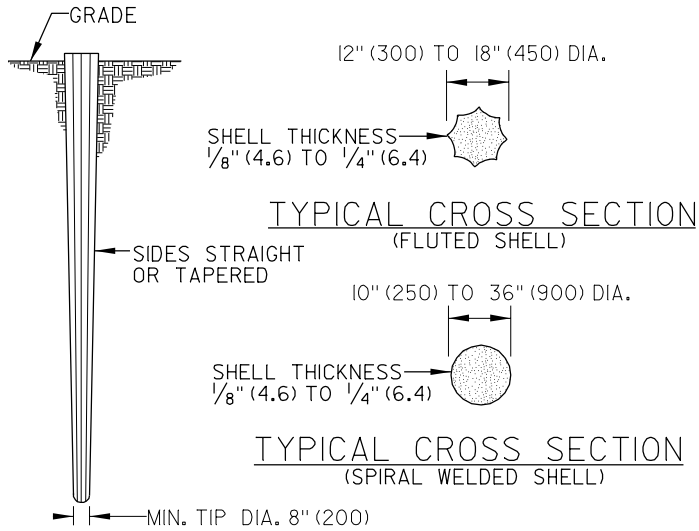

Figure 6-18
Design Criteria for Piles – Drilled Shafts

Considerations	Criteria
Length	Up to 100 ft [30 m]
Material Specifications	ACI 318 for concrete
Maximum Stresses	33% of 28-day strength of concrete
Design Loads	145 to 1000 tons [1300 to 9000 kN]
Disadvantages	• Construction procedures are critical to quality • Boulders can be a serious problem, especially in small diameter shafts
Advantages	• Economy • Complete nondisplacement • Minimal driving vibration to endanger adjacent structures • High skin friction • Good contact on rock for end bearing • Convenient for low-headroom underpinning work • Visual inspection of augered material • No splicing required • High bearing capacity • Availability of several construction methods • Can be continued above ground as a column
Remarks	• Best suited as a high capacity end bearing pile • Suited for installation in stiff clays
Typical Illustration	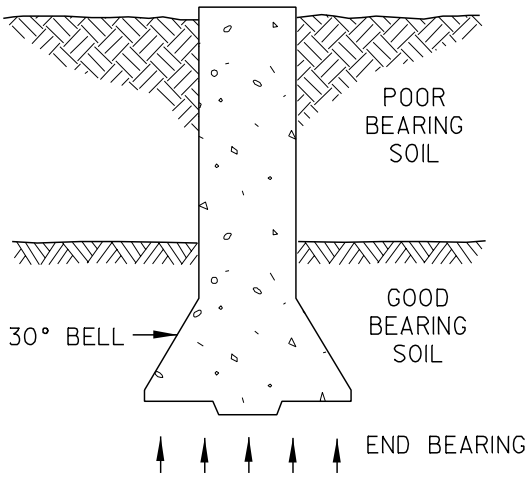

Figure 6-19
Guide to Pile Type Selection for Subsurface Conditions

Typical Problem	Recommendations
Boulders overlying bearing stratum	Use heavy nondisplacement pile with a point and include contingent pre-drilling bid item in contract.
Loose cohesionless soil	Use tapered pile to develop maximum skin friction.
Negative skin friction	Use smooth steel pile to minimize drag adhesion. Avoid battered piles. Use bitumen coating for piles.
Deep soft clay	Use rough concrete piles to increase adhesion and rate of pore water dissipation.
Artesian pressure	Caution required when driving thin-wall pile shells due to potential collapse of shell from hydrostatic pressure. Pile heave common to closed-end piles.
Scour	Do not use tapered piles unless large part of taper extends well below scour depth. Design permanent pile capacity to mobilize soil resistance below scour depth.
Coarse gravel deposits	Use prestressed concrete piles where hard driving is expected in coarse soils. Use of H-piles in these deposits often results in excessive pile lengths.

Figure 6-20
Guide to Pile Shape Effects

Shape Characteristics	Pile Types	Placement Effect
Displacement	Closed-end steel pipe pile and precast-prestressed concrete	Density cohesionless soils, remold and temporarily weaken cohesive soils. Setup time or freeze for large pile groups in sensitive clays may be up to six months.
Nondisplacement	Steel H-pile	Minimal disturbance to soil.
Tapered	Timber and fluted steel shells	Increased densification of soil, high capacity for short lengths in granular soils.

6.2.2.4.1 Resistance Factors

Resistance factors are selected based on the method of design, with modifications based on the method of controlling installation. See Section 10.5.5, Resistance Factors in the *AASHTO Specifications*.

6.2.2.4.2 Lateral Loads on Piles

In addition to axial loads, piles are expected to transmit lateral loads into the soil. This causes both shearing forces and bending moments in the pile. The designer must evaluate pile capacity considering the axial load, the lateral loads and the combination of these loads. Lateral deflections and displacement of the pile axis must be evaluated simultaneously. These lateral loads must be resisted by the stiffness of the pile or pile group through mobilization of resistance in the surrounding soil as the pile deflects. Battered piles should be evaluated for resistance of lateral loads. Any excess lateral loads then may be resisted by the vertical piles as specified below.

The lateral load should be analyzed in accordance with Section 10.7.3.8, Lateral Load, in the *AASHTO Specifications*.

6.2.2.4.3 Static Analysis

The static load capacity of a pile can be defined as the capacity of the ground to support the loads on the pile imposed by the structure. A static analysis is performed to determine the static load capacity (ultimate and design capacities) of individual piles and of pile groups. Static pile capacity computations are necessary to estimate the number of piles and the required pile lengths both for the design of substructure elements and for ordering piles of the correct length from the supplier.

The ultimate static load capacity of an individual pile and of a pile group is the smaller of:

- the structural capacity of the pile(s) or
- the geotechnical capacity of the pile(s) (i.e., the ability of the pile or pile group to transfer load to the soil medium by friction, end bearing or a combination of both).

The capacity of the soil medium surrounding the pile can be estimated by geotechnical engineering analysis using:

- the dynamic penetration test data (i.e., Standard Penetration Test) which is used most frequently or
- shear strength parameters of the soil surrounding the pile for cohesive soils.

The designer selects the type of pile needed based on the foundation report. A static analysis is performed to determine the length of piles required. The unsupported length of pile (assuming scour due to the Q_{100} storm occurred) is checked for bending. From the analysis, the ultimate capacity of the piles is checked.

Generally, two static analyses are required for a design: one to determine the number and depth of piles; and one to evaluate pile-driving resistance. The first analysis does not consider the soil located above the calculated depth of scour in determining pile capacities. The second analysis is used to evaluate the pile-driving resistance in order to establish the necessary capability of the driving equipment. In this analysis, the driving resistance from both the unsuitable soil and soil in the scour prism is considered. The first static analysis must include the appropriate resistance factor for the Q_{100} condition. The ultimate capacity for the Q_{500} condition shall be checked for the extreme event limit state.

As geotechnical analysis results are received, the pile design is analyzed by one of the following methods:

- The Nordlund Method is used for non-cohesive soils-sands and gravels. Refer to the *FHWA Manual on Design and Construction of Driven Pile Foundations*, page 141 for the method and page 177 for example calculations.

  The ultimate bearing capacity (Q_u) of a pile in homogeneous soil may be expressed by the sum of point resistance Q_p and skin resistance Q_s, or

  $$Q_u = Q_p + Q_s = q_p A_p + f_s A_s$$

  Where:
  - q_p equals the unit bearing capacity of the pile point of area A_p, and
  - f_s equals the average unit skin friction on the pile shaft of area A_s.
- For cohesive soils use the Tomlinson Method or Beta Method. Refer to pages 189 and 192, respectively, of the *FHWA Manual on Design and Construction of Driven Pile Foundations*. These methods provide satisfactory results for soft to medium clays but are not reliable for stiff clays. The use of load tests should be considered for piles in stiff clays, even if the number of piles may be less than the minimum number of piles where load tests are normally justified.

The computer program DRIVEN is available for these methods. See Chapter 12 for details.

6.2.2.4.4 Dynamic Formula

The simplest forms of dynamic formulas in use today are based on equating the energy used to the work done (i.e., a pile is moved a certain distance against the soil resistance).

Statistical comparisons have shown poor correlations and wide scatter between formula predictions and actual load tests. As a result, it is recommended that use of dynamic formulas be limited to cases where well-supported empirical correlations under a given set of physical and geological conditions are available.

The one-dimensional wave equation analysis has eliminated many shortcomings associated with dynamic formulas by providing a more realistic analysis of the pile-driving process. Wave equation analysis uses wave propagation theory to monitor the longitudinal wave transmitted along the pile axis when it is struck by a hammer's impact. As the ram impact occurs, a force pulse is developed in the pile that travels downward toward the pile tip at a constant velocity, which depends on the pile material properties. When the force pulse reaches the embedded portion of the pile, it is attenuated by soil frictional resistance along the pile. If the attenuation is incomplete, the force pulse will penetrate into the soil when the peak force generated reaches the pile tip and a reflected force pulse governed by the soil tip resistance is generated. The pile will be driven into the soil when the ram impact exceeds the ultimate soil resistance at the pile tip.

The wave equation analysis provides the following information for a given pile length penetration:

- a relationship between ultimate pile capacity and blow count per foot [meter];
- actual driving stresses in the pile and penetration;
- information to evaluate the hammer performance; and

- a determination of energy output, the stroke, and the speed of hammer in blows per minute.

6.2.2.4.4.1 GRLWEAP

DelDOT utilizes GRL's Wave Equation Analysis of Pile Driving (WEAP) for pile foundation analysis and design. This program simulates a foundation pile under the action of an impact pile hammer. The program computes the following:

- The blow count (number of hammer blows per unit length of permanent set) of a pile under one or more assumed ultimate resistance values and other dynamic soil resistance parameters, using an assumed hammer and driving system (helmet, hammer cushion, pile cushion). It is important to use appropriate, available hammers and driving system elements commonly used by DelDOT contractors.
- The axial stresses in a pile corresponding to the computed blow count.
- The energy transferred to a pile.

Based on these results, the following can be indirectly derived:

- the pile's bearing capacity at the time of driving or restriking, given its penetration resistance (blow count),
- the pile stresses during driving, and
- the expected blow count based on the computed static bearing capacity of the pile.

By considering various hammer types, driving system parameters and pile properties during a number of simulations, an optimal system can be selected.

6.2.2.4.4.2 Input Information

GRLWEAP requires input information about the pile hammer, the pile-driving system, the pile and the soil. Hammer data for most commonly encountered hammers are in the program data files. The pile driving system consists of the hammer driving cushion, helmet (including striker plate, inserts and adapters), and pile cushion (for concrete piles). Pile data required consists of total length, cross sectional area, elastic modulus, and specific weight as a function of depth. In most cases, these values are constant. Soil data should include SPT values and the assignment of damping and quake values.

6.2.2.4.4.3 Damping and Quake

Quake is the elastic compression of soil during pile driving. Damping is the loss of driving energy due to inelastic soil response. Both quake and damping occur on the surface (skin) and at the toe of the pile. Quake and damping factors suitable for preliminary analyses are included in the GRLWEAP Manual. Use Smith damping factors in most cases.

6.2.2.4.4.4 Output

Three types of output are available from the WEAP program:

- a printout that allows checking the input data;
- the actual results of the analysis; and
- program messages, including warnings, interrupt information and general information.

As with any design, the designer should be thoroughly familiar with the structural theory and the software being used. The current GRLWEAP program reduces the amount of guessing required while entering

the data while increasing the options available for selection. This provides the engineer with significant freedom in modeling during design with the intent of simulating actual field conditions. The following should be remembered in using the program:

- Bearing capacity predictions require the observation of blow counts. Wave equation results plus observed blow counts yield a bearing capacity that reflects the soil strength "at the time of testing."
- For fluted steel pile shells, the residual stress analysis (RSA) option is recommended. This will tend to make the predicted stresses and capacities higher. Underpredictions are, however, still anticipated, particularly when end-of-drive field blow counts are used instead of beginning-of-restrike blow counts.
- Good capacity correlations require restrike information.
- Average hammer performance parameters included in the hammer data file may overestimate or underestimate the actual hammer output, yielding either low or high predictions of stresses and bearing capacities.
- Properly applied, the predicted results should have an error less than 20 percent unless the pile soil system fails with different mechanisms under the static and dynamic loads.

For a complete explanation of Wave Equation theory, including computer program use, documentation and sample computations, refer to the FHWA *Manual on Design and Construction of Driven Pile Foundations* as well as GRLWEAP: Wave Equation Analysis of Pile Driving.

6.2.2.4.5 Pile Driving Analyzer

The pile driving analyzer (PDA) is an instrument which monitors the force and acceleration at the pile head during driving through the use of strain gages and accelerometers attached to the pile. Force and acceleration measurements taken near the top of a pile during impact provide the necessary information for determining:

- Bearing capacity
- Hammer performance
- Maximum driving stresses
- Pile or shaft integrity

The Department utilizes the PDA for test piles during initial drive and restrike. The PDA provides the data listed above in the field while the pile is being driven. The data from the PDA is also utilized to run the CAPWAP computer program. This program obtains a "best possible match" between measured and computed pile driving variables. The result is a more accurate prediction of bearing capacity, driving stresses and distribution of resistance.

The PDA and CAPWAP information collected during construction shall be used by the designer for production pile driving criteria.

6.2.2.4.6 Pile-Soil Interaction

Load transfer is achieved in pile foundations through pile end bearing, soil/pile friction transfer, or a combination of these two. Prior to considering the static design methods in current use for estimating pile capacity it is desirable to review: (1) events that occur in the pile-soil system during and after driving; and (2) load-transfer mechanisms.

The designer will also utilize the wave equation to evaluate pile stresses during driving, pile capacity, pile hammer capacity, driving resistances, pile tip elevations, and safe bearing values. Each use of the wave equation is good for a specific embedment length. The analysis should consider several conditions which will occur during driving:

- 5% initial driving of precast-prestressed concrete piles;
- 70% penetration;
- 90% penetration;
- 100% penetration (estimated tip elevation); and
- 110% penetration.

The analysis for the initial driving phase must include a check for tensile stresses on the pile. The occurrence of this condition will depend on the foundation soils. The Geotechnical and Design report should address this disturbance if it is pertinent.

In the case of a pile foundation, the soil below the pile cap is almost always disturbed. The degree of disturbance depends on soil type and the methods of pile placement.

Sometimes bearing is not attained at the planned pile depth. When this occurs with cast-in-place or H-piles, the piles are spliced and driving continues until the specified bearing is reached.

It is difficult to splice precast concrete or timber piles. Where bearing is not attained at the planned depth for these types of piles, driving should stop with sufficient pile length above the ground line to permit development of additional skin friction through soil "freeze" to gain pile bearing. The contractor should be required to wait at least 48 hours, or as specified by the Bridge Design Engineer, for the freezing to occur before restriking. Where a small number of piles is involved, it is better to splice and continue driving rather than waiting for freeze to occur. Restriking is permitted in soils with cohesive properties. The maximum total number of restrike hammer blows will be 20 or a maximum total penetration of 6 inches [150 mm], whichever occurs first. The hammer should be warmed up on another pile before restriking.

Restriking is the act of driving a previously driven pile at some time after initial installation was completed, usually to evaluate the occurrence of freeze or relaxation.

Freeze is the restoration of the shear strength exhibited by soils after being remolded and disturbed by pile driving which results in an increase in load-carrying capacity after driving or during interruptions in driving. This is due to changed conditions such as soil pore-water pressure changes, soil remolding, and stress redistributions in the soil.

Relaxation is the characteristic of a pile to show a decreased static capacity after driving due to changed conditions such as soil pore-water pressure changes, soil remolding, and stress redistributions in the soil.

6.2.2.4.7 Pile Load Tests

Load testing is the most accurate method of verifying pile capacity. The designer must specify the type of load test to be used. Conventional load test types are included in ASTM D1143-81 as reapproved in 1987. This test method defines procedures for testing vertical or battered piles individually or in groups to determine the response of

the pile or group to an axially applied static compressive load.

Additional methods for testing vertical or battered piles either individually or in groups include:

- the modified ASTM load test, which follows ASTM D1143-81 methods but may include modifications that must be approved by the Bridge Design Engineer;
- the ASTM D3966-90 test method, which covers procedures to determine the load-deflection relationships when the pile or pile group is subjected to lateral loads; and
- the ASTM D3689-90 test method, which covers procedures to determine the response of the pile or pile group to an axially applied static tensile load.

Before a pile load test is conducted, an economic comparison between the cost of the additional length of pile and the cost of the load test should be made. Generally, one pile load test will be conducted for each 100 piles required on a structure. Under unique circumstances, more tests may be specified. Refer to the *FHWA Manual on Design and Construction of Driven Pile Foundations*.

6.2.2.5 Pile Protection

Protection is needed for concrete piles where they are exposed. Protection should extend at least 5 feet [1.5 m] below stream bottom or ground surface. Steel piles should not be used for structures over water. Specify silane coating for concrete piles.

Soil conditions in some areas may require that Type II (sulfate-resistant) cement be used for concrete piles. The designer should check the soils report to determine if Type II cement or coatings are needed.

6.2.3 PILE-SUPPORTED FOOTINGS

Refer to the *FHWA Manual on Design and Construction of Driven Pile Foundations* for a discussion of pile-supported footings.

6.2.4 DRILLED SHAFT FOUNDATIONS

A drilled shaft is formed by boring an open cylindrical hole into the soil and subsequently filling the hole with concrete. Excavation is accomplished usually by a mobile drilling rig equipped with a large helical auger or a cylindrical drilling bucket. Once in place, a drilled shaft acts essentially like a driven pile, except that its behavior under load may differ because of the dissimilar geometries and installation techniques.

The following special features distinguish drilled shafts from other types of foundations:

- Unlike a displacement pile, the drilled shaft is installed in a drilled hole.
- Wet concrete is cast and cures directly against the soil forming the walls of the bore hole. Temporary casing may be necessary for stabilization of the open hole and may or may not be extracted.
- The installation method for drilled shafts is adapted to suit the subsurface conditions.

See Figure 6-18 for a sketch of a typical drilled shaft.

Other terminology commonly used to describe a drilled shaft includes: drilled pier, drilled caisson, and bored pile. Refer to the *FHWA Drilled Shaft Manual*.

6.2.4.1 Types of Drilled Shafts

The five categories of drilled shaft foundations are defined by their diverse methods of load transfer. Generally, the load-carrying capacity is obtained from load transfer to the soil from the shaft or the base or a combination of both, as described below.

1. Straight shaft, end-bearing drilled shaft. Load is transferred by base resistance only.
2. Straight shaft, side-wall-shear or friction drilled shaft. Load is transferred by shaft resistance only.
3. Straight shaft, side-wall-shear and end-bearing drilled shaft. Load is transferred by a combination of shaft and base resistance.
4. Belled or under-reamed drilled shaft. Load is transferred by the bell in end-bearing. Shaft resistance may be considered, depending on the dimensions of the drilled shaft and overburden material.
5. Straight or belled drilled shaft on hard soil or rock. Shaft resistance may be considered under some circumstances, with the approval of the Bridge Design Engineer.

6.2.4.2 Application of Drilled Shafts

The drilled shaft is usually employed as a deep foundation to support heavy loads or to minimize settlement. Because of the methods of construction, it is readily applied to soil above the water table, or soil that is nearly impermeable, and to profiles where rock or hard soil is overlaid by a weak stratum. With suitable construction techniques and equipment, the drilled shaft can be used in less favorable conditions. Casing or bentonite slurry can be employed to prevent caving or deformation of loose or permeable soils.

The methods of construction can be adapted to severely restricted conditions using specialized equipment. Often drilled shafts are used where piles cannot be driven due to physical overhead restrictions. Drilled shafts also have applications under certain environmentally sensitive conditions.

The geometry of the drilled shaft will be determined by the soil conditions and the performance requirements. If lateral forces have to be resisted, modifications to the structural stiffness must be made for the bending stress. The load capacity of drilled shafts is such that a single, large-diameter drilled shaft can take the place of a group of driven piles.

The flexibility of this type of foundation is such that axial and lateral loads can be resisted in a variety of soil conditions. The final decision as to whether drilled shafts are better applied to a foundation problem than driven piles must be based on the performance requirements and economic considerations. Refer to the *FHWA Drilled Shaft Manual*.

6.3 SEISMIC DESIGN AND RETROFITTING

All bridge structures in Delaware must be designed with consideration of seismic (earthquake) motion. Seismic design is not required for culverts. Each bridge will be designed considering the Seismic Performance Zone and the Acceleration Coefficient. Every bridge in Delaware must have an Importance Classification assigned.

The boundary between Seismic Performance Zone "1" and "2" is Delaware

S.R. 273. All bridges on, over or north of S.R. 273 should be designed using Zone "2", with an acceleration coefficient of 0.10 for calculations.

As bridges are rehabilitated, each must be evaluated for seismic considerations, and, with the approval of the Bridge Design Engineer, the necessary retrofitting construction will be included in the rehabilitation.

Refer to the *AASHTO Specifications* for specific criteria for seismic design.

6.4 ABUTMENT DESIGN

Abutments support the end spans of the bridge and retain the approach roadway embankment. The types of abutments used in Delaware are:

- cantilever (Figure 6-21);
- stub (Figure 6-22); and
- integral.

As noted in Section 6.2, the designer must evaluate the foundation conditions below the bottom of the footing. Where foundation conditions are acceptable, abutments on spread footings are permitted. Spread footings may be constructed on fills only with approval of the Bridge Design Engineer. Where the foundation soil cannot support the loads, piles are used to support the footing.

The designer must consider possible alternative construction sequences to assure that all loads applied to piles are considered in the design. Specifically, the placement of fill after the piles are driven can cause downdrag on the piles. Downdrag is considered a permanent load in the *AASHTO Specifications*, and shall be calculated in accordance with Section 3.11.8 of that document, applied to the appropriate load combinations. It is possible to develop negative skin friction in some soils, and the designer must consider auguring through these soils to preclude this condition. Battered piles should be avoided in negative skin friction situations because of the additional bending forces imposed on the piles. Downdrag can be reduced by specifying coating that portion of the pile subject to downdrag with bitumen.

The design compressive strengths of concrete (f'_c) are listed in Section 812 of the Delaware Standard Specifications. Specify Class A concrete (f'_c = 4,500 psi [30 MPa] at 28 days) for exposed abutments, stems, backwalls, and wingwalls and Class B concrete (f'_c = 3,000 psi [20 MPa]) for abutment and wingwall footings that are not exposed.

Figure 6-21
Cantilever Abutment Detail Example

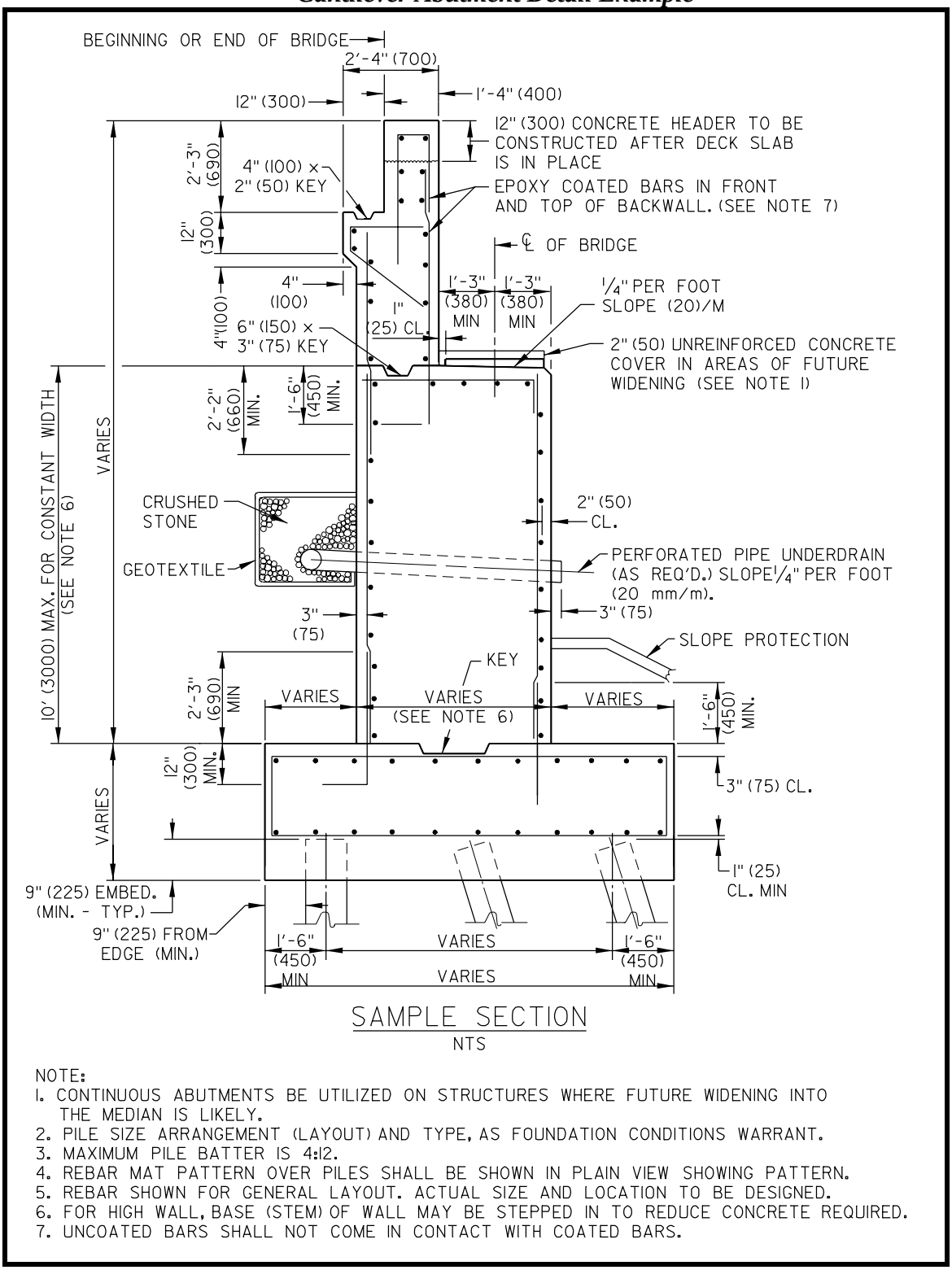

NOTE:
1. CONTINUOUS ABUTMENTS BE UTILIZED ON STRUCTURES WHERE FUTURE WIDENING INTO THE MEDIAN IS LIKELY.
2. PILE SIZE ARRANGEMENT (LAYOUT) AND TYPE, AS FOUNDATION CONDITIONS WARRANT.
3. MAXIMUM PILE BATTER IS 4:12.
4. REBAR MAT PATTERN OVER PILES SHALL BE SHOWN IN PLAIN VIEW SHOWING PATTERN.
5. REBAR SHOWN FOR GENERAL LAYOUT. ACTUAL SIZE AND LOCATION TO BE DESIGNED.
6. FOR HIGH WALL, BASE (STEM) OF WALL MAY BE STEPPED IN TO REDUCE CONCRETE REQUIRED.
7. UNCOATED BARS SHALL NOT COME IN CONTACT WITH COATED BARS.

Figure 6-22
Stub Abutment Detail Example

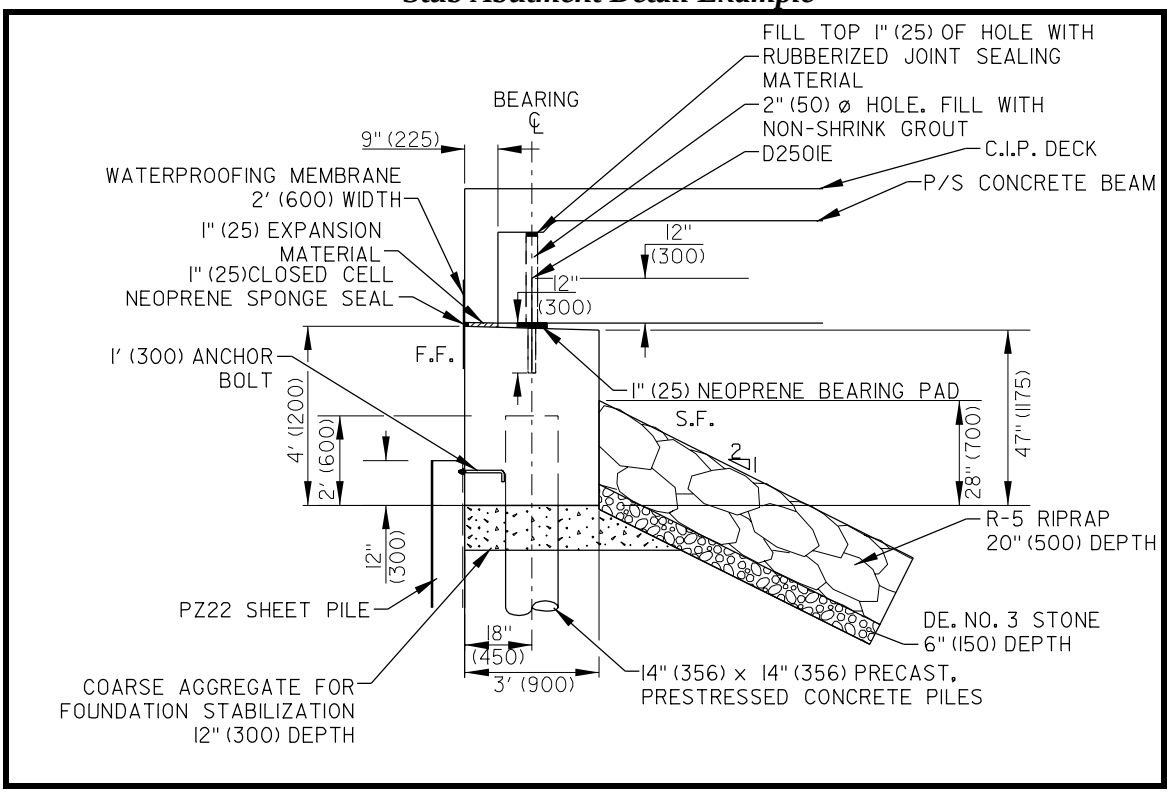

Reinforcing steel shall conform with AASHTO M31, Grade 60 [M31M, Grade 420]. The minimum cover for reinforcing steel is 2 inches [50 mm] for formed concrete. Where concrete is placed against soil, the minimum cover is 3 inches [75 mm].

6.4.1 CANTILEVER ABUTMENTS

Cantilever abutments are commonly used in Delaware. A sketch of a cantilever abutment is shown in Figure 6-21.

The breast wall provides for the reactions from the superstructure and also resists the thrust from the earth backfill. It is designed to resist this thrust as a retaining wall, cantilevered from the footing.

Wingwalls shall be carried down to the footing throughout their entire length. They may also be flared outward in plan view, depending upon the need for confinement of the earth fill. The structural action will depend upon the particular geometry. Cantilevered wingwalls will not be used because of the difficulty of compacting under the cantilevered portion of the wall.

The height of the cantilevered abutment should not exceed 25 feet [8 m]. One method to control abutment height is by lengthening the spans.

6.4.2 STUB ABUTMENTS

Stub abutments are used in situations where the need for retainment is minimal. A simplified sketch is shown in Figure 6-22.

Stub abutments are frequently built on pile foundations. In these instances, the bridge seat acts as a pile cap and must be sufficient to carry, by beam action, the loads from the bridge superstructure to the pile foundation.

Stub abutments are utilized in the majority of cases where a highway crosses another highway. A proprietary retaining wall may be placed in front of the abutment. See Section 6.6.1.4.

Where a highway crosses a stream, stub abutments may be used with steel sheeting placed behind the backwall to retain the approach fill material.

6.4.3 INTEGRAL ABUTMENTS

Integral abutments are another type of short abutment used where span lengths are short. The abutment and deck are poured monolithically, thus the name. The abutment normally encases the tops of the piles. This type of abutment is free to rotate because only a single row of plumb piles is used. Integral abutments may be used with the permission of the Bridge Design Engineer for structures with 30-degree skews or less.

6.4.4 DESIGN METHODOLOGY

A well-designed abutment provides safety against the possibility of overturning about the toe of the footing, against sliding on the footing base and against crushing of foundation material or overloading of piles. Abutments shall be proportioned in accordance with Section 11.5, Limit States and Resistance Factors, in the *AASHTO Specifications*.

6.4.5 DESIGN LOADS

The forces acting on an abutment are summarized in Section 3, Loads and Load Factors, in the *AASHTO Specifications*.

6.5 PIER DESIGN

There are multiple criteria and considerations to be evaluated in selecting the most economical and structurally appropriate type of pier to be designed. These include:

- separate or continuous footings;
- footing size;
- type of pier-column, solid shaft or hammer-head;
- number, spacing and size of columns;
- shaft dimensions; and
- cap size.

All of the forces that act on abutments also must be considered in the design of piers. In addition, stream, ice and drift forces must be considered. Refer to Section 3, Loads and Load Factors, in the *AASHTO Specifications*.

6.5.1 FRAME AND MULTI-COLUMN PIERS

Generally, one- and two-column piers are not to be considered due to the lack of redundancy. In certain situations, (i.e., very tall, very large columns) they may be viable.

The minimum pier column diameter is 2'-6" [750 mm] with 3'-0" [900 mm] preferred. Loading conditions may dictate a larger column.

Multiple-column piers are more economical in normal highway-over-highway construction, round columns being the most economical column type. Depending on the pier length, three or more columns are usually used.

6.5.1.1 Reinforcement

Care should be used in spacing vertical column bars to avoid excessive interference with the pier cap reinforcement. Double rows of column bars or large-diameter columns should be considered to alleviate this problem.

All spiral steel used for column reinforcing will be extended into the footing to the point of tangency of the vertical column reinforcement and into the cap a minimum of 6 inches [150 mm] to increase seismic resistance. Maintain the same pitch as in the column. See Figure 6-23 for details.

6.5.1.2 Construction Joints

If pier columns are over 30 feet [9 m] high, a construction joint should be placed at approximately mid-height.

6.5.1.3 Column Spacing

Columns should be spaced far enough apart to be appealing to the eye. The minimum center-to-center spacing is 15 feet [5 m].

6.5.1.4 Pier Caps

Pier caps should be proportionally sized to the columns. The minimum width of a cap is 2'-10" [865 mm] or the diameter of the column plus 4 inches [100 mm], whichever is greater.

Figure 6-24 provides specific dimensional relationships between elements for overpass structures.

Figure 6-23a
Seismic Reinforcement for Columns

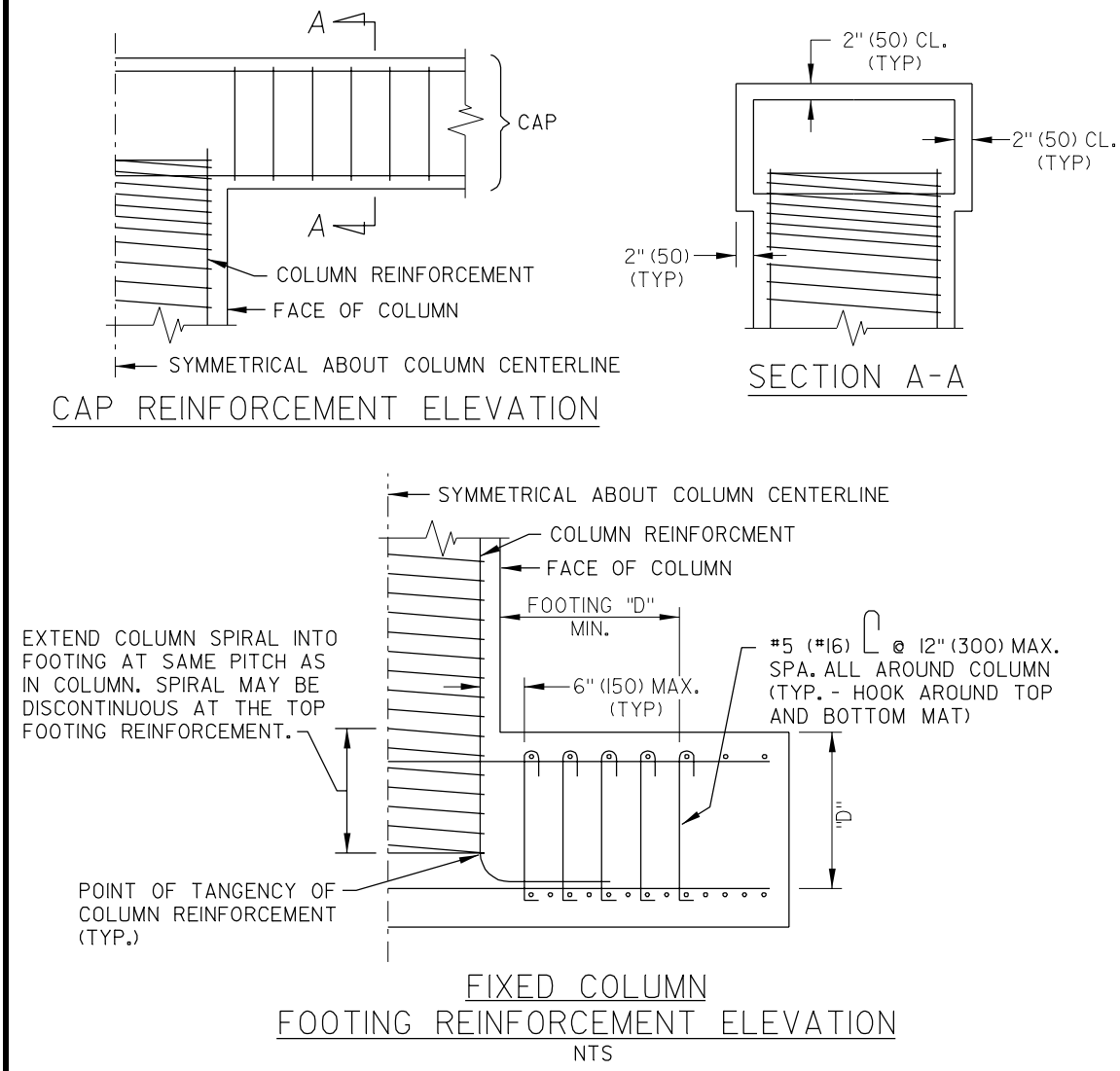

Figure 6-23b
Seismic Reinforcement for Columns

Notes to Designers:

1. #5 [#16] bars @ 12 in [300 mm] spacing is minimum equivalent required.

2. The minimum top flexural reinforcement for footings shall be that required to resist loads which cause tension in the top fiber.

3. Locations for permissible discontinuities in spiral reinforcing must be shown on the plans.

4. The thickness of the expansion joint filler should allow maximum column deflection without crushing the edge of the column concrete against the footing and should have a minimum thickness of 0.5 in [13 mm].

Figure 6-24a
Reinforced Concrete Pier Example

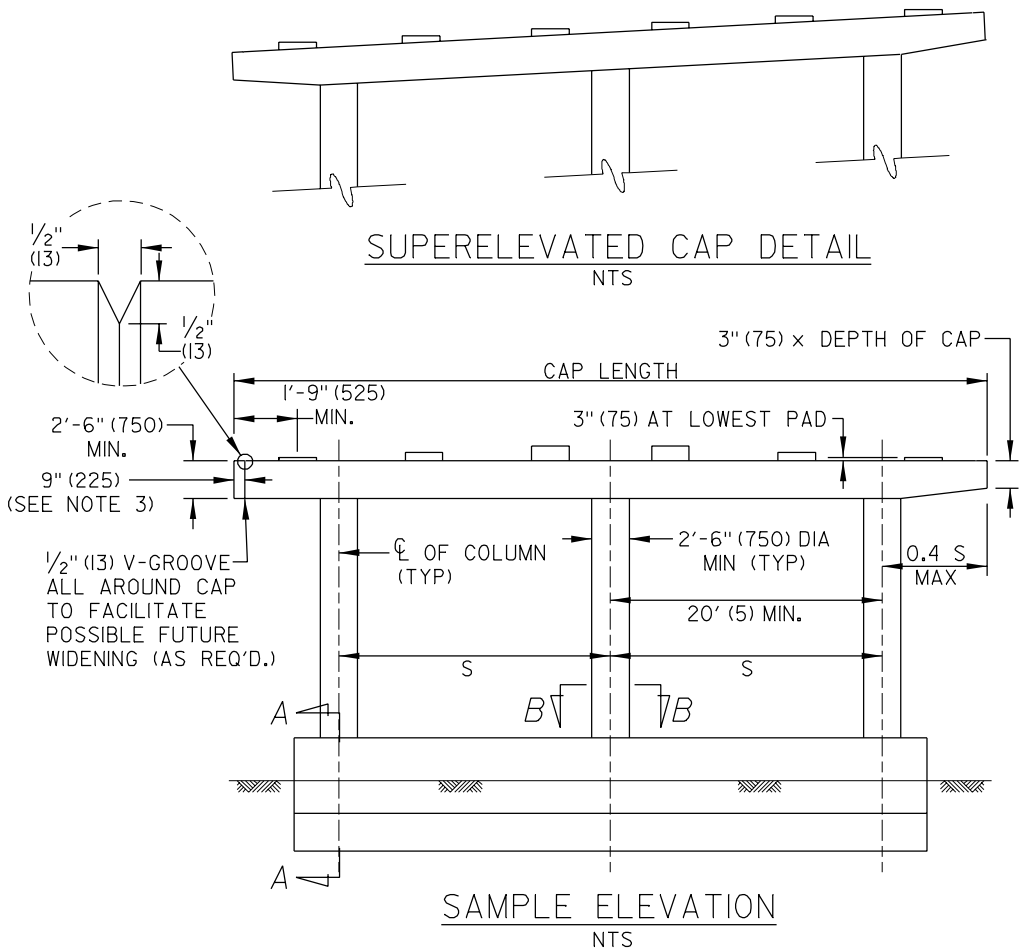

NOTE:
1. STANDARD IS FOR ROADWAY WIDTHS AND SKEW ANGLE REQUIRING A CAP LENGTH OF UP TO 60' (20), MEASURED ALONG CENTERLINE OF PIER.
2. WHEN BRIDGE SEAT ELEVATIONS ARE SUCH THAT THE HEIGHT OF ANY PAD BECOMES GREATER THAN 12" (300) AND THE SLOPING OF THE CAP CAN ELIMINATE OR ALLEVIATE THIS CONDITION, THEN THE CAP SHALL BE SLOPED AS INDICATED IN THE "SUPERELEVATED CAP DETAIL".
3. ALL MAIN BARS TO BE EXTENDED INTO THIS AREA SO THAT MECHANICAL EXTENSION CAN BE UTILIZED. DESIGNER MUST KEEP IN MIND, THIS MIGHT NECESSITATE MORE STEEL THAN REQUIRED FOR ORIGINAL DESIGN.
4. BOTH ENDS OF PIER CAP TO BE TAPERED EXCEPT WHERE FUTURE BRIDGE WIDENING IS ANTICIPATED, IN WHICH CASE, BOTH ENDS SHOULD BE SQUARE AND THE END TO BE WIDENED SHOULD BE DETAILED AS SHOWN ABOVE.
5. ALL DIMENSIONS ARE IN INCHES AND MILLIMETERS.

Figure 6-24b
Reinforced Concrete Pier Example

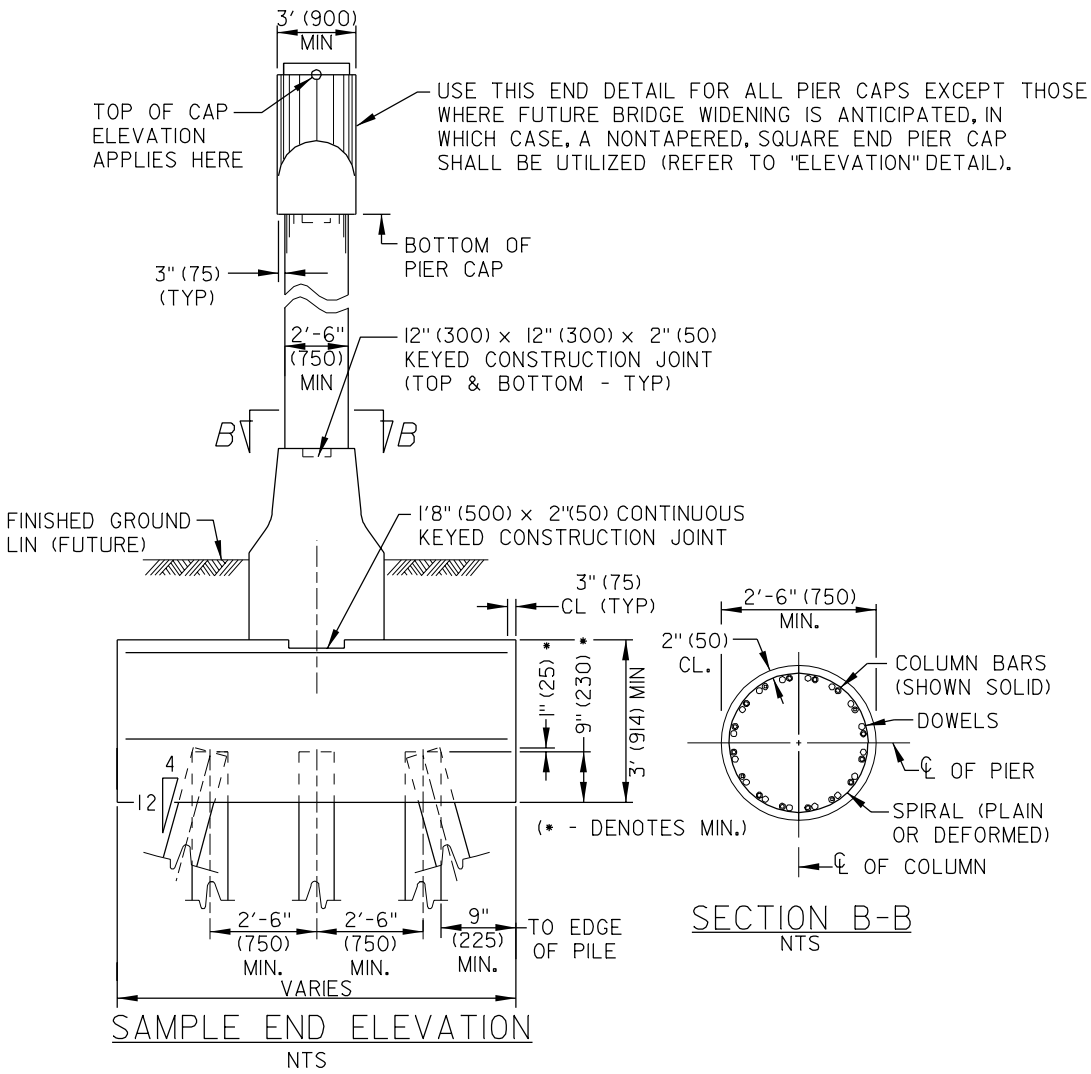

NOTE:
1. PILE SIZE, ARRANGEMENT (LAYOUT) AND TYPE, AS FOUNDATION CONDITIONS WARRANT.
2. BATTER PILES AS NECESSARY (MAXIMUM PILE BATTER IS 4:12).
3. REBAR MAT PATTERN OVER PILES SHALL BE SHOWN IN PLAN VIEW SHOWING PATTERN.
4. REBAR SHOWN FOR GENERAL LAYOUT, ACTUAL SIZE AND LOCATION TO BE DESIGNED.

Figure 6-24c
Reinforced Concrete Pier Example

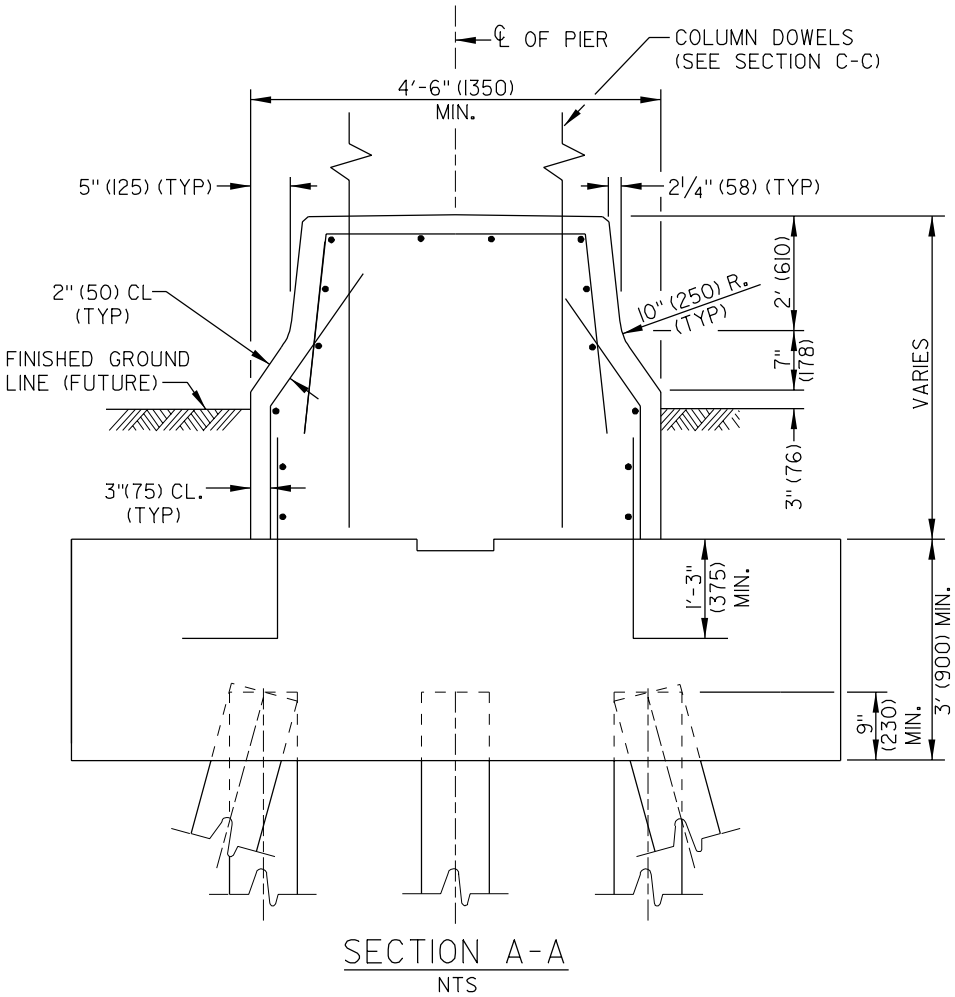

NOTE:
1. REBAR SHOWN FOR GENERAL LAYOUT ONLY.
2. ALL BARS IN PEDESTAL SHALL BE EPOXY COATED.

6.5.2 SOLID OR HOLLOW SHAFT PIERS

Where space for large footings and multiple column piers is limited or columns are very high, solid or hollow shaft columns can be considered. Aesthetic treatment is preferred for massive concrete elements.

6.5.3 PILE BENTS

Pile bents have most recently proven to be the most economical type of pier. They are generally most suited for structures crossing rivers, of low- to mid-level clearance and multi-span structures.

Where piles are subject to wet and dry cyclic exposure, only concrete piles with pile protection are used. The protective coating is applied to the surface of precast-prestressed concrete piles after the pile is cast. Steel shell piles are not used in water because of durability and environmental impacts involving maintenance cleaning and painting.

Generally, precast-prestressed concrete piles are more economical than fluted steel shells or pipe piles. Precast-prestressed concrete piles are fabricated in one piece to a length defined by the designer. It is preferred that they are not field spliced. Where piles can be barged to the construction site, piles in excess of 100 feet [30 m] in length can be used. Where piles must be driven to an elevation lower than the bottom of the cap to achieve bearing, cap heights may be increased.

The minimum pile size is 18 inches [450 mm], either in diameter or square.

Point of Fixity. Piles are frequently extended above ground level to form frame support structures such as piers and bents. Their design is performed using standard structural design concepts. The principal problem in the design of these structures is the bending and buckling of the partially embedded piles. In evaluating possible buckling of a partially embedded pile and in performing frame analyses, it is necessary to estimate the lower condition of fixity. The term fixity indicates restraint against rotation only. See Figure 6-25.

The effective length equals KH for analysis of allowable axial loads. See Figure 6-26 for the recommended design values for K. These values are for a pile assumed to be fixed at the bottom.

The depth of the point of fixity can be computed for uniform coarse- and fine-grained soils by the following equations. If the soil profile is not uniform, a more detailed analysis is required. Software, such as COM624P or STAAD, may be used for the analysis. Refer to Chapter 12.

Where a soft layer overlays a hard layer, fixity is difficult to attain. The designer may use a hinged design with approval of the Bridge Design Engineer. The stability of the structure must be carefully investigated.

6.6 RETAINING WALL DESIGN

Retaining walls are designed to withstand lateral earth and water pressures including live and dead load surcharges, the weight of the wall, temperature and shrinkage effects, and earthquake loads in accordance with Section 11.5, Limit States and Resistance Factors, in the *AASHTO Specifications*.

Passive pressure resistance to sliding from soil in front of the wall will not be considered without permission from the Bridge Design Engineer.

See Chapter 12 for available computer software for the design of retaining walls.

Figure 6-25
Point of Fixity

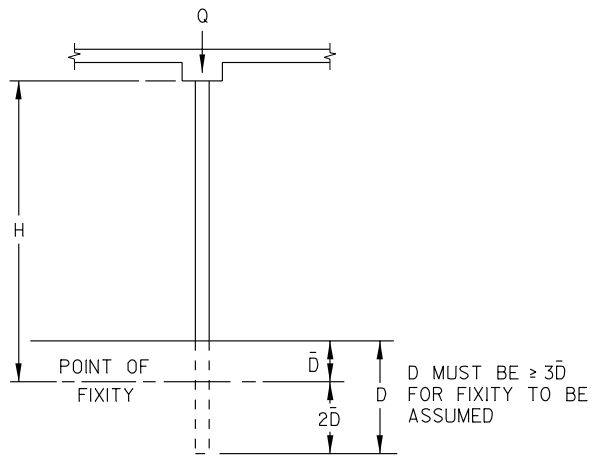

Note: This figure was adapted from Table C1.8.1, *Specification for the Design, Fabrication and Erection of Structural Steel for Buildings*, November 1, 1978, with permission of the American Institute of Steel Construction.

Figure 6-26
Recommended K Values

DIRECTION	LONGITUDINAL		TRANSVERSE	
LOCATION TYPE	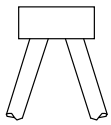 2 ROWS BATTERED	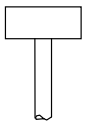 SINGLE ROW	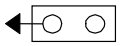 BATTERED END	PLUMB PILE
RECOMMENDED DESIGN K VALUE	0.65	1.6	0.65	1.2

Note: Adapted from "Lateral Resistance of Piles in Cohesionless Soils," by Bengt B. Broms, Volume 90 No. SM3, Part I, *Journal of the Soil Mechanics and Foundation Division*, Proceedings of the American Society of Civil Engineers, May 1964, and reproduced by permission of ASCE.

6.6.1 TYPES

The following are some commonly used types of retaining wall structures available for the designer to consider in a specific design:

- Post and Plank Walls
- Sheet Pile Walls
- Reinforced Concrete Walls
- Proprietary Retaining Walls

6.6.1.1 Post and Plank Walls

Post and plank walls consist of steel H-piles driven or augured at designated spacings. The piles may be tied back using drilled or grouted type anchors. The spaces between the piles are spanned with structural elements such as wood, reinforced concrete lagging, precast or cast-in-place concrete panels or steel members, to retain the soil.

6.6.1.2 Sheet Pile Walls

Sheet piling walls may be either cantilever or anchored design. Sheet piling is driven in a continuous line to form a wall. In cantilever design, fill is then placed and compacted behind the wall. Cantilever walls are generally limited to 15 feet [5 m] in height. In anchored design, deadmen or piles are then constructed, and the sheeting wall is anchored to them using tie rods.

6.6.1.2.1 Steel Sheet Piles

Steel sheet piles are used for both temporary and permanent construction. Both tied-back and cantilever designs are allowed. The contractor is responsible for the design of temporary structures, with approval of the designs by the Department.

Where steel sheeting is used as permanent construction, a coating is required. Where a cap is required, a concrete cap is preferred.

A690 sheet piles should be used in marine environments such as tidal areas.

A709 Grade 36 [A709M Grade 250] and A709 Grade 50 [A709M Grade 345] sheet piles are used in non-marine environments. Both types are always coated.

Steel sheet pile retaining walls are used as sea walls and for similar types of shore protection such as flood walls, levees, and dike walls used to reclaim lowlands.

In no situation will an abutment be constructed using driven steel sheet piling as support for the structural loads.

Designers should refer to the AISC *Sheet Piling Design Manual*.

A computer program, CWALSHT, is available for design and analysis of steel pile walls by classical methods. The program was developed by the Corps of Engineers. See Chapter 12 of this manual for details.

6.6.1.2.2 Concrete Sheet Piles

Concrete sheet piles are precast, prestressed concrete members designed to carry vertical loads and lateral earth pressure which act as abutments. These members are connected by a keyed vertical joint between two adjacent sheets. Geotextile fabric or suitable joint sealer is used to prevent loss of backfill material through these joints. The sheets are driven to ultimate bearing capacity using water jets except that the last 12 to 15 feet [3.6 to 4.6 m] are driven using suitable hammer. The use of concrete sheet piles is permissible in sandy soils only, with approval from the Bridge Engineer.

6.6.1.3 Reinforced Concrete Walls

Reinforced concrete walls are constructed using cast-in-place or precast concrete elements. They may be constructed on spread footings or founded on piles. They derive their capacity through combinations of dead weight and structural resistance.

6.6.1.4 Proprietary Retaining Walls

Proprietary retaining walls are patented systems for retaining soil. Two types of systems used in Delaware are gravity and mechanically stabilized. Gravity walls generally use interlocking, soil-filled reinforced concrete bins or modular blocks to resist earth and water pressures; they depend on dead weight for their capacity. Mechanically stabilized walls use metallic or polymeric tensile reinforcement in the soil mass and modular precast concrete panels to retain the soil.

In locations where retaining walls are needed to reduce span lengths or facilitate construction, proprietary walls may be considered. Consideration of economics, location, construction requirements, and aesthetics should be included in the evaluation. These walls have proven to be very economical to build, especially for long abutments. They should also be considered when constructing a dual highway over secondary side roads. This type of construction can also reduce span lengths, thus saving on superstructure construction costs. Proprietary retaining walls can be economical where high wall heights are dictated by field conditions.

Locations where proprietary walls should be considered are based on the following requirements:

- readily available required backfill material,
- available site construction working area, and
- insufficient right-of-way.

All abutments constructed behind proprietary retaining walls will be founded on piles. Spread footings will not be permitted. Proprietary retaining walls are used to retain earth and do not carry vertical structure loads. Abutments are still used to support all longitudinal loads.

Each design location must be evaluated based on the advantages and disadvantages of the specific construction being considered. This is particularly important when a mechanically stabilized wall is being considered for a roadway crossing over a waterway. Close consideration must be given to long-term stability, stream flow, and storm flows. Positive erosion control in addition to geotechnical fabric is needed. These walls should not be used in tidal areas or other locations where water might reach the wall.

When proprietary retaining walls are included in a project, special provisions must be included in the contract documents to guide the suppliers. The wall suppliers provide all required engineered designs of the structural wall. Suppliers' designs are included in the plans. The contractor selects a supplier's design and submits a bid accordingly.

Proprietary walls that are currently approved for use in Delaware are listed below. Other walls may be approved by the Bridge Design Engineer.

- Double Wall™ (gravity wall)
- VSL™ (mechanically stabilized)
- Reinforced Earth™ (mechanically stabilized)

6.7 APPROACH ROADWAY EMBANKMENT

In many cases, approach roadways are constructed on embankments. When embankments are constructed over soft soils, the designer shall consider the potential for settlement and slope stability problems. Embankment slopes also require protection from erosion.

6.7.1 SETTLEMENT

Often the major design consideration when faced with a settlement problem is the time for the settlement to occur. Low-permeability clays and silt-clays can take a long time to consolidate because the water must be squeezed out before the consolidation is complete.

The two most common methods of accelerating settlement are:

- applying a surcharge; and/or
- the use of sand or wick drains in the subsoil.

Surcharges involve building the embankment above the final grade elevation and allowing it to remain for a period of time, typically 3 to 12 months. The length of the waiting period can be estimated from consolidation test data. The actual settlement occurring is monitored with geotechnical instrumentation. When the settlement with the surcharge equals the settlement originally estimated (without the surcharge) and the rate of settlement is reduced to an acceptable level, the surcharge may be removed. (Refer to Figure 6-27.) The designer may also use the surcharge load or duration to achieve secondary settlement. The designer should specify the following:

- the estimated time to achieve settlement,
- the total settlement,
- the desired rate of settlement, and
- the rate of placement of the surcharge.

The stability of the embankment must be checked against slope failure to ensure that an adequate factor of safety exists to permit placement of the surcharge load. It may be necessary to specify the rate of placement of the surcharge or stage surcharge construction to control the pore pressure in the soils and maintain stable slopes. Piezometers and settlement platforms are installed at various locations in the fill to monitor pore pressures during the loading and consolidation phases. Locations for these will be established by M&R.

Some highly plastic clays of extremely low permeability can take many years for settlement to be completed. When surcharging alone is not effective in reducing settlement time sufficiently, wick drains can be used to accelerate the settlement; because of the increased cost, wick drains should be used only when this condition exists. These drains accelerate the settlement process by shortening the drainage path for the water to escape from the soil, as shown in Figure 6-28. When wick drains are needed, the designer should request that M&R prepare the design.

Figure 6-27
Surcharge Settlement vs. Time

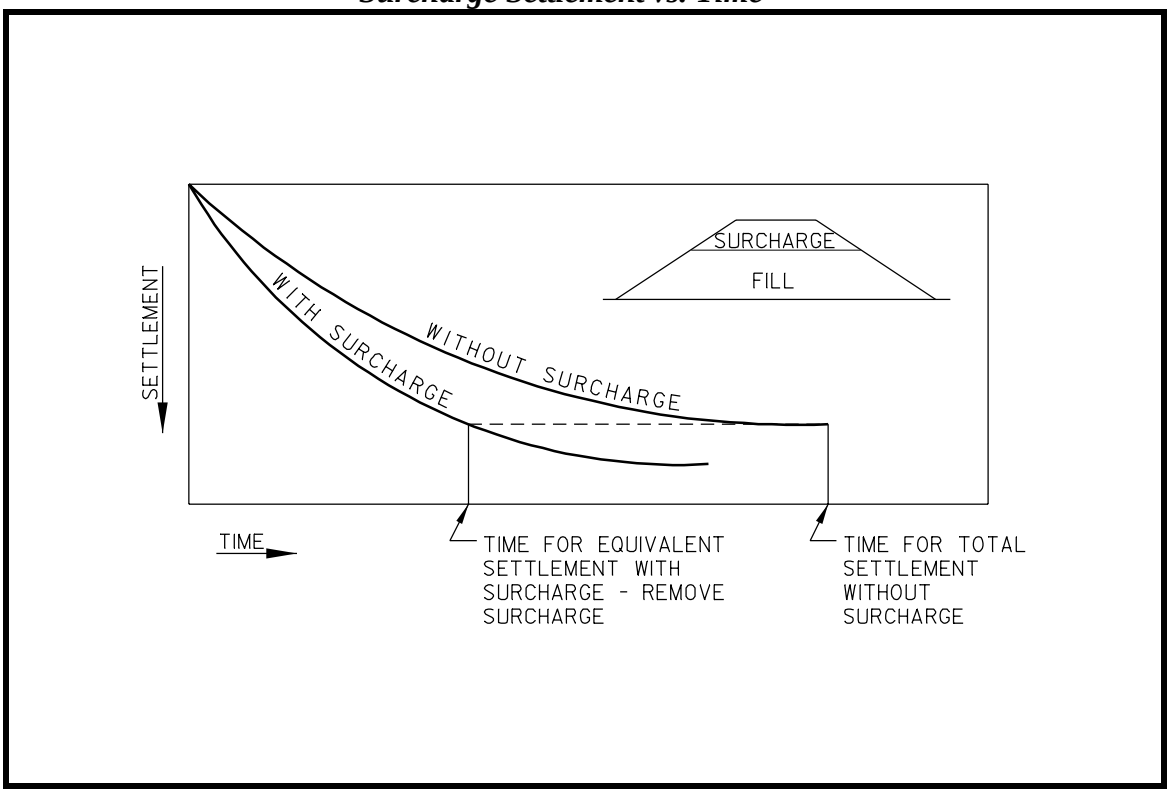

Figure 6-28
Wick Drains

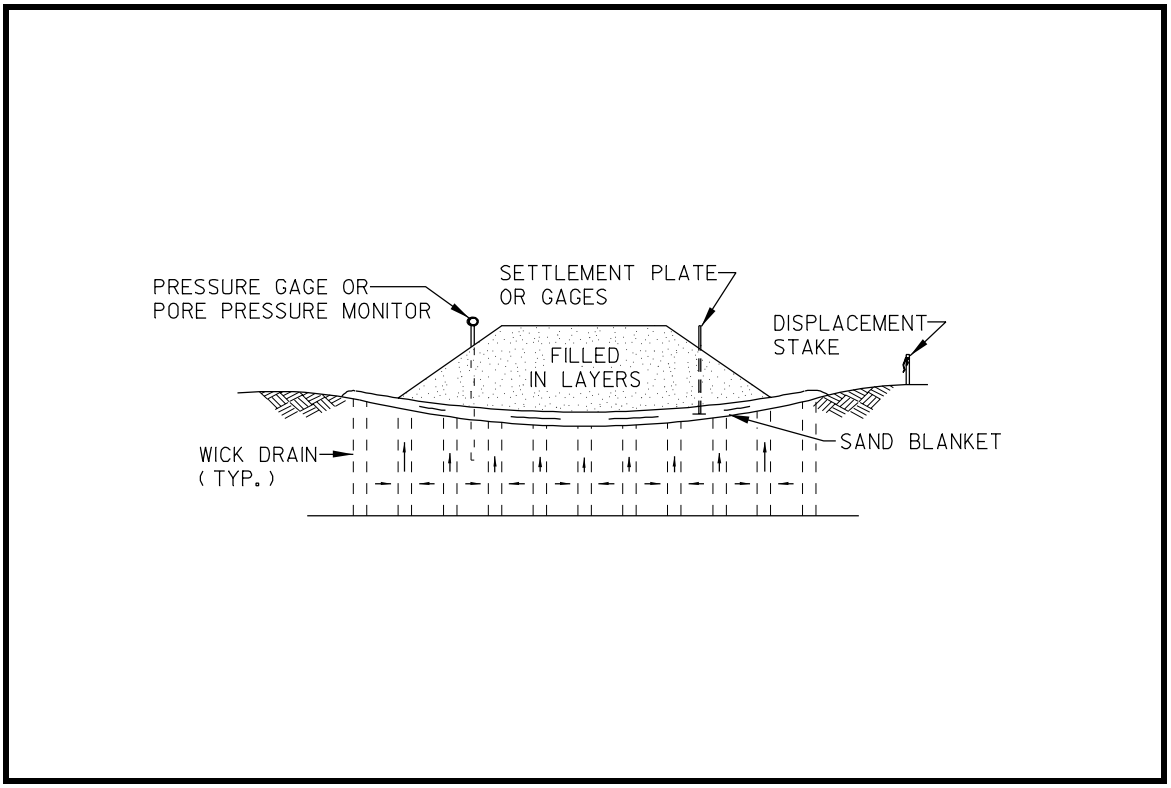

6.7.2 SLOPE STABILITY

Designers must be aware of potential slope stability problems and request that M&R check potential problem areas. There are three major types of stability problems that should be considered in the design of approach embankments over weak foundation soils: circular arc failure, sliding block failure, and lateral squeeze of foundation soils. These are shown in Figures 6-29 through 6-31.

Computer software PCSTABL6 is available in the Bridge Section and M&R to analyze slopes and bridge approach embankments for stability. Refer to Chapter 12. The applications and analysis methods are summarized in Figure 6-32.

End slopes beneath bridge abutments, major retaining walls and other locations where slope failure would result in significant damage shall be designed in accordance with Section 10.5.2, Service Limit States, in the *AASHTO Specifications*.

Figure 6-29
Circular Arc Failure

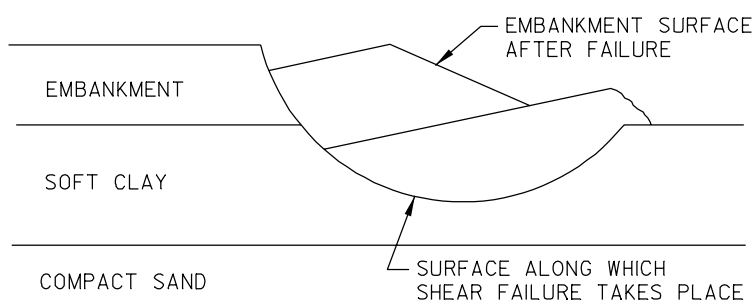

Figure 6-30
Sliding Block Failure

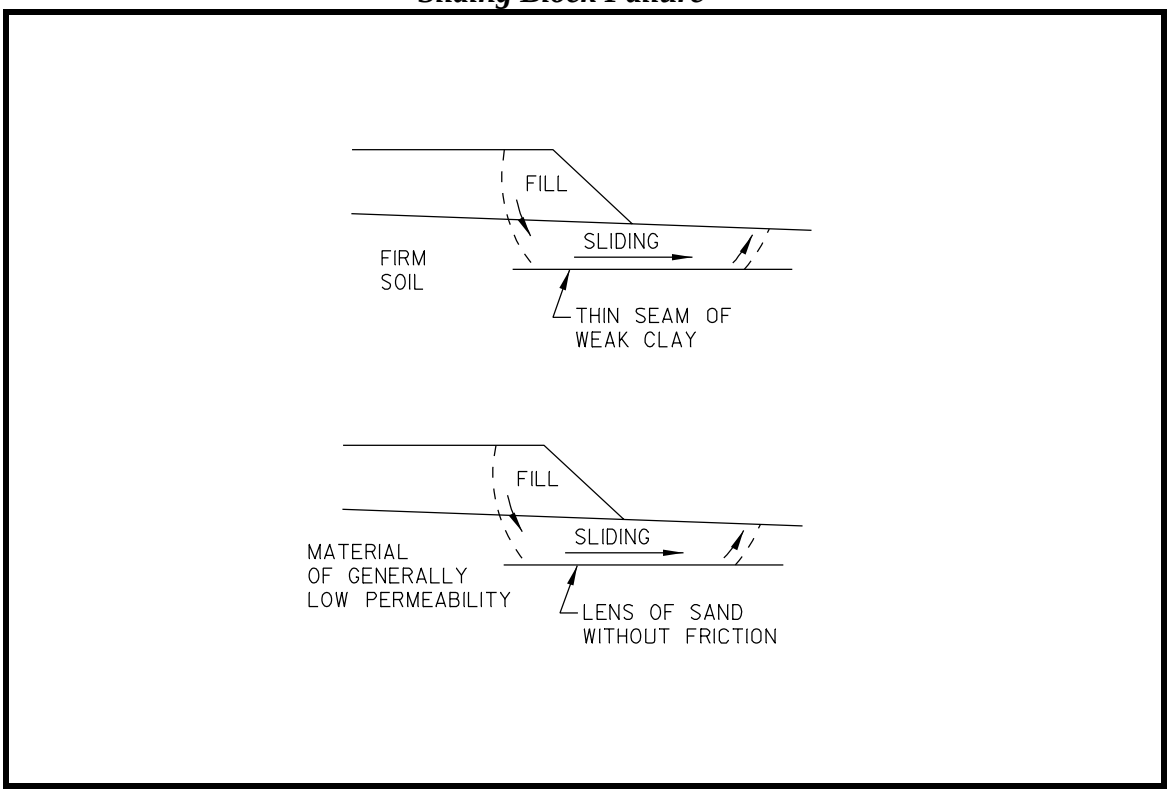

Figure 6-31
Lateral Squeeze of Foundation Soil

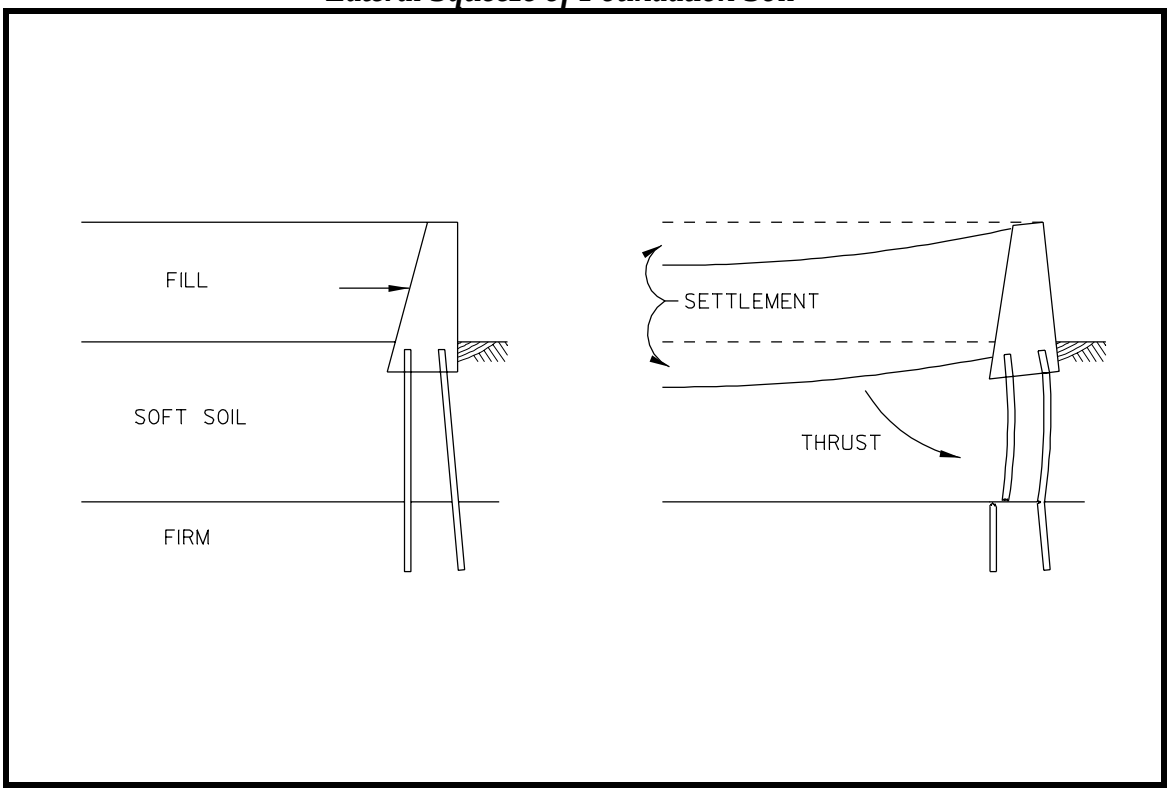

Figure 6-32
Slope Stability Software Applications

Software	Method	Application
FHWA PCSTABL6	1. Simplified Bishop	Circular shaped failure surface
	2. Janbu	General shaped failure surface (non-circular)
	3. Spencer method of slices	Any type of surface failure
	4. Sliding block	Weak layer or strong layer

6.7.3 SLOPE AND BANK PROTECTION

Slope protection or bank protection is placed for several reasons. The primary purpose is to protect the embankment or slope from erosion. The primary cause of erosion is stream action, but it may also be caused by stormwater runoff.

6.7.3.1 General

To design bank protection properly, knowledge of how the bank fails is important. The ways in which banks fail are:

- erosion of soil particles by river currents, waves or scour;
- bank sloughing caused by internal hydrostatic pressure in the bank materials;
- slip-circle failure undermining the toe; and
- liquefaction.

The goal is to protect the embankment and to define the flow area through the stream crossing. Where channels are expected to remain stable or where the embankment (bridge berm) is set back from the stream bank with only minor constriction at lower frequencies, it is not necessary to protect the bank, but consideration should be given to protecting the bridge berm at the design frequency flow. At sites where the embankment coincides with the stream bank or is practically an extension thereof, protection of both the stream bank and embankment is recommended.

Where the abutments of dual structures are separated by at least 15 feet [4.5 m] of clear space, the stone slope protection need not be continuous between the abutments. This will be decided on a case-by-case basis.

In addition to bank protection, each substructure unit must be designed (or protected) following the latest scour considerations. It is not economically feasible to construct all bridges with absolute invulnerability from scour damage. Every bridge must be evaluated to determine the prudent scour prevention measures to be taken. The problems associated with estimating scour and providing cost-effective and safe designs are being addressed in current research

programs. Currently, there are guidelines and publications available for designing scour protection and structures which resist scour. Refer to Chapter 3 of this manual. Also refer to *HEC-18, Evaluating Scour at Bridges*; *HEC-20, Stream Stability at Highway Structures*; *HEC-23, Bridge Scour and Stream Instability Countermeasures;* and the most recent research for state-of-the-art guidance.

6.7.3.2 Geosynthetics

Geosynthetics are permeable and nonpermeable polymer textile materials used in conjunction with soil and rock to provide one or more of the following functions:

- barrier;
- separation;
- filtration;
- drainage; and
- reinforcement.

Geosynthetics have been successfully used in the following highway applications:

- drainage;
- temporary and permanent erosion control;
- temporary and permanent pavements;
- embankments over weak foundations; and
- reinforced slopes and walls.

Design of geosynthetics is required for each application. Design and construction monitoring guidelines are in the publication *FHWA-HI-90-001, Geotextile Design and Construction Guidelines*.

6.7.3.3 Rock Riprap

The most common method of bank or slope protection is rock riprap. The sides of the bank or embankment are lined with large rocks to prevent erosion along the bank and at the toe. Rock riprap protection has advantages in that it is flexible and local damage is easily repaired. Appearance of the rock riprap is natural, and, in time, vegetation will grow between the rocks. Also, wave run-up on rock slopes is usually less than for other types of protection. Construction must be accomplished in a prescribed manner to assure proper behavior. The following factors should be considered in the design of rock riprap protection:

- the durability and density of the rock;
- the magnitude and direction of stream velocity;
- the angle of the side slopes;
- the size of the rock; and
- the shape and angularity of the rock.

Filter blankets are used as reverse filters to prevent piping damage to the riprap caused by movement of small particles up through the larger stone as a result of decreased hydrostatic pressure from flowing water. Stone bank protection should terminate with a buried toe.

Design guides for estimating rock size for channel and stream bank protection are included in Chapter 3 of this manual and *HEC-23, Bridge Scour and Stream Instability Countermeasures*.

Specify a minimum 1'-6" [450 mm] thick blanket for embankment protection and 2'-0" [600 mm] thick for slope protection along stream banks and for streambeds. The specifications for riprap are provided in

Section 712 of the *Standard Specifications*. Where unusual problems are anticipated or the adequacy of ordinary practice is uncertain, a complete detailed design of the riprap gradation and filter blanket is recommended. Typical riprap details and examples of riprap installations are found in Chapter Three.

See Chapter Two for more information.

Check with Environmental Studies if topsoiling and seeding is needed.

6.7.4 MISCELLANEOUS

Other methods of bank protection such as articulated concrete mattresses, gabions, concrete filled "bags" or other products may be considered on a case-by-case basis.

6.8 ARCHITECTURAL TREATMENTS

Architectural treatments are used to improve the aesthetics of bridges. Because of the extra cost, such treatments are warranted only at selected locations. Treatments include:

- brick facing;
- stone facing;
- exposed aggregate; and
- formliners.

Formliners are used on structures such as overpasses where a large part of the structure is visible. Formliners simulating various textures and treatments are available. They have been used to simulate stone and brick and can be considered on a case-by-case basis. They provide architectural treatment at lower cost than other types of treatments.

Generally, vandalism in the form of graffiti on bridge substructures is not common. Each bridge will be reviewed to determine its potential as a target for graffiti vandalism, and, if it is needed, an anti-graffiti coating will be specified.

6.9 SUBSTRUCTURE DRAINAGE

Any water that accumulates behind abutment back walls and retaining walls must be drained to prevent settlement of the embankment or failure of the wall. This is accomplished through footing drains, weep holes, and geosynthetic drains. Granular backfill behind the walls is essential to carry the water to footing drains and weep holes.

Footing drains are preferred over weep holes to drain walls that are visible to the public. A perforated drain pipe is installed behind the footing with outlets located to minimize aesthetic impacts. Weep holes may be used in walls that are not generally visible to the public, such as in back walls for stream crossings. Additional drainage for perched abutments where the granular backfill material extends below the abutment is not required. Geosynthetic drains provide drainage of the fill immediately behind the walls without the necessity of placing stone backfill. These drains are available in various thicknesses and capacities.

Chapter Seven

Culvert, Rigid Frame and Arch Design

7.1 INTRODUCTION

Culverts are typically rectangular, circular, or elliptical pipe structures which are buried and designed when flowing full to be submerged and under hydraulic pressure. They are usually used to drain tax ditches or small streams. Most large culverts are constructed with headwalls, wingwalls, cutoff walls, and scour aprons. See Figure 7-1 for a typical culvert. This chapter will discuss various types of culverts that are used by DelDOT. For related issues see Chapters 3, 5, and 6.

Types of culverts used in Delaware include pipes, boxes, rigid frames, and arches. Culverts can be constructed of concrete, steel, aluminum, or high-density polyethylene. Most small culverts in Delaware are constructed with round or elliptical pipes. Only culverts or a series of culverts with a total opening size of 20 ft^2 [1.86 m^2] or greater are classified as bridges in Delaware. Culverts with total opening sizes smaller than 20 ft^2 [1.86 m^2] are not included in the Department's bridge inventory. For openings larger than 20 ft^2 [1.86 m^2], box culverts, rigid frames, or arches are usually required. Culverts of 20 ft^2 [1.86 m^2] or greater require load ratings per Chapter Four.

The use of boxes or arches vs. larger or multiple pipes is based on a number of factors, including hydraulic efficiency, compaction around the structure, height of fill required, and total width of multiple cells. In most cases, a three-sided frame or arch is preferred to provide a natural stream bottom and low-flow channel. However, these require scour protection. A typical culvert with a natural stream bottom and scour protection is shown in Figure 7-1. For the flat topography typical of most of Delaware, taller culverts are unsuitable. In these conditions, elliptical pipes, arch pipes, or boxes may be desirable. In any case, culverts should be designed to economically meet the hydraulic and environmental demand of the location.

7.2 GENERAL POLICY

Culverts shall be designed to meet the current and future hydraulic and transportation needs of the location. All culverts shall be constructed of concrete under Interstate, US, and Delaware routes. Designers may consider using structural plate or polyethylene culverts to reinforce/reline deteriorated culverts in lieu of replacement.

This section will discuss the Department's policy related to culvert hydraulics, foundations, wingwalls, cutoff walls, scour aprons, etc.

Figure 7-1a
Box Culvert Example - Section

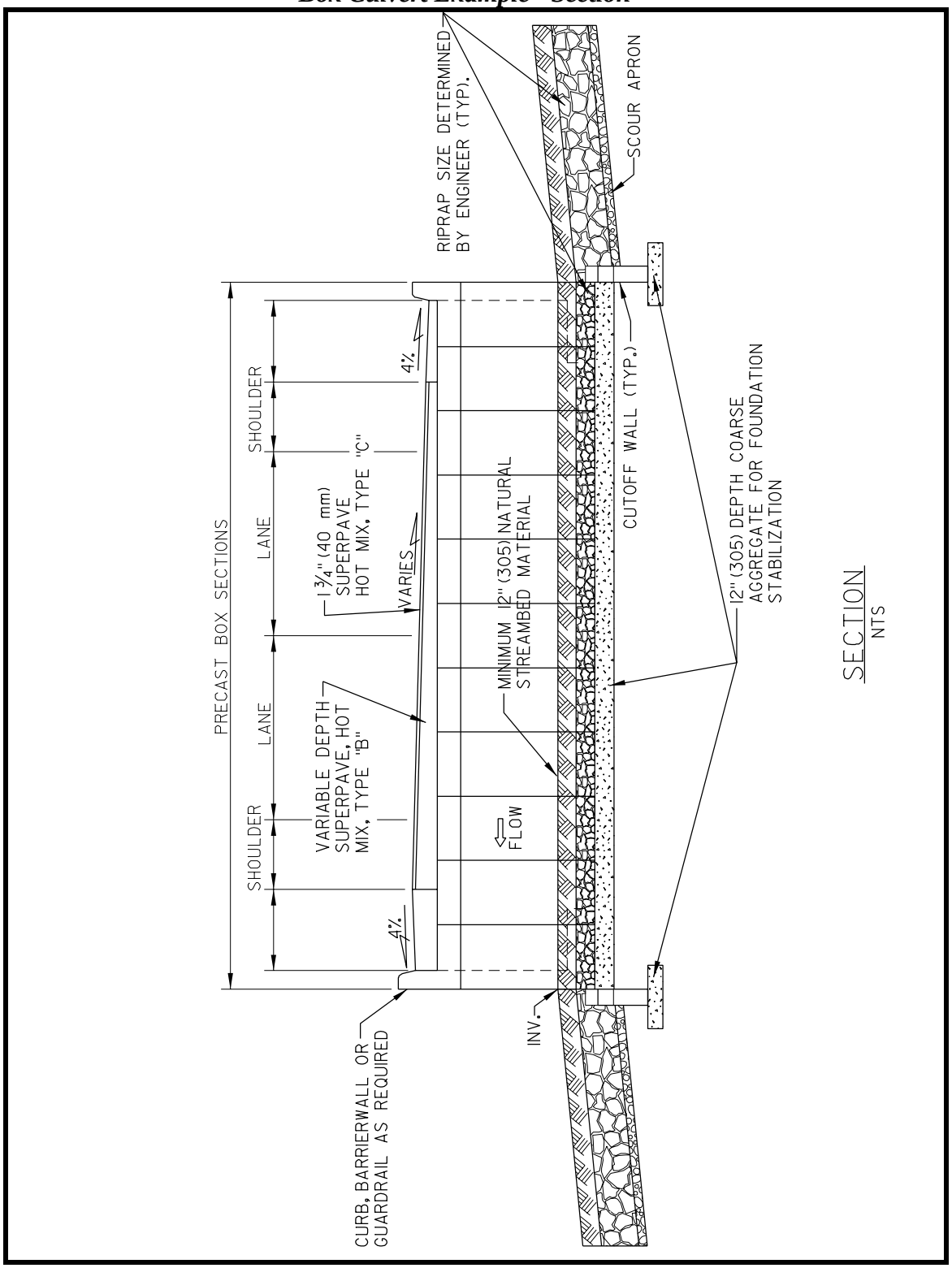

Figure 7-1b
Box Culvert Example - Elevation

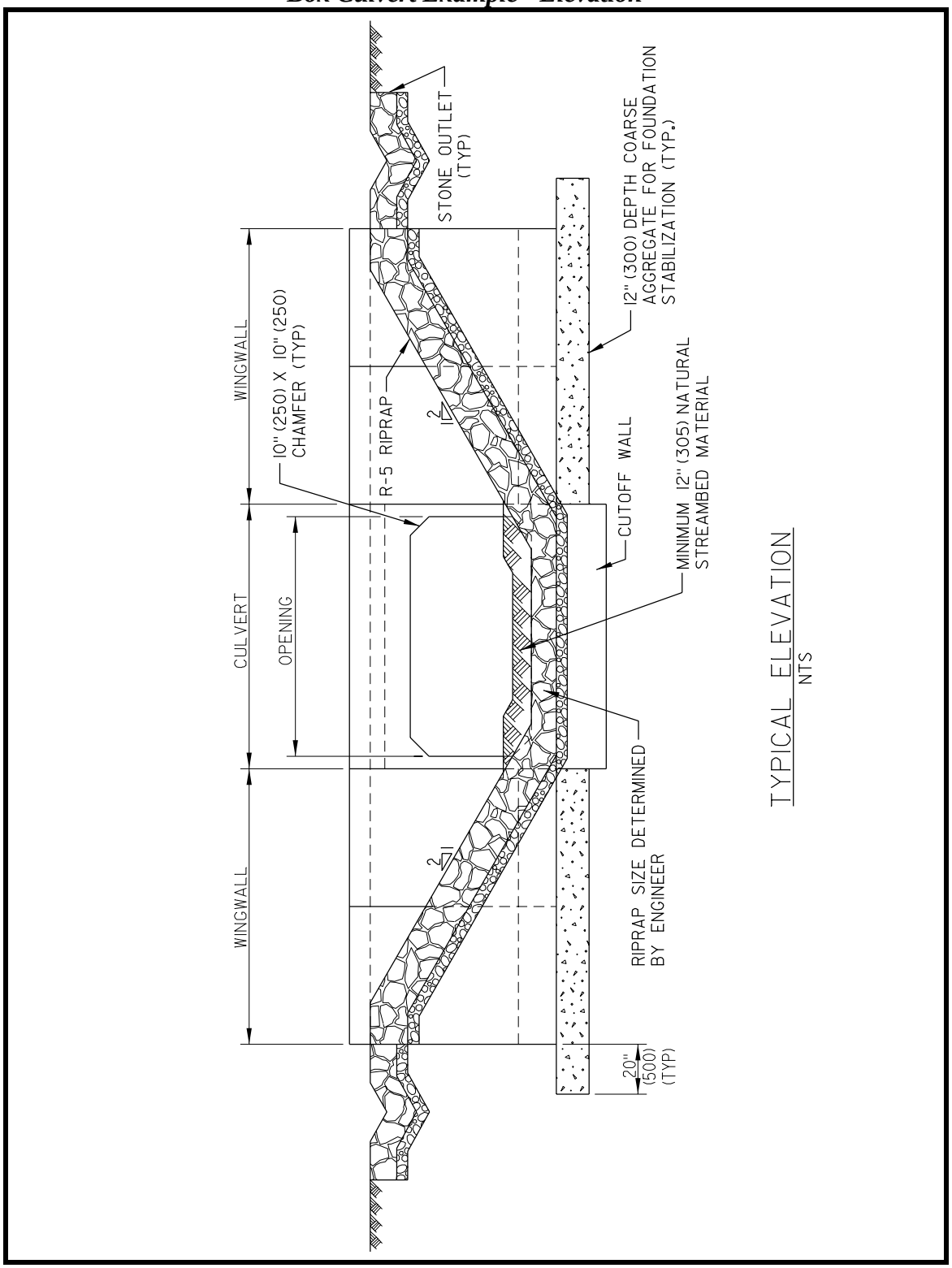

7.2.1 CULVERT HYDRAULICS

Refer to Chapter Three of this manual.

7.2.2 FOUNDATION DESIGN

Sub-surface investigations shall be conducted and analyzed to determine allowable load bearing capacity. Sub-surface investigations and design shall be carried out in accordance with Chapter 6. Coarse aggregate for foundation stabilization may be placed under culverts, typically 1 ft [300 mm] thick. The coarse aggregate shall extend a minimum 1.5 ft [450 mm] beyond all sides of the culvert.

At least 3 ft [0.9 m] shall be provided between multiple round, elliptical, and pipe arch culverts to allow for proper compaction. This spacing may be reduced if flowable fill is used. Due to the high corner pressure of pipe arches, special bedding material shall be specified, such as compacted borrow type C.

Requirements for excavation, backfill, and bedding are contained in the DelDOT *Standard Specifications*, Section 207, Excavation and Backfilling for Structures. Backfill shall meet the requirements of borrow type C or borrow type B in wet conditions.

7.2.3 HEADWALLS

Headwalls for pipes consist of an entire retaining wall structure around the inlet and outlet of the pipe, including the footing. Headwalls shall be considered on larger pipes for hydraulic efficiency, stability, and reduced need for right-of-way acquisition.

For a Reinforced Concrete Box (RCB), headwalls refer to that portion of the structure mounted on top of the box at the outlet and inlet to contain the earth on the top and around the culvert.

Where warranted, headwalls shall have concrete traffic barriers mounted on top of them.

7.2.4 WINGWALLS

Wingwalls are typically cast-in-place construction but can be precast in some cases. If precast wingwalls are specified, they must be designed to be self-supporting, not relying on the connection to the culvert for stability; however, proper connection to the culvert must be provided. A typical precast wingwall-to-culvert and wingwall-to-wingwall detail is shown in Figure 7-2. For retaining wall design criteria, see Chapter 6.

Wingwalls are called “flared” when the axis of the wingwall forms an angle with the centerline axis of the box. “Straight” wingwalls are an extension or continuation of the box walls. Wingwalls constructed in a line parallel to the roadway are commonly used to minimize right-of-way acquisition. Flared wingwalls shall be used where practical on the entrance ends of culverts for hydraulic reasons. Straight wingwalls may be specified when hydraulics and any additional costs are adequately considered.

The reference point for wingwall geometry is considered the intersection of the fill face of the wingwall and the exterior face of the box. The length of the wingwall is measured from the free end to the reference point along the fill face of the wall.

The length of walls shall be based on the roadway slope adjacent to the bridge. A 2:1 or flatter slope in front of the wingwall shall be used for the channel. The computed length of the wingwall shall be rounded up

to the next 1 ft [300 mm]. The elevation at the end of flared wingwalls shall be computed from the flow line with a 2:1 slope and shall project at least 6 in [150 mm] above finished grade.

7.2.5 CUTOFF WALLS

Cutoff or toe walls shall be installed along the entrance and exit end bottom sides of all reinforced concrete box culverts when conditions dictate as directed in HEC-14. A typical cut off wall is shown in Figure 7-3. All structural plate pipe and structural plate box structures with full inverts shall have cutoff walls. Culverts without headwalls and cutoff walls used to drain ponds shall be fitted with anti-seep collars. The bottom of the cutoff wall shall meet the bottom of the wingwall footings.

7.2.6 SCOUR APRONS

Scour aprons are constructed of R-5 or larger riprap at both the inlet and outlet end of the culvert. The riprap placement is designed in accordance with HEC-14. Riprap in the stream shall be covered with a minimum of one foot [300 mm] of natural streambed material. Riprap on side slopes shall be topsoiled, seeded and mulched.

7.2.7 GUARDRAIL ATTACHMENTS

Guardrail is typically designed to span box or frame culverts less than 18 ft [5.5 m] wide without post support. For guardrail under an adequate depth of fill, posts should be driven as per standard guardrail installations. Where guardrail is used, the culvert shall be lengthened to account for dynamic deflection of the guardrail. For details, refer to DelDOT Standard Construction Details. In cases where culverts are more than 18 ft [5.5 m] wide and standard guardrail cannot be placed, a concrete parapet shall be constructed on top of the headwall. The standard guardrail-to-barrier connection should be used with concrete parapets within the clear zone. Designers shall refer to AASHTO's *Roadside Design Guide* for more information. Where possible, culverts should extend beyond the clear zone to eliminate the need for guardrail and parapets.

7.2.8 MISCELLANEOUS

The following additional criteria shall be considered in the design of culverts:

- It is desirable to skew culverts as required to match the stream alignment.
- Selection of a culvert type should be based on life-cycle cost analysis. A sample life-cycle cost analysis is contained in *Technical Release GL-88-2, Life Cycle Cost for Drainage Structures*, US Army Corps of Engineers.
- No more than three barrels should be constructed at a single location. Wider rows of cells are undesirable because of the increased maintenance they create due to debris build-up. Single-barrel culvert designs are preferred.
- When two or more single-barrel RCB's are abutting, a monolithic headwall shall be provided at each end to join the adjacent longitudinal barrels.

7.3 CONCRETE CULVERTS

Concrete culverts used by DelDOT include precast and cast-in-place boxes, rigid frames, arches, and pipes.

7.3.1 MATERIALS

All concrete for precast concrete culvert construction shall meet f'_c equals 5,000 psi

[35 MPa]. All other concrete shall be class A concrete and meet f'_c equals 4,500 psi [30 MPa].

Reinforcing steel meeting the requirements for AASHTO M31, Grade 60 [M31M, Grade 420], shall be specified. The minimum size of reinforcement for CIP concrete is a number 5 [16] bar. Welded wire fabric is permitted for reinforcing precast concrete sections with approval of the Bridge Design Engineer. All reinforcing steel shall be protected with fusion-bonded epoxy. Epoxy coating conforming to AASHTO M284 [M284M] shall be specified.

Concrete culverts should be treated with a silene sealer before backfilling. Geotextile fabric or wrap shall be placed over joints to prevent loss of fill material.

The minimum thickness of concrete for rigid frame components is 8 in [200 mm].

The minimum cover over rebar is 2 in [50 mm] on both sides.

7.3.2 DESIGN

Structural design of RCB culverts shall be carried out in accordance with the *AASHTO Specifications*, Section 12, Buried Structures and Tunnel Liners, and shall be analyzed and designed as rigid frames. When the depth of fill exceeds 8 ft [2.4 m], live load is ignored. The minimum top and bottom slab thickness is 8 in [200 mm]. Minimum wall thickness is 8 in [200 mm].

All cells of multiple-cell RCB culverts shall be the same size. The minimum height of RCB culverts is 4 ft [1.25 m] vertical clearance to allow for inspection. Four-sided boxes can typically be used for spans up to 12 ft [3.5 m]. Span lengths from 12 ft to 25 ft [3.5 m to 7.5 m] are typically bridged using three-sided rigid frames. Designers must consider the maximum size limitations for precast units. Limitations for shipping precast concrete sections are controlled by their size and weight. The maximum allowable weight of precast sections is 20 tons [18 metric tons].

The Department will usually accept alternative designs that meet specified design criteria. Alternate construction methods must be submitted to the Department for review and approval. Alternate method submittals must contain detailed drawings and calculations sealed by a professional engineer licensed in the state of Delaware.

7.3.3 REINFORCED CONCRETE BOX CULVERTS

The standard designation for the size of an RCB culvert shall be the span followed by the rise. Span and rise are measured from the inside wall dimensions. The designation for a multiple- cell RCB culvert shall be the number of cells followed by the cell size.

7.3.3.1 Precast Box Culverts

In most cases, the Department designs culverts as precast sections. The joint exterior shall be covered with a minimum of a 9” 225 mm] wide wrap centered on the joint. The wrap material shall comply with ASTM C877 or Petrolac, Phillips Fiber Corp. All joints between precast sections shall be tongue and groove. Precast units shall be constructed with lifting devices to pick up the sections, and pulling holes to pull the sections together.

Precast box sections may pull apart during or after construction if they are not contained. To prevent this, four longitudinal ½ in [12.7 mm] diameter, 270 ksi [1862

MPa] low relaxation polypropylene-sheathed prestressing strands with corrosion inhibitor or other approved post-tensioning device, shall be placed in position through preformed holes in the corners of the precast units. These sheathed prestressing strands shall then be stressed to a total tension of 31 kips [137 kN]. These end anchorage forces must be considered in the box culvert design. The minimum ultimate strength of each sheathed prestressing strand is 41 kips [183 kN]. After post-tensioning, the exposed end of the sheathed prestressing strand shall be removed. No part of the strand or the end fittings shall extend beyond a point 2 in [50 mm] inside the hand-hold pocket. The pocket shall then be filled with non-shrink grout. See Figure 7-5.

When the top slab of a precast culvert is specified as the riding surface, an asphalt-impregnated waterproof membrane shall be placed and the culvert shall be overlaid with 2 in [50mm] of hot-mix minimum.

7.3.3.2 Cast-In-Place Box Culverts

Cast-in-place culverts are occasionally designed when site conditions are not conducive to heavy equipment or when there are utility conflicts.

Figure 7-2
Wingwall to Culvert and Wingwall to Wingwall Connection Details

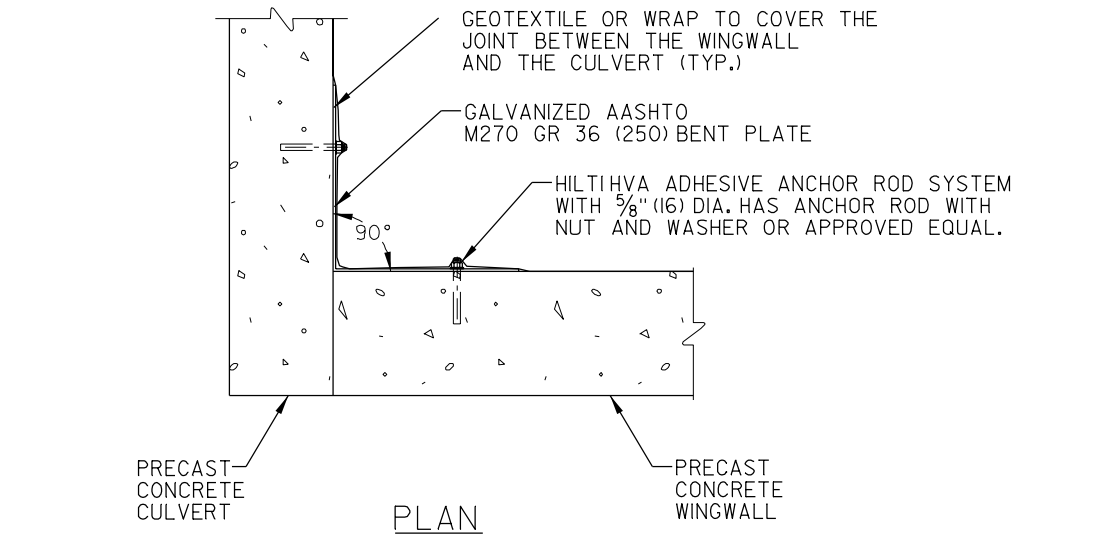

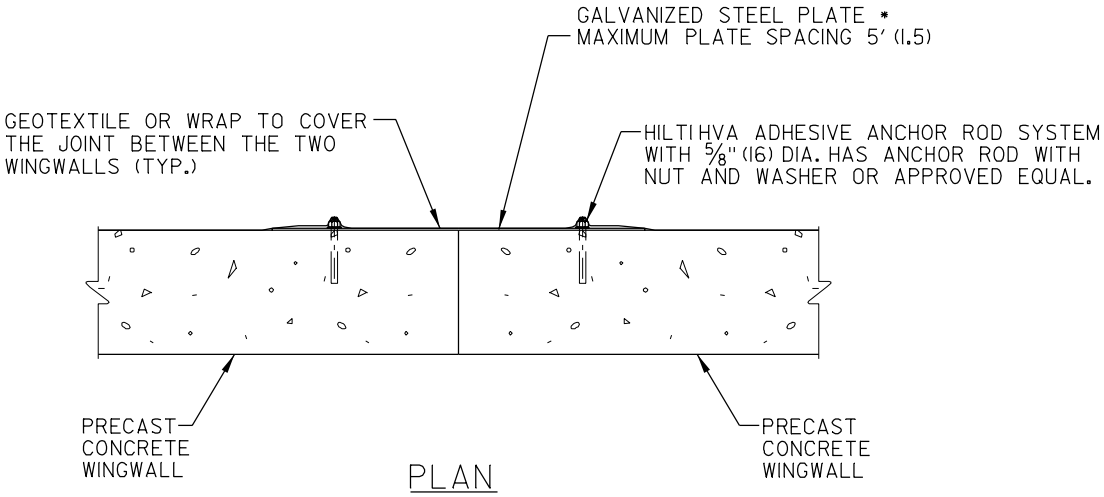

* - PLATE SHALL NOT BE DESIGNED AS A STRUCTURAL SUPPORT FOR THE WINGWALL. THE WINGWALL SHALL BE SELF-SUPPORTING. A MINIMUM OF TWO BOLTS SHALL BE INSTALLED ON EACH SIDE OF OF THE JOINT.

Figure 7-3
Typical CIP Cutoff Wall

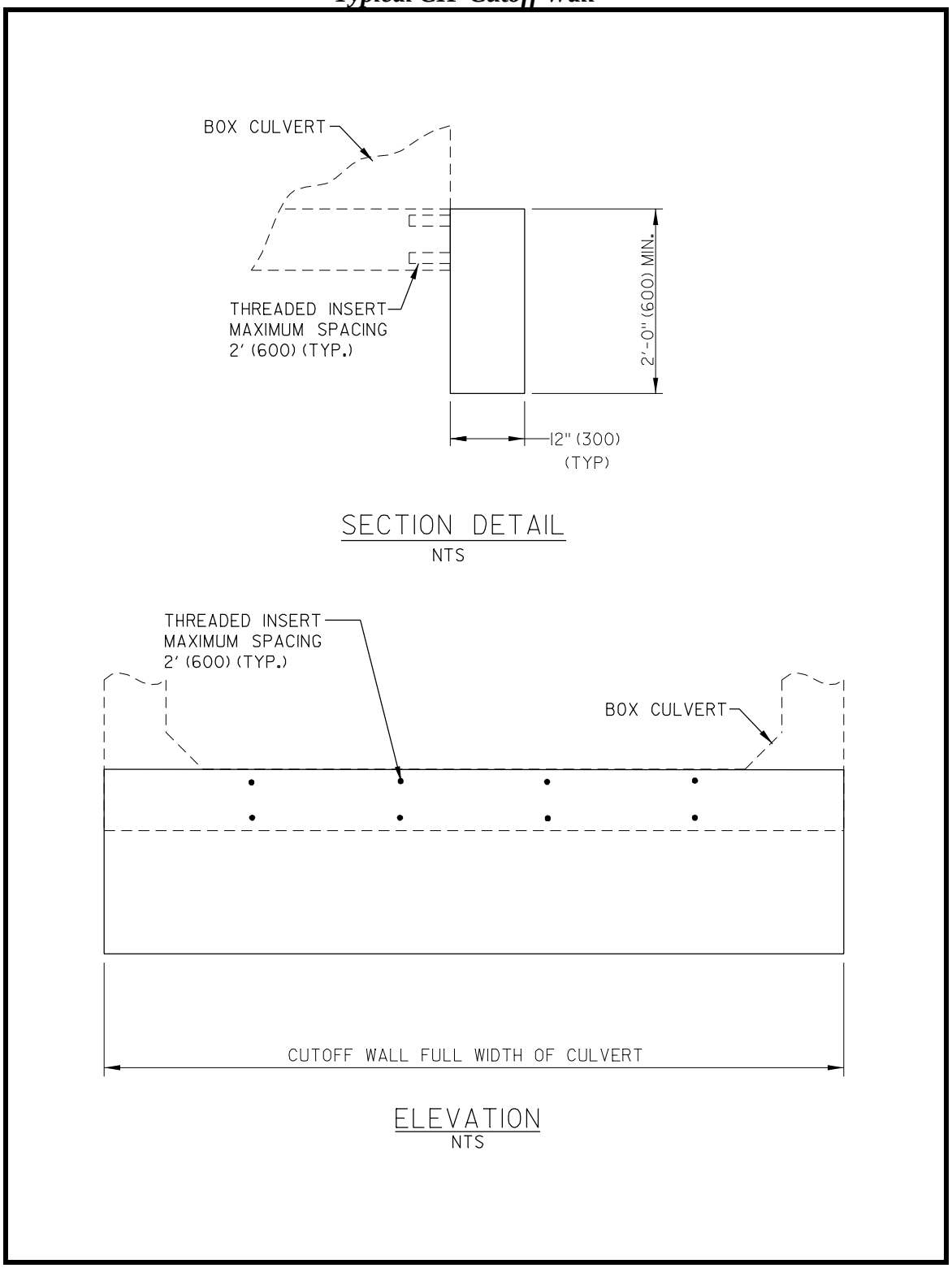

Figure 7-4
Typical Precast Cutoff Wall

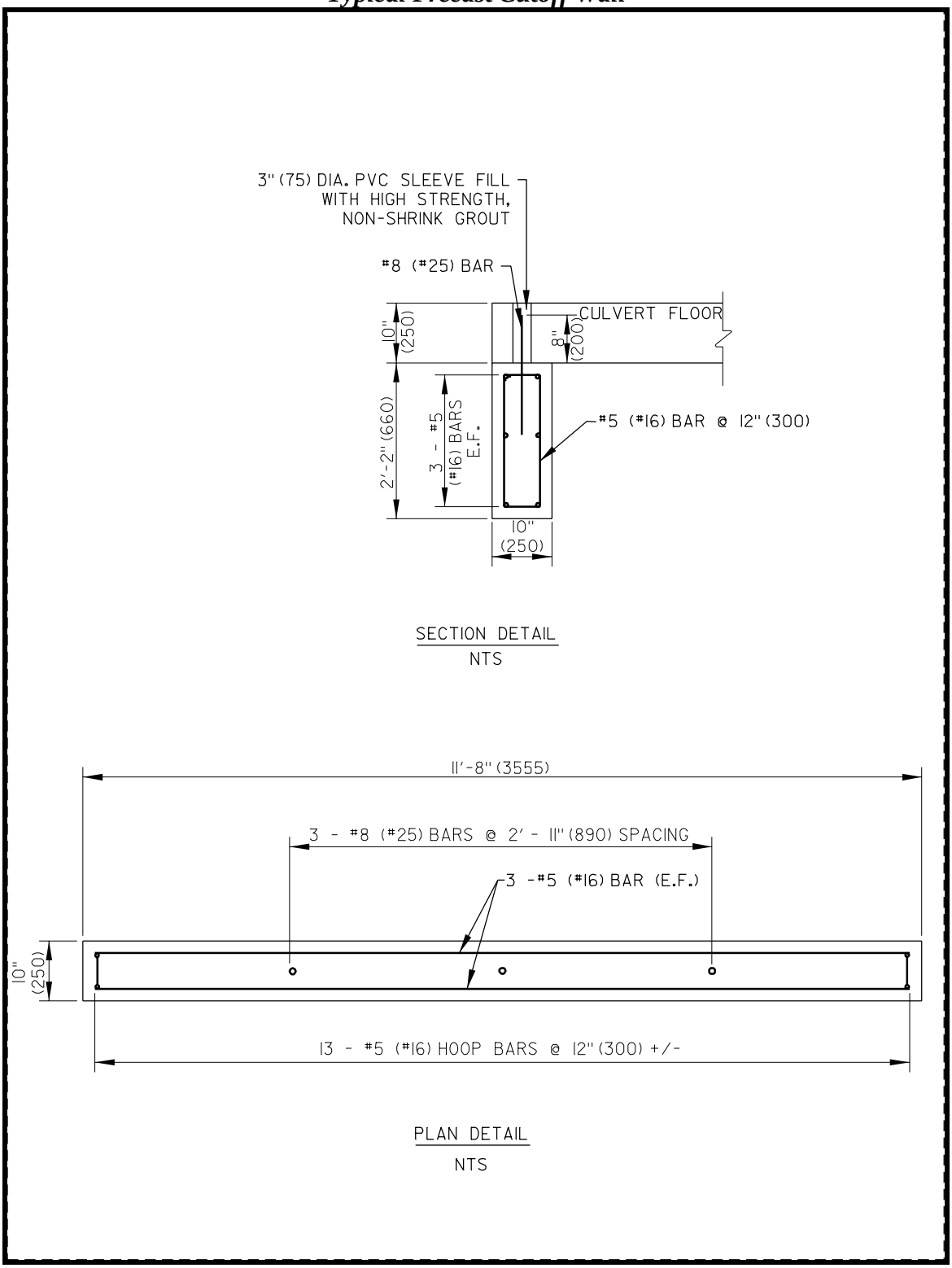

7.3.4 RIGID FRAMES

Rigid frames are three-sided concrete structures placed on precast or cast-in-place footings without a paved invert. (See Figure 7-6.) Rigid frame structures are used to span streams and seasonal waterways where a natural streambed is desirable and preferred for environmental reasons. Rigid frames are typically used for spans ranging from 13 feet [4 m] to 25 feet [8 m].

Rigid frames may be cast in place or precast. Generally, the use of precast rigid frame sections can expedite construction to reduce the inconvenience to the traveling public. There are two types of rigid frames:

- rectangular
- arch

Normally, the Department designs rectangular rigid frames. Arch rigid frames are proprietary designs and may be considered with the approval of the Bridge Design Engineer. Refer to Section 7.3.6.

Refer to Section 3 (Loads and Load Factors) and Section 5 (Concrete Structures) in the *AASHTO Specifications* for design requirements.

Typically, rigid frames support earth fills or hot-mix wearing surfaces, depending on the location and profile grade with respect to the top of the frame. An overlay is required for precast but not for cast-in-place rigid frames.

The following must be considered when the wall height for rigid frame structures is determined:

- size of opening to meet the hydraulic requirements;
- transportation costs of prefabricated elements;
- transportability of the elements; and
- clearance for inspection, especially for flowing streams.

A haunch is required where the wall and slab join. The minimum size is 6 in [150 mm] by 6 in [150 mm]. Larger haunches, up to a maximum of 12 in [300 mm] by 12 in [300 mm], are permitted but must be reinforced.

Depending on site conditions, rigid frames may be placed on:

- cast-in-place spread footing,
- pile-supported, cast-in-place footing, or
- precast spread footing.

Holes are formed in precast frames to allow placement of tie rods or post-tensioning strands to hold adjacent rigid frame sections together. Tie rods shall be tensioned. Shear keys transfer shear between adjacent sections. Shear keys are sealed by filling with high-strength, non-shrink grout. (See Figure 7-7.)

Figure 7-5a
Post Tensioning Components Details

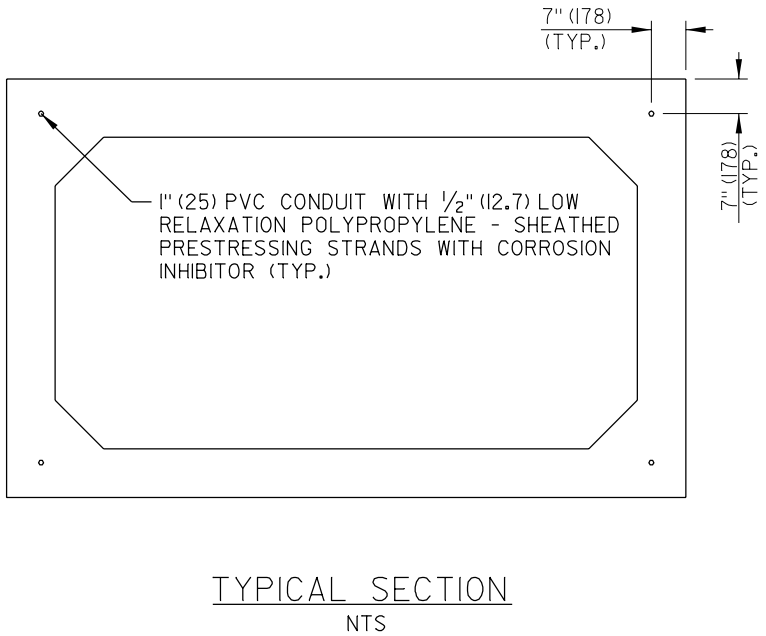

Figure 7-5b
Post Tensioning Components Details

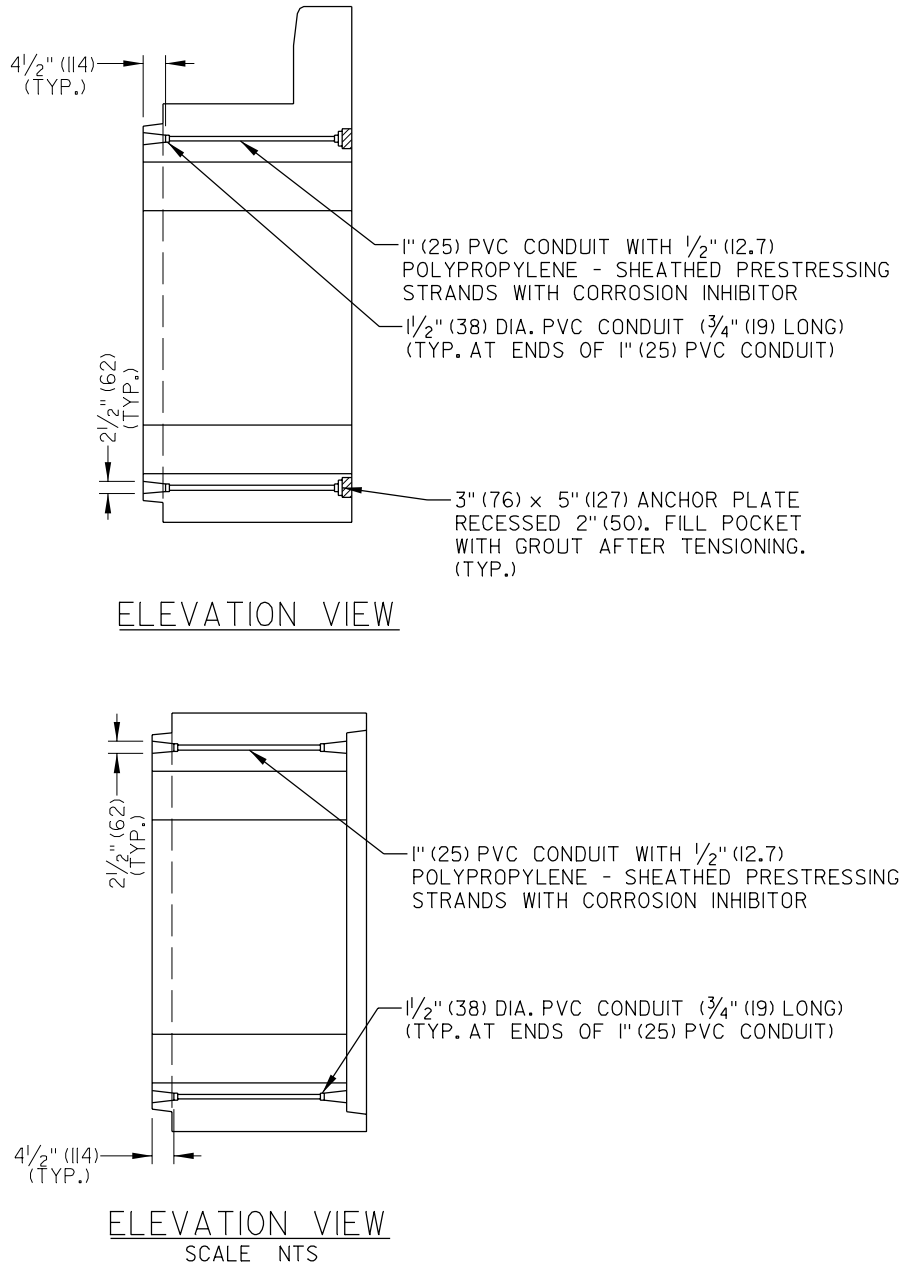

Figure 7-6
Rigid Frame Detail Example

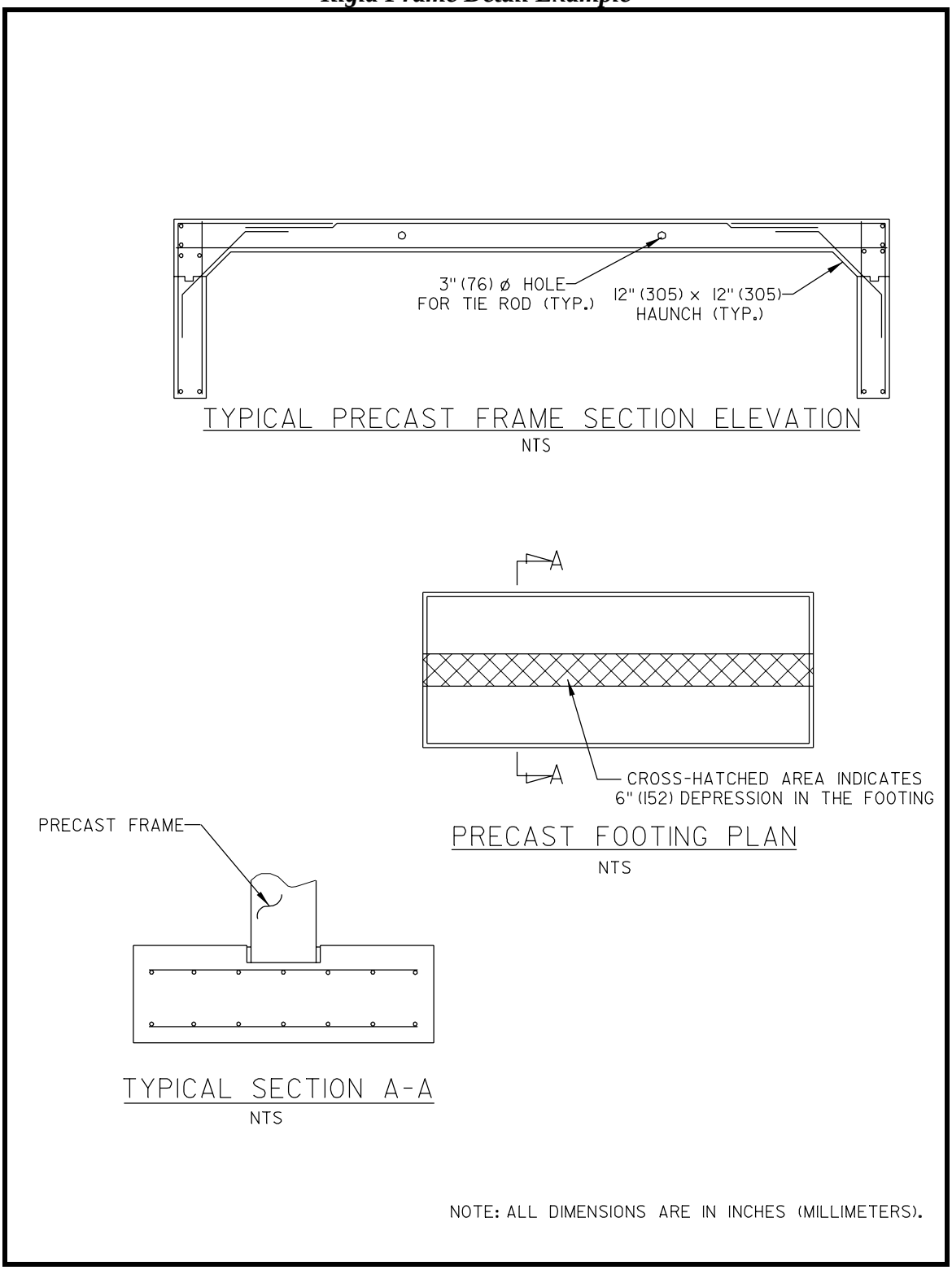

Figure 7-7
Rigid Frame Shear Key Detail Example

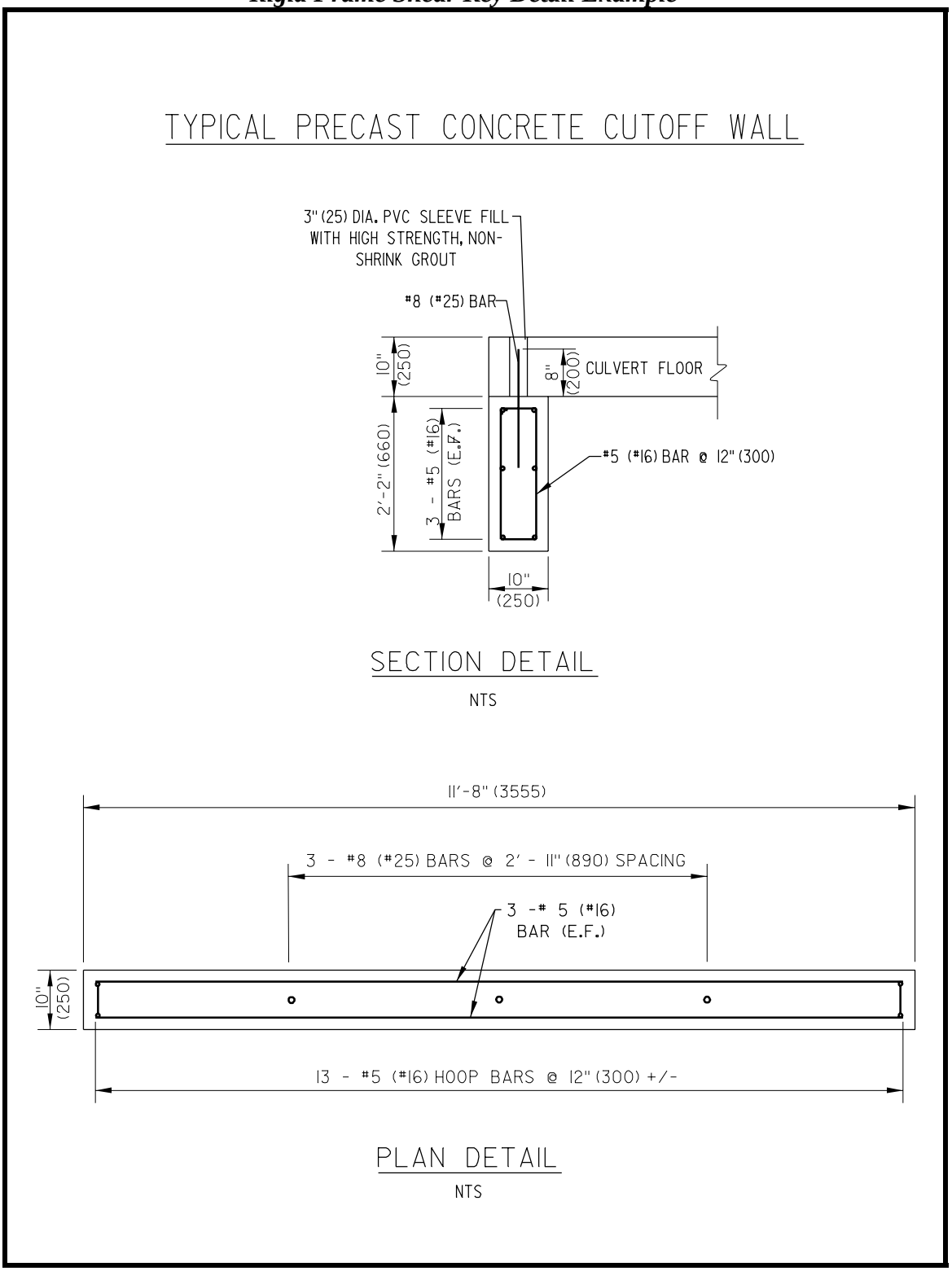

7.3.5 CONCRETE PIPE CULVERTS

Round and elliptical pipes are widely used for roadway drainage. They are standardized structures, and no structural drawings are needed in the contract documents. Design, material, manufacture, and testing requirements shall be in accordance with the Department's *Standard Specifications* and with the *AASHTO Standard Specifications for Transportation Materials and Methods of Sampling and Testing*. This reference also provides the standard sizes of round and elliptical concrete culverts that are produced. Elliptical pipes used by the Department are normally horizontally elliptical.

7.3.5.1 Material

Materials for round and elliptical concrete pipe shall meet the requirements of *Standard Specifications*, Section 612 and *AASHTO Standard Specifications for Transportation Materials and Methods of Sampling and Testing*, M170 (Round RCP) and M207 (Elliptical RCP).

7.3.5.2 Design

Concrete pipes are classified according to their construction and strength as class I, II, III, IV, or V. The standard pipe class used by DelDOT is class III. Class IV and V pipe shall be used when higher strength is needed. Selection of the class of pipe required is based on the diameter and height of fill above the top of the pipe.

Only round and elliptical concrete pipe culverts designed in accordance with *AASHTO Specifications*, Section 12, Buried Structures and Tunnel Liners, shall be used. Earth loads and live loads shall be in accordance with *AASHTO Specifications*, Section 3.

7.3.6 CONCRETE ARCHES

Concrete arches are typically used to accommodate long span and low rise site requirements. Typical concrete arch spans range from 30 to 50 feet [9 to 15 m]. Concrete arches are used to span streams and seasonal waterways where a natural streambed is desirable and preferred for environmental or aesthetic reasons.

All new concrete arches are precast. Extensions of existing arches may be cast in place.

7.3.6.1 MATERIALS

All concrete for the precast portion of concrete arches will meet f'_c equals 5,000 psi [35 MPa]. All other concrete will meet f'_c equals 4,500 psi [30 MPa].

Reinforcing steel meeting the requirements for AASHTO M31, Grade 60 [M31M, Grade 420], shall be specified. The minimum size of reinforcing bar for CIP concrete is #5 [16] bar. Welded wire fabric is permitted for reinforcing concrete arches with approval of the Bridge Design Engineer.

All reinforcing steel shall be protected with fusion-bonded epoxy. Epoxy coating conforming with AASHTO M284 [M284M] shall be specified.

7.3.6.2 DESIGN

Refer to Section 5, Concrete Structures, and Section 12, Buried Structures and Tunnel Liners, in the *AASHTO Specifications*. The design procedures in Section 5 apply for design of concrete arches where soil interaction is not

considered. Soil interaction is considered only where the arch is poured monolithically with the footing. In this case, use the procedures in Section 12.

Two mats of steel are used in concrete arches. Concrete arches should be damp-proofed before backfilling.

7.3.6.3 THICKNESS

The minimum thickness for concrete arches is 8 in [200 mm].

7.3.6.4 CONCRETE COVER

The minimum cover over reinforcing steel is 2 in [50 mm] on the top and bottom of the arch.

7.3.7 PRECAST PROPRIETARY STRUCTURES

Precast proprietary structures may be proposed by contractors as alternatives to Department-prepared designs of rigid frame or concrete arches. Proprietary structures may be considered on a case-by-case basis and must meet the following requirements for approval:

- designed using the same AASHTO methods used by the Department;
- provide structural load rating using accepted methods;
- meet the specified minimum concrete strengths;
- furnish documentation of the structural strength of the structure including actual test results;
- provide documentation of long-term service to show durability; and
- provide connection between units.

7.4 METAL CULVERTS

Metal culverts used by the Department are corrugated metal pipe, structural plate, and pipe arch.

Due to lower life cycle costs, only aluminum or aluminum-coated (aluminized) steel shall be allowed on the Department's metal culvert bridge projects. All materials shall meet the requirements of the Department's *Standard Specifications* Section 614, and *AASHTO Standard Specifications for Transportation Materials and Methods of Sampling and Testing*, Sections M-36 and M-219. All metal pipe sections shall be tied together with metal bands that meet the requirements of AASHTO M36.

Structural design of corrugated metal pipes shall be in accordance with the *AASHTO Specifications*, Section 12, Buried Structures and Tunnel Liners. Earth loads and live loads shall be in accordance with the *AASHTO Specifications*, Section 3.6.1.2.6, Distribution of Wheel Loads Through Earth Fills.

7.4.1 CORRUGATED METAL PIPES

Corrugated metal pipe for storm drainage applications is not approved under U.S., interstate and state routes but may be used outside pavement limits. All pipe, pipe placement, and backfill shall be in accordance with DelDOT *Standard Specifications* Section 614. Manning's n value shall be per the manufacturer's recommendations. Gauge of the pipe shall be per the manufacturer's recommendations for the depth of fill and loading.

7.4.2 STRUCTURAL PLATE PIPE STRUCTURES

Designers may select from a variety of manufacturers available. Shapes include elliptical arches of various radii, pipe, pipe-arch, and ellipse. Size and shape shall be based on hydraulic and site requirements. Geometry, materials, Manning's n value, and plate gauge shall be based on availability and manufacturer's design charts. Designers shall refer to manufacturer's design charts when preparing the plans.

The bottom is typically depressed to allow for natural filling. Structural plate pipe culverts shall be designed with headwalls, and those constructed with bottom plates shall have cutoff walls. Backfill shall meet manufacturer's recommendations or DelDOT Standard Specifications. Foundation design shall follow the requirements of Chapter Six of this manual, and measures shall be taken to protect the footing from scour.

The contractor shall submit shop drawings and calculations sealed by a professional engineer for Department approval. All erection and backfill shall be in accordance with the manufacturer's shop drawings.

7.4.3 STRUCTURAL PLATE BOX CULVERTS

Designers shall select the size, geometry, material, and plate gauge of structural plate box culverts. Size and shape shall be based on hydraulic and site requirements. Geometry, materials, Manning's n value and plate gauge shall be based on availability and manufacturer's design charts. Designers shall refer to manufacturer's design charts when preparing the plans. Structural plate culverts shall be designed with headwalls, and those constructed with bottom plates shall have cutoff walls. Backfill shall meet the manufacturer's recommendations or DelDOT *Standard Specifications* requirements. Foundation design shall follow the requirements of Chapter Six, and measures shall be taken to protect the footing from scour. See Section 7.2.6 for bottom requirements.

The contractor shall submit shop drawings and calculations sealed by a professional engineer for Department approval.

7.5 HIGH DENSITY POLYETHYLENE PLASTIC PIPES

High density polyethylene plastic (HDPE) pipe is acceptable for use on Department projects. Please refer to Department guidelines for installation requirements.

7.5.1 MATERIAL

Material properties and specifications shall be in accordance with *AASHTO Specifications*, Section 12.

7.5.2 DESIGN

Structural design of HDPE pipe shall be in accordance with *AASHTO Specifications*, Section 12. Earth loads and live loads shall be in accordance with *AASHTO Specifications*, Section 3.

Chapter Eight

Timber Structures Design

8.1 INTRODUCTION

As of 2005, almost three percent of Delaware's bridges were timber.

DelDOT's construction of timber bridges has decreased in proportion to its use of other materials over the last 50 years. This is due to an increasing use of steel and concrete to accommodate longer spans, increased traffic and larger truck loads. Today, most new timber bridges constructed by DelDOT are single spans over tax ditches and creeks on low-volume roads.

Other uses of timber by DelDOT include piles, barriers, railings, boardwalks, decks, fender systems, privacy fences, landscaping, railroad ties, and retaining walls.

This chapter will discuss general aspects of timber bridges, physical and mechanical properties of timber, preservatives, hardware, design criteria, and the design of various components of bridges using wood. These topics will be discussed in enough detail to give designers the insight needed to design timber bridges that are constructable, functional, durable, and maintainable. Emphasis will be placed on the types of timber bridges in use on the state's highway system. Where appropriate, the designer is referred to other references for details not presented here.

8.1.1 ADVANTAGES AND DISADVANTAGES OF TIMBER BRIDGES

The main advantages of timber bridges relative to other bridge materials are:

- Ease of construction;
- Ease of maintenance;
- Pleasing appearance;
- Renewable resource;
- Consstruction is not weather-dependent;
- Lightweight.

The main disadvantages of timber bridges are:

- Susceptibility to vandalism.
- Rapid decay in the absence of proper treatment.
- The need to account for irregularities in the material in design and construction.
- Frequent maintenance requirements.

8.1.2 TIMBER AS A BRIDGE MATERIAL

Timber can be used to construct many different types of bridge systems. In Delaware, some of them are:

- Beam

- Deck
- Truss

Most timber bridges currently being built in the state are laminated deck type systems. However, many beam type systems constructed prior to the 1960's are still in DelDOT's bridge inventory.

Many different qualities and species of wood are available for construction. Because of the large variation in timber qualities, the bridge designer must carefully specify wood materials. This is to insure that the timber specified is available, durable, and can safely carry the design loads and satisfy serviceability limit states.

Construction of timber beam and deck bridge systems in Delaware is carried out using various types of lumber. Variations in lumber used in bridge construction include:

- Species of the tree;
- Physical properties of the lumber;
- Mechanical properties of the lumber;
- Sawn or laminated lumber;
- Preservative treatments.

Additional design considerations are:

- Superstructure type;
- Types of fasteners;
- Railings;
- Wearing surfaces;
- Fire resistance and/or protection;
- Substructure type.

8.1.2.1 TIMBER BEAM SUPERSTRUCTURE

Beam type systems are the simplest type of timber bridge. Most consist of a series of longitudinal beams supported by piers and abutments. Typically spans can range from 10 to 30 ft [3 to 9 m] depending on the beam type. Most of the bridges of this type on Delaware's highway system were built prior to the 1960's. Timber beam systems include:

- Sawn Lumber Beams
- Glue Laminated Beams

Most timber beam type bridges in Delaware are sawn lumber beams, and most range in span from 10 to 20 ft [3 to 6 m]. The beams are typically less than 3 feet [1 m] apart, and are commonly 4 to 8 in [100 to 200 mm] wide and 12 to 18 in [300 to 450 mm] deep. Decks on beam superstructures are typically constructed of 2 to 4 in [50 to 100 mm] thick planks placed transverse to the beams. The planks are typically not overlaid with a wearing surface, because they deflect under load, causing cracking of the wearing surface.

8.1.2.2 LONGITUDINAL DECK SUPERSTRUCTURES

Longitudinal deck superstructures are the primary types of timber bridges currently being constructed in Delaware. Longitudinal deck superstructures are constructed by glue laminating timber planks together to form panels, and then, if possible, stress laminating the panels together to form a rigid deck unit. The deck is typically overlaid with hot-mix. See Section 8.7 for more design details.

Longitudinal deck superstructures are typically between 8 and 16 in [200 and 400 mm] deep. They can be used economically and practically for clear spans up to approximately 30 ft [9 m]. The low profile of these bridges makes them desirable when vertical clearance below the bridge is limited.

8.2 PHYSICAL PROPERTIES OF STRUCTURAL TIMBER

Physical properties of wood refer to its natural qualities. Numerous factors have an effect on the physical properties of wood. Designers must be aware of these factors and specify allowable mechanical properties for use in design. Mechanical properties of lumber are discussed in Section 8.3. Factors having an effect on the physical properties of wood are:

- Species
- Direction of grain
- Moisture content
- Density
- Knots
- Durability

8.2.1 LUMBER SPECIES

Lumber is manufactured from a great variety of timber species. Physical properties of each species vary. Some species of timber are strong and durable, while others are not. Species with similar mechanical properties are classified into groups. Typically, several species suitable for bridge construction are available in a given location. In Delaware, the preferred species for use in bridge construction are Douglas fir and southern yellow pine. For the replacement of historic covered bridges, the exotic fire-resistant wood bongossi/azobe (Lophira alata) may be used with the approval of the Bridge Design Engineer.

8.2.2 DIRECTION OF GRAIN

Wood grows as fibers that run in the direction of the tree trunk. Parallel to the wood fibers is “with the grain”. Perpendicular to the direction of the fibers is “against the grain”. Wood has different structural properties in each of these directions, which must be accounted for in design.

8.2.3 MOISTURE CONTENT

Moisture content of wood is the weight of water it contains divided by its dry weight. Moisture content is typically expressed as a percentage. Moisture content of timber varies by species and structural application. Wood is a hygroscopic material, which means that it absorbs moisture in humid environments and loses moisture in dry environments. As the moisture content of wood changes, so does its strength. Wood with lower moisture content has higher strength. The factors used to make strength adjustments based on changes in the physical condition of wood are given in Section 8.3.4.2. Moisture content of wood used in timber bridges is a function of use above or below the water line, temperature, and humidity.

As the moisture content of wood changes, wood shrinks and swells. With the grain, average shrinkage values for green to oven dry conditions range between 0.1 and 0.2 percent; this is generally of no concern to the designer. Against the grain, shrinkage is much more pronounced. The effect of uneven drying in two different directions perpendicular to the grain can cause wood to warp. This commonly occurs in thin planks. Typically, bridge designers do not have to make shrinkage calculations; however, they should understand how shrinkage occurs and guard against its detrimental effects.

8.2.4 DENSITY

Density of wood varies with species and moisture content. Density for most species varies between 20 and 50 pcf [320 and 800 kg/m^3]. For most bridge applications, density is taken as 50 pcf [800 kg/m^3]. The density of bongossi is 66 pcf to 75 pcf [1060 to 1205 kg/m^3]. Density of wood and strength are closely related. Generally, as density increases, strength increases proportionally. Density is also important in buoyancy calculations.

8.2.5 KNOTS

Knots are formed by a branch that has been surrounded by growth of the trunk. Knots reduce the strength of wood because they interrupt the continuity and direction of wood fibers.

8.2.6 DURABILITY

The natural durability of wood is defined as its resistance to decay and insect attack. Natural durability of wood varies with species. In general, only the heartwood of a tree is considered naturally durable. Heartwood is the interior of the tree trunk which is composed of inactive wood cells. Because of variations in durability, it is unreliable for the bridge designer to depend on natural wood durability in structural applications. Therefore, the wood used in structural applications is treated to resist decay and attack from insects. Preservative treatments for wood will be further discussed in Section 8.4.

8.3 MECHANICAL PROPERTIES

Mechanical properties describe the characteristics of a material in response to externally applied forces. Designers are mainly concerned with elastic and strength properties.

Elastic properties relate a material's resistance to deformation under an applied load and ability of the material to regain its original dimensions when the load is removed. There are three elastic properties of wood: modulus of elasticity, shear modulus, and Poisson's ratio. Each of these elastic properties has different values depending on species, grade, and orientation of the applied load to the direction of the grain. The only elastic property of wood that is typically required in bridge design is modulus of elasticity in the longitudinal direction. This value relates the stress occurring in that direction to the strain occurring along the same axis.

Strength properties describe the ultimate resistance of a material to applied loads. They include compression, tension, shear, bending, and torsion. As with elastic properties, strength properties of wood vary in different directions along the grain and with species and grade.

Mechanical properties of wood vary greatly. Even timber members cut from the same log can have widely varying mechanical properties. The mechanical properties of any given member are a direct result of its inherent physical properties. This leads to a fairly elaborate system for both lumber grading at the mill and determination of mechanical properties to be used in design. Wood strength and elastic design values are found in the *AASHTO Specifications*, Section 8.4.

8.3.1 SAWN LUMBER GRADING

Mechanical properties of sawn lumber are a function of species, physical condition of the member, size, and structural application.

When lumber is cut from a log, the properties of the individual pieces vary considerably in strength and stiffness. To obtain reliable engineering properties, lumber is visually graded at the mill by trained inspectors or by mechanical methods, which actually stress each piece to determine its strength. The grade of visually graded lumber is directly related to the number, character, and location of features that lower the strength, stiffness, or durability of the piece. Common factors which affect lumber grade are knots and slope of the grain.

8.3.1.1 Grading Rules

Grading of lumber varies by size classification. Grades for dimensional lumber are standardized by the National Grading Rule (NGR). For larger sizes, grading is not standardized but is controlled by various grading rule agencies. In turn, these grading agencies provide tabulated values for that grade that can be used for structural calculations. Design values for lumber used on DelDOT projects shall be obtained from the *AASHTO Specifications*, Section 8, to the extent possible. The process of establishing design properties for visually graded lumber is contained in *ASTM D245, Standard Methods for Establishing Structural Grades and Related Allowable Properties for Visually Graded Lumber*.

The American Lumber Standards Committee performs quality control of lumber grading practices.

8.3.1.2 Specifying Allowable Timber

DelDOT practice is to specify two criteria that must be met for lumber used on bridge projects: minimum mechanical properties and acceptable species and grade. The designer uses these mechanical properties in design calculations. DelDOT typically uses Grade I southern yellow pine or Douglas fir.

To ensure that the lumber supplied meets specifications, the contractor is required to submit shop drawings of all structural elements for review and acceptance. The shop drawings must indicate the saw mill supplier, species, grade and grading rules used. During construction, the lumber supplied must be marked in accordance with industry standards to identify properties for that species and grade. Typical quality marks for visually and mechanically graded sawn lumber are shown in Figure 8-1, and include the following:

- Grade;
- Species of wood;
- Grading rules agency used for grading;
- Inspection agency;
- Moisture content at the time of surfacing;
- Mill number or name.

Lumber is also inspected for conformity with plans and specifications by DelDOT Materials and Research personnel or their representatives. Each piece of lumber is inspected and, if acceptable, is hit with a DelDOT hammer mark. This inspection normally is performed at the preservative treatment facility after the lumber has been treated. Lumber may be rejected due to failure to meet specification tolerances for warpage, splits, checks, dimensional variations, inferior grade, preservative retention and others. At the job site, construction inspection personnel must verify that all lumber delivered has been inspected and accepted.

Figure 8-1
Typical Lumber Grade Mark

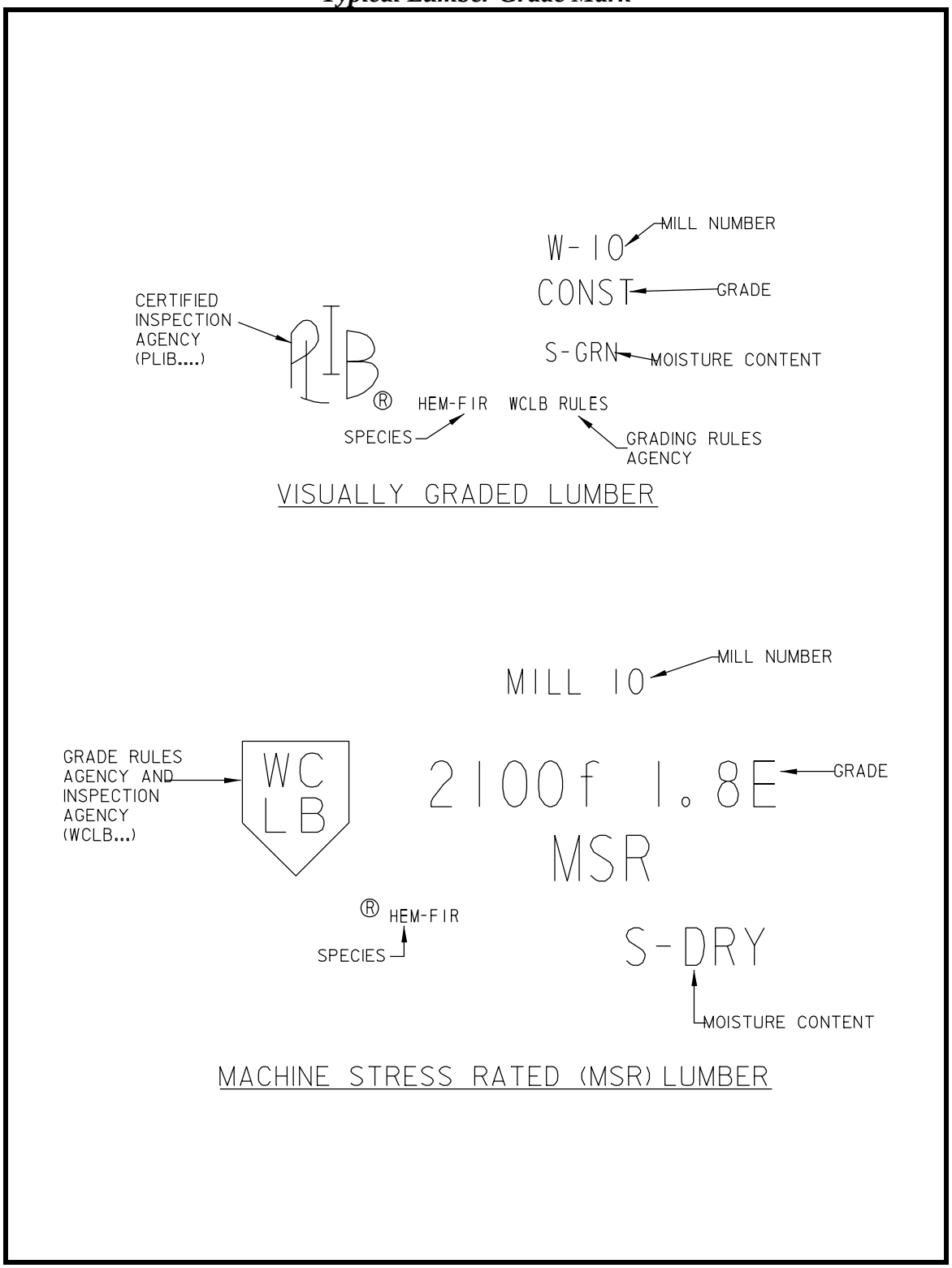

8.3.2 LUMBER SIZES

Lumber sizes are typically recorded in nominal dimensions, which are not the actual size of the piece. Nominal dimensions of lumber are always greater than the actual net dry dimensions of the piece. The actual net dry dimension of the piece will vary depending on the type of surfacing: dressed, rough-sawn, or fully sawn.

Dressed lumber is used in most bridge design applications. Dressed lumber is run through a plane after sawing to give it a smooth finish. This is referred to as surfaced four sides (S4S). The S4S process reduces the size of the lumber. Unless otherwise specified, all lumber used in DelDOT bridge construction shall be cut square and surfaced on four sides. Net dry dimensions for dressed lumber are given in the *AASHTO Specifications*, Section 8. Designers must use the actual net dry dimension of the piece in all calculations and design. Measurement for payment of timber is based on nominal width, thickness and the actual length of the pieces in the finished structure.

Exceptions where dressed lumber is not used is with timber piles, pile caps, decking, and timber roadway guardrail. All glulam members are specified and constructed actual sizes. Glulam members are manufactured from 1 ½" [38 mm] lumber laminations (western species) on 1 3/8" [35 mm] laminations (southern pine). Standard finish dimensions for glulam members are given in the *AASHTO Specifications*, Section 8. Timber pile sizes are specified by a minimum butt diameter. The size and surface treatment of timber piles is specified in the DelDOT Standard Specifications. The minimum tip diameter of timber piles varies between 7 and 8 in [175 to 200 mm] based on the length of the pile.

Lumber is typically produced in 2-ft [610 mm] lengthwise increments. In width and thickness, common sizes vary from 2 to 16 in [50 to 400 mm]. Available sizes should be confirmed prior to specifying them.

8.3.3 MECHANICAL PROPERTIES OF GLUE LAMINATED TIMBER (GLULAM)

Bonding planks of wood together creates glue-laminated timber. The planks are bonded together on their wide face. Bonding is carried out using adhesives. This process has the following advantages:

- Beams can be produced in virtually any size and a variety of shapes.
- Increased strength is obtained by dispersing strength-reducing characteristics throughout the member.
- Better dimensional stability is achieved because the beams are manufactured from dry lumber.

8.3.3.1 Product Standards

Standards for glulam lumber are provided by the *American National Standard for Wood Products - Structural Glue Laminated Timber, ANSI/American Institute of Timber Construction (AITC) A190.1*. This standard contains requirements for the production, inspection, testing and certification of structural glulam. Glulam can be manufactured from any lumber species provided it meets necessary grading and stiffness criteria. Laminations are selected from stress-graded sawn lumber. Normal moisture content of the lumber at the time of gluing should not exceed 16%, and the maximum lamination thickness should not

exceed 2 in [50 mm]. Lumber used on DelDOT projects is kiln-dried Douglas fir or southern pine, and engineering properties shall be as noted on the plans.

8.3.3.2 Adhesives

Adhesives used in the glulam process must be capable of developing shear strength in excess of the wood capacity. Adhesives must be "wet-use" adhesives conforming to the Voluntary Product Standard PS-56-73 of the U.S. Department of Commerce, National Bureau of Standards. All milling and gluing shall be performed prior to treating.

8.3.3.3 Joints

When the size of the glulam member exceeds the size of available lumber, joints must be used. End Joints are used to splice members lengthwise, and edge joints are used to splice widthwise. End joints shall be finger joints and shall be glued. Edge joints may be glued or unglued. If edge joints are not glued, then reduced shear design values must be used. The use of edge joints is discouraged by manufacturers as it is a labor intensive process. The exterior edge of all glulam members should be edge glued to prevent the ingress of water into the member.

For transportation and erection purposes, deck panels should not be more than about 60 ft [20 m] long. When splices in the length of deck panels are required, they should be made over a support.

8.3.3.4 Quality Control

Glulam manufacturers must maintain a strict quality control program run according to ANSI/American Institute of Timber Construction (AITC) A190.1 specifications. This program includes inspection and evaluation by a third party of manufacturing procedures, material testing, and quality control records. DelDOT's *Standard Specifications* require that glulam manufacturers be licensed by AITC.

Members manufactured for DelDOT bridges must bear a custom product quality mark. A typical glulam quality mark is shown in Figure 8-2. In addition, the manufacturer must provide a certificate of material conformance at the time of delivery.

8.3.4 TABULATED DESIGN VALUES

As previously discussed, wood strength varies with species, growth characteristics, loading, and condition of use. As a result, numerous design strength values are possible. In fact, so many combinations are possible, that it is not practical to publish them all. Therefore, timber design values are normally published by species, grade, and size classification for a set of standard conditions. Tabulated values are adjusted by modification factors to arrive at the allowable values used in each design.

Figure 8-2
Custom Glulam Product Quality Mark

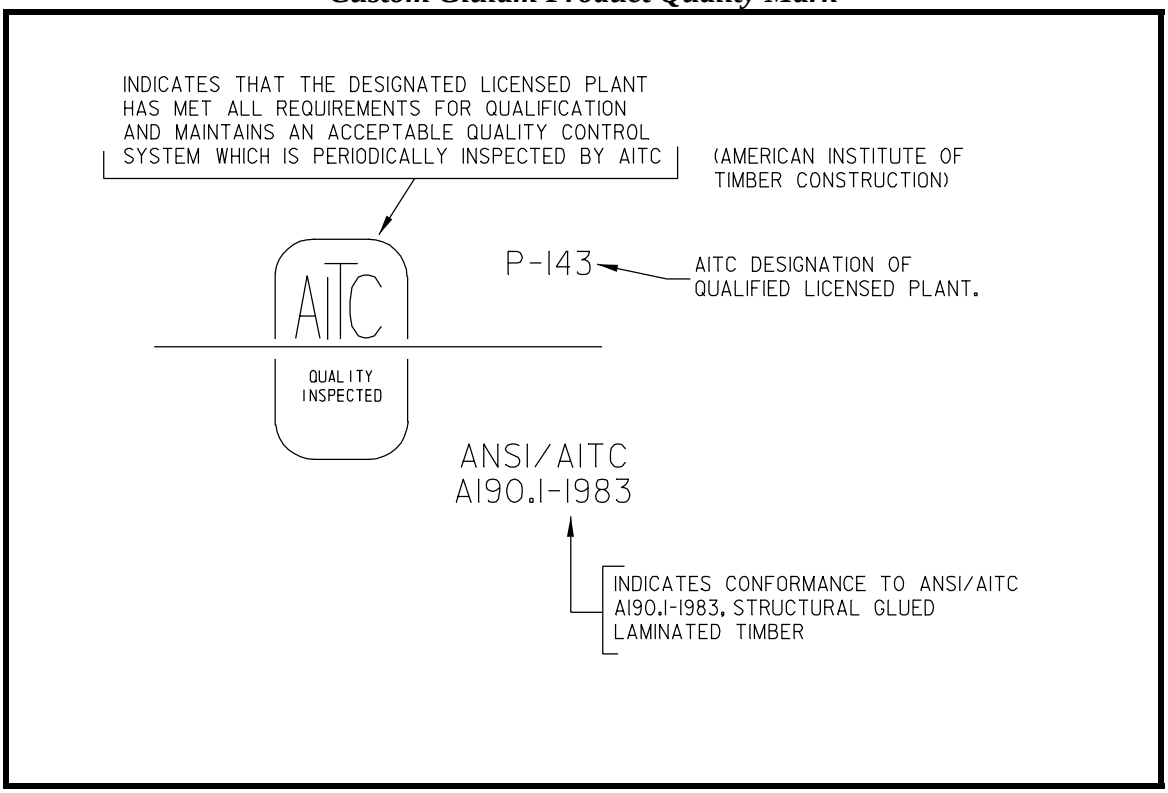

Tabulated allowable values and modification values are published in the National Design Standard (NDS) based on grading rules established by grading agencies. The values most applicable to bridge design are found in the *AASHTO Specifications*, Section 8.4.1.1.4. Separate tables are published for visually graded sawn lumber, mechanical stress rated (MSR) lumber, glue laminated members, and piles. The tables give allowable stress values for bending, tension, compression, and modulus of elasticity. The tables for visually graded lumber also contain values for shear and compression parallel to the grain.

In all cases, the engineer must exercise judgment to apply the condition of use adjustment factors to the specified preservative treatment, structural use, and environmental conditions.

8.3.4.1 Allowable Stress Values for Glulam Timber

Tabulated allowable stress values of glulam are specified in the *AASHTO Specifications*, Section 8.4.1.2.3. This table includes bending about the X- and Y-axes and axially loaded conditions.

8.3.4.2 Adjustments to Tabulated Values

Tabulated values for sawn lumber and glulam are based on standard use conditions noted in the applicable tables. Frequently however, the actual values reported are not based on the same condition of use as the design application. Requirements for

adjusting tabulated values are given in the *AASHTO Specifications*, Section 8.4.4 and the National Design Standard (NDS). The type and magnitude of the adjustments, as well as the manner in which they are applied, vary with the type of material, strength property considered, and design application. Designers apply the modification factors by multiplying them by the tabulated value. Some modification factors are:

- **CM, moisture content factor**—compensates for the decrease in wood strength and stiffness as moisture content increases.
- **CD, deck factor**—compensates for the increased resistance to bending caused by stress laminating sawn lumber decks. Not to be used for stressed glulam panels.
- **CF, size factor**—tabulated values are based on standard size members. For larger members, strength decreases.

8.4 PRESERVATIVE TREATMENTS

Wood used in most bridge applications is attacked by agents that cause it to decay and lose strength. To protect the structure from decay and deterioration, wood used in bridge applications is treated with preservatives. All wood preservatives in their liquid form are hazardous waste; however, wood that has been treated is not considered hazardous waste.

Agents that cause wood to decay are called biotic agents, e.g., fungi and insects. Biotic agents require the following four conditions for survival:

- Moisture levels in the wood above the fiber saturation point.
- Free oxygen.
- Temperature between 50 and 90°F.
- Food (i.e., wood)

Wooden substructure elements buried or permanently submerged are safe from decay due to lack of free oxygen. All other elements of the bridge, however, are vulnerable to attack.

8.4.1 TYPES OF WOOD PRESERVATIVES

The most common method of controlling deterioration of wood is by making the food source toxic. Thisis done by introducing toxic preservative chemicals into wood cells using a pressure treatment process. Four basic types of wood preservatives are available: creosote, pentachlorophenol, waterborne preservatives and copper naphthenate.

8.4.1.1 Creosote

Creosote, the oldest wood preservative, was first patented in 1831.

Creosote used for wood treatment is derived from the distillation of coal. The use of creosote in bridge applications should be done according to AASHTO standard specifications. In marine environments, 20 lbs/ft^3 [320 kg/m^3] of creosote shall be retained. In non-marine environments, 12 lbs/ft^3 [190 kg/m^3] of creosote shall be retained.

The excellent record of creosote as a wood preservative is well documented, with many applications providing more than 50 years of performance. Additional advantages of creosote are that it protects the wood from weathering and retards splitting associated with changes in moisture content. However, creosote does

not provide protection from a species of marine borer in warm saltwater.

The use of creosote has recently declined due to an increased desire for clean surfaces and complaints about handling creosoted wood. Most creosote used today is for applications involving minimal human contact. Current DelDOT practice is to not specify creosote treatment on highway bridges; creosote is specified on railroad bridges in accordance with AREMA Specifications.

8.4.1.2 Pentachlorophenol (Penta)

Penta is a synthetic pesticide derived from oil. Three types of Penta are manufactured: heavy oil, butane gas and light solvent. Heavy oil type penta, known as Penta Type A, is used in DelDOT bridges. Five percent Penta Type A is used by DelDOT to treat longitudinal decks, bridge rail and guardrail in accordance with the specifications.

Once treated, the surface is not paintable and should not be subjected to animal or human contact. Penta is preferred on timber decks because it seals out moisture that prevents warping and splitting. It is preferred on rails for the same reason and also because it leaves the wood with a rich brown appearance.

Penta is not effective against marine borers. Additionally, the EPA has placed penta on a list of restricted-use chemicals due to the trace presence of dioxins. Treated wood, however, is not considered hazardous waste by the Delaware Solid Waste Authority.

Hot-mix surfaces should not be placed on timber decks that have penta bleeding from the surface. In these cases, an approved blotter such as “Dry Sweep” is used to remove the free liquid preservatives.

8.4.1.3 Waterborne Preservatives

Waterborne preservatives include formulations of inorganic arsenical compounds in a water solution. These chemicals leave the wood surface relatively clean with a light green, gray-green, or brown color depending on the type of chemical used. Unlike the oil-based preservatives, waterborne formulations do not cause skin irritation and are suitable for use in areas of limited human or animal contact. After drying, the wood surface can also be painted or stained.

Waterborne preservatives shall conform to the DelDOT Specifications.

A disadvantage of waterborne preservatives is that they do not provide the protection from splitting and cracking due to moisture change that oil borne and creosote preservatives do. Waterborne preservatives do provide effective protection in marine environments where borer hazards are high.

8.4.1.4 Copper Naphthenate

Copper naphthenate is another type of oil-based wood preservative. Although not currently used for DelDOT applications, this wood preservative has proven itself in long-term stake tests. Its primary advantage is that it is considered environmentally safe and is not on the EPA’s list of restricted use pesticides. The primary disadvantage of this material is higher cost.

8.4.2 TREATED TIMBER SPECIFICATIONS

Specifications for the preservative treatment of wood are maintained by The American Wood Preservers Association (AWPA), AASHTO, the American Institute

of Timber Construction (AITC), and the federal government. AWPA standards are the most comprehensive and widely used source of specifications and treating process procedures for sawn lumber, glulam, and piling used for timber bridges. AASHTO's M133 specification closely parallels and references the AWPA standard.

8.4.2.1 Design Considerations

When selecting the most appropriate preservative treatment method, the designer should consider dimensional stability and surface appearance. In general, however, DelDOT prefers the use of waterborne preservatives on all exposed members except glue laminated members, bridge rail and guardrail where pentachlorophenol is preferred.

Dimensional stability is obtained by maintaining constant moisture content. Oil-based treatment methods provide dimensional stability by creating a water-resistant barrier on the wood surface. This reduces associated splitting and checking of the wood, which can provide an avenue for entry of fungi and insects.

Oil-based treatment methods provide a less desirable surface appearance than waterborne treatment methods. This is due to the bleeding of oil-treated members. The most severe bleeding typically occurs in members exposed to direct sunlight. In most cases, a small amount of bleeding is not harmful. Bleeding can be minimized by correctly specifying the treatment method. Ways to reduce bleeding are to:

- Specify the correct retention rate for the species, type of use, and preservative. AWPA provides recommended retention rates.
- Specify empty cell process rather than full cell treating.
- Use clean creosote containing lower levels of xylene in solution.
- Use expansion baths at the conclusion of the treatment cycle.

8.5 HARDWARE

Hardware consists of any type fastener used to connect two or more timber members.

Proper design of hardware is important because it provides continuity to the member as well as strength and stability to the system. Connections shall be designed in accordance with the *AASHTO Specifications*, Chapter 8.4.2. Additional information may be obtained from the *National Design Specification for Wood Construction* (*NDS*).

There are two basic types of connections: lateral and withdrawal. Lateral (shear) connections transmit force by bearing stresses developed between the fastener and the members of the connection. Withdrawal connections transmit load by pull-out resistance. Typical lateral and withdrawal type connections are shown in Figure 8-3. The different types of connection hardware available are shown in Figure 8-4 and described below:

- **Bolts**—Used in both lateral and withdrawal type connections where moderately high strength is required. Nuts and washers are applied to maintain tightness and transfer load. In lateral connections, load transfer takes place as bearing between the shaft of the bolt and the timber member. In withdrawal connections, load transfer takes place as bearing between the bolt head or washer and nut.

- **Timber connectors**—A steel ring or plate bolted between laterally loaded members. They provide high strength due to their large bearing area. Load transfer takes place as bearing between the plate and the member.
- **Lag screws**—Used similar to bolts but provide lower strength. This type of connection can be used in both lateral and withdrawal type connections. Thread interaction with the wood provides strength in withdrawal type applications. In lateral connections, the strength mechanism is bearing between the shaft of the screw and the timber member. Lag screws are typically used where access to the connection is convenient from only one side.
- **Nails and spikes**—Driven fasteners are used primarily for non-structural applications. This type of fastener is susceptible to loosening due to vibration and moisture change.
- **Drift bolts and drift pins**—long unthreaded bolts or pins driven into pre-drilled holes. These are typically used for lateral connection of large timber members and are not suitable for withdrawal connections due to low resistance to withdrawal.

Selection of a fastener type depends on the type of connection and required strength. Connections must be designed to transmit the load throughout the life of the structure without causing splitting, cracking or deformation of the wood.

Washers should be used under fastener heads that are in contact with wood. Washers may be omitted under heads of special bolts when the size of the head is sufficient to develop connection strength without excessive wood crushing. Corrosion protection of washers should be hot dip galvanizing in accordance with AASHTO specification M111 or M232. Common washer types for timber connections are shown in Figure 8-6.

8.6 SUPERSTRUCTURE DESIGN CRITERIA

The design of timber bridges closely parallels that of other types of bridges. The design method used for timber bridges is the LRFD Method as specified in the *AASHTO Specifications* Section 8. In the LRFD method, the factored loads on the bridge must be less than the factored resistance for the material. Beams are designed for bending, buckling, deflection, shear, and bearing. Tension members are designed for axial stress. Compression members are designed for axial stress, buckling, and bearing stress. Design of timber structures is typically governed by deflection, shear and connections.

Important in the design of timber structures are loads, impact, buoyancy, and deflection. These factors as they relate to timber bridges will be discussed in the following sections. For additional superstructure design criteria, refer to Sections 2.5 and 2.6 of this manual.

8.6.1 LOADS

Loads shall be in accordance with Chapter 3 of the *AASHTO Specifications*. Load combinations and load factors shall be applied for the various limit states given. Structural elements are sized based on limit state loads, which produce the maximum stress.

8.6.1.1 Load Distribution

Load distribution of timber longitudinal deck type bridges shall be in accordance with the *AASHTO Specifications* Section 4.6.2.3, Equivalent Strip Widths for Slab Type Bridges. Load distribution of existing timber beam type bridges shall be in accordance with the *AASHTO Specifications* Section 4.6.2.2, Beam-Slab Bridges.

8.6.1.2 Impact

Impact increases the equivalent static load due to bouncing and vibration caused by moving loads. The impact factor used in determining factored loads for timber bridges is reduced by 50% from that used for steel and concrete bridges. This is due to the excellent shock absorbing capability of timber materials. Impact factors shall be applied in accordance with the *AASHTO Specifications* Section 3.6.2.3, Dynamic Load Analysis of Wood Components.

8.6.1.3 Buoyancy

Buoyancy is the resultant upward force acting on a submerged body. Buoyancy must be considered for any portion of a bridge that is or may be submerged. Buoyancy reduces the forces resisting overturning loads. Substructure overturning loads are typically stream current and wind loads. Foundation elements and connections must be sized to resist overturning when buoyant effects are considered.

8.6.2 DEFLECTION

Deflection of timber structures is based on service loads and is limited to 1/425 of the span length. Deflection should be based and calculated using the equivalent width, as calculated for moment.

8.7 LONGITUDINAL DECK DESIGN

Longitudinal timber deck bridges are typically constructed of glue laminated deck panels that are stressed together using threaded steel rods. Longitudinal decks act as a slab; therefore, they are subject to bending and shear in both the longitudinal and transverse directions. Longitudinal bending controls the deck thickness, while transverse bending, shear and deflection controls the compressive prestress that must be applied. Examples of the effects of transverse bending and shear are shown in Figure 8-7. Decks should be designed to minimize these effects. Design guidance for stress laminated timber decks is found in Section 9.9.5 of the *AASHTO Specifications.*

Figure 8-3
Typical Lateral and Withdrawal Connections for Timber

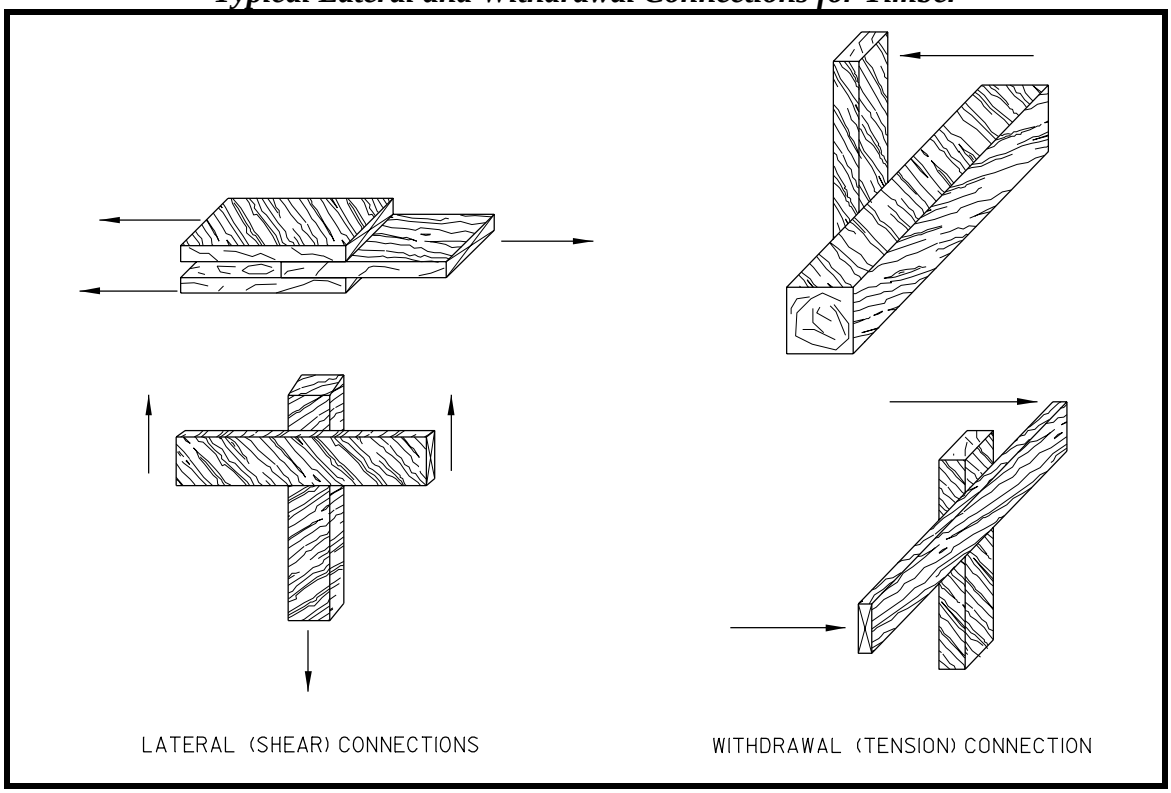

Figure 8-4
Types of Fasteners Used for Timber Bridges

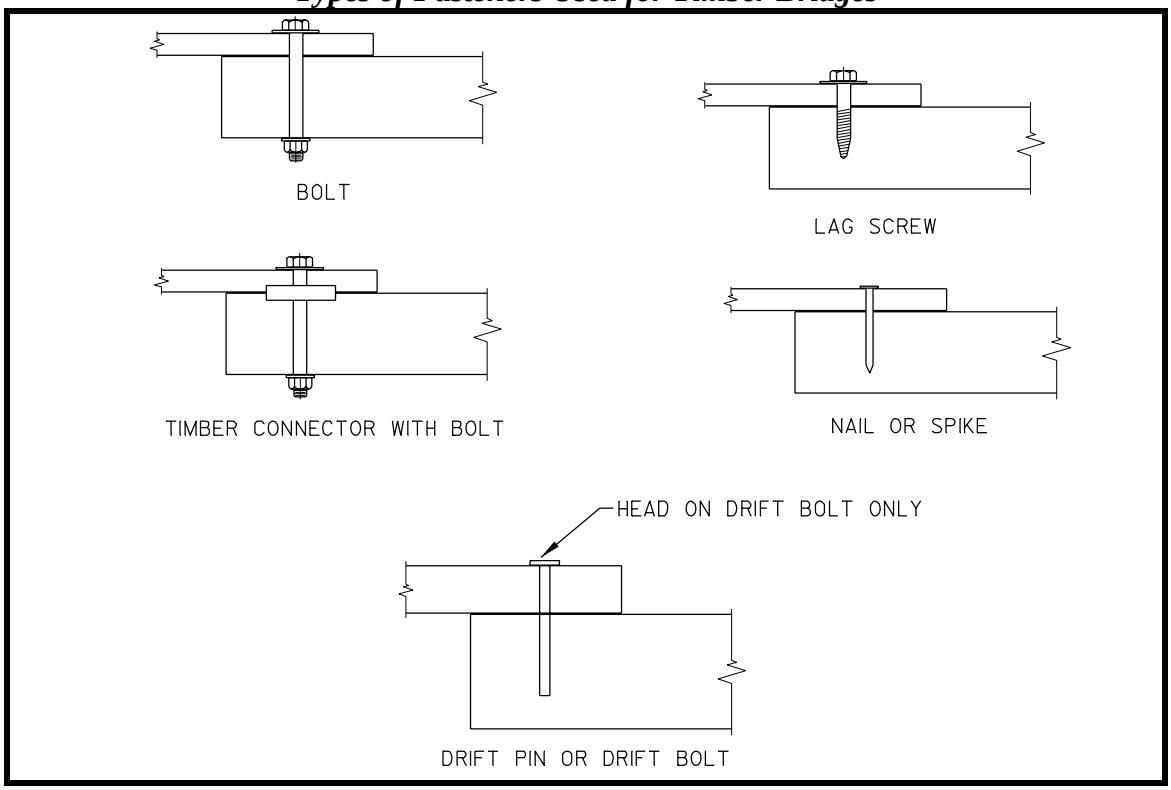

Figure 8-5a
Nailing and Uplift Spike Details

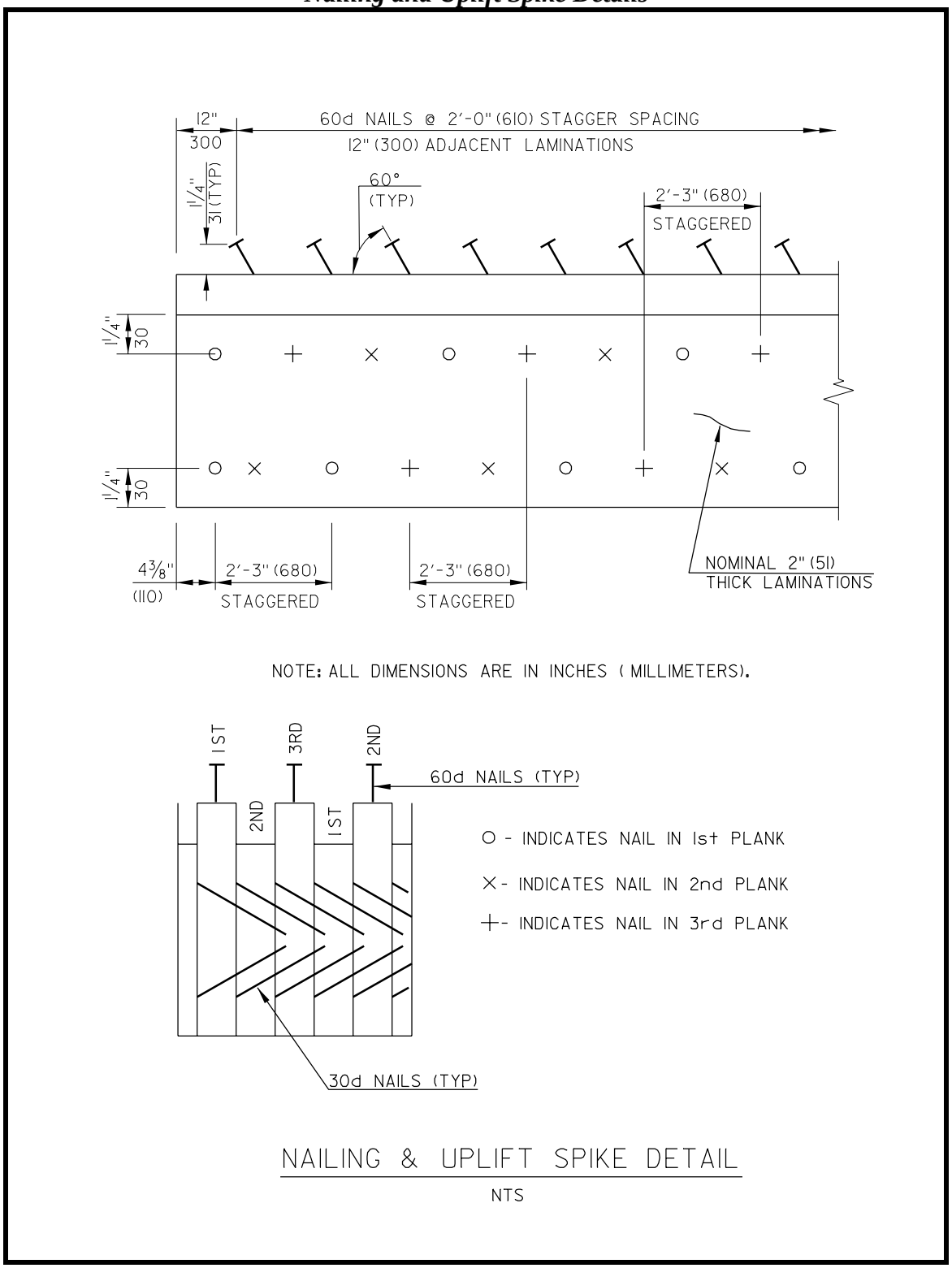

Figure 8-5b
Allowable Withdrawal Load (U.S. Customary)

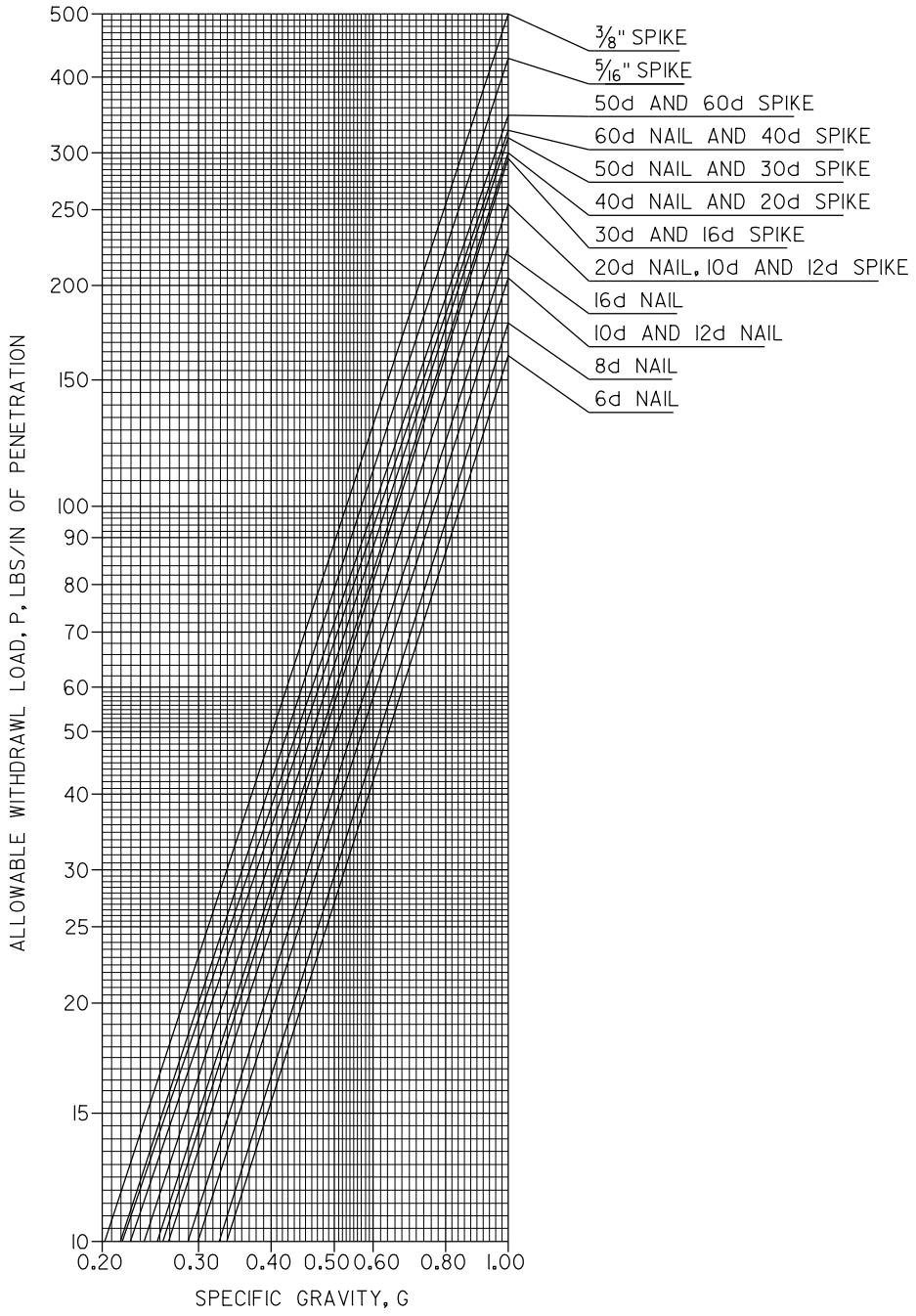

Figure 8-5c
Allowable Withdrawal Load [Metric]

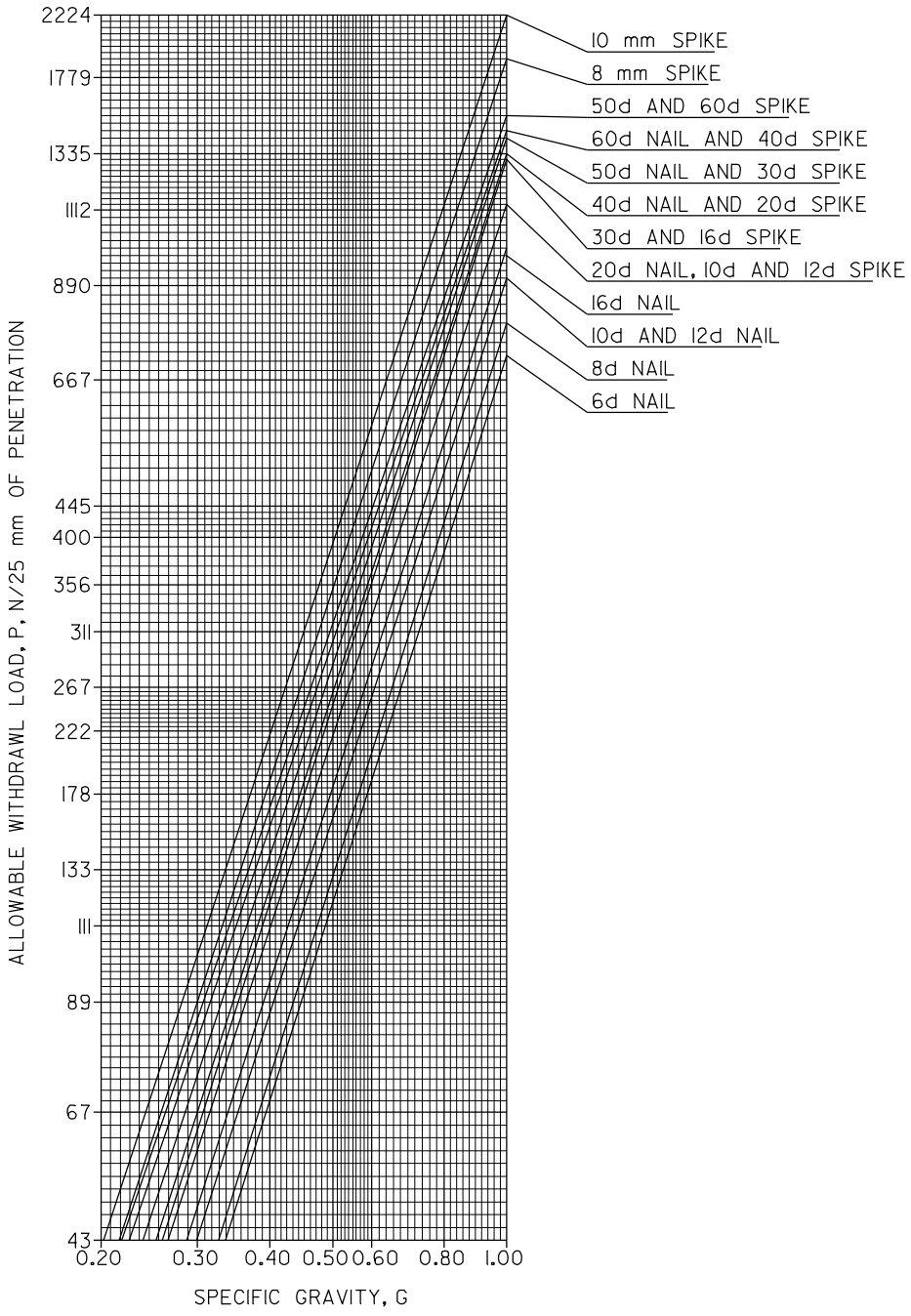

Figure 8-6a
Common Washer Types for Timber Connections

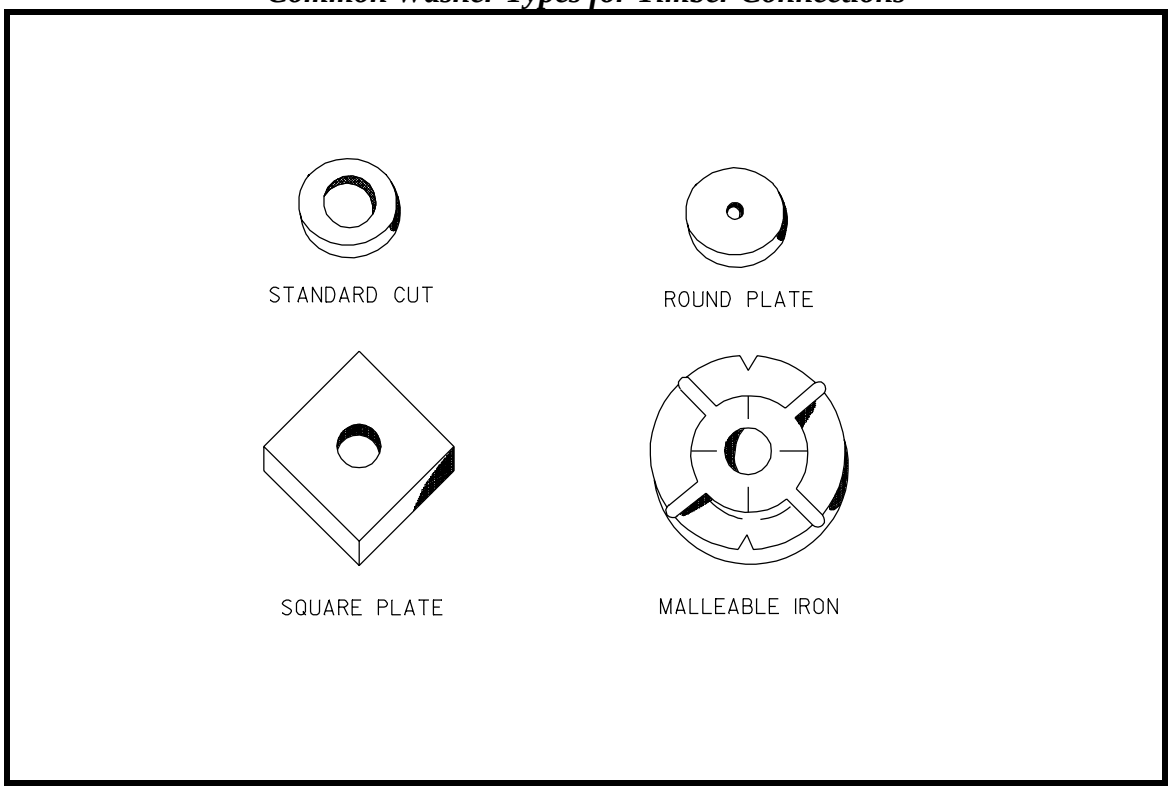

Figure 8-6b
Allowable Lateral Load (U.S. Customary)

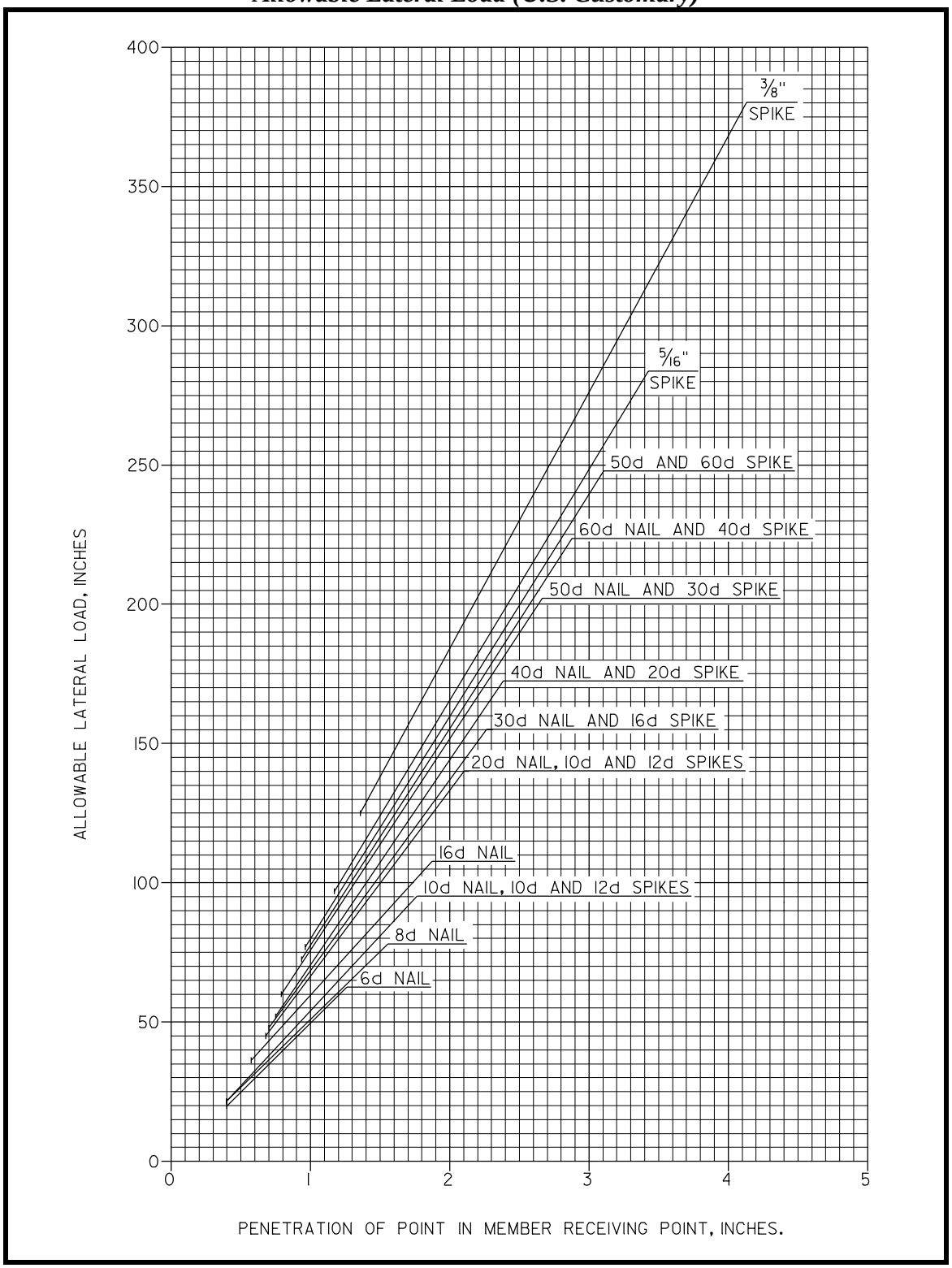

Figure 8-6c
Allowable Lateral Load [Metric]

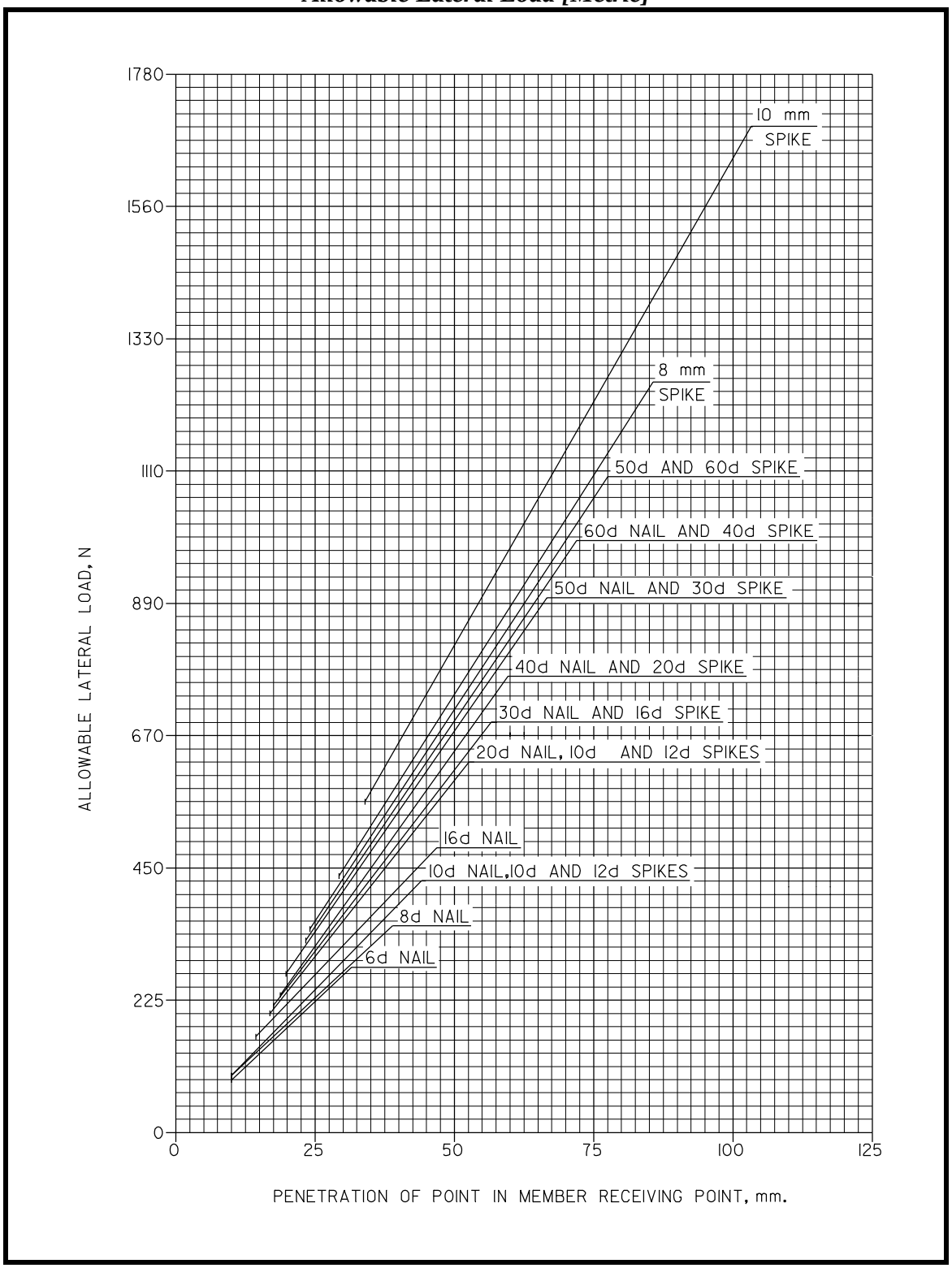

Figure 8-7
Transverse Bending and Shear

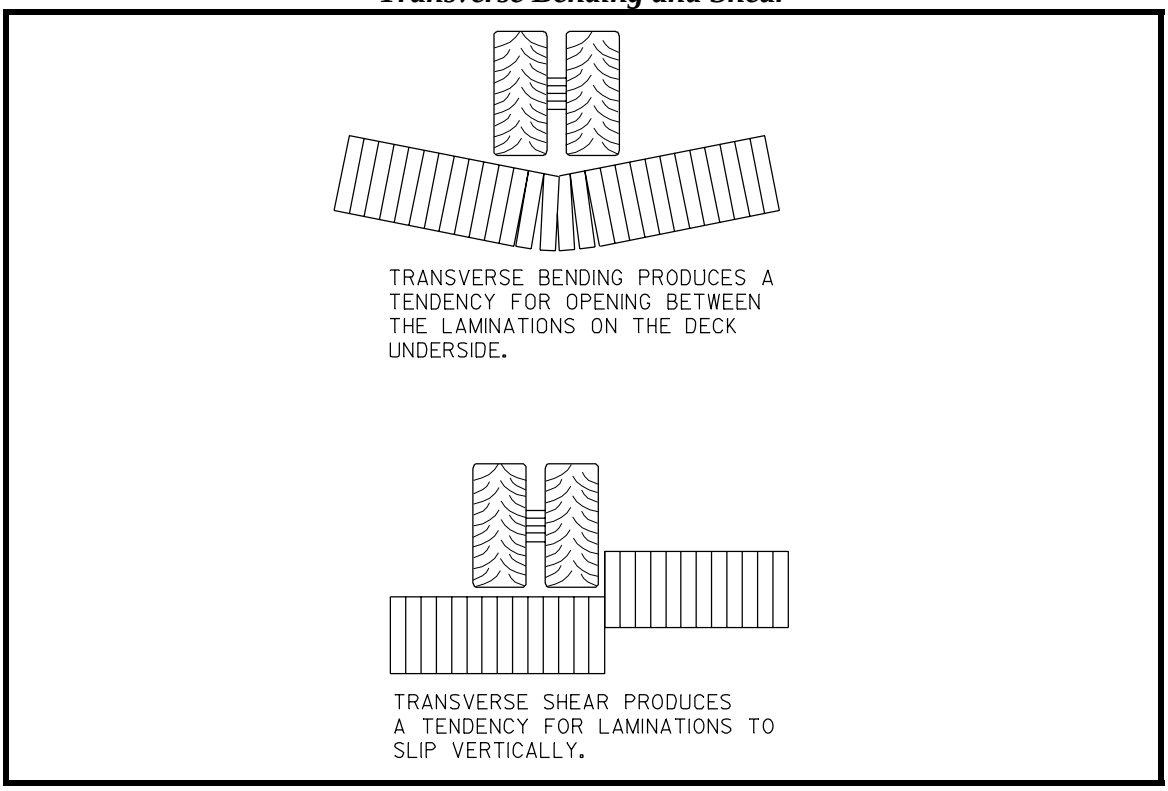

Glue laminated deck panels for longitudinal timber deck bridges are prefabricated and treated off site in 3 to 5 ft [0.9 to 1.5 m] wide sections. The panels are constructed by gluing together timber planks which are 1 ½" [38 mm] thick for western species and 1 3/8" [35 mm] thick for southern pine. These timber planks are stress-rated and glued together with a wet-use structural adhesive to form panels. Preservative treatment of the lumber is with pentachlorophenol, an oil-based preservative which limits moisture content changes and associated dimensional changes in lumber that can result with change in moisture content. The species of lumber used in wood lamination should be as specified in Section 8.2.1.

Unlike most sawn lumber, the size specified for longitudinal decks is the actual dimensions of the member, rather than the nominal size. Standard widths are based on dressed sizes of sawn lumber. Once glued, panels are then surfaced. Glulam panels, however, are not surfaced on the top side to provide better bond between the lumber and wearing course.

To provide stiffness to the deck and limit differential movement, glulam panels are transversely post tensioned. The prestressing system consists of prestressing elements and anchorage. The prestressing elements are normally threaded rods that conform to ASTM A722, Un-coated High-Strength Steel Bars for Prestressing Concrete. The rods have a minimum

ultimate stress in axial tension of 150 ksi [1034 MPa] and are available in diameters of 5/8 in [15.9 mm] to 1-3/8 in [35.0 mm]. Anchorage consists of a nut bearing on either a channel or plate. The rods are placed at regular intervals and can be run either internal or external to the timber planks. All new construction shall have internal rods. Once all components are in place, the rods are tightened on the panels using a hydraulic jack, thereby creating sufficient friction between the panels to cause them to perform structurally as a unit. See Figure 8-8a.

The post tensioning system must be protected from corrosion. The rods and associated hardware are typically hot-dipped galvanized in accordance with ASTM A123, A143 and A153. Precautions shall be taken to prevent hydrogen embrittlement of the high-stress rods. Polyethylene sleeves with hydrophobic grease may be used with galvanization.

The stressing sequence of the rods is very critical due to time-related stress loss. However, if losses can be limited to a maximum of 60%, the deck will still perform adequately. Stressing is generally carried out from one end of the bridge to the other in a series of passes. As each rod is stressed, it reduces tension on adjacent rods. Therefore, the rods must be re-stressed. Typically a uniform stress level can be achieved after a total of 4 passes during initial stressing. After initial stressing, re-stressing should be performed at 1 week and 5 weeks. Multiple passes may again be required to achieve uniform stress. Additional stressing can be carried out later as part of routine maintenance if required. The overall system is very stiff and provides a firm base for an asphalt surface. With this type of construction, spans of up to 30 ft [9 m] are possible.

The following are some of the advantages of this system:

- Decks can be prefabricated locally.
- Decks act as one unit (i.e. no differential movement of panels or laminations), which does not adversely affect the wearing surface.
- Re-stressing the deck as necessary can control delamination.
- Members can be spliced suitable for fabricating almost any length.
- This method can be used to rehabilitate delaminating glue and nail laminated decks.

To decrease construction time, decks can be prefabricated off-site and brought to the job site already stressed. This eliminates the need for repeated trips to the site to stress the bridge.

Allowable stresses for glue laminated panels are given in the *AASHTO Specifications*, Section 8. Guidance for design of longitudinal glue and stress laminated decks is provided in the *AASHTO Specifications*, Section 9, and the United States Department of Agriculture (USDA) *Timber Bridge Manual*, Chapters 8 and 9, respectively. The designer should check available sizes of glue laminated members prior to specifying them.

8.8 RAILING FOR TIMBER DECKS

Railings are provided on timber bridges to safely restrain an impacting vehicle, bicycle, or pedestrian. AASHTO specifications require all bridge rails to meet two requirements. First, the railing must be tested and approved in accordance with

NCHRP Report 350, Tested Roadside Hardware. Second, the rail must be mounted to the deck with sufficient strength to withstand a static load as described in Section A13.2 of the *AASHTO Specifications*. A typical DelDOT timber bridge rail consisting of horizontal members mounted on timber posts is shown in Figure 8-8. This railing provides performance level 1 protection. Glulam parapets can also be used as railings. More economical systems may be available.

Standard plans for crash-tested bridge railings for longitudinal wood decks are contained in the *USDA General Technical Report FPL-GTR-87*.

8.9 HOT-MIX WEARING SURFACES FOR TIMBER DECKS

Wearing surfaces are placed on some bridge decks to form the roadway surface. The wearing surface is important because it is the only part of the bridge that comes in direct contact with vehicles. Therefore, the wearing surface provides ride quality and skid resistance for vehicles and protects the timber deck from abrasion and wear.

Hot-mix pavement is the preferred wearing surface on timber bridges in Delaware. Hot-mix pavement protects the wood from abrasion and moisture and provides a smooth, skid-resistant surface. Hot-mix pavements normally perform well; however, the following factors can influence compatibility:

- Deck deflection, which must be limited to prevent cracking.
- Method of preservative treatment and amount of excess preservative.

The top of deck elements should be left rough to insure bonding with bituminous materials. The hot-mix used should be 1 in [25 mm] minimum Type C Hot-mix. Waterproof membranes are not used under the hot-mix. When practical, the deck should not be paved for 30 to 45 days after the deck material has been treated with preservative. Before the wearing surface is placed, the surface shall be cleaned of any excess preservative oil with the application of a surface blotter (“Dry Sweep”) in order to improve hot-mix bonding. Prior to placing the hot-mix, a tack coat should be applied to bond the hot-mix to the deck. The overlay should be crowned at a 2% minimum cross slope to insure adequate drainage of the deck.

8.10 SUBSTRUCTURE DESIGN

The substructure is the portion of the bridge that supports the superstructure and transfers load to the supporting soil or rock. Substructures normally consist of abutments and pile bents.

Design of piles and retaining walls is described in Chapter Six. Material properties of the timber components are given in the *AASHTO Specifications*, Section 8.4, Material. Preservative treatment of all substructure elements should be carried out as per Section 8.4 of this manual.

8.10.1 TIMBER ABUTMENTS

Abutments support the ends of the bridge. Timber abutments are typically supported on timber piles with glulam or sawn lumber pile caps. Abutments are constructed with vertical faces. Vertical faces require the abutment to act as a retaining wall. The abutment designed should consider scour

and scour protection. Vertical face abutments constructed of timber sheeting consist of two layers of boards placed behind piles or posts. The first layer, horizontal backing, is attached horizontally to the piles or posts. The horizontal backing is placed to a depth of one foot [0.3 m] below the mud line. Vertical tongue and groove sheeting is then driven behind and attached to the horizontal backing. A geotextile fabric is attached to the back layer of boards to ensure that backfill material does not escape through the joints and cause settlement of the backfill. See Figure 8-9.

8.10.2 TIMBER BENTS

Timber bents are typically constructed with timber piles. Pile bearing values shall be as described in Section 6.2.2.4. Care must be applied to ensure that the top of the pile is protected from moisture. Moisture protection for the tops of piles is usually provided by covering the top of the pile with a zinc or copper cover plate, folded down over the sides of the pile a distance of at least 3 in [75 mm] and firmly nailed in place with galvanized or copper nails. See Figure 8-10.

8.10.3 TIMBER FENDERS

Timber fenders are normally placed around piers and abutments whenever they are in or near a navigable channel. Timber fenders protect substructures from impacts with a moving vessel. Fenders should be designed to absorb the impact of the largest vessel anticipated to use the channel. Fenders also delineate and guide boat traffic through the bridge opening.

Figure 8-8a
Typical Timber Bridge Rail and Stressing Rod Layout Example

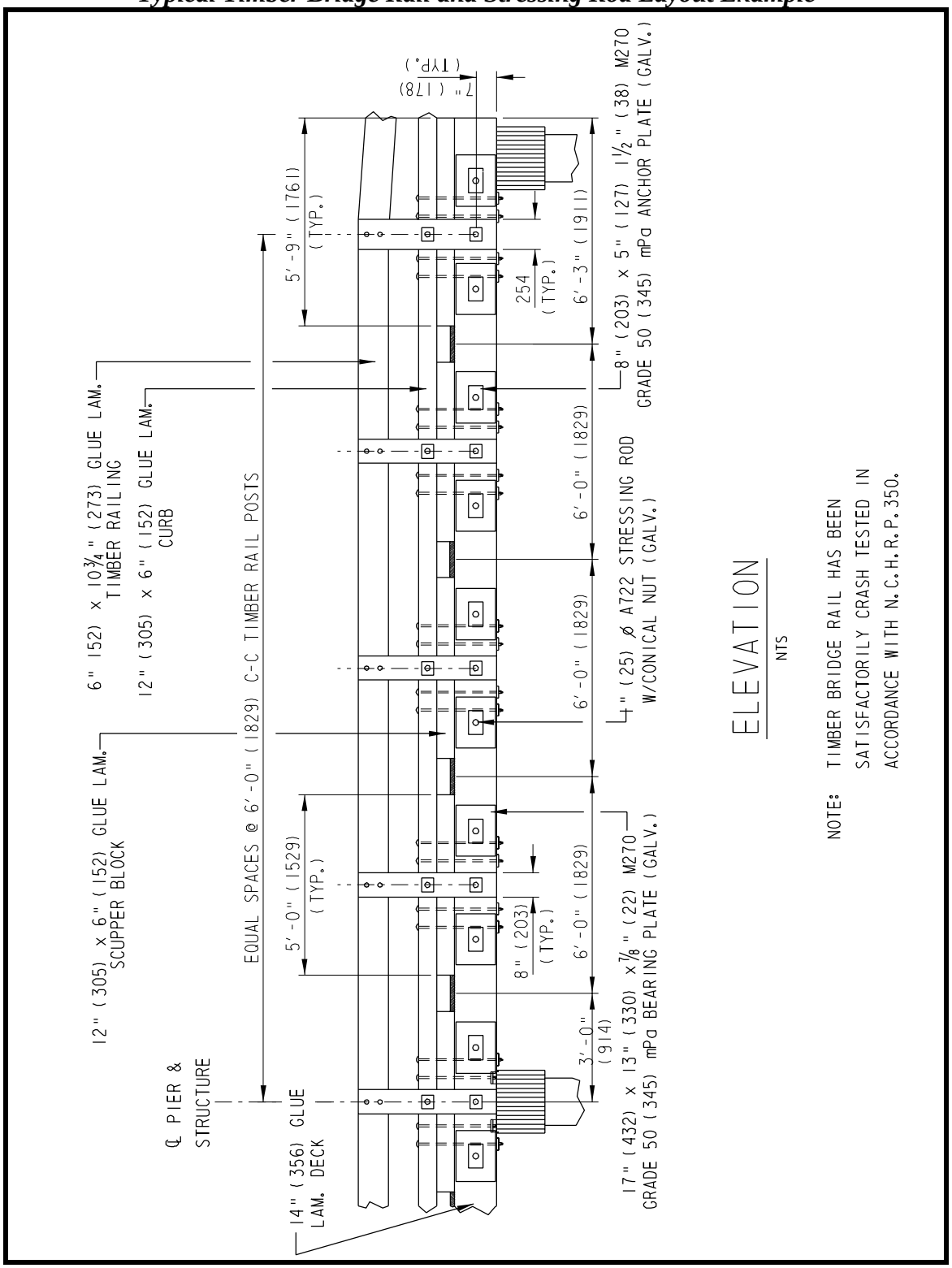

Figure 8-8b
Typical Timber Bridge Rail

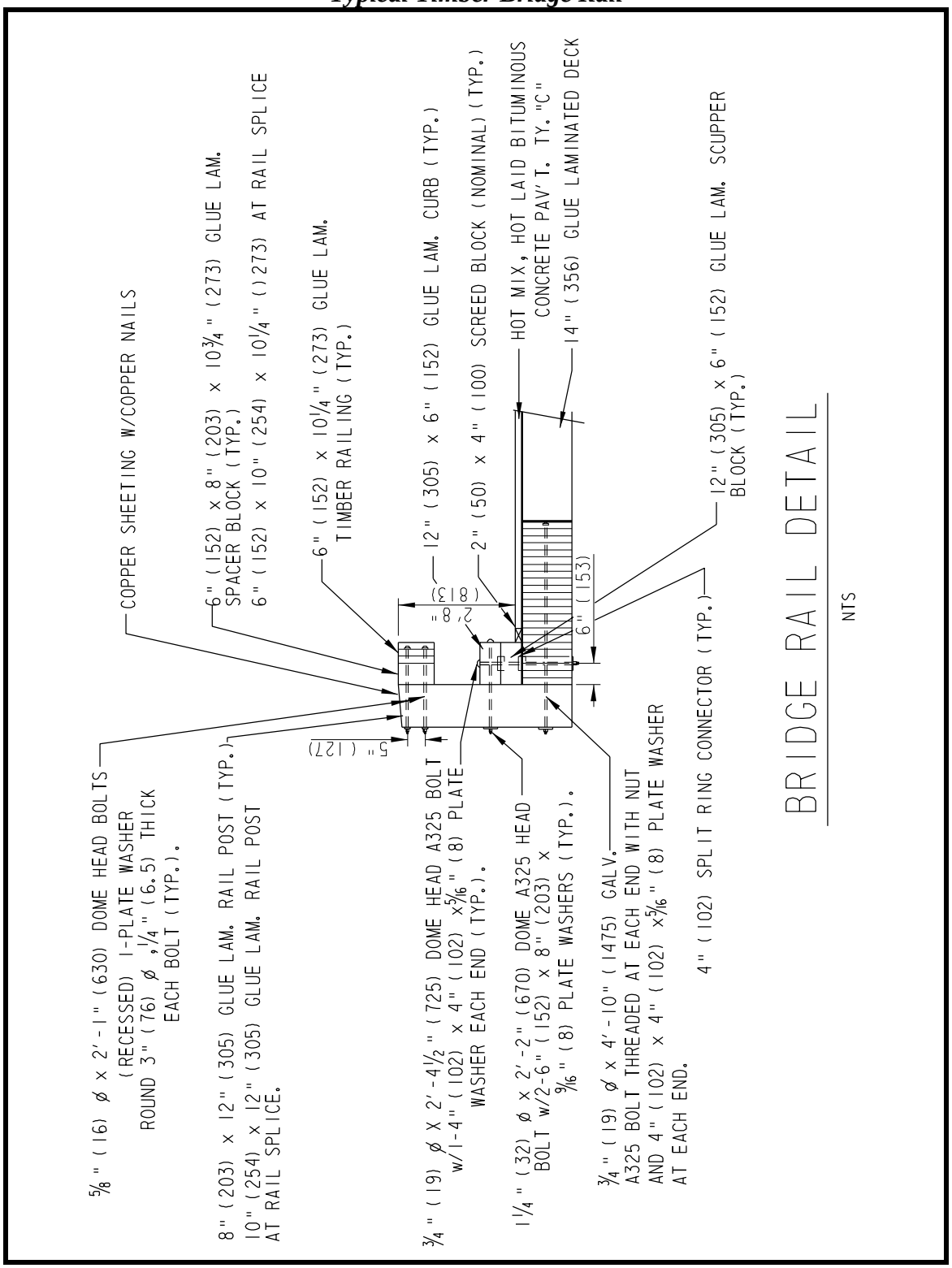

Figure 8-9
Pile Supported Abutment Detail

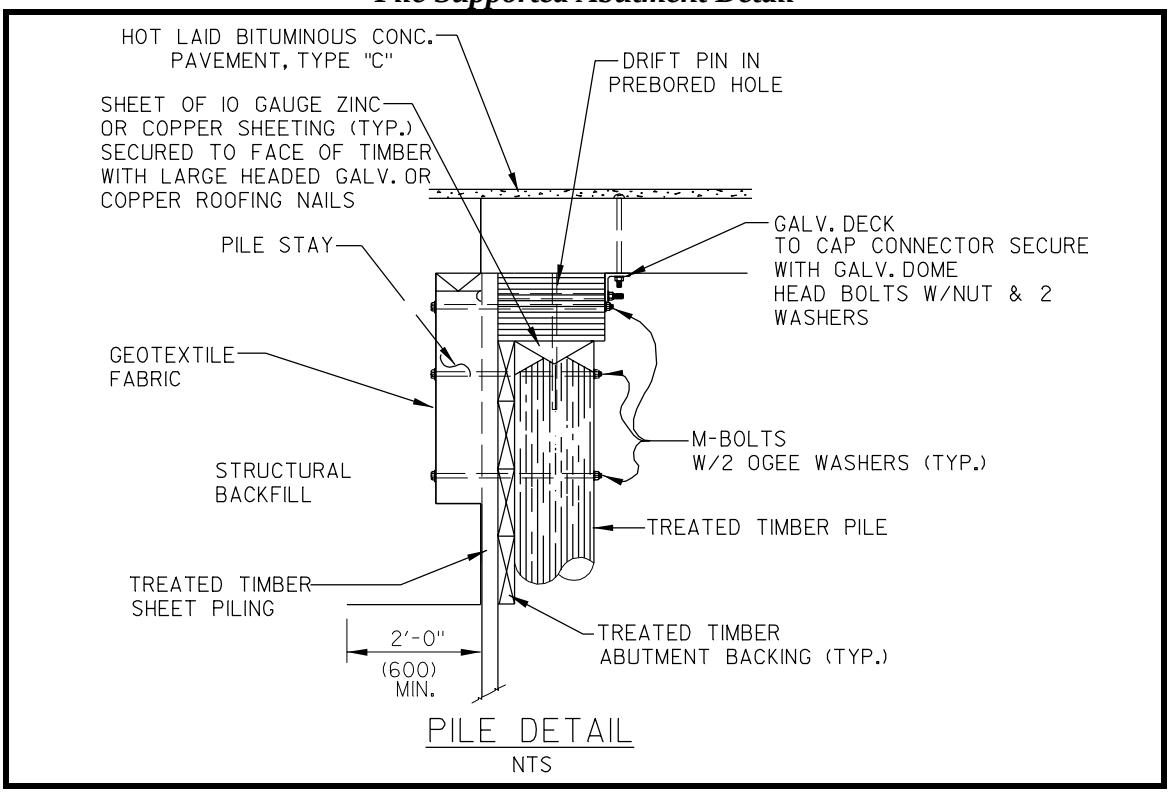

Figure 8-10a
Pile Supported Bent Example

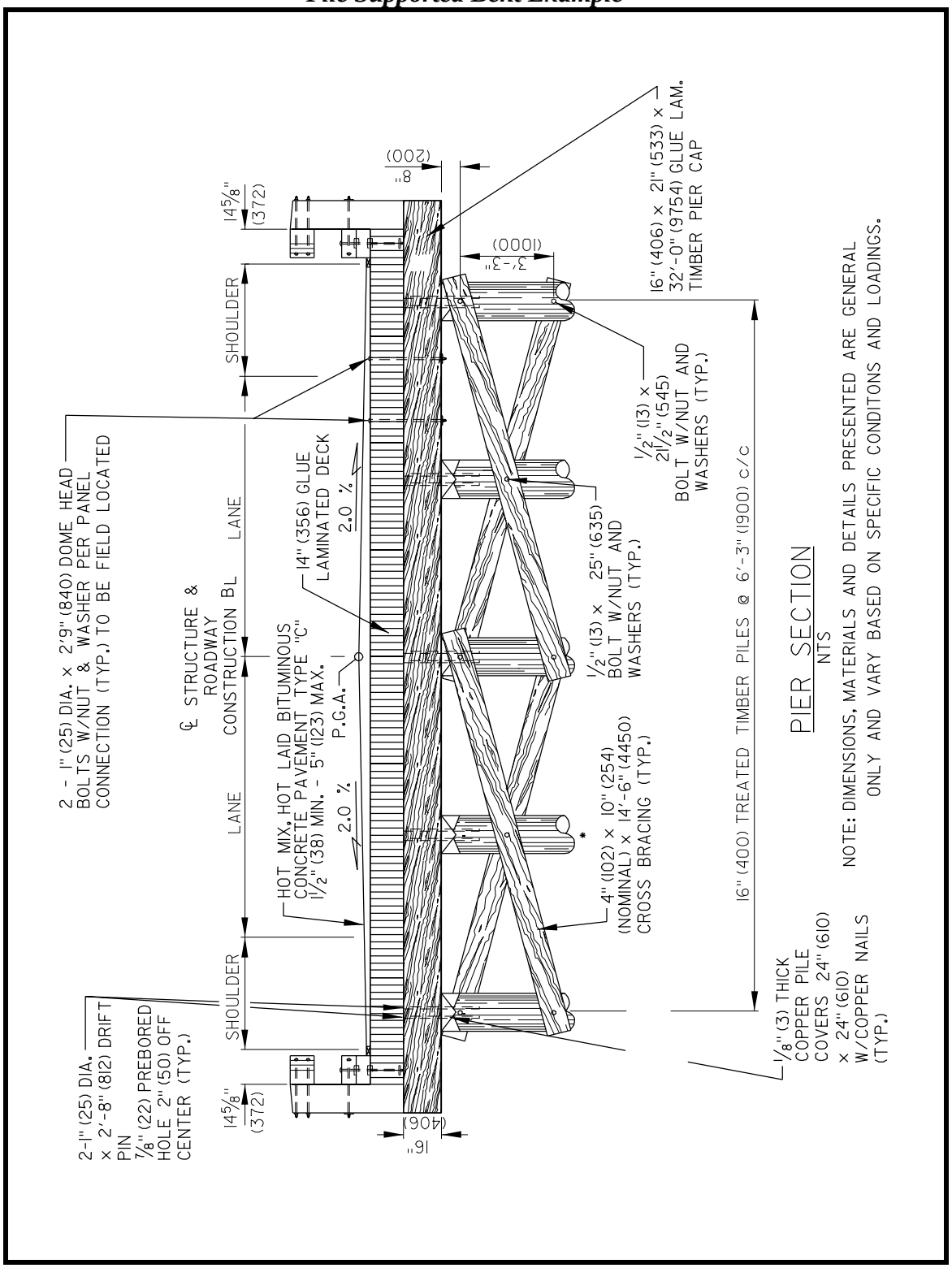

Figure 8-10b
Typical Shear Developer Detail

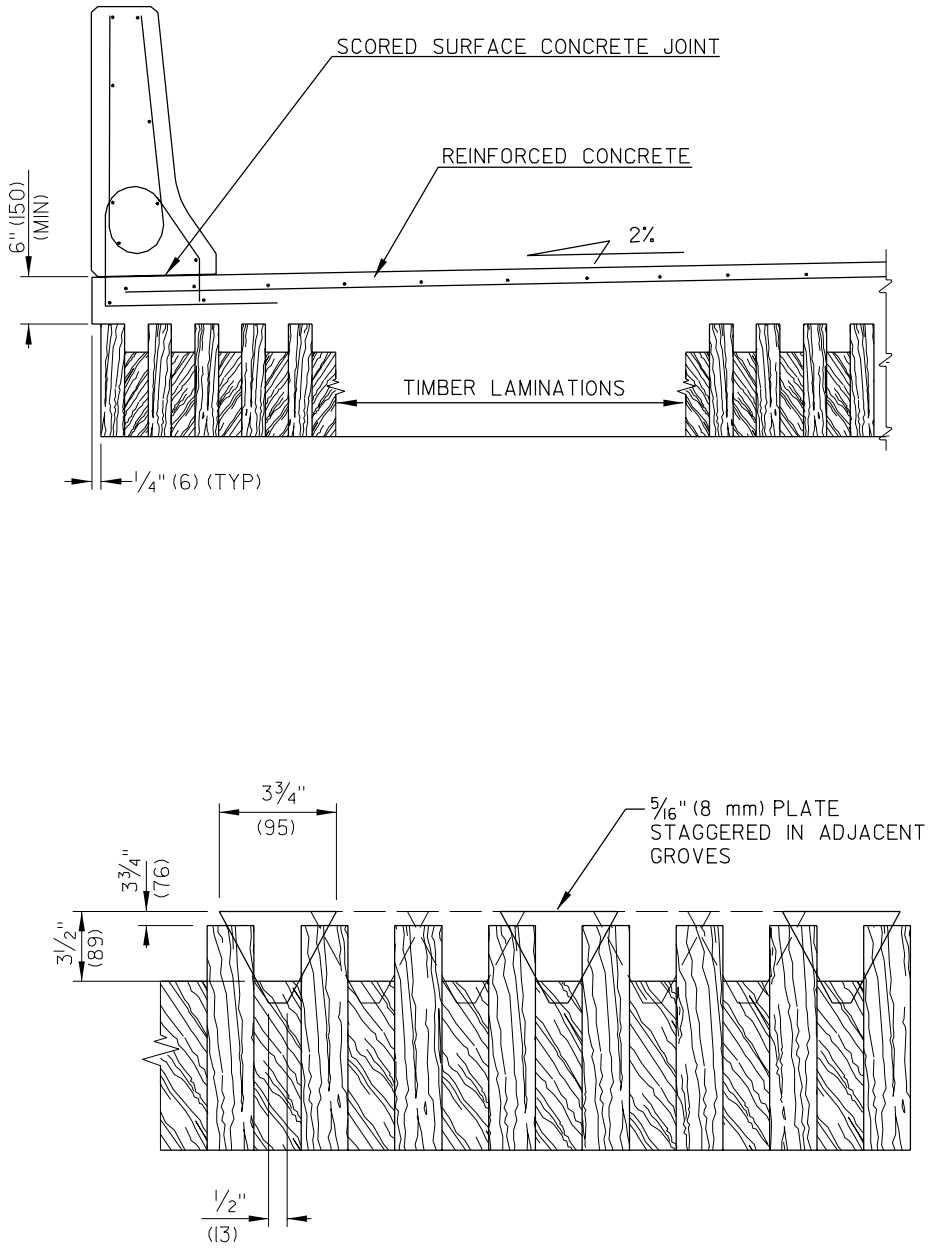

Chapter Nine

Rehabilitation of Existing Bridges

9.1 INTRODUCTION

The Department evaluates several factors in the identification and prioritization of bridge rehabilitation candidates. These include:

- bridge sufficiency rating,
- historical significance,
- traffic volumes/ADT,
- bridge load capacity posting,
- bridge condition, including emergency repairs,
- length of detour, and
- economic analysis considering
    - repair,
    - rehabilitation,
    - replacement, and
    - life-cycle costs.

Sources for the above information include:

- the Bridge Management System (Pontis),
- the bridge safety inspection file and structure data records (SDR),
- traffic counts from Division of Planning,
- Delaware's historic bridges survey and evaluation,
- bridge load ratings, and
- the Bridge Paint Priority Listing.

Bridges are selected for improvement in accordance with those rankings. Most bridge rehabilitation projects are initiated through these rankings.

All Delaware bridges in the National Bridge Inventory (NBI) (bridges with spans greater than 20 feet [6.1 m]) are inspected periodically (at least every other year) to evaluate their condition and ensure the safety of the public. Bridges not on the NBI are inspected at least once every five years. Refer to Section 2.1 for size requirements for non-NBI bridges. Bridges not owned by the state are inspected by their owners. Bridges must be inspected to be eligible for federal-aid funds. Information from the inspections is entered into the Bridge Management System (BMS). The Department uses the Pontis Bridge Management System, which was developed through an AASHTO/FHWA joint development effort. Pontis provides a comprehensive ranking based on benefit/cost ratios for each bridge. It includes preventative maintenance strategies as well as replacement and rehabilitation options. Pontis is also used for multi-year optimizations for use in projecting budget needs.

For each bridge, the Bridge Management Section performs an NBI inspection and a Pontis element level inspection. NBI inspections provide an overview of the major bridge areas, i.e., deck, superstructure, and substructure, as well an appraisal of the structural adequacy and functionality of the bridge. Pontis element level inspections provide detailed inspection reports of each element on the bridge. Each element is divided into various condition states, representing differing degrees of deterioration. This information is used by the Pontis program to compute repair costs and benefits. DelDOT's use of the Pontis program will only address maintenance, repair, rehabilitation, or replacement recommendations based on element condition; the Pontis program will not address functional deficiencies. The Bridge Management Section runs a Pontis scenario, which optimizes and prioritizes repair recommendations for all DelDOT owned bridges. A list of the bridges will be generated which will include element quantities, recommended work, and cost estimates. The list will be screened for work that can be performed by the Districts, either by in-house forces or by structure maintenance contracts. The remaining bridges will be sent to the Bridge Design Section for investigation. This investigation will include a review of the inspection reports and a field review. Based on this list, bridges are added to the Bridge Design program, and are initiated as projects. Most Bridge Design projects are initiated through the Bridge Preservation Program.

Some bridges may have to be rehabilitated because of unforeseen emergency circumstances, such as fire damage, washouts, or structural damage from traffic. The priority given these emergency projects will depend on their impact on traffic, the ease of detouring traffic, and the severity of the deficiency. Eligibility for federal funding will be determined on a case-by-case basis. Refer to Section 2.3.3.

The Department relied heavily on the John Wiley & Sons, Inc. publication *Bridge Inspection and Rehabilitation: A Practical Guide* by Parsons Brinckerhoff, for remedial methods described in this chapter. This information is used with the permission of John Wiley & Sons, Inc.

9.2 ENVIRONMENTAL CONSIDERATIONS

The Department encourages recycling materials obtained from demolition of structures and roadways. However, the designer must be constantly aware of the environmental aspects of bridge rehabilitation. Many older structures utilized materials in their construction that are environmentally unacceptable today.

The designer must be aware of environmental permit requirements and conditions for removal and disposal of such materials or their by-products. Refer to Section 2.9 for regulatory agencies involved in the permit and approval process.

9.2.1 REPAINTING

The designer should check the reports from the Bridge Management System to determine whether the bridge steel is coated with lead-based paint. A request should be made to Materials and Research for testing of the existing paint to verify that it is lead based.

Before structural steel can be repainted, the steel must be cleaned. Cleaning steel to remove existing coatings involves airborne blast dust and blast by-product collection

and disposal. The Department requires 100 percent containment of blast by-products during cleaning according to the contract specifications. The coatings contractor is required to submit a containment plan and recovery system for approval prior to initiating work. Residue from non-hazardous-based paints is always classified as industrial waste. Residue containing hazardous-based paint is considered a hazardous material and must be tested. Handling and disposal of either hazardous material or industrial waste must be in accordance with State Department of Natural Resources and Environmental Control (DNREC) regulations. Wash water from cleaning structural steel must be handled and disposed of in accordance with contract specifications.

Another environmental concern is control of painting fumes. The Department specifies paints with low levels of volatile organic compounds (VOC) to reduce fumes.

9.2.2 RECYCLING

Recycling materials helps to conserve natural resources. For recycling hot-mix, see the Road Design Manual.

In an effort to recycle concrete construction materials, the designer is encouraged to utilize removed concrete for base materials for approach roadways or as riprap for slope protection, where possible. Broken concrete must meet the specification requirements for riprap.

9.2.3 DEMOLITION

The designer must evaluate alternate demolition methods, including the need to provide demolition shields, during design and specification development to ensure that the demolition can be performed using normal methods both safely and economically. Demolition methods are the responsibility of the contractor. The Department reviews demolition methods and shields in the course of pre-construction reviews and during construction.

9.3 BRIDGE DECKS

Most bridges that require rehabilitation have concrete decks. However, some bridges have steel grid decks or timber decks.

9.3.1 CONCRETE DECKS

9.3.1.1 Condition Survey

The designer has a wide range of destructive and non-destructive tests available for determining the condition of an existing concrete bridge deck. These include:

- visual inspection,
- chloride content analysis,
- freeze-thaw resistance test,
- half-cell analysis,
- delaminations survey,
- coring, and
- petrographic analysis.

The designer must request any needed tests (except visual inspection) from the Materials and Research Section. Determination of the proper deck rehabilitation strategy requires an evaluation of all test results and should not be based on the results of any one test.

9.3.1.1.1 Visual Inspection

Visual inspection of the condition of a concrete deck involves the assessment of five major factors:

- **Spalling** is caused by the separation and removal of a portion of the concrete leaving a roughly circular or oval depression in the concrete.

- **Scaling** is the gradual and continuous loss of surface mortar and aggregate.

- **Cracking** is a linear fracture of the concrete and may extend partially or completely through the concrete member.

- **Efflorescence** is a chemical reaction that results in the deposition of a powdery crystalline substance that appears on the surface of the concrete. It is caused by the evaporation or chemical change of the concrete. Efflorescence is an indication of a localized high chloride concentration and leakage.

- **Alkali silica reactivity** (ASR) is the susceptibility of certain aggregates to chemically react with the alkalies, such as sodium and potassium, in Portland cement concrete. A reactive silica material is one that reacts at high temperatures with Portland cement or lime. This type of material includes pulverized silica, natural pozzolan, and fly ash. Under certain conditions, harmful expansion, cracking, and staining of the concrete can occur.

- **Delayed ettringite formation in concrete**

Each factor should be evaluated to determine the percent of deck area in each span that exhibits these conditions. Finally, an overall percentage for each condition should be computed for the total bridge deck.

Both the top surface and the underside of the concrete deck should be visually inspected. Often the presence of a bituminous concrete wearing surface will prevent the visual inspection of the top of the deck. In these cases, the wearing surface may be partially or totally removed and the deck inspected. The visual inspection may also be based on the deck's underside condition only.

9.3.1.1.2 Chloride Content Analysis

The amount of soluble chlorides in a concrete deck is a quantitative measure of the potential of the concrete to react electrochemically with the embedded reinforcing steel.

To determine chloride content, the concrete deck is drilled, and samples of the concrete powder are collected and analyzed from various depths of the deck (1 in [25 mm], 2 in [50 mm], 5 in [125 mm], and at the depth of the top steel reinforcement if it is deeper than 5 in [125 mm]) and analyzed for chloride concentration. Sampling and testing should comply with AASHTO T260-78. The results of these tests are used in conjunction with half-cell analyses to define potential deck rehabilitation options. Rehabilitation options may apply to small areas of the deck or the entire deck.

Generally, the criteria in Figure 9-1 are used to assess the deck for chloride concentration levels.

Figure 9-1
Chloride Concentration Criteria

Chloride Concentration	Level of Chloride Contamination
0 to 1.3 lb/cu yd (0 to 0.8 kg/m^3)	Low
1.3 to 2.0 lb/cu yd (0.8 to 1.2 kg/m^3)	Moderate
2.0 lb/cu yd (1.2 kg/m^3) or greater	Advanced

Usually, chloride concentration levels in the top 2 inches [50 mm] of deck thickness will be higher than those in other parts of the deck. Chloride concentration is not, by itself, an indication of corrosion activity or unacceptable concrete strength. Remedial corrective action will be different depending on the chloride ion concentration at each level in the deck. Also, chloride concentration levels will typically be higher in the gutter area than in other areas of the deck. Consequently, different areas of the deck may require different actions. Chloride content should not be the sole determining factor for deck replacement.

9.3.1.1.3 Freeze-Thaw Test

The vulnerability of concrete to damage from freeze-thaw cycles is a measure of concrete durability. The AASHTO T-161 test method measures the resistance of concrete to rapid freezing and thawing and indicates the ability of the concrete to withstand freeze-thaw cycles. This test method covers determination of the resistance of concrete specimens to rapidly repeated cycles of freezing and thawing in the laboratory by two different procedures: rapid freezing and thawing in water, and rapid freezing in air and thawing in water. Both procedures are intended for determining the effects of variations in the properties of concrete on the resistance of the concrete to the freeze-and-thaw cycles. Neither procedure is intended to provide a quantitative measure of the length of service that may be expected from a specific type of concrete.

The first step in the procedure is to determine the initial dynamic modulus of elasticity for the concrete specimen. The specimen is then subjected to freeze-thaw cycles. Additional dynamic modulus of elasticity tests are taken periodically during the test. The test continues until its dynamic modulus of elasticity reaches 60 percent of the initial dynamic modulus or a maximum of 300 cycles. The final dynamic modulus of elasticity is used to determine the Durability Factor (expressed as a percentage) for the concrete specimen.

A Durability Factor with a value of 60 percent or lower indicates that the concrete is no longer in an acceptable condition for its intended purpose. This implies that some repairs to the deck would be required,

although not necessarily to the extent of redecking.

9.3.1.1.4 Half-Cell Analysis

A half-cell analysis measures the active corrosion and corrosion potential of embedded reinforcing steel. This is done by measuring the electrical potential between two points. Half-cell readings are usually taken on the concrete deck surface along a grid pattern at 4 foot [1.2 m] intervals. As part of the half-cell analysis test procedure, it is necessary to attach one wire of a high-impedance voltmeter to the deck reinforcing steel. The second wire is attached to a copper-sulfate half cell. This test procedure should comply with ASTM C-876.

A pachometer is used to locate the reinforcing steel for the half-cell analysis. The pachometer identifies the location and depth of the reinforcing steel using the magnetic field disruption principle. The pachometer can also be used to determine the depth of cover over the deck reinforcing steel throughout the deck. This is valuable in evaluating deck service life and rate of deck deterioration. (Decks with bituminous concrete wearing surfaces cannot be tested unless the concrete is exposed.)

The measurement of the flow of electrons is used to evaluate corrosion activity. See Figure 9-2.

Figure 9-2
Corrosion Evaluation Criteria

Half-Cell Reading (Volts)	Level of Corrosion
0.0 to -0.35 V	Insignificant or no corrosion
-0.36 to -0.50 V	Minor corrosion
Greater than -0.50 V in magnitude	Major corrosion

The results from the half-cell analysis are used in conjunction with other test results to evaluate the overall condition of the deck.

9.3.1.1.5 Delamination Survey

Delamination is the separation between "layers" of a concrete deck in the horizontal plane. Testing for delaminations can be performed by sounding with a hammer or using a chain drag. The chain drag relies on an inspector's ability to recognize hollow-sounding areas of the deck when the device is dragged along the top of the deck. Sounding with a hammer can further delineate the hollow areas.

Recent advances in technology have resulted in other methods to detect and record deck delaminations. These include:

- **Ground-penetrating radar** utilizes radar technology to investigate the bridge deck concrete. It provides a profile of subsurface layers by evaluating signal reflections caused by discontinuities. This method can be used for delamination testing on a full lane width in a single pass at up to 30 mph [50 km/h].
- **Infrared thermography** detects locations of delaminations by measuring the temperature differences between solid concrete and delaminations (air).
- **Micro-seismic** measures the intensity of an echo from a small impact as it is transmitted through the concrete and reflected by discontinuities.

Materials and Research does not have the equipment to perform ground-penetrating radar, infrared thermography or micro seismic evaluations of concrete. However, should these evaluations be needed, these services can be provided by consultants.

9.3.1.1.6 Coring

Coring bridge decks can allow the designer to evaluate the compressive strength of the sample. Cores are also visually inspected to determine the erodeability and "weathering" of the cement matrix and aggregate as a result of the coring process. AASHTO Test Procedure T-24 should be followed for all coring.

The designer should review all the compressive strength test results to identify the high- and low-strength areas and the concrete variability throughout the deck. It may not be necessary to remove the concrete in the high strength areas. Removal of higher strength concrete is more difficult, and the designer must alert the contractor to the variability of the concrete strength, especially when hydro-demolition is used.

9.3.1.1.7 Petrographic Analysis

Petrographic analysis is a microscopic examination of a concrete sample. It identifies:

- voids,
- micro-cracking in coarse aggregate, and
- cracking or debonding between the aggregate and the cement grout,

and can be used to determine:

- unit weight,
- moisture content, and
- specific gravity.

9.3.1.2 Deck Condition Evaluation

The deck condition survey data must be evaluated to determine the suitability of the deck for repair, rehabilitation, or replacement.

The FHWA has established three standard categories for concrete deck deterioration where the chloride content tested greater than 2 pounds water-soluble chloride per cubic yard concrete [1.2 kg water-soluble chloride per cubic meter concrete] for samples taken above the top steel, and 1 pound chloride per cubic yard concrete [0.6 kg chloride per cubic meter concrete] for samples taken between the top and bottom mats of steel. These categories are defined below and summarized in Figure 9-3.

Category 1: Extensive Active Corrosion. Minimum of 5% of the deck visibly spalled or minimum of 40% of the deck area having deteriorated or contaminated concrete, or active rebar corrosion, as indicated by a summation of nonduplicating areas consisting of spalls, delaminations, electrical potentials with negative readings in excess of -0.35 V. Category 1 decks are normally replaced.

Category 2: Moderate Active Corrosion. Zero to 5% of the deck visibly spalled, or 5 to 40% of the deck area having deteriorated and/or contaminated concrete, and/or active rebar corrosion, as indicated by a summation of nonduplicating areas consisting of spalls, delaminations, electrical potentials with negative readings in excess of -0.35 V. These decks should be rehabilitated.

Category 3: Light or No Active Corrosion. No visible spalls, or 0 to 5% of the deck area having deteriorated and/or contaminated concrete, and/or active rebar corrosion, as indicated by a summation of nonduplicating areas consisting of spalls, delaminations, electrical potentials with negative readings in excess of -0.35 V. These decks should be rehabilitated.

Figure 9-3
Bridge Deck Evaluation Criteria

<table>
<tr><th rowspan="3">Category Classifications</th><th colspan="4">Condition Indicators (Percent of Deck Area)</th></tr>
<tr><th colspan="2">Deterioration</th><th colspan="2">Contamination</th></tr>
<tr><th>Spalls</th><th>Delaminations</th><th>Electrical Potential</th><th>Chloride Content</th></tr>
<tr><td>Category 3 Light Deterioration</td><td>None</td><td>< 5</td><td>5% < -0.35 V</td><td rowspan="4">> 2.0 lb/cu yd (1.2 kg/m^3) above top steel and > 1.0 lb/cu yd (0.6 kg/m^3) between steel mats</td></tr>
<tr><td>Category 2 Moderate Deterioration</td><td>< 5</td><td>5-40%</td><td>5-40% > -0.35 V</td></tr>
<tr><td rowspan="2">Category 1 Extensive Deterioration</td><td colspan="3">The sum of all deteriorated and/or contaminated deck concrete is less than 40%</td></tr>
<tr><td>> 5</td><td colspan="2">The sum of all deteriorated and/or contaminated deck concrete is greater than 40%</td></tr>
</table>

Decks with low chloride contamination should be waterproofed using silene sealer as a minimum treatment. Decks with moderate chloride contamination may be overlaid to extend their service life. Decks with advanced chloride contamination should be considered for replacement only if the condition is poor.

The above categories are guidelines. Traffic impacts, costs of temporary overlay alternates, and service life expectancy (rate of deck deterioration) should also be evaluated.

9.3.1.3 Concrete Removal

Three methods are used for removal of concrete for rehabilitation of decks:

- jackhammer,
- hydrodemolition, and
- milling.

The edges of areas to be patched must be saw cut 1 inch [25 mm] deep into squares or rectangles. Saw cuts must be stopped at the corners to prevent overcutting. The corners must be hand chipped. The rest of the removal is performed with jackhammers, hydrodemolition, or hand chipping.

Jackhammer. The size of the jackhammer must be appropriate for the amount of removal to prevent unnecessary damage to the deck.

Hydrodemolition. Hydrodemolition is the use of high-pressure water jetting on a large scale to remove deteriorated concrete from bridge decks. The extent of concrete removal is primarily determined by concrete strength, water pressure, type of nozzle, and equipment speed. The designer must consider the strength of the concrete and the capability of the equipment before specifying this method of removal. Sufficient deck condition data must be obtained to evaluate the removal needs. The designer must specify the minimum depth of concrete removal in areas with high concrete strengths and estimate the quantity of removal in all areas.

Excessive pressure or inappropriate machine speeds will result in the removal of an excessive depth of concrete. To prevent this, the contractor is required to perform a demonstration in a test section. The designer must determine the size and number of test sections. Multiple machine settings may be required to match the depth of removal with the levels of deterioration and concrete strengths.

The depths and limits of removal and the number of test sections must be shown on the plans.

Milling. Milling is used to prepare decks for complete overlays. The weight of the milling machine must be considered when milling bridges constructed with low or highly variable deck concrete strengths. The depth of rebar cover should be determined using a pachometer in order to avoid damage to the rebar by the milling machine.

9.3.1.4 Concrete Deck Rehabilitation

Concrete deck rehabilitation involves patching, overlay or lithium treatment for ASR. An economic analysis considering partial- and full-depth patching, partial-span deck replacement, overlay and a combination of these actions should be performed before a final action is defined.

9.3.1.4.1 Patching

Bridge decks in Category 2 and 3 (moderate active corrosion and light or no active corrosion), Section 9.3.1.2, are candidates for patching and overlaying.

Frequently, a bridge deck does not require complete replacement. If the deck condition survey data indicates that the majority of the deck is in good condition with only the top surface requiring replacement (due to spalling or high chloride concentration) and with other areas of the deck requiring only partial or limited full-depth patching, the deck can be rehabilitated by patching and overlaying. In this case, the top surface of the deck, above the top mat of reinforcing steel, is removed without debonding, damaging or dislodging the reinforcing steel. Removal can be accomplished by scarifying, hand chipping, or hydrodemolition. All deteriorated and high chloride contaminated concrete must be removed.

After the surface concrete is removed, all remaining areas of highly deteriorated concrete are removed (hand chipped) and replaced. Patching material must be compatible with the selected overlay. The surface must be patched first so the overlay will be of uniform thickness. Finally, an overlay is applied to the full deck surface and may increase deck thickness. A structural analysis is necessary before an overlay is installed because of the increased dead load.

Any of the overlays listed in Section 9.3.1.4.2, except bituminous overlays, may be used to repair decks after the patching is completed.

9.3.1.4.1.1 Repair by Patching

Bridge decks in Category 3 (light or no active corrosion), Section 9.3.1.2, are candidates for repair. The method of deck repair depends on the depth of the deteriorated area. A shallow repair is used where the depth of concrete deterioration is less than 2 inches [50 mm] and reinforcing is not exposed. Deep repairs involve removal of concrete below the reinforcing steel, cleaning of the steel, supplementing deteriorated steel, and placing and curing the repair material. Generally, deep, permanent concrete repair material, such as Class D concrete, is used. Insofar as it is practical, the concrete repair material should have the same strength, permeability, and expansion/contraction characteristics as the existing concrete. Figure 9-4 illustrates a full-depth deck repair.

Figure 9-4
Full Depth Deck Repair

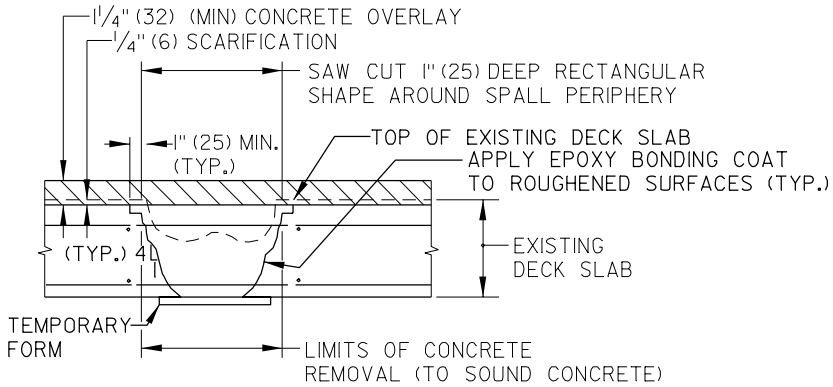

9.3.1.4.2 Overlay

Bridge decks in Category 2 and 3 (moderate active corrosion and light or no active corrosion), Section 9.3.1.2, are candidates for overlaying.

Five types of overlays are used for deck rehabilitation:

- latex-modified concrete,
- silica fume concrete,
- other thin-bonded concrete overlays,
- Class D concrete, and
- bituminous concrete.

Designers should compare all methods and materials to select the optimum one for the particular application. The minimum total cover over the top mat of reinforcing steel is 2.5 inches [65 mm] for any type of cementitious overlay. Surface preparation is necessary to ensure the required bond between the overlay and the deck.

A structural analysis is needed before applying any overlay that increases the dead load.

Latex-modified concrete (LMC) consists of cement mortar or concrete mixed with styrene-butadiene latex. LMC may be used for thin patches, which may be made monolithically with the overlay. The minimum thickness of an LMC overlay is 1.25 inches [32 mm].

Silica fume concrete consists primarily of noncrystalline pozzolanic silica. It has many of the same characteristics as latex-modified concrete but is more economical and has a longer curing time.

Other thin-bonded concrete overlays include polymer concrete and other proprietary products.

The maximum thickness for latex-modified concrete, silica fume concrete, and other thin-bonded concrete overlays is 2 inches [50 mm], but that may be increased if reinforcing is used to minimize cracking. Latex-modified concrete and silica fume concrete are normally bid as alternates in order to get the lowest possible overlay cost.

Class D concrete overlays are made with the same class of Portland cement concrete used for other superstructure elements. The minimum thickness of Class D concrete overlays is 3 inches [75 mm]. Where thicker overlays are needed, Class D concrete should be used.

Bituminous concrete overlays are not used by the Department for permanent repairs. They may be used for temporary repairs and to improve rideability. Bituminous overlays allow chlorides to penetrate to the concrete surface, hold moisture, and prevent washing the chlorides from the surface of the concrete. A membrane should be used if a bituminous concrete overlay is considered to be a permanent repair.

9.3.1.4.3 Waterproofing

Bridge decks and sidewalks may be treated with a water-repellent solution consisting of isobutyl-trimethoxy silane-based material. Because silane cannot be applied over curing compound, specifications must provide for water curing where this waterproofing is to be used. The need for waterproofing is determined on a case-by-case basis.

9.3.1.5 Concrete Deck Replacement

Bridge decks in Category 1 (extensive active corrosion; see Section 9.3.1.2), are candidates for replacement. Where concrete deterioration extends below the top mat of reinforcing steel over a large area of the deck, total deck replacement is necessary. Because the remaining superstructure and substructure must remain in service as long as the new deck, these elements must be in good condition. A final decision to proceed with a deck replacement depends on the condition and evaluation of remaining portions of the superstructure and substructure.

The most common deck replacement options include:

- cast-in-place concrete,
- precast concrete, and
- orthotropic deck.

Refer to Section 5.2 for design details for cast-in-place and precast decks.

9.3.1.5.1 Cast-in-Place Concrete

Cast-in-place concrete is the most common deck replacement option. Both normal weight and lightweight concrete have been used successfully. A lightweight concrete deck will decrease the dead load, thereby increasing the capacity of a structurally deficient bridge and allowing heavier live loads. The use of lightweight concrete must be based on the results of a structural analysis.

9.3.1.5.2 Precast Concrete

Decks may be replaced with precast deck slabs or deck panels. Precast deck slabs are cast full thickness in segments for placement on the beams. A concrete overlay

must be placed to improve the ride. Precast deck panels are cast partial thickness and are placed to act as stay-in-place forms. The remainder of the deck is cast in place to form a full-thickness composite deck. Either precast slabs or deck panels may be conventionally reinforced or prestressed. Precast slabs or panels provide the following advantages:

- excellent quality control,
- flexibility of fabrication,
- fast construction, and
- reduced traffic delays and inconvenience to the traveling public.

They have the following disadvantages:

- potential for cracking at slab and panel joints, and
- design details more critical to fabrication and construction.

These methods require the designer to consider the following:

- composite action requirements,
- details for attachment of the slabs or panels to the superstructure,
- horizontal shear connection between the deck and superstructure,
- joints between slabs or panels,
- riding surface, and
- type of overlay.

Refer to Section 5.2.2 for design of precast slabs and deck panels.

9.3.1.5.3 Orthotropic Decks

An orthotropic deck can replace both the deck and the support stringers of a rehabilitated structure. The use of an orthotropic deck must be approved by the Bridge Design Engineer. An orthotropic deck consists of a stiffened steel deck supported by trusses or frames. The deck acts as the top flange. An orthotropic deck permits increasing the spacing of primary load-carrying members to a range of 15 to 40 feet [4.6 to 12.2 m]. The designer should evaluate the impact on profiles and clearances when considering an orthotropic deck on existing support elements. Refer to Section 9.8 in the *AASHTO Specifications* for design of orthotropic decks.

Wearing surfaces must be added to orthotropic decks to provide skid resistance and protect the steel. Epoxy asphalt wearing surfaces have performed better than bituminous concrete in recent applications. Deck plate flexibility has been a cause of wearing surface bonding failures.

Advantages of this system include improved quality control through shop fabrication, fast construction, and minimal traffic impact.

9.3.2 STEEL GRID DECKS

Steel grid decks are used only to replace existing steel grids, usually on movable bridges. Steel grids may be filled full depth or half depth with either normal weight or lightweight concrete. Overfilling the grid provides an integral wearing surface. A separate wearing surface may also be placed.

9.3.2.1 Steel Grid Deck Evaluation

There are five considerations in the evaluation of steel grid decks:

- failure of the connections of the grid to the superstructure,
- reduced skid resistance,
- fatigue evaluation,
- corrosion, and
- delamination.

Where these conditions become severe, replacement of the grid should be considered.

Steel grid deck rehabilitation can be accomplished by replacing all or portions of the grid.

9.3.2.1.1 Connection Failure

The connections of the various grid components are subjected to forces caused by the interaction between the grid and its supporting elements. These forces stem from vehicle loads, including those forces introduced through braking or accelerating. These connections will fail over time because of fatigue and other time-dependent effects. Failed connections can be identified through visual inspection. Refer to the bridge inspection file.

9.3.2.1.2 Reduced Skid Resistance

Both open grids and concrete-filled grids without surfacing are subject to decreased skid resistance over time. Unsurfaced filled grids can develop cupping or wear of the concrete between the grid bars, which exposes the grid to direct wheel loads. The surface of the filled grid then becomes similar to that of an open grid, and skid resistance quality declines. In wet weather, this is dangerous as water is held in the cups. In freezing weather the hazard increases due to ice formation. The riding surface of the grid elements, when new, presents some resistance to skidding, but wear causes a reduction in skid resistance.

9.3.2.1.3 Fatigue Evaluation

Fatigue is defined as the damage that may result after a sufficient number of fluctuations of stress have occurred. When steel grid decks are subject to many cycles of loading and unloading (from 20,000 to over 5,000,000), the metal may fatigue and develop cracks in regions of high and localized stress. Left unaddressed, fatigue cracking can ultimately lead to the complete failure of steel members.

To evaluate the severity of the fatigue, the engineer must consider:

- the number of load applications,
- the magnitude of the stress range (Fs_{max} to Fs_{min}), and
- the stress concentrations associated with particular details.

Fatigue and cracking do not develop in compression members. Variations of stress that occur within tension members, however, will always be a major consideration in the evaluation of existing steel grid decks.

9.3.2.1.4 Corrosion

The grid bars (and the supporting purlins and stringers in the case of open grids) are exposed to road chemicals, including deicing salts, which cause corrosion to develop in the steel grid deck system.

9.3.2.1.5 Delamination of Surfacing

Filled and surfaced grids can also be subject to delamination between the riding surface and the grid.

9.3.2.2 Steel Grid Deck Replacement

Refer to Section 9.8.2, in the *AASHTO Specifications* for design of steel grid decks.

Steel grid decks should always be galvanized.

Replacement grid decks should be shifted along the primary support member to

preclude welding the grid at the same locations as the previous welds. Attachment of the grid to the superstructure is a critical detail and must be closely evaluated.

9.3.3 TIMBER DECKS

9.3.3.1 Timber Deck Survey and Evaluation

Wood decks nearing the end of their useful lives exhibit a number of signs indicating that there are problems:

- excessive deflection under load,
- loose connections as a result of shrinkage,
- deterioration, such as checking, cracking, or crushing, and
- wear of the timber deck evidenced by protruding nails.

When the four survey conditions investigated above become severe, replacement of the timber members is required.

9.3.3.2 Timber Deck Replacement

Total timber deck replacement is rarely needed. Generally individual planks are replaced in kind as required by maintenance.

When support beams or nailers become deteriorated or will no longer hold the fasteners, the beams/nailers/sleepers and the complete deck must be replaced. Only timber planks pressure treated in accordance with the specifications with a preservative. Consideration should be given to using longitudinal deck panels only if the substructure is in good condition. Refer to Chapter Eight, Timber Design, and Section 9.9, in the *AASHTO Specifications* for design of timber decks.

A bituminous concrete overlay is generally placed over timber decks for rideability and to meet skid resistance criteria.

9.3.4 DECK PROTECTIVE SYSTEMS

The Department specifies Class D concrete with low water-cement ratios and integral wearing surface over the top mat of reinforcement to ensure long-lasting decks. Additional deck protection includes:

- waterproofing,
- cathodic protection,
- epoxy-coated reinforcing steel, and
- overlays.

9.3.4.1 Waterproofing

Bridge decks and sidewalks may be treated with a water-repellant solution consisting of an isobutyl-trimethoxy silane-based material. Because silane cannot be applied over curing compound, specifications must provide for water curing where this type of waterproofing is to be used.

9.3.4.2 Cathodic Protection

Reinforcing steel in chloride-saturated concrete creates an electrolyte when exposed to water. The difference in electric potential between dissimilar materials causes an electrochemical reaction resulting in electric current flowing from one electrode (anode) to the other (cathode). This process can cause rust to form which rapidly reduces the cross section of the reinforcing steel. The most commonly used method to reverse this process is cathodic protection.

Cathodic protection is suitable for chloride-contaminated decks with sound

concrete. Cathodic protection accelerates alkali silica reactivity (ASR). The deck should be checked for ASR before considering the use of cathodic protection. Cathodic protection can only be used with the approval of the Bridge Design Engineer.

9.3.4.3 Epoxy-Coated Reinforcing Steel

The Department routinely uses epoxy-coated reinforcing steel in all new and replacement decks, slabs and parapets. Epoxy-coated bars should not be used to supplement uncoated reinforcing steel.

9.3.4.4 Overlays

Refer to Section 9.3.1.4.1 and Section 9.3.1.4.2.

9.3.5 SAFETY CONSIDERATIONS

It is desirable to update as many safety items as possible according to current Department and AASHTO standards when a deck rehabilitation or replacement project is constructed. These items include:

- barrier rail,
- approach guardrails and attachments to the structure,
- curbs and/or sidewalks, and
- approach guardrail end treatments.

Structures are widened to match approach roadway geometry wherever practical. Consideration must be given to providing minimum bridge width, appropriate shoulder widths, and betterment of the functionality of the structure to remove the bridge from the functionally obsolete classification.

A functionally obsolete bridge is one in which the deck geometry, clearance, or approach roadway alignment no longer meets the usual criteria for the system of which it is an integral part. Numerically in the FHWA NBI Coding Guide, a functionally obsolete bridge shall have an appraisal rating of 3 or less for:

- deck geometry (item 68),
- underclearance (item 69), or
- approach roadway alignment (item 72),

or an appraisal rating of 3 for:

- structural condition - deck (item 58), or
- waterway adequacy (item 71).

Refer to Section 5.2.7 in this manual; Chapter Ten, Miscellaneous Design, in the DelDOT *Road Design Manual*; and Section 2, General Design and Location Features, in the *AASHTO Specifications*.

9.4 RAILINGS

Bridge railings may be upgraded to current standards as part of a bridge rehabilitation project, wherever economically feasible and within the scope of the project. Standard types of rails are shown in Section 5.2.7.1. Types of railings include:

- concrete - F-shape,
- concrete - vertical wall with handrail,
- concrete - stone faced,
- steel or aluminum, and
- timber.

Bridges with sidewalks or safety walks may be retrofitted with Bridge Rail Retrofit, Type 1, 2, or 3.

Type 1—Thrie beam rail with timber blocks anchored through the existing parapet. Type 1 should be used where the sidewalk is 18 inches [460 mm] or less in width.

Type 2—Thrie beam rail with steel posts anchored into the sidewalk. Type 2 should be used where the sidewalk is wider than 18 inches [460 mm].

Type 3—Concrete block anchored into the sidewalk. Designer must consider increased dead load. If weight is a problem, use Type 1 or 2.

If the existing bridge deck has sufficient strength, the designer may consider removing the existing railing and replacing it with a new concrete safety shape.

Timber railings are used mainly on timber bridges.

Approach railings are fastened to the bridge barriers and end with an approved end treatment. Impact attenuators are not used at approach railing terminations. Refer to DelDOT *Standard Construction Details* for details of barriers and railings, as well as for retrofit details. Also refer to Chapter Ten in the *Road Design Manual* and the *AASHTO Roadside Design Guide*.

9.5 JOINT REPAIR/REPLACEMENT

The types of joint devices common to Delaware bridges are:

- compression seal,
- strip seals,
- sliding plates,
- finger joints with troughs,
- open joints,
- hot-poured sealer joints,
- closed-cell elastomeric sealed joints,
- modular systems,
- elastomeric concrete joints, and
- silicone seals.

The most common shortcoming of joints is leakage. Leakage of roadway runoff containing chemicals, salts and pollutants causes rapid premature deterioration of decks, beam ends, bearings, and substructures.

The designer should always seal the deck joint over expansion bearings and control roadway runoff water. The Department installs sealed replacement joints during any deck rehabilitation, overlay, or replacement.

Usually, strip seal joints are used for rehabilitation projects. Strip seal joints are used for both transverse and longitudinal joints. Transverse strip seals are used for span movements up to 4 inches [100 mm]. Longitudinal strip seals are limited to 2 inches [50 mm] because of the hazard to motorcyclists.

Some existing bridges have open joints. Where these joints cannot be sealed or replaced during rehabilitation, the trough should be replaced, or if none exists, one should be installed to control runoff.

On long-span or curved bridges, finger joints or modular joints are used to accommodate movement. Finger joints are preferred. Troughs are required to control leakage of finger joints (see Figure 5-10). The other alternative, a modular joint, consists of three elements: the seals, separator beams, and supports. Proper function of the modular joint relies on equal seal deformations. The use of modular joints requires approval of the Bridge Design Engineer.

The designer is alerted to exercise care when computing joint openings and

designing skewed joints. Refer to Figure 5-9 for sample calculations for strip seal joints.

9.6 APPROACH SLABS

The primary failures of approach slabs include undermining, settlement, and cracking.

Undermining. Undermining of bridge approach slabs is the result of the erosive action of water, scouring and carrying away material from beneath the slab. Damage to the slab caused by slab undermining can be repaired by pressure grouting. These methods fill the voids beneath the slab. The cause of the undermining is usually leaking joints. The joints must be resealed to prevent recurrence. In extreme cases, approach slab undermining can result in cracking and displacement of the slab, requiring replacement.

Settlement. Settlement may be repaired by pumping material to fill the voids under the slab or to raise the slab. These materials include:

- cement grout,
- flowable fill, and
- expansive polyurethane.

Cement grout may be applied under sufficient pressure to raise the slab. Flowable fill will fill the voids, provide support for the slab, and reduce lateral pressure on the substructure. Flowable fill must be placed in lifts and allowed to cure between lifts to prevent excessive load on the abutment. Expansive polyurethane is applied in liquid form. It expands about 30 times in volume as it solidifies. It seals voids in addition to correcting the slab profile. The application technique is proprietary and should be used only by experienced contractors. An overlay may be necessary to restore the ride with any of the above methods.

Cracking. Small cracks can be repaired by the application of low-viscosity crack sealer. If the cracks are too wide to permit sealing, partial or complete removal and replacement of the slab may be necessary.

If the approach slab has been previously overlaid with bituminous concrete, replacement with Portland cement concrete should be considered so the bituminous overlay is not needed. This should be done in conjunction with deck overlay or replacement.

9.7 BEAMS AND GIRDERS

9.7.1 CONVENTIONALLY REINFORCED CONCRETE BEAMS

In addition to visual inspection, the primary tests used to evaluate beams are sounding and coring. The tests and evaluation options for conventionally reinforced concrete beams and concrete-encased steel beams are the same as those for concrete decks. Refer to Section 9.3.1.

In addition to the five factors (i.e. spalling, scaling, cracking, efflorescence, and ASR) the designer must evaluate each beam or girder for collision and fire damage.

9.7.1.1 Concrete Beam Repairs

There are numerous repair methodologies available for repairing concrete beams. These include various materials, techniques, and application methods. The designer must evaluate the structural effects of the repair—particularly the effects of concrete removal—on the capacity of the member

being repaired. A structural analysis may be necessary. A pigmented waterproofing sealer should be applied to the entire beam to create a uniform appearance.

9.7.1.2 Repair Materials

Potential repair materials include:

- cement-based mortar or concrete,
- nonshrink quick-setting mortar,
- epoxy mortar,
- resin-based polymer concrete,
- cement-based polymer concrete, and
- pneumatically applied mortar.

Factors to be considered in selecting repair materials include:

- size,
- location,
- general function of the member, and
- portions to be repaired.

Material selection is influenced by:

- compatibility of the material with the existing concrete,
- environmental considerations, including aesthetics,
- cost effectiveness,
- expected service life,
- availability of the material, and
- familiarity of contractors with the material.

Properties of the repair material should conform as closely as possible with the existing concrete, particularly with respect to the coefficient of expansion and modulus of elasticity. This physical compatibility is necessary for a good bond to the concrete substrate. Strength should be at least as high but not significantly higher than that of the existing concrete.

Repair material should have low shrinkage, low permeability, and low water-cement ratio to prevent moisture and chloride penetration. It should not react chemically with the embedded steel.

Repair material should adhere to the concrete surface, by applying either a rich cement mix or an epoxy bonding compound to the prepared concrete surface before placing the new material.

The portions of beams subject to water damage should be waterproofed.

9.7.1.3 Surface Preparation

Obtaining bond between the repair material and the existing concrete is extremely important in any concrete repair. The existing concrete must be clean and sound. The edges of the repair area must be saw-cut 1 inch [25 mm] deep into squares or rectangles. Saw cuts should be stopped at the corners to prevent overcutting. The corners must be hand chipped. Removal of concrete within the saw-cut area may be performed by jack hammering, hydrodemolition, or hand chipping. After removal, the remaining concrete surface should be thoroughly cleaned of loose concrete using high-pressure air or water. The reinforcing steel is sand blasted until completely free from corrosion. If the reinforcing bar serves only as temperature or distribution reinforcement, up to 30 percent section loss can be tolerated; only 10 percent section loss is permissible for primary reinforcement, and then only if analysis supports this reduction.

Steel corroded beyond acceptable levels normally requires supplemental reinforcement. Enough concrete should be removed to provide adequate lapping of bars beyond the deteriorated location.

Mechanical splices are preferred over lap splicing.

9.7.1.4 Surface Patching

All concrete repair patching requires the use of an approved bonding agent that bonds new and existing concrete. Generally, the Department uses epoxy- or water-based bonding agents.

Surface or shallow patching is usually limited to placement of repair material between the surface and the first mat of reinforcing steel. If the repair is deeper, refer to Section 9.7.1.5. Both shallow and deep spall repairs are illustrated in Figure 9-5.

Cement-based mortar or concrete, nonshrink quick-setting mortar, and epoxy mortar are suitable for surface patching.

Cement-based mortar or concrete is widely available, low cost, and compatible with existing concrete. Cement mortars are used for small thin repairs, and concrete is used for larger repairs (greater than 2 ft^3 [0.056 m^3] and greater than 3 inches [75 mm] deep). Trowel-grade cement-based mortars can be applied to vertical and overhead surfaces, while concrete must be formed.

Nonshrink quick-setting mortar is made with special admixtures or high early strength cement. The nonshrink characteristic is achieved by the use of expansive cements. They are suitable for the same repairs as cement-based mortar or concrete. To reduce costs, they can be mixed with up to 50 percent of their weight of pea gravel with no significant reduction in performance.

Epoxy mortar is a high-cost material and is used only where other materials are unsuitable. It is composed of three components: epoxy resin, a curing agent, and aggregate. It has high compressive and shear strengths, and excellent bonding properties. Epoxy mortars are very quick-setting and are not suitable for large-volume repairs. They are appropriate for patches up to 0.5 inch [13 mm] deep. Epoxy mortars are also effective for grouting anchor bolts and repairing bearing pads.

9.7.1.5 Deep Repairs

Deteriorated concrete that is too deep for surface patching and extends deeper than the first mat of reinforcing steel requires deep repairs. Preparation is the same as previously stated, except that the first mat of reinforcing steel is completely exposed to a minimum of 1 inch [25 mm] behind the reinforcement. These bars are thoroughly cleaned, in accordance with Section 9.7.1.3. (See Figure 9-5.) A suitable bonding agent is applied for any of the following repair materials.

Cement-based cast-in-place concrete is used for the repair of deteriorated areas 3 inches [75 mm] deep or more.

Resin-based polymer concrete is a methyl methacrylate monomer mixed with aggregates. They gain very high strengths in a short period of time, which may be unsuitable for some locations. In selecting this material, the designer should consider the high vapor pressure, low flash point, and intolerable odor. The volume can be increased by the inclusion of dried aggregate. It is suitable for locations where it can be placed quickly after mixing before it sets up.

Figure 9-5
Concrete Beam Patching Details

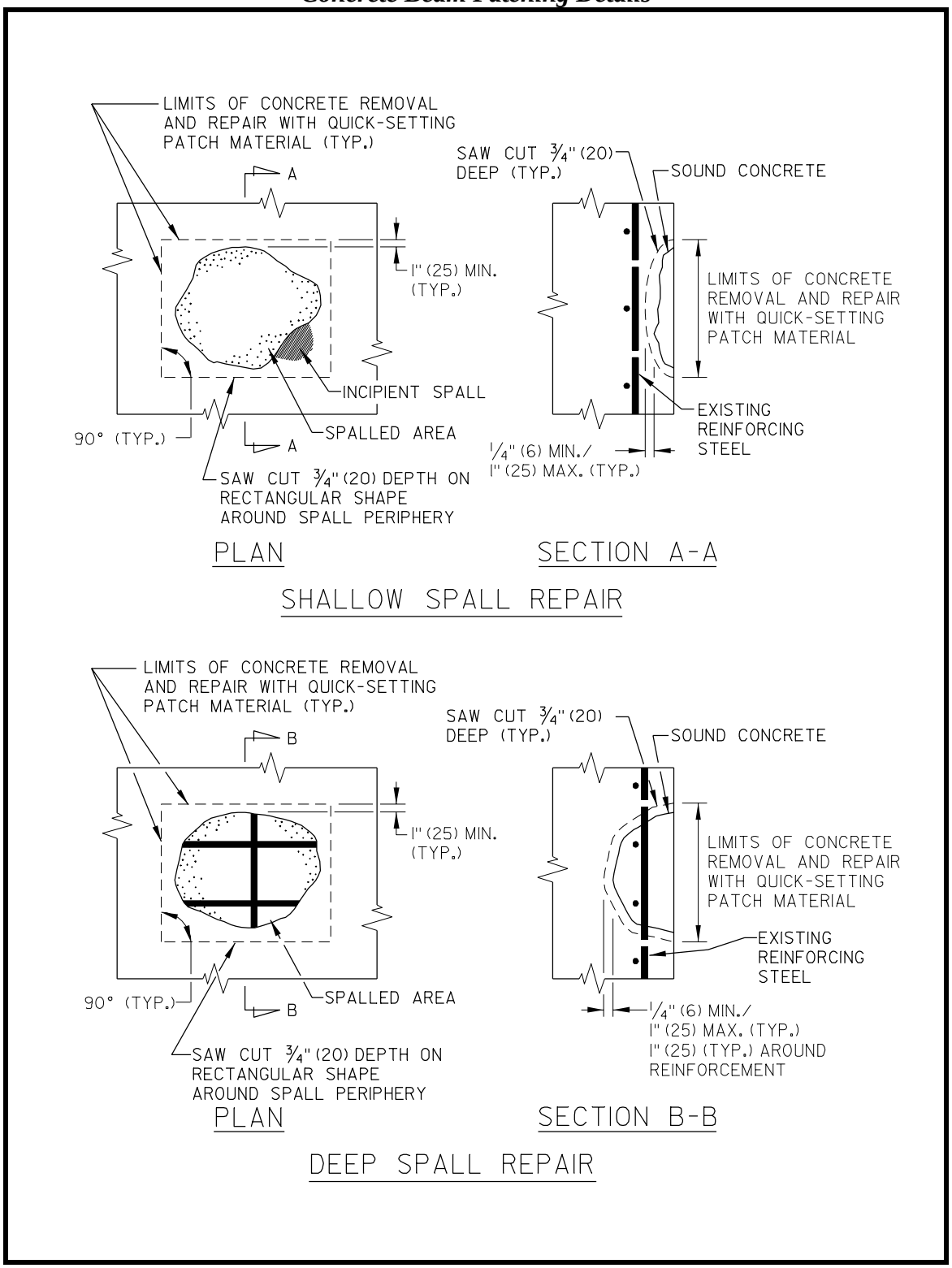

Cement-based polymer concrete is a mixture of polymers with cement-based mortar. The mixture enhances the mortar's physical properties in the presence of water. (One of the best-known cement-based polymers is latex-modified concrete.) It should be avoided for large-volume repairs because of the high cost.

9.7.1.6 Pneumatically Placed Concrete

Pneumatically placed concrete, such as shotcrete, or gunnite, is a mixture of sand, cement, water and admixtures, if appropriate. The mixture is sprayed at high velocity onto concrete surfaces. A bonding agent is normally applied prior to application of the mortar. Pneumatically placed concrete, up to 3 inches [75 mm] in depth, may be used for repairs to concrete structures or members. This material is also suitable for large-volume, cosmetic repairs. Pneumatically applied mortar works well for overhead applications.

9.7.1.7 Pressure Injection

Cracks in concrete are caused by:

- shrinkage,
- excessive thermal stresses where relief joints are not provided,
- improper concrete placement or curing,
- uneven foundation settlements,
- overstressing caused by internal or external forces,
- inadequate reinforcement,
- improper detailing, and
- corrosion of reinforcement.

Some cracks are active, and others are not. It is important that the cause of the crack be identified before attempting to seal or repair it.

Pressure injection of cracks is an acceptable repair method. Cracks up to a width of 0.25 in [6 mm] can be successfully filled with epoxy grouts of varying viscosity. Cracks wider than 0.25 in [6 mm] can be filled with either a cement grout or an epoxy grout that includes filler materials. Cracks less than 0.125 in [3 mm] in width can be surface sealed for corrosion protection or pressure injected with an epoxy resin when strengthening is necessary.

Details on methods, techniques, and the mechanics of crack injection can be found in *Bridge Inspection and Rehabilitation: A Practical Guide*, by Parsons Brinckerhoff.

9.7.2 PRESTRESSED CONCRETE BEAMS

By definition, prestressed concrete members are compressed by the induced tension in the prestressing strands. Significant concrete deterioration or corrosion of strands can lead to a loss of prestress force. Cracks and other deficiencies in prestressed concrete must be carefully investigated through a thorough analysis. Additionally, impact damage from overheight vehicles can also introduce severe damage that necessitates repair.

9.7.2.1 Damage Evaluation

Generally, a visual inspection of prestressed concrete beams is necessary to evaluate beams. Obvious spalls, impact damage, cracks, and rust staining should be noted. Certain types of defects are not as readily obvious.

- **Corrosion of prestressing strands**. Most corrosion of prestressed strands can

be attributed to chloride attack. Leaking decks and joints and cracked girders expose prestressing strands to moisture. Often, the moisture contains chloride. Tests should be conducted to determine chloride contamination; electrical potential (half-cell tests) for steel corrosion; concrete cover; and concrete strength, composition, quality, and permeability. Where strands are unbonded, the chances of corrosion increase dramatically. Water leaking through the anchorage travels along the strand, causing it to corrode.

- **Cracking between adjacent precast box beams**. Where precast, prestressed concrete box beams are adjacent to each other, longitudinal cracks in the deck or wearing surface normally develop along the joints between the box beams. Cracks develop for the following reasons:
    - Transverse prestressing force induced by the tie rods typically fails to produce a uniform and integral behavior of all units.
    - Grouted shear keys between adjacent boxes may not have sufficient strength.
    - The concrete's shear capacity is inadequate without an overlay.
    - Variation in concrete creep may produce a difference in the camber growth in the box beams, generating forces that contribute to longitudinal cracking.
    - Shearing forces, created by the tendency of each box beam to deflect independently under truck loads, may cause cracking of shear keys.
    - Corrosion in the tie rods may produce a loss of lateral force.
- **Cracking of precast box beams**. If structural cracking develops in the bottom flange of precast box beams, the cracks may be sealed. This repair is unlikely to restore the structural capacity to its original value. An analysis should be made to evaluate the capacity of the superstructure in the cracked condition. The results of this analysis will determine the need to replace the superstructure.

  Water that collects inside a box beam increases the dead load and causes deterioration. Drain holes must be provided in precast box beams to allow any water that enters through cracks to escape. During the visual inspection, a check should be made to determine whether the drain holes are open. Provisions to unplug drain holes may be needed.
- **Damage from collision**. In most cases, vehicular collision is the cause of concrete loss and strand exposure over traffic lanes. Exposure of strands poses no immediate danger to the integrity of the beam unless there is a substantial loss of concrete. The concrete spall can be repaired after the strands are cleaned.

  A nick in one or several wires of seven-wire strand may not be serious. Severed or sharply bent wires in a single strand may not reduce beam capacity substantially. An analysis, which includes a fatigue evaluation, should be performed to determine whether strength loss is significant.

  Severance of more than two strands is considered a cause for concern and requires strand repairs, splices, or beam strengthening by post-tensioning. Traffic should be detoured from the area immediately over the

beam, and the beam should be supported temporarily.

9.7.2.2 Repairs

There are several repair methods available, including the following:

- **Post-tensioning**. Refer to Figure 9-6. One method is the placement of symmetrical jacking corbels on either side of the damaged area, in the sound sections of the beam, and anchoring them to the bottom flange. Post-tensioning tendons are passed through the corbels and anchored against the bearing plates. After preloading the beam, the concrete is repaired and allowed to harden; when the beam is strong enough, the preloading is removed and the exterior post-tensioning of the beam is applied by turning the nuts at the ends of the threaded bars, simultaneously at both corbels. Threaded bars are normally placed in plastic conduits and pressure grouted. Intermediate supports should be provided for long bars.

  Jacking corbels should be located in an area where holes can be drilled through the web without interfering with either straight or draped strands. Shear transfer is obtained by roughening the area of contact between the corbels and the beam, and by installing expansion bolts at frequent spacings.

- **Internal splicing**. An efficient method of repairing a 0.5 inch [13 mm] strand is shown in Figure 9-7. The splice is torqued to induce a tension in the strand equal to that of adjacent undamaged strands.

- **Metal sleeve splice**. This is an external procedure for splicing a damaged beam. It does not normally restore prestress, although partial or full prestress may be restored by preloading. Where there are many severed strands, or where a large quantity of concrete is missing, this splice is often used to restore the beam to its function.

  Construction normally includes applying the necessary preloading, replacing the concrete, removing the preloading after the concrete has gained sufficient strength, and installing the metal sleeve. See Figure 9-8.

- **Composite Strips**. This is a reinforcing procedure for concrete surfaces. The material for reinforcing strips is either carbon fiber or E-glass fiber. The strips are attached to the sound concrete surface using polyester resin or an approved adhesive. The strips are used to restore or increase the load-carrying capacity of concrete members.

9.7.2.3 Preloading

Preloading is the application of a temporary vertical load during the in-place repair of a damaged prestressed member. Preloading reduces the stress in the concrete or strands in the damaged area during repairs. Preloading can be applied by either a loaded vehicle or vertical jacking depending on what is to be repaired. Preloading force requirements must be specified in the contract documents.

Figure 9-6
Post-Tensioning Method

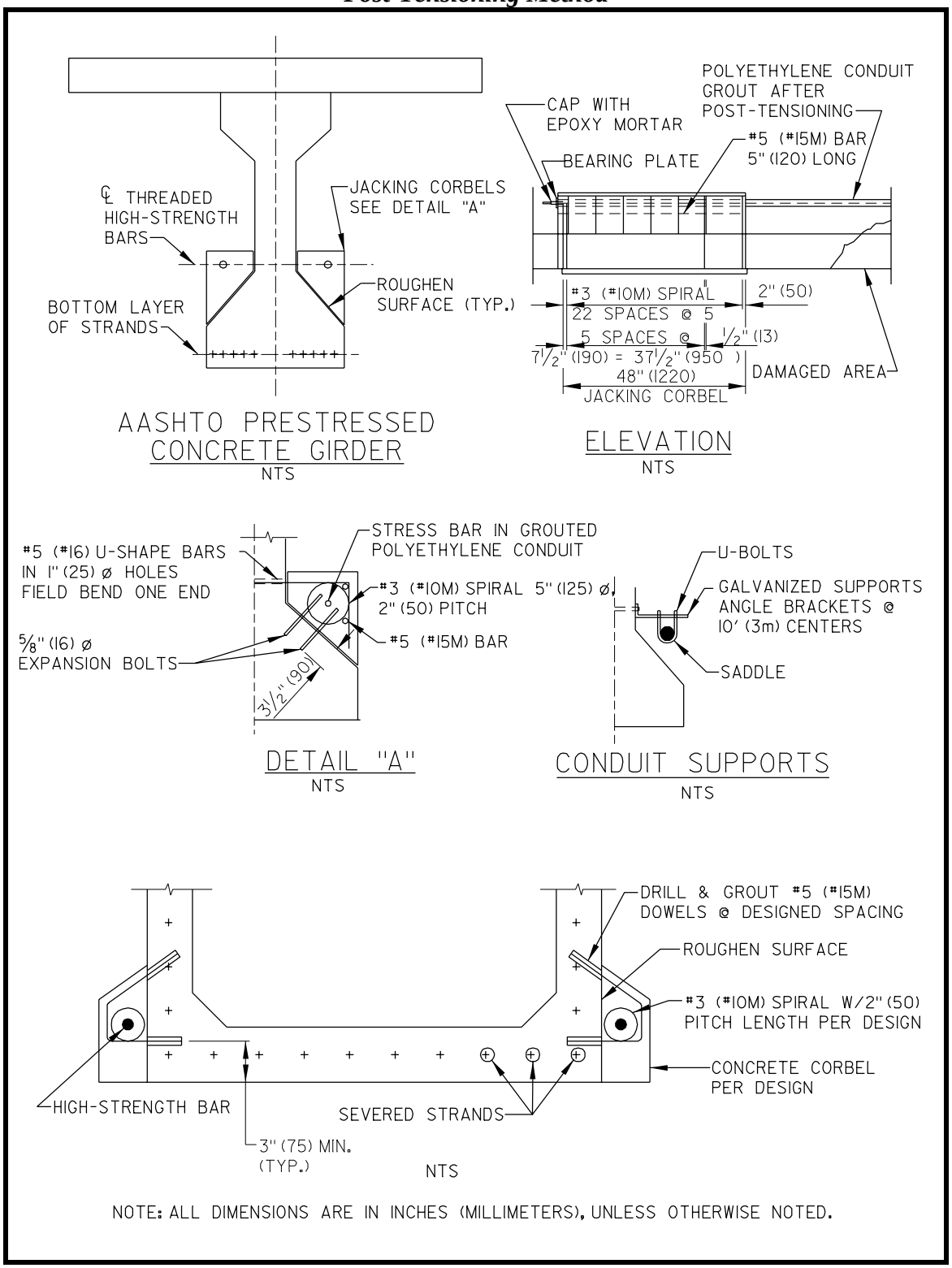

Figure 9-7
Internal Splicing

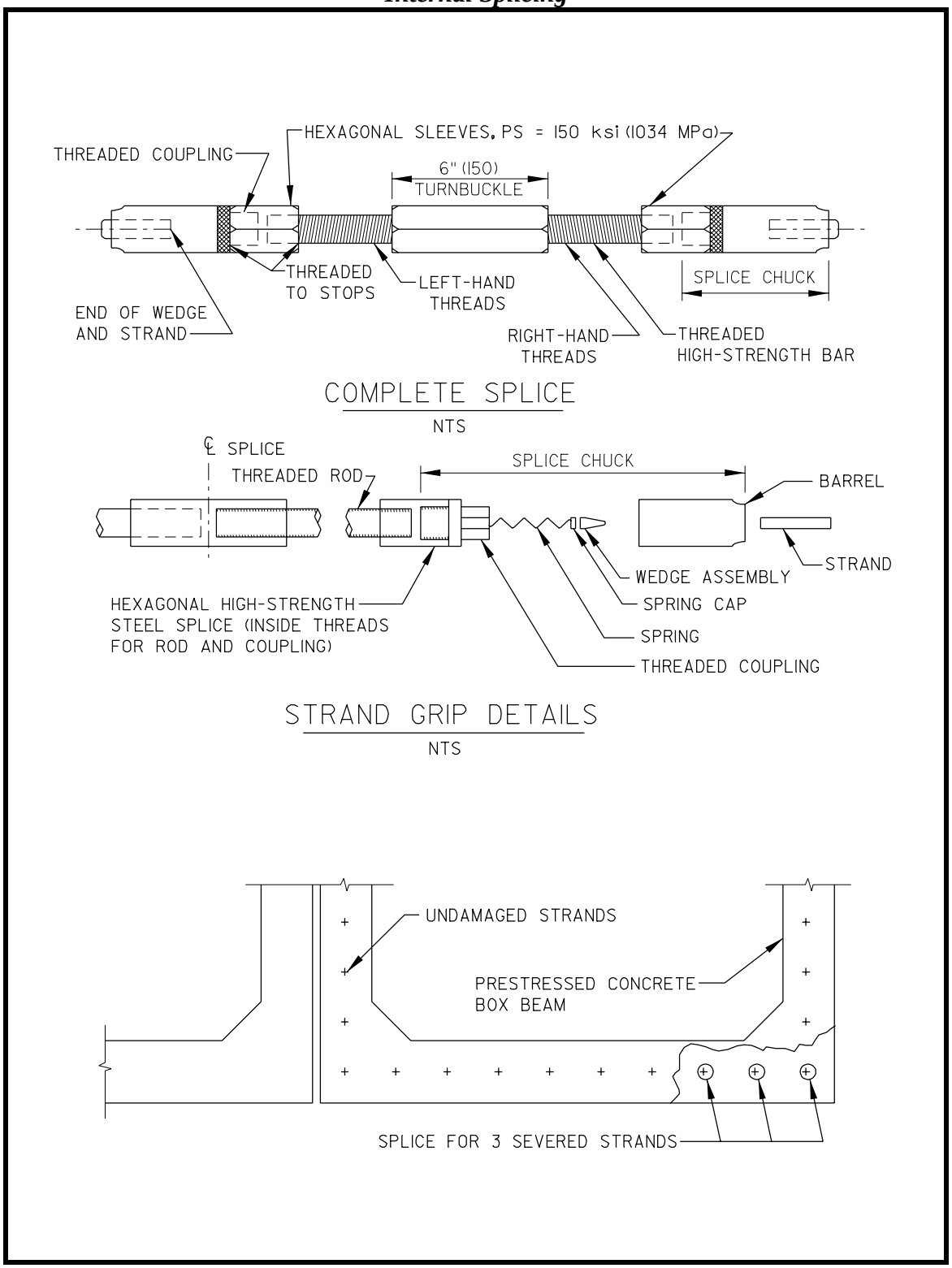

Figure 9-8
Metal Sleeve Splice

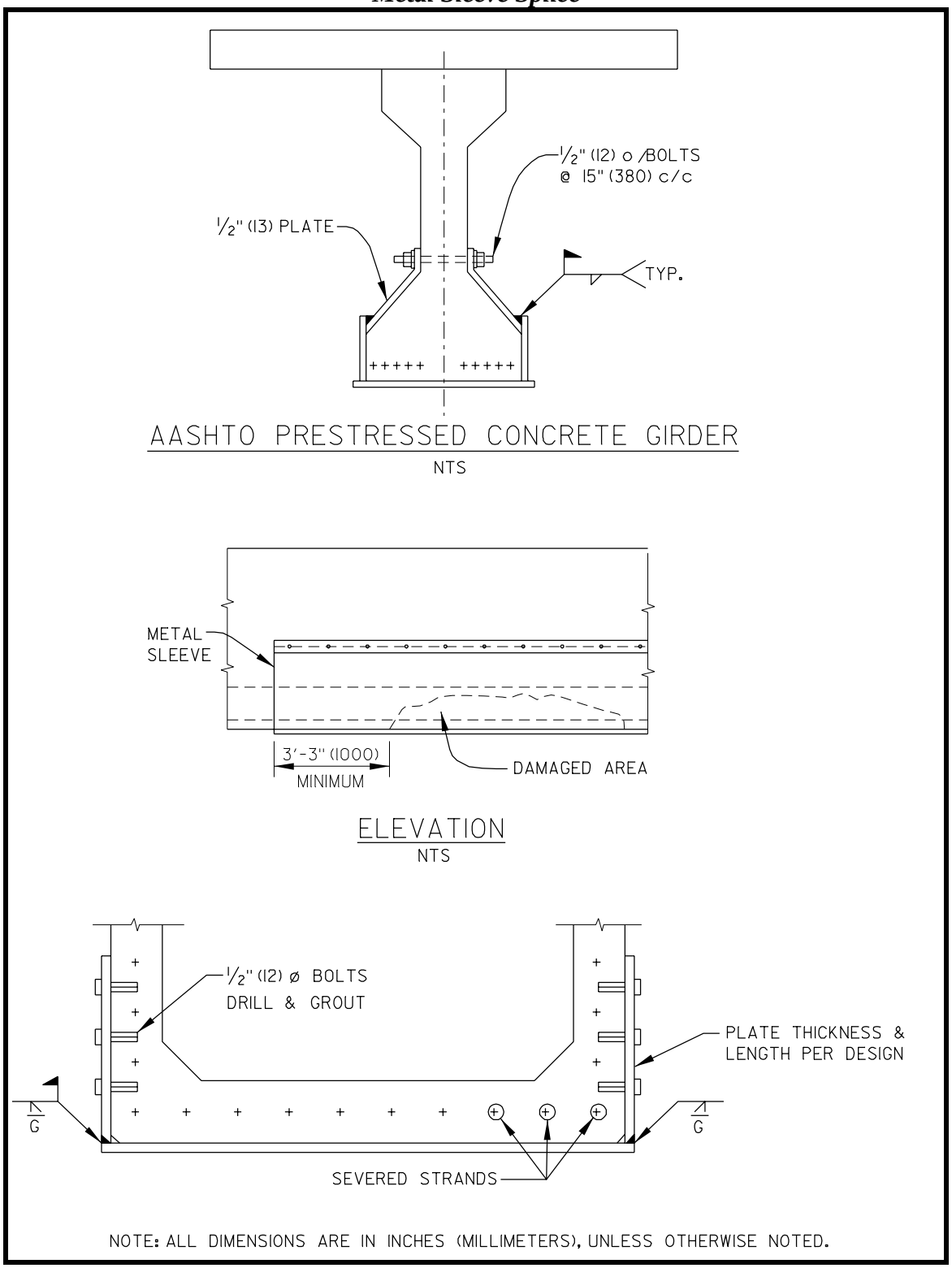

Concrete repair. Where a significant portion of the concrete has been lost, without any loss to the prestressing strands, the beam can be restored to its original condition by preloading without adding prestress and repairing the concrete. The amount of preload is determined by computing the loads that must be applied to bring the beam's concrete stresses within allowable limits. In a simple beam, maximum compressive stress caused by prestressing occurs at midspan under dead loads. Because of loss of concrete in the bottom flange, compressive stresses may exceed the allowable limit.

Preloading the beam using a loaded vehicle will reduce compressive stresses of the bottom flange and stretch out the strands in the damaged areas. Placing repair concrete and allowing it to cure before removing the preload restores the prestress force in the repair area and induces compression, thus enhancing durability and performance.

Strand repair. Where several strands have been damaged or broken, the beam can be restored to its original condition by preloading, repairing the strands, and replacing the concrete. The amount of preload is determined by computing the loads that must be applied to bring the beam's strand stresses within allowable limits. In a simple beam, maximum strand stress occurs at midspan under live loads. Because of the damage to the strands, strand stresses may exceed the allowable limit. Preloading the beam by jacking will reduce strand stresses. Care should be taken to avoid cracking of the remaining beams by excessive preloading. Strands are then repaired by splicing or another method. Repair concrete is then placed and allowed to cure. When the concrete has cured, the preload is removed and the beam restored to service. Application of a concrete sealer will enhance the durability of the repair.

9.7.2.4 Beam Replacement

If a beam cannot be repaired, it must be replaced. Replacement of a single prestressed concrete beam in a multi-beam prestressed concrete span requires consideration of the actual stress of the remaining beams, including the long-term effects of creep and tendon relaxation. It is not possible to replace one beam in an adjacent box beam superstructure.

The new member design must closely match the existing member capacity once the new sections of the deck are in place. Refer to Section 5, Concrete Structures, of the *AASHTO Specifications* for design criteria and procedures.

9.7.3 STEEL BEAMS AND GIRDERS

9.7.3.1 In-Depth Investigation

As with other structural members, an in-depth investigation must first be conducted to evaluate the repairs needed for steel beams and girders. The following must be evaluated:

- extent and location of corrosion,
- presence of cracking,
- collision or fire damage,
- fatigue stress and fatigue life analysis, and
- structural capacity.

Additionally, steel rehabilitation must include environmental considerations as well as structural considerations. The existence of fracture-critical members requires the designer to analyze the capacity

and closely scrutinize the condition of each member.

In addition to specific defects, the designer must consider such information as age, capacity, remaining life, and loading. Each of these affects the economics involved in deciding whether to repair or replace a member.

9.7.3.2 Corrosion

The designer must determine the extent of section loss of each steel member due to corrosion. Corrosion-induced section loss must be measured and included in an analysis. Both the location and extent of section loss must be defined and included in any calculations.

9.7.3.3 Brittle Fracture

For a brittle fracture to occur, three conditions are necessary:

- lack of ductility or material toughness,
- stress, and
- a drop in temperature.

The fracture resistance of a structure depends primarily on material toughness and the ability to redistribute loads to other bridge components. Designers should be cognizant of these aspects, particularly as they relate to fracture critical members.

9.7.3.4 Fatigue Cracks

The fatigue strength of a member is affected by welds, holes, notches, loss of section, corrosion, and pitting. These can lead to cracks and fracture of a member resulting from crack propagation leading to a bridge failure. Cracking can be detected visually, provided the crack is large enough to be seen and is not covered by paint, rust, or debris. Smaller cracks can be found by nondestructive methods, such as dye penetrant, magnetic particle, ultrasonics, and X-ray techniques.

Areas of concern usually occur in welded members at the following locations:

- cover plate terminations,
- flange and butt splices,
- changes in section,
- stiffener end welds, and
- lateral bracing.

For riveted or bolted members, cracks are typically found at the following locations:

- flange angle rivets,
- cover plate terminations,
- floor beam ends, and
- gusset plate connections.

A fatigue analysis must be conducted to determine the live load stress range in a member versus the allowable. Refer to Section 6.6, Fatigue and Fracture Considerations, in the *AASHTO Specifications* for fatigue analysis criteria and procedures.

9.7.3.5 Fire Damage

Exposed portions of steel bridges subjected to temperatures above 1140° F [615 C] (evidenced by damage to the zinc or lead primer) will suffer plastic deformations by exceeding the yield strength or buckling caused by stresses beyond the limit of elastic stability. The degree of damage will depend on the maximum temperature to which the steel was exposed, the duration of the exposure, and the member loading.

Embrittlement of the steel member can occur from very high temperature

exposures. In cases where the steel has been exposed to very high temperatures with significant deformation resulting, the members should be replaced. Heat straightening will not work in this case.

9.7.3.6 Collision Damage

The designer should refer to *NCHRP Report 271, Guidelines for Evaluation and Repair of Damaged Steel Bridge Members*.

9.7.4 REMEDIAL MEASURES

The appropriate type of bridge remedial measure depends on the specific bridge being rehabilitated. Different structures pose different requirements on the designer. Structures should be evaluated on a case-by-case basis.

Important to any remedial design is the weldability of the steel. This can be determined by sampling the steel in question and performing a chemical as well as a standard yield test of the "coupon" sample. The specifications defining the requirements for strength testing and chemical analysis are covered by the American Society for Testing and Materials in ASTM A370-90a and ASTM A751-90 respectively. AASHTO specification T-244-90 for mechanical tests corresponds to ASTM A370-90a, but there is no corresponding chemical test specification. The coupon must be of sufficient size to provide the machined specimens described in the ASTM test procedure.

Possible remedial measures include both preventive and reactive steps:

- cleaning and painting,
- cathodic protection,
- strengthening,
- crack repair,
- peening,
- bolting splice plates,
- heat straightening, and
- member replacement.

9.7.4.1 Cleaning and Painting

The extent of remediation of the coating of structural steel will depend on the condition of the existing coating. The designer has the following options:

- minor cleaning and overcoating,
- partial cleaning and repainting, and
- full cleaning and repainting.

The first step is a visual inspection to evaluate the condition of the existing coating. If overcoating is being considered, the designer should request the following tests from Materials and Research:

- adhesion (the higher the test results in psi [kPa], the better the adhesion),
- coating thickness for each existing layer, and
- compatibility between the new and existing coatings.

The designer must evaluate the test results in determining the best cleaning and painting options. Adhesion is measured by ASTM Test 4541, Test Method for Pull-Off Strength of Coatings Using Portable Adhesion-Testers. Structures must have test results above 200 psi [1400 kPa] to be suitable for overcoating. If the existing paint thickness is not greater than 20 mils [0.50 mm] and the adhesion test results are satisfactory, the bridge may be overcoated. If the paint thickness is greater than 20 mils [0.50 mm], the paint must be removed before the steel is repainted. A major consideration is the environmental

requirements. Refer to Section 9.2. Other factors to be considered include:

- the age of the structure,
- whether cleaning will provide a surface suitable for painting,
- the condition of the existing coating and the extent of coating failure,
- the cost of removal and containment, and
- compatibility between cleaning methods and the specified coating.

If partial or zone painting is required, fascia beams should be completely recoated. One source of information to assist with the evaluation is the Society for Protective Coatings.

Cleaning. The method and extent of cleaning depends on the condition of the existing coating, the extent of repainting required, and the coating to be applied. Normally, the Department requires near white cleaning (SSPC-SP10 or SSPC SP11) for repainting existing steel. If overcoating is specified, a high-pressure water blast is used as surface preparation. Regardless of the extent, there are two primary areas of concern during the cleaning of steel structures - hazardous paint removal and airborne abrasive blast dust which escapes a bridge site during steel cleaning operations. Refer to Section 9.2.1 for environmental considerations. All blast residue must be contained and disposed of in accordance with environmental requirements. This is achieved by enclosing the structure being cleaned to collect the residue.

Painting. The following factors should be considered when selecting a coating system:

- compatibility of the proposed coating with the existing coating,
- the presence of airborne chemical fumes or volatile organic compounds,
- the presence of water spray or misty conditions caused by nearby water,
- the height of the members above flood or tidal levels,
- unusual roadway conditions (including open steel-grid decks) that allow drainage to pass over the structural steel or to pond water on the deck, and
- accumulation of snow, ice, or debris against steel surfaces.

Usually, the Department uses different painting requirements when full repainting or overcoating is required on rehabilitation projects as for new bridges. Refer to Section 5.3.5. Due to changing technology, the designer is encouraged to seek out the latest Department standards for paint application.

9.7.4.2 Cathodic Protection

Cathodic protection for steel members may be used only with the approval of the Bridge Design Engineer.

9.7.4.3 Strengthening

Section loss may cause sufficient reduction in member capacity to require strengthening the member.

Strengthening may be accomplished by bolting or welding additional members. Strengthening a portion of a structure can be accomplished by adding a new member or replacing an existing member with a new member with greater capacity. Other methods of strengthening that the designer may consider include:

- replacing an existing member with a stronger, shallower member to increase vertical underclearance,

- adding cover plates to the bottom flange of existing stringers, and
- adding new members to share loads with parallel existing members.

Cover plates should be bolted into place.

9.7.4.4 Crack Repair

Most cracks are caused by fatigue or accident damage. There are three important considerations necessary before a decision can be made to repair a crack in a steel member:

- the cause of the crack,
- the potential for growth of the crack, and
- the size of the crack.

Generally, visible cracks should be repaired. Common repair methods include:

- drilling a hole at the end of the crack,
- strengthening the area of the crack,
- replacing the member, and
- eliminating the cause of the crack.

Prior to drilling, use ultrasonic testing to determine the location of the end of the crack. Refer to FHWA publications *RD-89-166, Fatigue Cracking of Steel Bridge Structures, Volume I*, *RD-89-167, Fatigue Cracking of Steel Bridge Structures, Volume II*, and *RD-89-168, Fatigue Cracking of Steel Bridge Structures, Volume III*, for crack repair analysis information.

9.7.4.5 Peening

Peening is a cold working process in which the surface of the component is deformed either by a high-velocity stream of metal shot or by hammer peening. The objective is to create residual compressive stresses in the surface layer, thus reducing the severity of stress concentration. Peening should be considered where welds are used to repair existing steel members.

9.7.4.6 Bolting Splice Plates

Bolting may be used as a repair method or as a supplement to other repair methods. Replacing a damaged element with a new piece of steel fastened with high-strength bolts is regarded as the safest method of repair. Fracture-critical members and tension members should be repaired by bolting.

9.7.4.7 Heat Straightening

Heat straightening is a unique method used with jacking, blocking and supplemental supports to correct member misalignment caused by impact.

Not all accident-damaged members should be heat straightened. Some members cannot be straightened due to the extent of damage. With others, heat straightening may cause additional damage to the steel member, reducing member capacity. A member may be heat straightened only once at any one location on the member. Fracture-critical members must not be heat straightened unless they are supplemented by bolting splice plates over the straightened area.

Generally, a member is considered adequately straightened if it is returned to line, grade, and shape within 0.25 inch [7 mm]. Temporary support must be provided for beams while being heat straightened. Refer to *NCHRP Report No. 271, Guidelines for Evaluation and Repair of Damaged Steel Bridge Members*.

9.7.4.8 Member Replacement

Replacing a member will be necessary where deterioration, accident, fire damage, cracking, or overstress have caused such extensive damage or loss of capacity to make repair impractical and uneconomical.

When considering member replacement as a rehabilitation measure, the designer must perform rigorous analysis to ensure that the member can be removed and replaced without reducing the overall capacity of the structure. Temporary supports are generally needed unless the dead load is removed or supported by other temporary means.

9.7.5 BEARINGS

Bearings transmit loads to the beam seat area and accommodate movement of the bridge. Bearings are designed to carry static loads and dynamic forces. Bearings may be either fixed or expansion. Fixed bearings allow only rotation of the girders. Expansion bearings allow rotation and translation. The types of bearings commonly found in Delaware are:

- steel,
- bronze or steel sliding plate,
- rocker,
- elastomeric,
- polytetrafluoroethelyene (PTFE, also called Teflon®), and
- pot bearings.

Rocker bearings should be replaced with a more stable type.

All bearings shall provide full, uniform bearing when under full load.

9.7.5.1 Types of Problems

Any problem that prevents rotation or translation of a bearing should be corrected. There are five types of serious problems that require corrective action involving bridge bearings:

- deterioration and corrosion with or without section loss,
- bearing element misalignment in line with the member,
- frozen bearings,
- broken anchor bolts, and
- transverse displacement (especially on skewed bridges).

Generally, the primary cause of bearing problems is exposure of the bearings to the elements, combined with deck joint leakage, which carries rainwater, deicing chemicals, and dirt from the roadway above onto the bridge seat area.

9.7.5.2 Seismic Requirements

Bridges should be upgraded to meet current seismic requirements when they are rehabilitated. Refer to Section 5.5.2.

9.7.5.3 Bearing Rehabilitation Methods

The decision to rehabilitate or replace bearings depends on the current condition of the bearing and the potential for recurrence of the problem. Bearing rehabilitation methods include:

- cleaning and painting,
- jacking and resetting, and
- lubricating.

9.7.5.3.1 Cleaning and Painting

Extreme deterioration from corrosion can cause a bearing to lose section and, in the worst case, failure of the bearing to transmit loads to the substructure as designed. Routine maintenance cleaning (removal of accumulated debris) and cleaning and painting (power tool or blast cleaning and recoating) can protect and prevent serious section loss that might require bearing replacement. Cleaning and painting bearings is subject to the same environmental requirements as for steel beams. Refer to Section 9.7.4.1.

9.7.5.3.2 Jacking and Resetting

Jacking and resetting a bearing is usually required due to misalignment. Misalignment may occur on elastomeric, sliding plate, or rocker bearings. Jacking the beam can be accomplished by installing structural elements between beams and using hydraulic jacks to support and raise the beam. Refer to Section 9.8.3 for a discussion of jacking requirements.

Resetting bearings generally involves repositioning the masonry plate to align with the sole plate. This may require replacement of anchor bolts. If anchor bolts are not damaged or deteriorated, they can be reused.

Resetting bearings may introduce eccentricity of load into the substructure. All new bearing plates must be designed for the reorientation of loads. The designer should consider the new load path and the effects of jacking and resetting the new bearing plate on the substructure.

As a minimum, an analysis must be performed to review and check the original design.

A neoprene or fabric bearing pad with a minimum thickness of 0.125 inch [3 mm] should be placed under the new masonry plate to accommodate any bearing area roughness.

The bearing area and the area adjacent to the new bearing must not be deteriorated, and all surfaces must be sound and level.

Any condition that caused the bearing to be misaligned must be investigated and corrected.

9.7.5.3.3 Lubrication

Uncoated steel used in steel-on-steel expansion bearings will corrode. The corrosion will cause the bearing surfaces to become rough. The coefficient of friction between the plates will increase due to the corrosion, and the bearing will cease to function. This condition can be improved and avoided by lubricating the bearings or by providing bearing materials with low coefficients of friction. Bearings are either externally lubricated or self-lubricated through the selection of special materials.

The Department uses a low-viscosity penetrating grease applied externally to existing sliding plate or rocker bearings. Bearings are not jacked to place lubricant between the plates.

The function, roughness and condition of the bearing are the deciding considerations in replacement or rehabilitation of a bearing.

9.7.5.4 Bearing Replacement

Bearings are replaced as part of a bridge rehabilitation project, or when bearings or bearing areas become so severely deteriorated as to jeopardize structural safety.

Bearing replacement requires beam jacking. Jacking bearings can be accomplished by jacking from the bearing seat area or by constructing a jacking frame supported on the footing of the substructure or on soil under the bridge. When all bearings in a substructure unit are replaced, the replacement bearings should be upgraded to current Department standard bearings rather than the same bearing being replaced. Individual bearings are replaced in kind. The designer should consider seismic design in the analysis for bearing replacement. Refer to Section 5.5.2.

9.8 FOUNDATION AND SUBSTRUCTURE

Needed repairs to foundations and substructure units are generally included in any Department rehabilitation project. Types of rehabilitation efforts include:

- crack repair,
- replacement of deteriorated concrete,
- bearing seat repair,
- protection of substructure,
- pile repair,
- scour countermeasures,
- stabilization,
- underpinning,
- slope paving, and
- drainage.

9.8.1 CRACK REPAIR

Crack repair for foundations and abutments is similar to repair of cracks in concrete beams. Refer to Section 9.7.1.7 for repair methods.

A leaking crack can be pressure grouted if the flow of water is temporarily halted. This is done by inserting expanding chemicals into or behind the crack.

9.8.2 REPLACEMENT OF DETERIORATED CONCRETE

Replacement of deteriorated substructure concrete is accomplished using two methods: pneumatically applied mortar and cast-in-place. Methods that identify the areas of concrete removal include visual inspection, sounding, field chipping, and coring. Refer to 9.3.1.1. Chloride content and half-cell analyses are usually not performed on substructure components but can be considered.

Substructure repair methods, materials, and practices are the same as for repairs to concrete beams. Refer to Section 9.7.1.

9.8.3 BEARING SEAT REPAIR

Steel jacking beams, appropriately designed and detailed, are most suitable for jacking steel beam spans. Refer to Figures 9-9 for an example. Normally, the contractor is required to submit the jacking procedure for Department approval.

Jacking is required to accomplish bearing seat repairs. Bearing seat repairs may be required even if bearings are fully functional, such as where substructure concrete has spalled or deteriorated under a bearing masonry plate.

Jacking beams can be done from adjacent beam seat areas or from separate jacking frames. Jacking frames are used where jacking from the beam seat area is not practical. When jacking frames are used, subsurface investigation shall be performed. Cross-braced frames are best suited. Frames

are founded on existing footings or temporary footings constructed on soil. Piles are not normally required under jacking frame footings because spread footings can provide sufficient bearing capacity. Where spread footings will not provide sufficient support, piles may be driven through holes in the deck. A plate or beam can then be welded to the pile (after it has been cut off to the required elevation) to support the jacking frame. Jacking frames are costly and should be avoided when possible. The designer must analyze the beam at the location where jacking of the beam will take place. Bearing and jacking plates, web stiffeners, and bracing may be required.

The jack must be positioned within the existing reinforced area of the beam seat at least 2 inches [50 mm] from the edges. This may preclude placing a jack in front of the bearing under the beam. Jack capacity must be specified with a factor of safety of 1.5 based on the calculated design jack load.

When individual bearings are being jacked, the load on the bearing should only be relieved. Raising the beam more than 0.125 inch [3 mm] may not be desirable. When all bearings on one end of a simple span are being jacked, lifting the beams is preferred. Lifting may cause deck cracking in continuous spans. In this case, the designer should only relieve the load. If traffic is being maintained on the bridge, the span should be raised only the minimum necessary to achieve the repairs. The deck joint configuration must be evaluated.

Manifolding of hydraulic equipment for jacking may be used, if approved by the Bridge Design Engineer. Because of jack variability, individually operated hydraulic jacks are better suited for jacking multiple beams or girders. Jacking under live load shall not be permitted unless otherwise approved by the Bridge Design Engineer.

Once a structure is jacked, the load must be secured before any existing material is removed. This can be done by two methods. Jacked loads are secured by either temporary blocking (short columns or cribbing), or the use of locknut jacks which are not dependent on hydraulic pressure. Hydraulic jacks are not used to support loads, even if the hydraulic pressure is maintained.

Lateral and vertical bearing movement should be monitored during any jacking operations. Standard surveying instruments should be used to detect undesirable movement. Provisions must be made in the design for expansion and contraction. Simple lubricated sliding plates may be effective. Stainless steel and TFE sheets between bearing plates can also be used.

Once the beams are jacked and blocked, concrete removal may begin. The concrete removal limits are first saw cut and the corners hand chipped. Saw cuts are stopped at the corners to prevent overcutting. Concrete is then removed. The limits should be squared and benched in both plan and section. Concrete is replaced in accordance with Section 9.7.1. Bearing seat repairs are performed using conventional reinforced concrete.

Figure 9-9a
Jacking Details

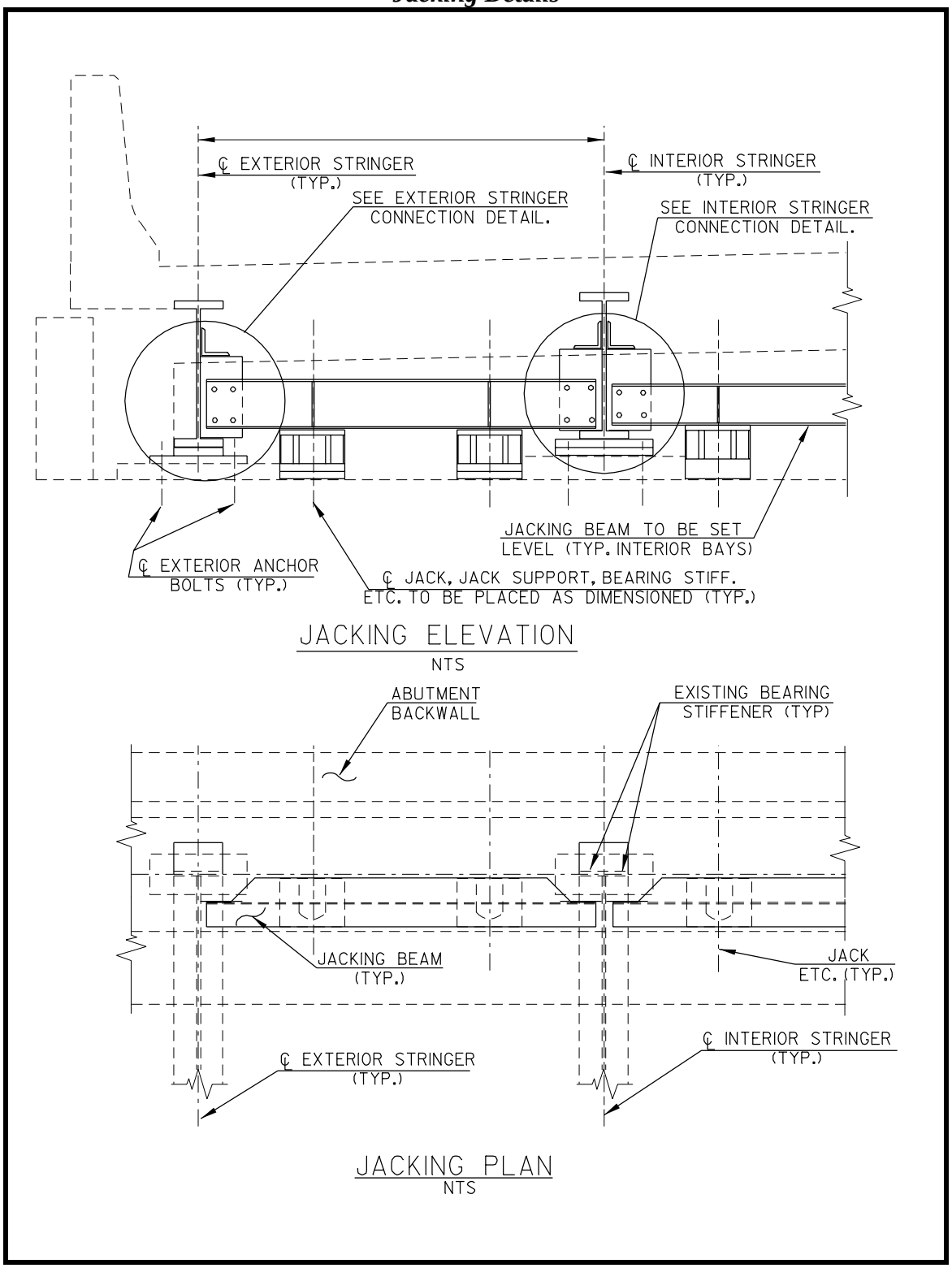

Figure 9-9b
Jacking Details

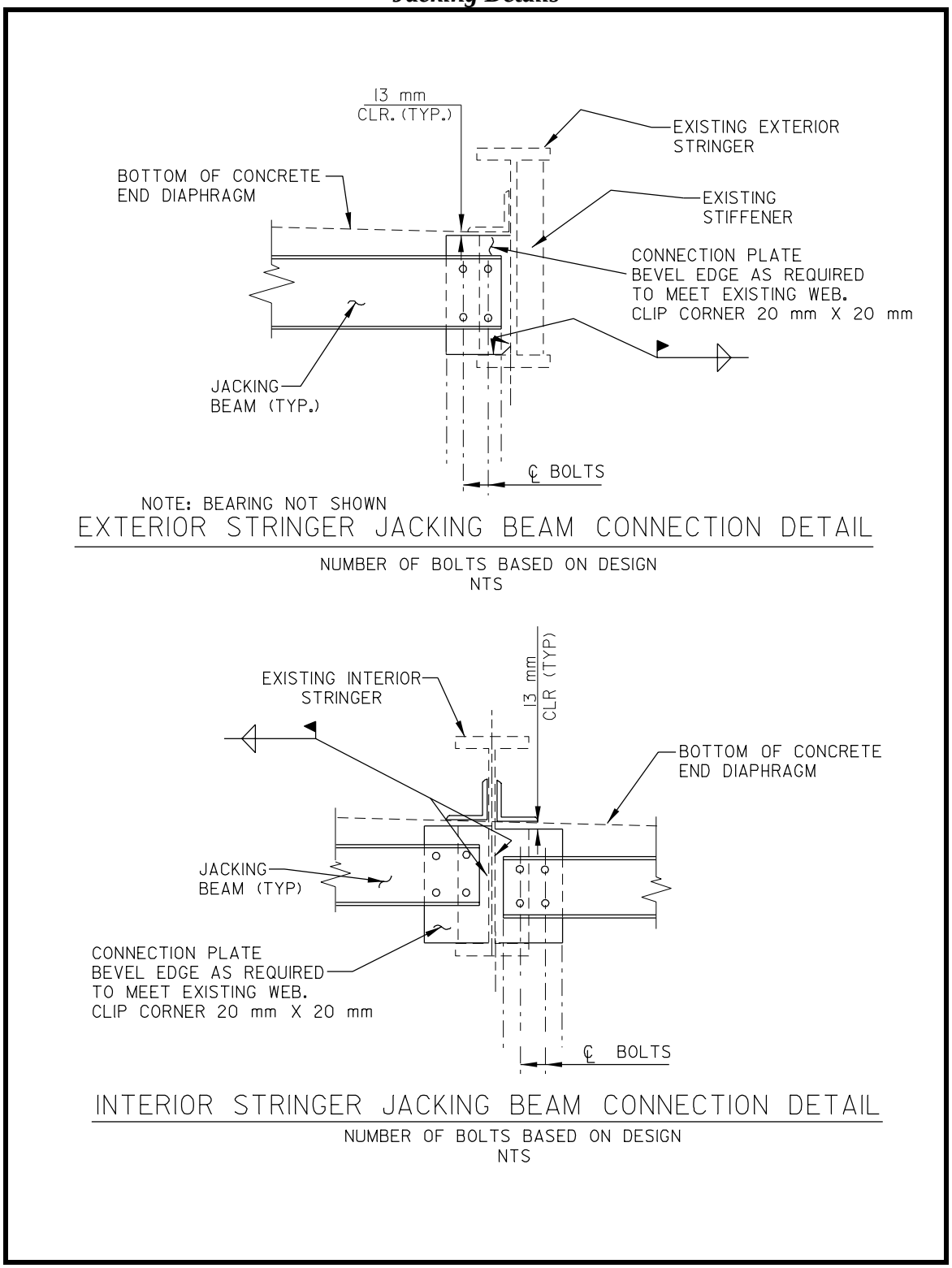

Figure 9-9c
Jacking Details

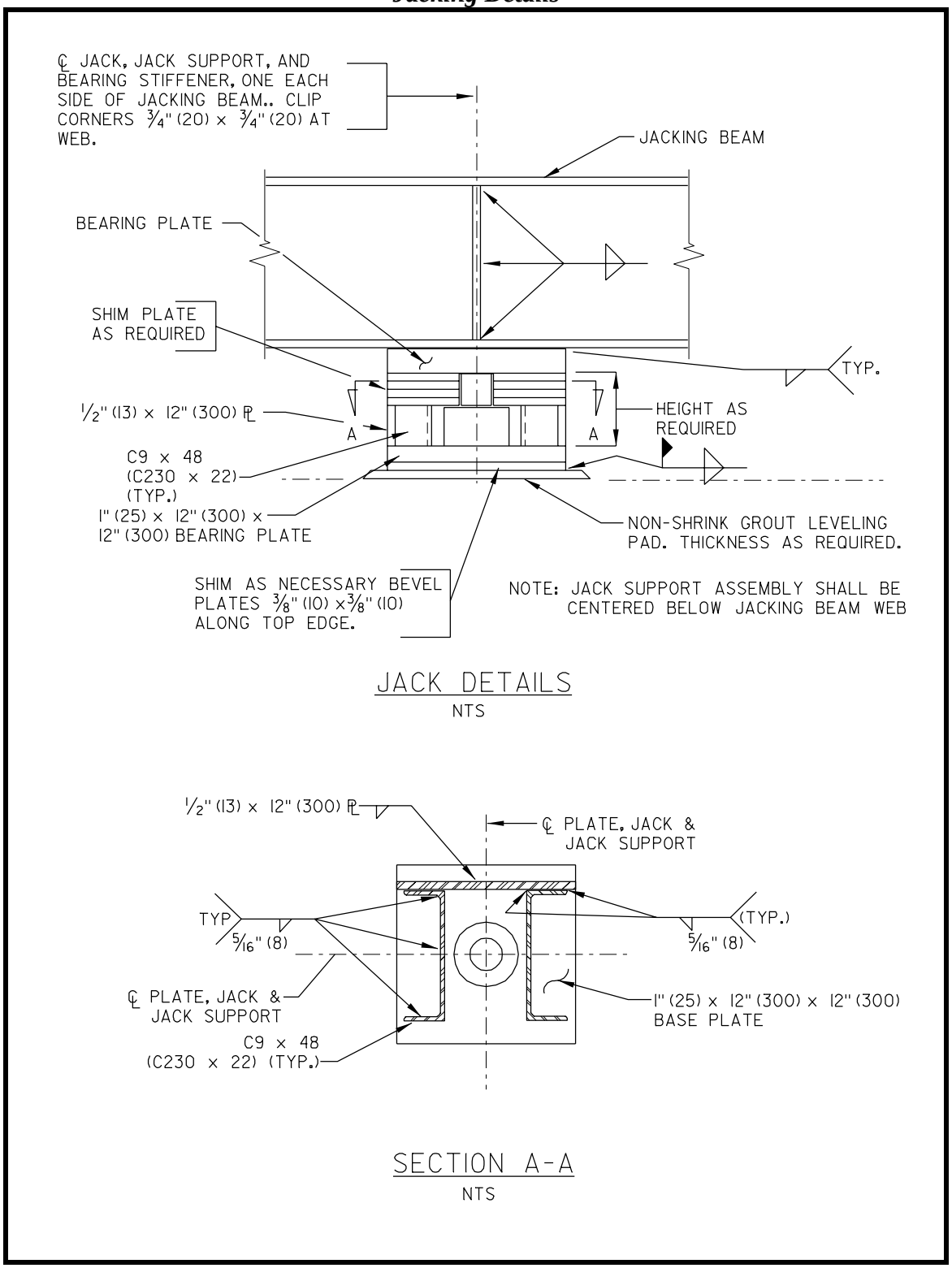

After repairs are completed, the substructure bearing seat area should be power washed and the seat area, pier, or abutment faces and backwall sealed to prevent water penetration.

9.8.4 REPAIR OF CONCRETE SUBSTRUCTURES OVER WATER

Repair of substructure elements includes:

- underwater repairs,
- splash zone repairs, and
- above-water repairs.

9.8.4.1 Underwater Repairs

Small concrete spalls can be repaired underwater without dewatering using hand-applied epoxy mortar. Large repairs are made by forming the repair and placing conventional quick-setting concrete using tremie methods. In some instances, a diver will be required for inspection or placement of repair concrete under water. Where repairs must be made under water, the costs may be higher. If working in the dry is required, a cofferdam or similar method to create a watertight form must be constructed.

First, all unsound concrete is removed. The designer must ensure that the structural integrity of the substructure is not compromised in the removal operations. This includes individual elements as well as the integrity of the total substructure unit.

If reinforcing is encountered in the chipped area, it must be inspected and any deficiencies corrected. Any primary reinforcing bars with section loss greater than 10 percent should be supplemented. Temperature reinforcing can sustain up to 30 percent loss of section without being supplemented. Unreinforced sections should be reinforced by doweling 0.625 inch [16 mm] steel bars into adjacent sound areas. Center-to-center spacing of bars should not exceed 18 inches [460 mm].

A suitable form is then attached to the concrete using expansion bolts. The form may extend beyond the original concrete surface. A seal between the form and the concrete must be achieved. This can be accomplished with a gasket or other means. Refer to Figure 9-10.

Concrete is pumped into the formed void from the bottom and allowed to overflow the area out of an inspection hole at the highest point of the deteriorated area. More than one inspection hole may be needed. Sufficient excess concrete must be allowed to run from the inspection hole to insure the integrity of the repair area. After curing, the forms may be removed and the repair inspected.

9.8.4.2 Splash Zone Repairs

Splash zone repairs can be accomplished in the same manner as underwater repairs or, since the top of the repaired area is above the water surface level, the repairs can be accomplished “in-the-dry”. Refer to Figure 9-10.

Areas to be repaired in-the-dry are prepared the same as underwater repairs, except that once the form is installed and the seal achieved, all water is pumped from the void created by the chipped area and the form. Concrete is then placed using the tremie method, overflowing the form to remove any unsuitable or diluted concrete. Generally, the in-the-dry method requires the forms to be larger than the original concrete structure. After curing, the forms are removed or may remain as additional protection. Random inspection of the repaired areas is required, and in these cases removal of the forms is necessary.

Figure 9-10a
Substructure Repairs

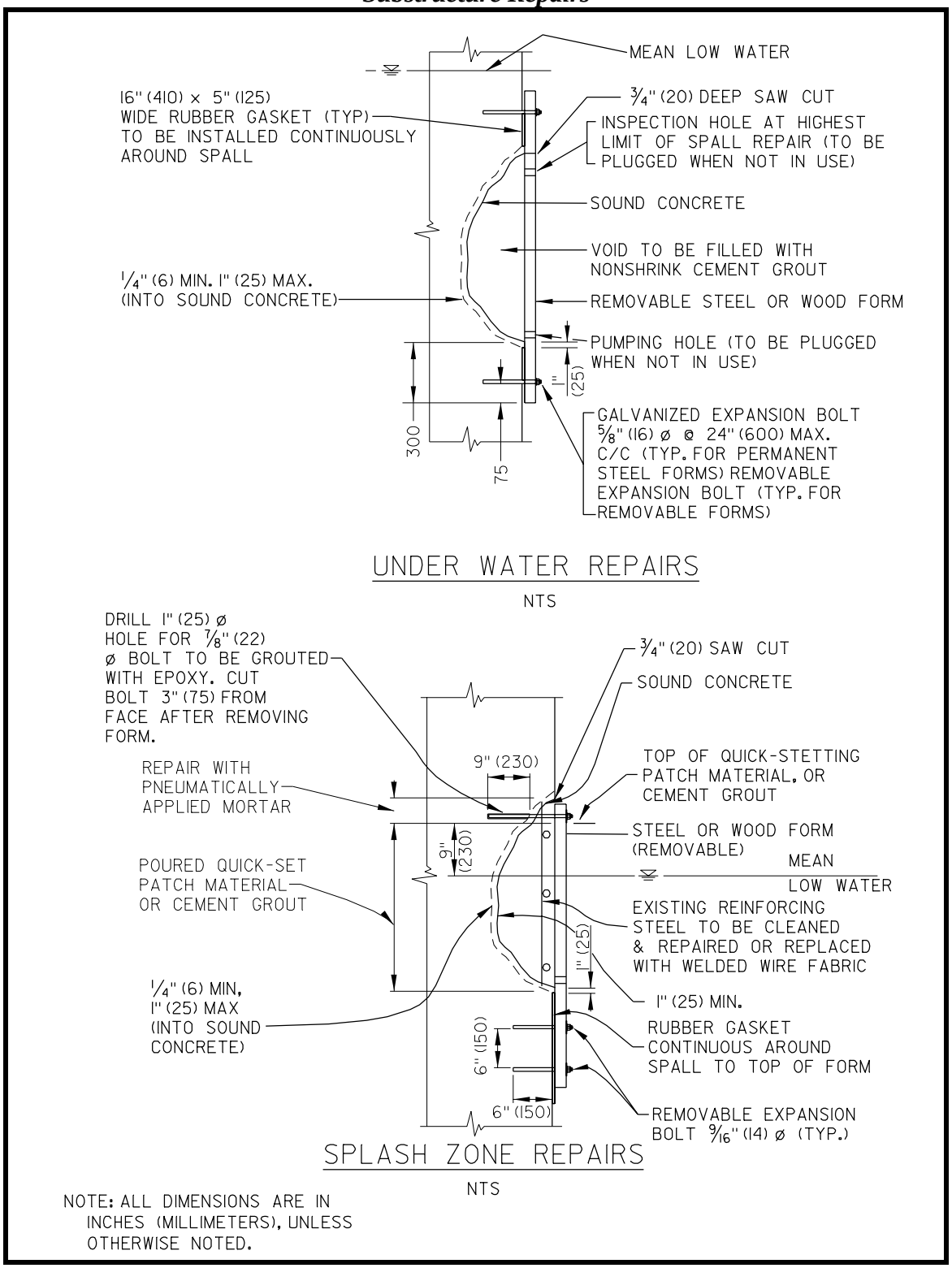

Figure 9-10b
Substructure Repairs

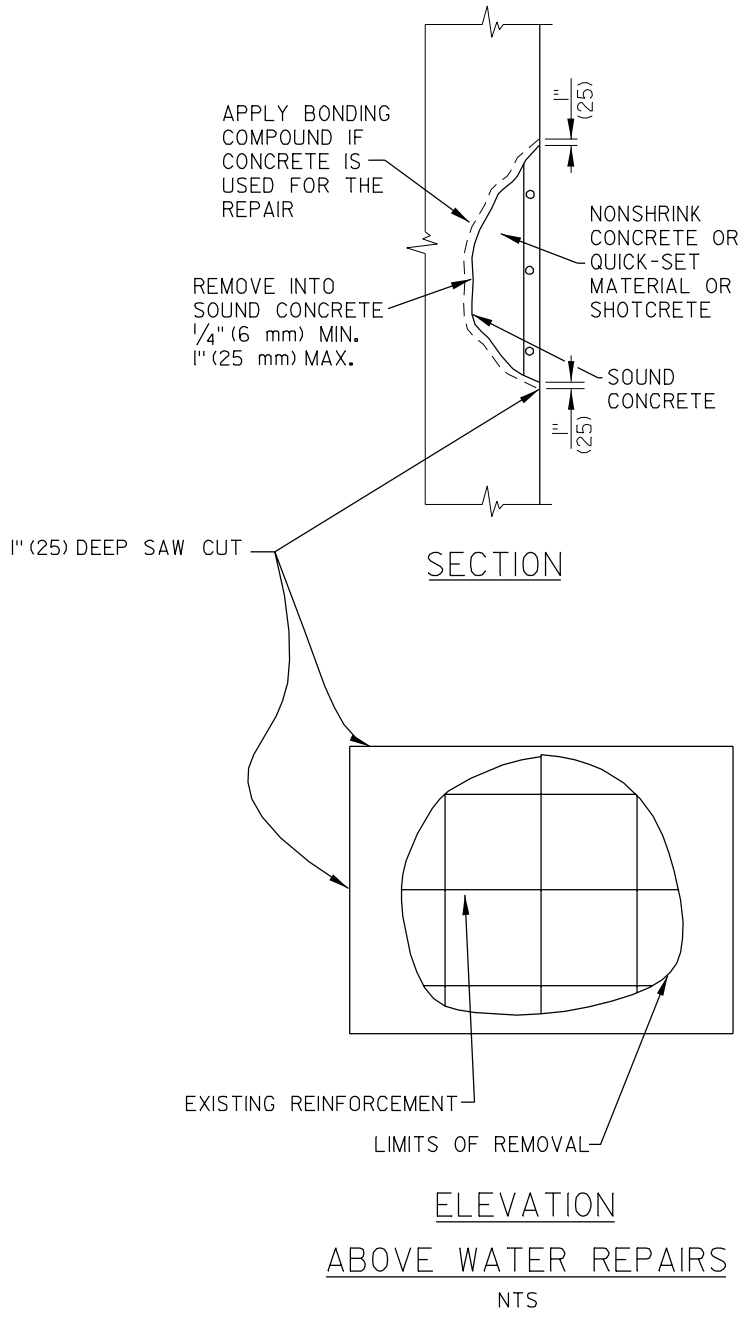

NOTE: ALL DIMENSIONS ARE IN INCHES (AND MILLIMETERS).

9.8.4.3 Above-Water Repairs

Above-water repairs to substructures are made with methods similar to those used to repair other concrete members. See Sections 9.3.1.4, 9.7.1 and 9.8.2, and Figure 9-10.

9.8.5 PILE REPAIRS

Two structural analyses should be performed to evaluate pile capacity: for the existing condition and after the removal of deteriorated concrete. The designer will evaluate the results of the analyses to determine any needed restrictions on live loads or contractor operations during construction. If the existing pile does not have adequate capacity to support dead load, supplemental support must be provided during repairs. See Sections 9.8.7.2 and 9.8.7.3 for methods of support.

One example of pile repairs for the splash zone is shown in Figure 9-11. This type of repair can be used for prestressed piles, CIP concrete piles, or H-piles. When significant deterioration of the pile has occurred, a detailed analysis must be performed to determine the repair requirements of the remaining section and the need for supplemental support during repairs.

- **Prestressed concrete piles**. If the analysis indicates inadequate capacity, replacement piles may be considered. If deterioration is not significant, encasement will protect the prestressed pile from further deterioration.
- **CIP concrete piles**. Where deterioration of CIP concrete piles has occurred, encasement, using the method shown in Figure 9-11, can adequately restore the section of the pile and the structural capacity. Severely deteriorated pile shells require close evaluation. Concrete deterioration within the shell may extend significantly beyond the splash zone. Repairs may require removal of all deteriorated concrete and restoration of pile capacity using supplemental members followed by encasement of the pile.
- **H-piles**. Section loss for H-piles must be repaired by adding plates, channels, or angles to the existing section before encasement. The supplemental members must extend beyond the limits of deterioration.

9.8.5.1 Timber Pile Rehabilitation

As with any material, repair or replacement of timber pile is eventually required. Repair methods used by DelDOT include the following:

- Concrete jacket
- Epoxy injection
- Reapplication of wood preservative
- Composite fiber wraps

Concrete jackets are used in areas of lost structural capacity due to rot, insect damage, or physical damage. The repair method consists of a fiberglass jacket 8 in [200 mm] larger in diameter than the pile, galvanized wire mesh and concrete fill. Details are shown in Figure 9-13.

Epoxy injection is carried out by installing injection ports, sealing the outside of the crack, and pumping the epoxy under pressure. The crack is considered full when epoxy flows out of the return ports.

Reapplication of wood preservatives is complicated because the common preservatives are hazardous and can be dangerous to humans and the environment in their liquid state. Therefore, DelDOT's practice for field preservative treatment is to drill holes and install solid "anti-fungal" cartridges. These cartridges contain a liquid anti-fungal wood preservative that spreads through the wood by capillary action. The drilled holes are then sealed with hardwood creosoted plugs.

Figure 9-11
Pile Repairs

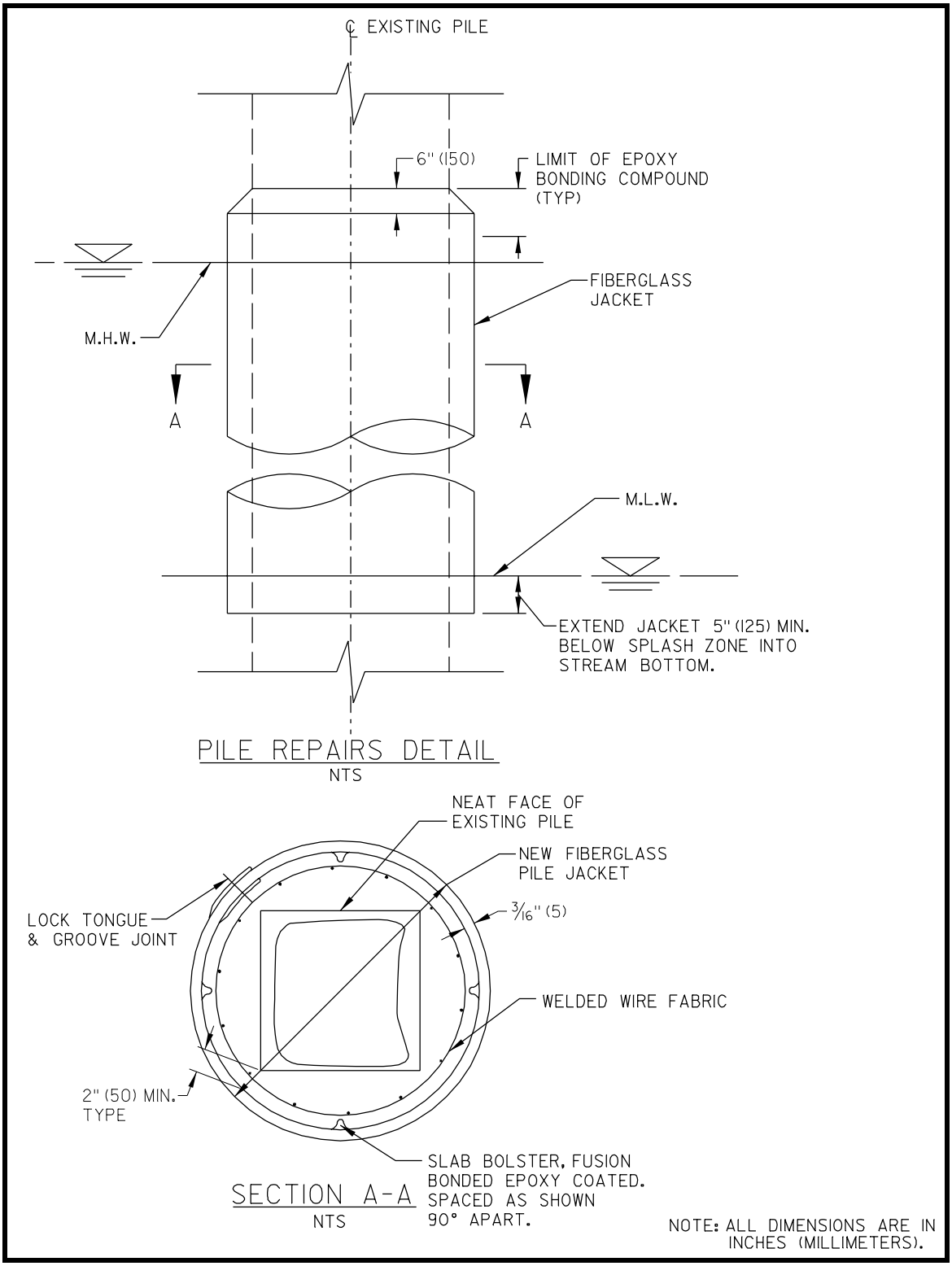

Figure 9-12
Timber Pile Repair Detail Example

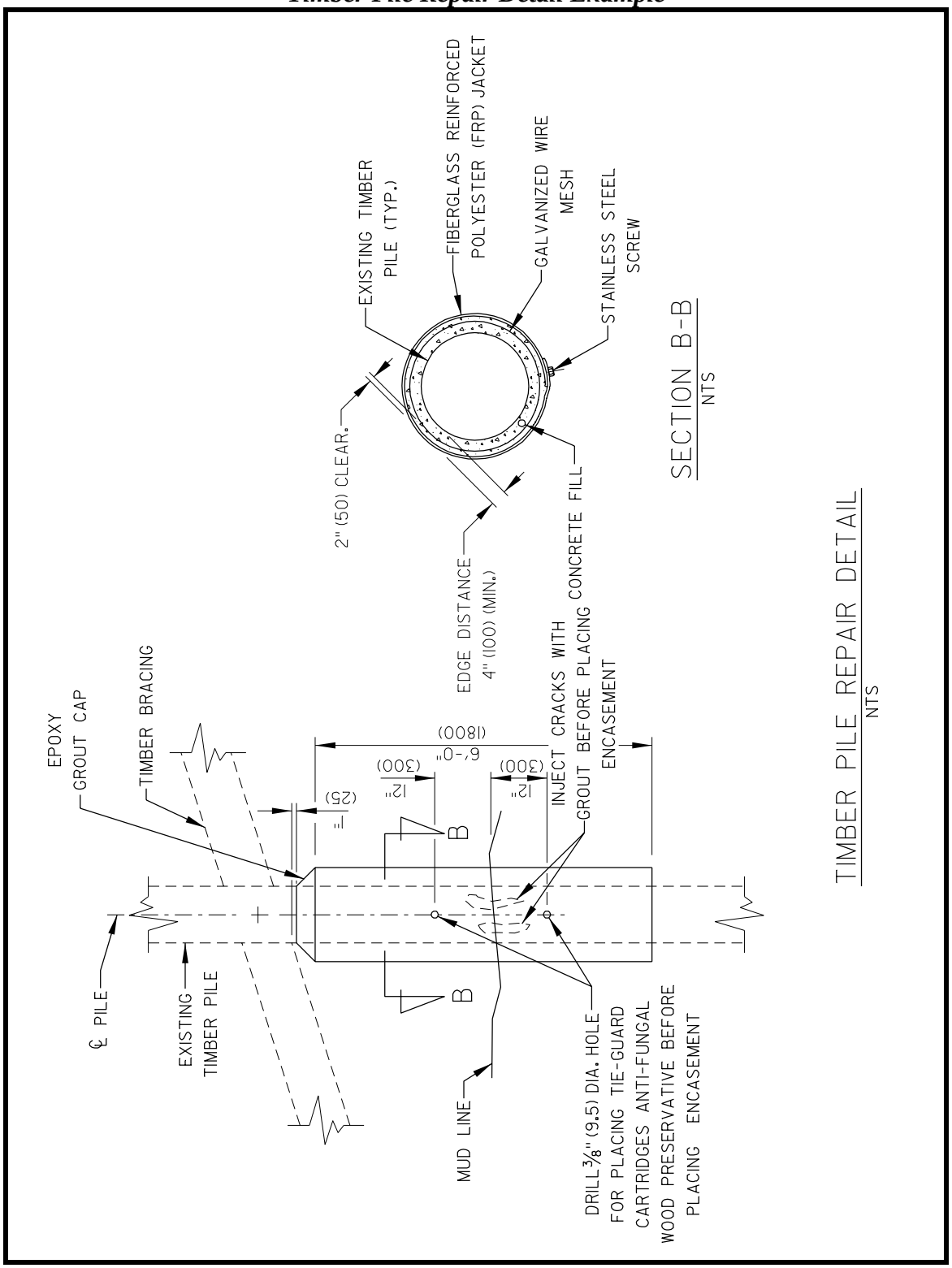

9.8.6 SCOUR AND UNDERMINING

Every bridge over a waterway should be evaluated as to its vulnerability to scour. Scour is the result of stream flow that transports streambed material away from the structure. Scour can occur between substructure units or undermine the footings of substructure units. Refer to Section 3.4 for scour evaluation and protection.

Scour has several causes, including:

- poor choice of bridge location,
- meandering river bed,
- inadequate flow area or restrictions imposed by the bridge substructures (substructure size or shape),
- inaccurate estimation of flood level and velocity,
- excessive storm (superflood),
- poor orientation of substructure elements with respect to water flow,
- fine-grained riverbed material that can become waterborne with a small increase in velocity,
- unpredictable increases in the flow caused by debris or the failure of an upstream dam,
- lack of scour prevention measures such as riprap,
- improperly designed riprap where stronger measures, such as sheet piling, should have been used, and
- adding riprap or constructing a cofferdam around a scoured pier may induce undermining of other piers.

Scoured areas can be successfully repaired only if the cause is first identified and understood. The impact of any countermeasures must also be evaluated. Scour countermeasures must be properly designed. Refer to Section 3.4.

Materials such as interlocking concrete elements, cable-tied concrete blocks, revetments, or an articulated grout mattress of quilted cloth and grout have been used. The most commonly used repair methods are:

- riprap,
- bagged concrete, and
- sheeting and filling.

9.8.6.1 Riprap (Stone or Sacked Concrete)

Riprap may be stone, broken concrete, or sacked concrete. Broken concrete must meet the same specifications as stone riprap. The contract documents must specify that concrete from the bridge is to be salvaged for use as riprap, when that use is desired. Sacked concrete is made by filling sacks with a concrete mixture. Hydration occurs after the sacks are placed in the water. Where applicable, dumped or placed riprap of the design size, thickness and layers is considered the most economical method of repairing and preventing scour damage. The riprap is placed to a maximum slope of 1:1. A 2:1 slope is more desirable. Sacked concrete riprap may be used on steeper slopes than stone.

Riprap repair will include the following:

- establish level bearing area, if possible,
- place filter cloth,
- place small bedding stones, and
- place riprap, using smaller stones to key larger stones in place.

Grouting riprap is discouraged.

9.8.6.2 Bagged Concrete

Unfilled bags are placed under a partially undermined foundation and positioned to restore support. Bags are placed in an interlocked configuration to produce a maximum slope of 1:1 when filled. Grout pipes must be placed (prior to filling the bags) to allow grouting of the void spaces behind the bags. Grout pipes are placed between the bags or by coring through the footing and are spaced about 10 feet [3 m] apart. The bags are then filled with tremie concrete or grout by pumping. Vents must be placed to allow water and laitance to be displaced by normal full-strength grout to ensure that non-structural material is not trapped below the footing. When the bags are filled and cured, grout is pumped into the void to fully restore bearing to the footing. Stone riprap is placed to protect the completed grouted bags. The level of the riprap should conform with stream cross section, if possible. Refer to Figure 9-13.

Figure 9-13
Foundation Repairs – Bagged Concrete

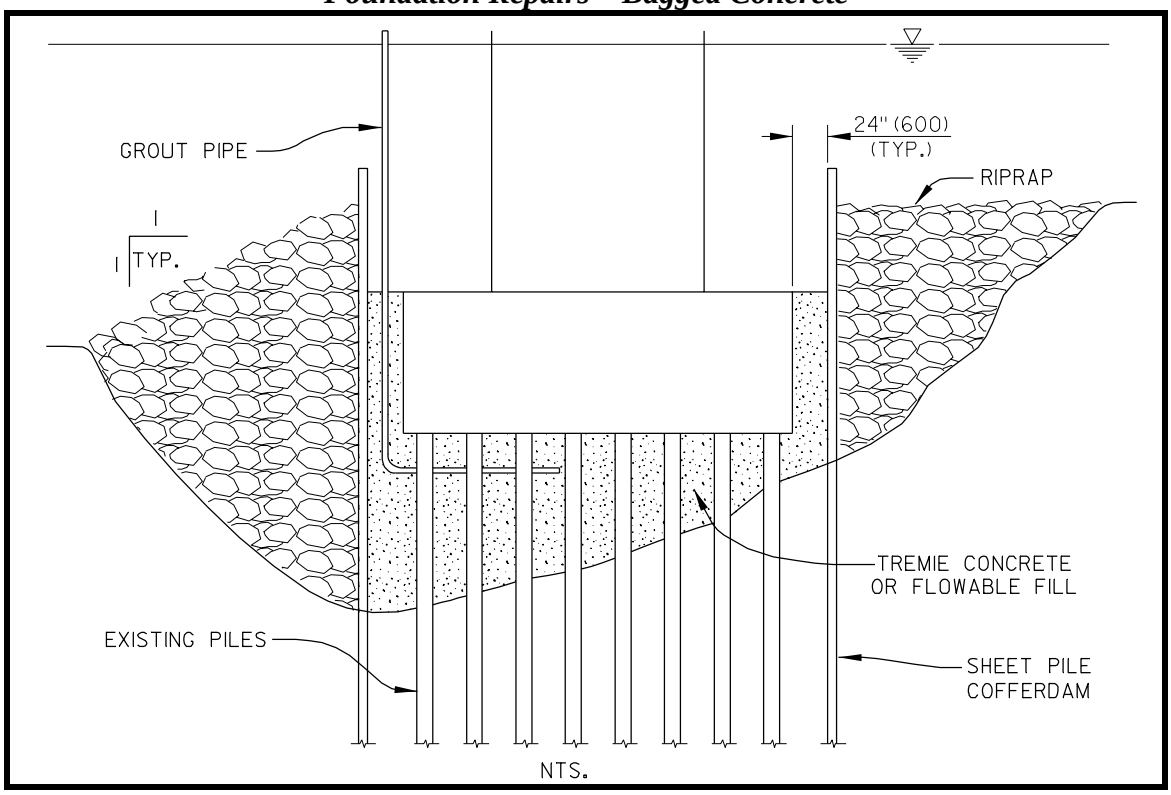

Figure 9-14
Sheeting and Filling

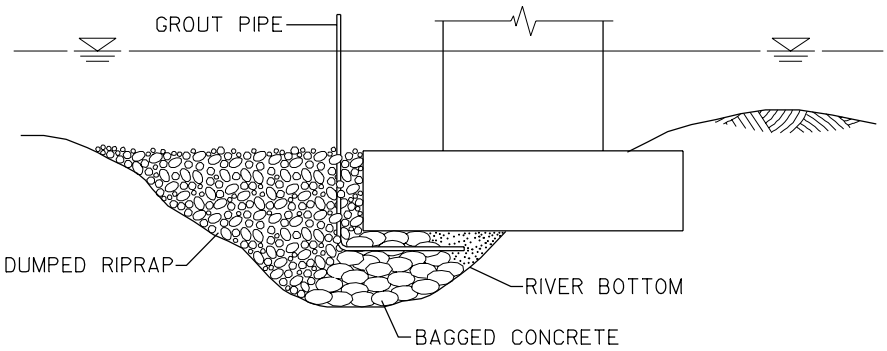

9.8.6.3 Sheeting and Filling

Complete undermining of the foundation requires immediate repair. An undermined foundation is a critical condition. If piles are exposed, lateral and vertical stability of the substructure becomes critical. If the piles are of the friction type, erosion of soil around them lowers their capacity. If they are end-bearing piles, deepening scour could reduce their stability. The unsupported length of piles changes when scour removes the side support and may cause buckling.

To make the repair, steel sheeting is installed around the foundation, often after a section of the deck is removed. Sheeting may be driven from under the deck, if there is sufficient clearance. Short lengths are driven, additional short sections are welded on, and the driving is continued to the appropriate depth.

Tremie concrete or flowable fill is pumped into the sheeted area until it reaches the top of footing. Several pipes may be required. The pipes and the sheeting are then cut off at the desired elevation and riprap is placed around the sheeting. See Figure 9-14. Tremie concrete and flowable fill may bond to existing piles. This will add significant dead load to the piles. A structural analysis must be performed to evaluate the effect of the increase in load.

9.8.7 STABILIZATION AND UNDERPINNING

Substructure units that have experienced foundation displacement (settlement), or where conditions indicate potential displacement, require stabilization and underpinning. Methods of stabilization or underpinning include:

- driven piling and needle beams,

- structural frames, and
- tie backs and deadmen (for abutments).

Both steel and concrete materials are used.

Each of these methods allows supporting the existing superstructure while permanent construction restores the bridge to full traffic.

9.8.7.1 Driven Piling and Needle Beams

Driven piling and needle beams are used primarily to underpin spans that have dropped due to pier settlement. With this method, steel piles are driven, either as a cluster beyond the outside width of the substructure, or as a line of piles driven through the deck of the dropped spans. The piles are cut off and a short "needle beam" is then "threaded" under the span and bears on plates positioned on top of the piles. All connections are made by welding. If necessary, the span can be jacked from the needle beam to restore the original roadway elevation. Anchor bolts are placed to connect the needle beam to the superstructure. Because the piles are placed beyond the width of the pier on both sides, this method may reduce the structure opening and impede stream flow temporarily.

Underpinning with piling and needle beams is normally a temporary repair. If it is to be constructed as a permanent repair, a hydraulic and hydrologic evaluation must be performed. In addition, the piles must be permanently protected or encased. See Figure 9-15.

Figure 9-15
Underpinning with Driven Piles and Needle Beams

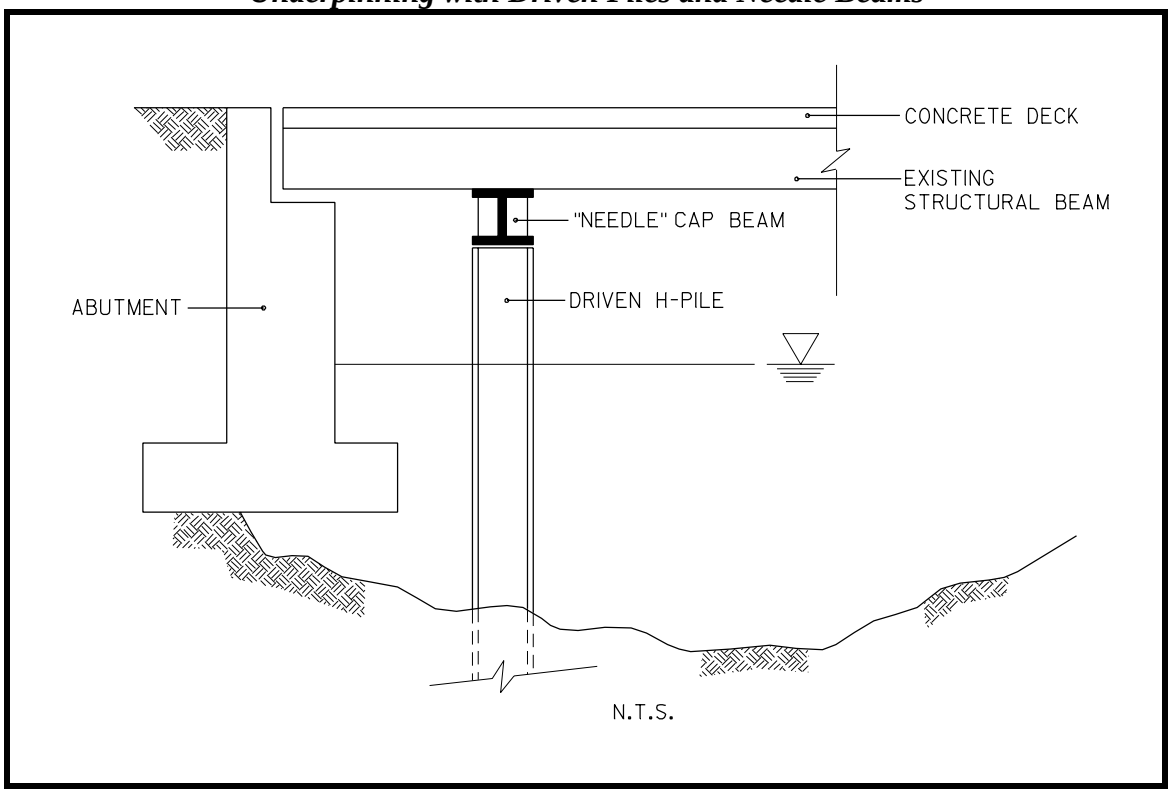

9.8.7.2 Structural Frames

When short-span structures settle, temporary support can be achieved using structural frames constructed over or under the spans. These frames can be used to temporarily raise the spans to their original elevation, or to "hold" the structure from further settlement or complete failure.

Support from the top. These structural frames consist of transverse or longitudinal beams that support a single or multiple stringers with hanger rods passing through the deck. The rods support saddles which "cradle" the stringers. Generally, traffic must be removed from the bridge. When longitudinal beams are used, single-lane traffic consisting of lightweight vehicles may be permitted. Refer to Figure 9-16.

Support from the bottom. This type of structural frame supports the span from below and is constructed on cribbing placed directly under the bridge. The cribbing serves to significantly reduce and distribute the load to the soil below. Often this method can be used to avoid a collapse until a permanent support can be constructed. Refer to Figure 9-17.

Jumper bridge. Another type of temporary structural frame consists of multiple beams that are placed longitudinally on top of an existing bridge but span beyond the bridge to create a "jumper" bridge. This method is temporary because it significantly raises the approach roadway to match the jumper bridge and may not be suitable for all locations. Traffic can be temporarily restored quickly with no effect on wetlands or in-stream construction. Refer to Figure 9-18.

9.8.7.3 Tie Backs and Deadmen

The use of tie backs and deadmen is suitable for stabilizing retaining walls and abutments where displacement is caused by overturning. The cause of the displacement must be known or determined before using this method. The method requires excavation behind the structure to place piles, deadmen, and tie rods. Traffic must be restricted until backfilling is completed. Refer to Figure 9-21.

9.8.8 UNDERDRAIN REPAIR

Underdrain systems installed during original construction may not perform for the life of the structure. Leaching water through cracks in abutments or retaining walls indicates that drains are not working properly. When underdrain systems fail, piping water beneath or around the substructure may cause erosion.

Correction of the drainage system failure requires removal of the old system and replacement with new pipe, filter fabric, open-graded stone and backfill.

9.8.9 SLOPE PAVING

The major cause of slope paving failure is poor drainage design resulting in undermining. The designer should determine the cause and provide for correcting the cause in addition to repair of the slope paving.

If the area of slope paving failure is small, in-kind repairs are made. If over 50 percent of the area must be repaired, the slope paving is replaced with riprap.

Figure 9-16
Structural Frames – Top Support

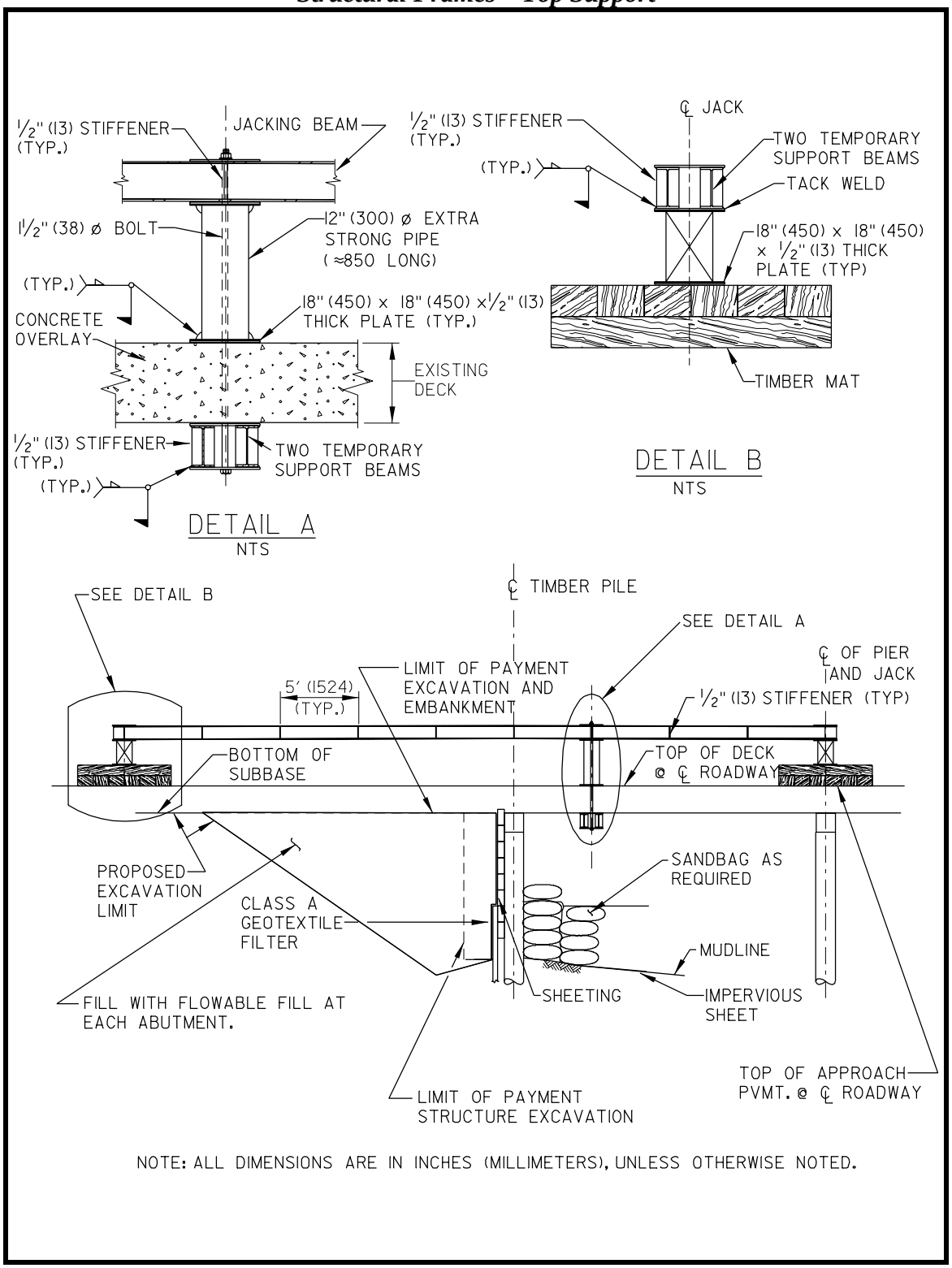

Figure 9-17
Structural Frames – Bottom Support

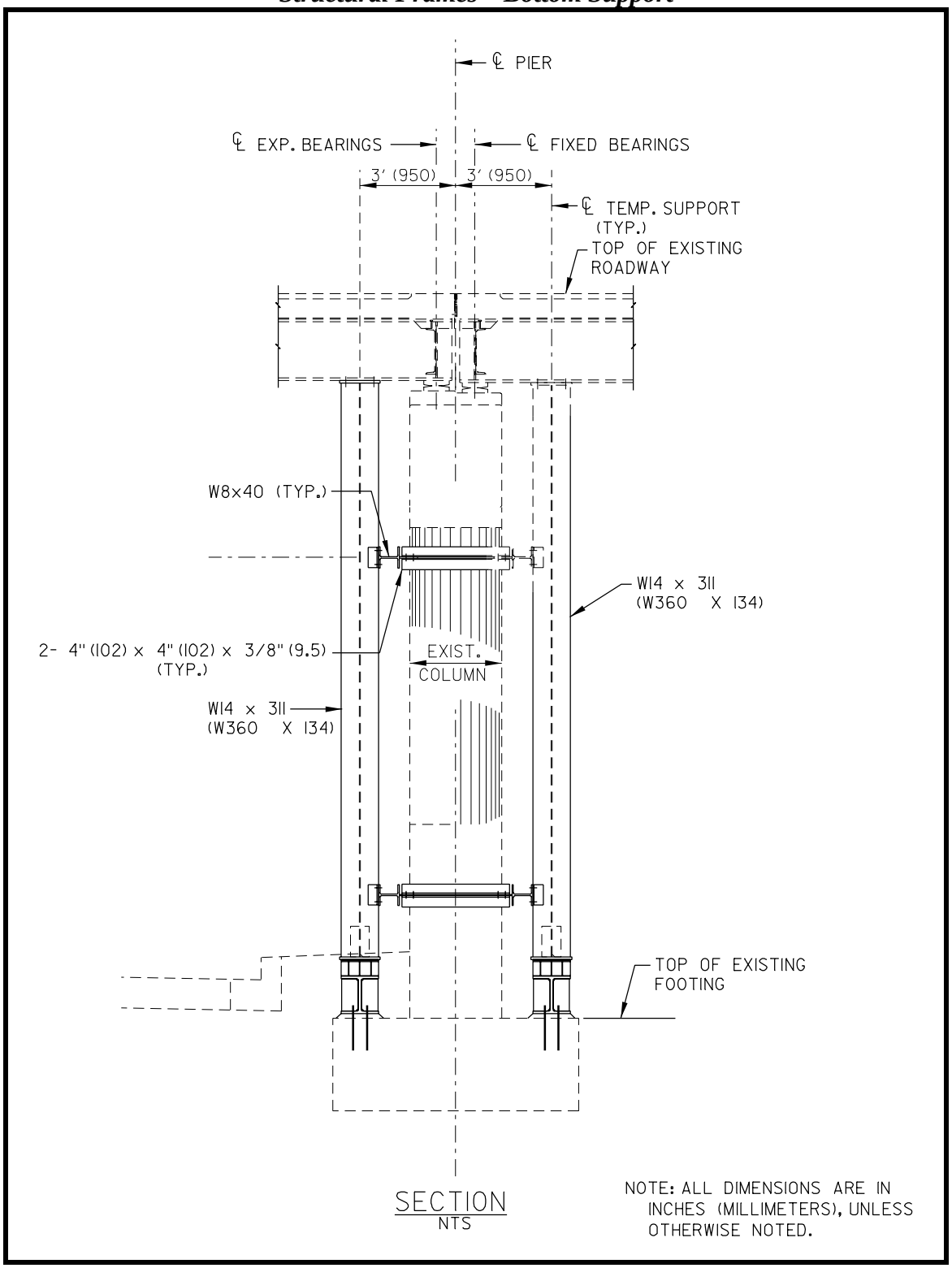

Figure 9-18
Jumper Bridge

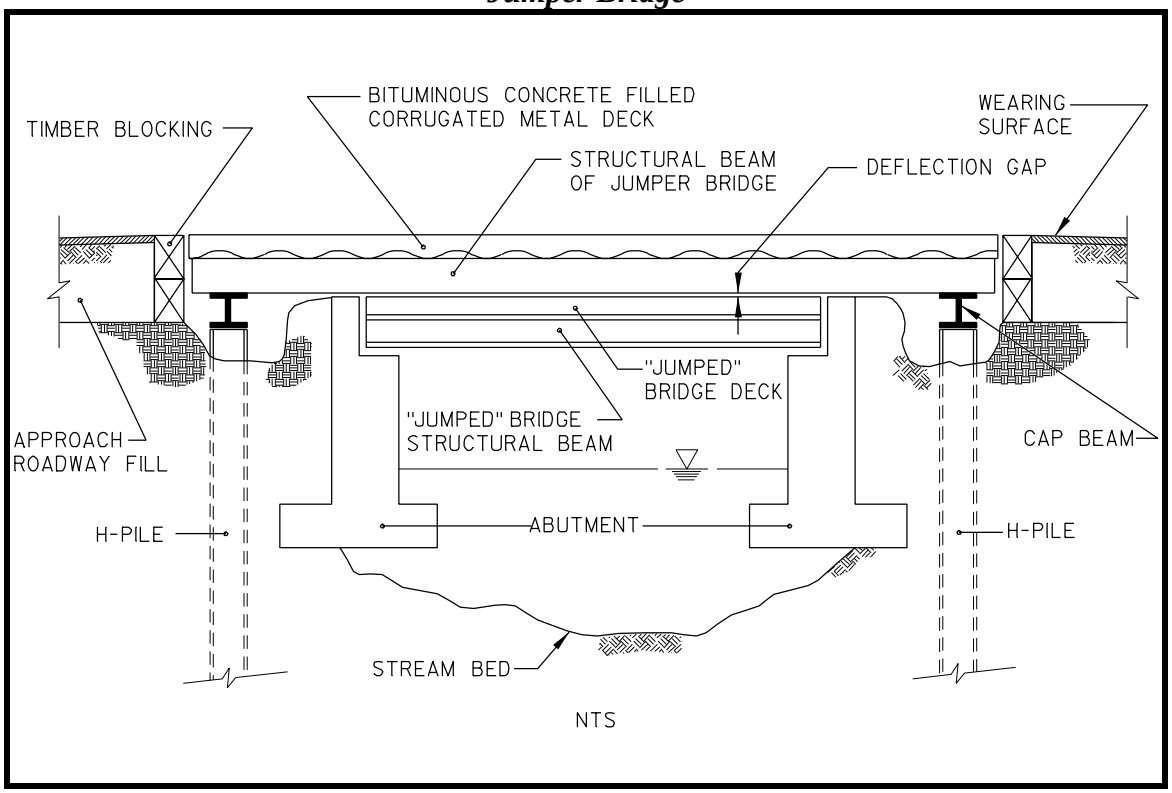

Figure 9-21
Tie Backs and Deadmen

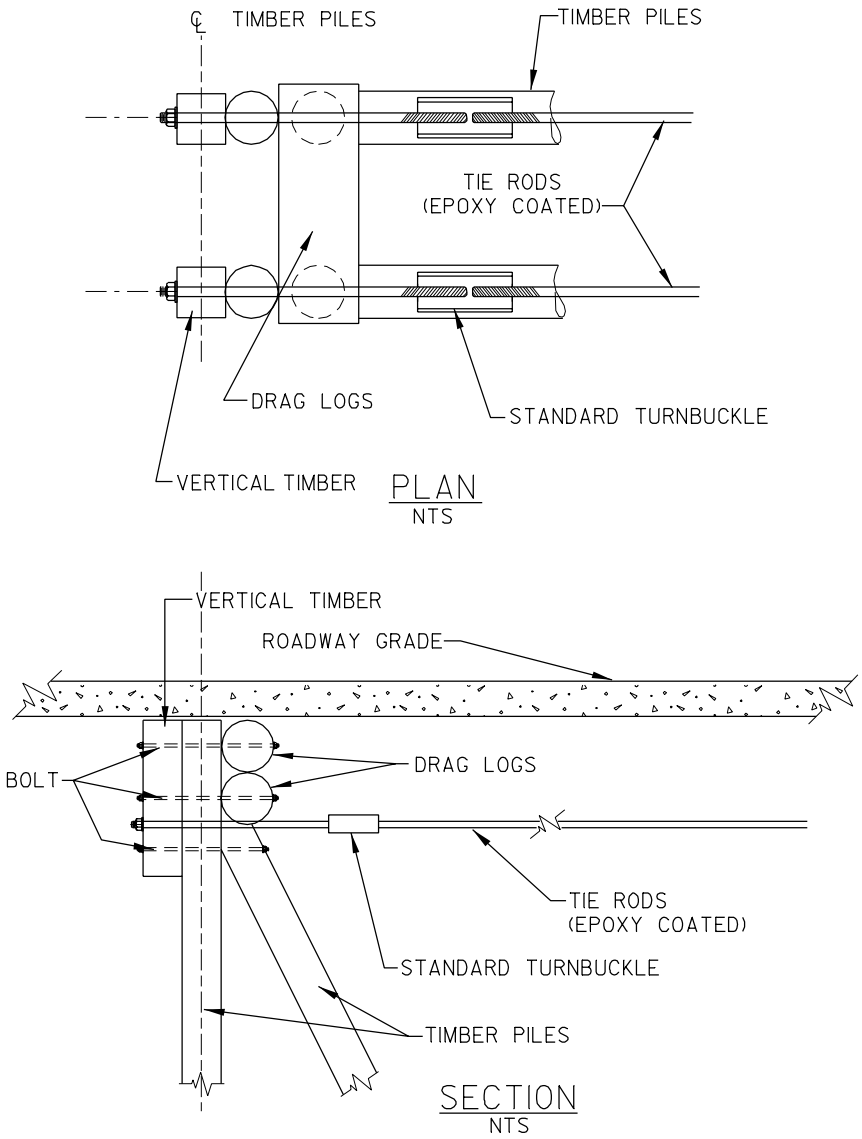

9.9 RETAINING WALLS

Most bridge structures are constructed with wingwalls to retain the roadway and embankments. Also, bridges with long approach embankments may require long walls. Generally, these retaining walls are constructed in one of the following configurations:

- reinforced concrete,
- proprietary such as mechanically stabilized earth (MSE) walls (VSL and Reinforced Earth),
- gravity walls,
- steel sheet piling (tied back and cantilever), and
- gabions.

Because of the differences in the ways they support embankments, each of these types requires special considerations for rehabilitation design.

9.9.1 REINFORCED CONCRETE

The designer should refer to Section 9.8.4 for repair and rehabilitation methods for reinforced concrete retaining walls. Generally, only repairs to the exposed face of the wall can be accomplished.

9.9.2 PROPRIETARY WALLS

Proprietary walls and their application in Delaware are relatively recent. The preferred approach of the Department is to emphasize excellent construction techniques and preventive measures to preclude future problems with MSE walls. The wall types most utilized are VSL and Reinforced Earth.

Reinforced or mechanically stabilized embankments include reinforcing elements such as straps, bars, welded wire mats, polymer grids, geosynthetics, and various anchor systems used to improve the mechanical properties of a large soil mass. Refer to *TRB Circular No. 444, Mechanically Stabilized Earth Walls*, dated May 1995.

Reinforced earth walls are designed and analyzed by considering the entire reinforced mass as a semi-rigid gravity retaining wall with active soil pressure applied behind the wall. The wall must be checked for conventional stability, including overturning, sliding, bearing capacity, and deep stability.

Failures of MSE walls have most recently been limited to failure of the mechanical attachment of the grid, bar, or strap to the facing panel. This failure allows local erosion and displacement of the fill and could cause loss of structural stability over time. Grouted tie-back anchors are used to stabilize and replace MSE wall panels.

The Department does not allow construction of spread-footing-type abutments on MSE embankments. Piles will be used to support the abutment.

In all cases, the manufacturers of MSE walls should be consulted during the development of any remedial repairs.

9.9.3 GRAVITY WALLS

Gravity walls are generally repaired or replaced in kind. Depending on the extent of deterioration, partial reconstruction may be required. With stone masonry gravity walls, repointing or grouting the joint mortar may be required to seal the face.

9.9.4 STEEL SHEET PILING

The primary failure of steel sheet pile walls is the deterioration of the protective

coating. Refer to Section 9.7.4.1 for cleaning and painting steel.

9.9.5 GABIONS

Gabions are stacked stone-filled wire baskets interconnected to form gravity-type retaining walls. Settlement is the primary cause of distress. Generally, significant settlement can be tolerated before reconstruction is necessary. Gabion walls are constructed using a 2:1 ratio of height to base width. Corrosion or failure of wire baskets can be repaired by retying the wire. Any displaced stones would be replaced before closing the baskets.

9.10 MAINTENANCE AND PROTECTION OF TRAFFIC

The primary consideration by the Department involving maintaining traffic is to evaluate possible total closure of a structure and detouring all traffic versus maintaining traffic on the bridge. This decision involves the following areas:

- detour availability and compatibility,
- average daily traffic (ADT),
- safety during construction,
- vehicular safety,
- public convenience,
- user costs, and
- construction costs.

Traffic may be detoured to a parallel bridge, if one is available. Detours of pedestrian traffic should also be considered in the project.

Other alternative options to a full detour of all traffic for an extended period include:

- a long-term detour of one direction of traffic while the opposite direction uses the existing structure,
- maintaining a reduced number of lanes on the existing structure, or
- maintaining reduced lane widths on the existing structure.

On a case-by-case basis, a temporary detour bridge may be constructed with the approval of the Bridge Design Engineer.

The designer should refer to the FHWA *Manual on Uniform Traffic Control Devices for Streets and Highways* (*MUTCD*) and the *Delaware Traffic Controls for Street and Highway Construction and Maintenance Operations Manual* for design of traffic control items.

9.11 UTILITIES

Any utilities on an existing bridge must be protected during rehabilitation. Planking or other protection must be provided to prevent damage from dropped items.

The designer should be aware of any utilities near the structure that may affect the contractor's operation during rehabilitation. For example, high-power electrical lines pose a hazard for crane operation.

Chapter Twelve

Computer Applications

12.1 INTRODUCTION

The Bridge and Project Development Sections share many of the same computer applications, utilizing common servers and maintaining a common project file database and graphic standards. The Quality Section and OIT are the lead sections in operating, maintaining, and administering common computer equipment and application practices of both sections. (For further information on computer applications and graphic standards, refer to the *Project Development Manual*.)

12.2 SOFTWARE APPLICATIONS

Computer applications assist in the design of highways and bridges by automating tasks and increasing productivity. All design work is produced in a CADD environment with a number of design software packages. Software ranges from graphics products for producing design plans, to structural analysis packages for the design of bridges. Designers must exercise engineering judgment when using computer applications. They must understand the physical principles involved, how their computer applications apply those principles, how to model the computer input, and how to interpret the computer output. Use of a computer program and its results does not relieve the engineer of full responsibility for the design.

12.2.1 SOFTWARE APPROVAL

The Bridge Design section maintains a list of software acceptable for use on Department bridge projects; however, the results of pre-approved software, and any others that may be approved in the future, shall only be used for analysis and design when:

- All computer work is under the direct supervision of an experienced engineer familiar with computer techniques.
- The designer assumes responsibility for the logic and results of the program.

Software that is not on the Department's approved list should not be used in design calculations or plan preparation unless approved for use by the Bridge Design Engineer. To obtain approval for use of other software design programs, documentation of the computer programs shall be submitted to the Department for approval. This submission shall include information which would be required by an engineer to determine what methods were used in the solution of the problem and what assumptions were used in the calculations. The submission should include the following as a minimum:

- A description of the program, explaining exactly what it does, what options are

available, and what methods are used. Submission of a flow diagram is recommended.

- The input required by the program, including a description of each value, an input form (if one is used), and sample input.
- The program output, including a complete description of each value, any keys used in interpreting the output, and sample output from the sample input.
- Any constants or parameters used in the program.
- An explanation of how the program was checked, including a copy of computations relative to test.

Approval only allows the designer to include computer input and output in the design calculations. It does not relieve the designer of responsibility for assuring that the program is satisfactory for the intended use and performing properly. No further approval is required for any program unless modifications are made to the program logic. When computer output is included in a set of computations for submission, a copy of the input necessary to interpret the data should also be included.

Documentation for previously approved programs need not be submitted for each new project. However, the designer shall include a letter indicating which version of each program was used in the project, along with the date of the prior approval.

A program that can be used for generating the Reinforcing Bar List sheets in MicroStation for the construction plans is available from the Bridge Design section.

12.3 COMMON STANDARDS

Common computer applications software standards utilized by both Project Development and Bridge Design are contained in the DelDOT Project Development Manual. They include:

- graphic standards;
- seed files;
- drafting software;
- survey software;
- roadway design software;
- plotting standards;
- design visualization software;
- common raster imaging software;
- traffic analysis software;
- project management.

12.4 COMPUTER FILE ADMINISTRATION

12.4.1 FILE MANAGEMENT

A file management system has been implemented at DelDOT to manage the location, access, distribution, backup, and archiving of data critical to the Department's design and maintenance programs. File naming conventions and file management procedures shall conform to DelDOT standards.

12.4.2 AS-BUILT PLANS

The procedure for preparation of as-built plans shall be as directed Chapter 13 of this manual.

12.4.3 ARCHIVES

Records of Bridge Design Projects shall be maintained in accordance with the

Department's *Policy Implement A-30, Records Management Policy*.

12.4.4 CONSULTANT CADD REQUIREMENTS

Electronic file copies usually improve efficiency in organization and archiving. For this reason, the Bridge Design Section is transitioning to a requirement that consultants provide electronic versions of everything they produce.

For each plan submission, consultants shall, at a minimum, provide the Department with one set of full-size paper copies of the plans and an electronic copy of the cal files that can be used for mass reproduction of the plans for review and comment.

When the project is complete, consultants shall provide copies of the final dgn files, and digital terrain model (DTM). As-built information provided by the District shall be transferred to the electronic version of the plans by the design consultant, and cal files shall be prepared and provided to the Department for final archiving.

Consultants shall also provide an electronic copy of all reports that they prepare. Reports shall be prepared using MS Word.

12.5 MISCELLANEOUS RESOURCES

Various other sections of the Department maintain computer applications used by bridge designers and provide support services. Some of these are listed below.

12.5.1 OFFICE OF INFORMATION TECHNOLOGY (OIT)

OIT is charged with providing information and computer support to the Department. OIT is responsible for day-to-day technical support for all users within the Department and maintains computer operations seven days a week.

12.5.2 SPECIAL PROVISIONS

Special Provisions may be needed on projects for non-standard items. Existing special provisions are sometimes modified and completely new ones may be created. Designers involved in writing special provisions should refer to the latest copy of the DelDOT's *Format for Special Provisions File Requirements* from the Specifications Engineer. Numerous versions of special provisions may be available.

12.5.3 PLANNING

Planning is charged with Mapping and Geographic Information Systems. These are used for a variety of purposes, including:

- Assessment of land use and projected growth
- Traffic count information
- Accident history
- Infrastructure inventories

12.5.3.1 Mapping

Mapping provides cartography, and produces and updates the state road maps. These maps are used by designers to study the roadway system's geographic features and existing and future development. Maps can be accessed electronically.

12.5.3.1.1 Geographic Information System (GIS) INFORM

INFORM provides information such as accident history, traffic counts, bridge location, aerial photography, and other information. It ties electronic mapping and database applications together.

Chapter Thirteen

Construction Coordination

13.1 INTRODUCTION

Design Project Managers and Construction Group personnel work closely from project initiation through final inspection. Coordination between the staffs of these sections of the Department is key to successful project completion.

The focus of this chapter is on construction coordination, specifically coordination and support requirements between Design Project Managers and Construction Group personnel during construction. Use of the title "Design Project Manager" is a generic reference to Transportation Solutions Section Heads, Project Managers, and/or Squad Leaders who manage bridge projects. Design Project Managers usually direct Project Engineers, support staff, and/or consultants to carry out some or all of these tasks.

Coordination between Construction Group personnel and the Bridge Design Section during project initiation and design is covered in Chapter Two.

13.2 DELDOT CONSTRUCTION

Responsibilities of the Construction Group include administration of construction contracts, implementation of quality assurance programs, and others. In this section we will discuss some of the responsibilities and organization of the design and construction sections within Transportation Solutions. Only those activities that require regular construction coordination between Design Project Managers and Construction personnel have been included in this chapter.

13.2.1 CONSTRUCTION GROUP

The Construction Group is currently divided into two regions: North and South. Each region is further subdivided into two groups. Construction is responsible for project implementation. Below is a list of the various personnel in the Construction Group that Design Project Managers coordinate with during construction, along with their typical duties.

Assistant Director, Construction - An Assistant Director heads up each construction region. The Assistant Director leads the Construction Section and is responsible for all new construction and rehabilitation projects carried out in the region. Responsibilities include the overall management, coordination, implementation, and timely completion of projects. Included in these responsibilities are quality assurance, acceptance, and payment for projects by the Department.

Group Engineer – Group Engineers oversee construction projects within their group and report directly to the Assistant Director.

Area Engineer - One or more Area Engineers may be assigned to each group, who reports directly to the Construction Engineer. The Area Engineer is responsible for management of projects assigned to him or her by the Construction Engineer. The Area Engineer insures that projects are constructed in accordance with the plans and specifications. The Area Engineer coordinates the payment of funds to the contractor for work completed. The Area Engineer directs the activities of Construction Inspectors and prepares change orders.

Construction Inspector - The Construction Inspector is the Department's on-site representative for each project and reports directly to either an Area Engineer or Resident Engineer. Depending on project complexity, a Resident Engineer may be appointed who manages a staff of inspectors. Inspectors insure quality of work and verify contractor payment requests.

Construction Inspectors typically are not authorized to approve changes to the plans. Construction Inspectors will alert the Area Engineer or Construction Engineer of any changes or unforeseen conditions that arise. The Construction Engineer, Construction Inspector, and Design Project Manager may coordinate directly.

13.3 MATERIALS AND RESEARCH SECTION

The Materials and Research (M&R) Section has statewide responsibilities for supporting the various construction sections with quality assurance.

M&R is responsible for ensuring that materials and fabricated items brought on site for use in the project meet requirements of the specifications. M&R ensures product quality by assigning inspectors to various plants that supply material. These include concrete plants, asphalt plants, steel fabricators, pre-cast concrete plants, and others. M&R also conducts on-site testing of aggregates and soils to ensure compaction levels and takes on-site samples of material deliveries back to the lab for quality assurance analysis.

13.4 DESIGN

The Design Division includes the Quality and Design Support sections. These sections include the following:

- **The Sediment and Stormwater Management Group** reviews and approves every project during design and construction for compliance with Delaware Code pertaining to erosion, sediment control, and stormwater management. They operate under the authority of a Memorandum of Agreement (MOA) between the Department of Natural Resources and Environmental Control and the Department of Transportation.
- **The Construction and Maintenance Technology (CONTECH) group** conducts quality assurance inspections of construction and maintenance contracts from an administrative standpoint. The CONTECH group researches and provides training on new methods, procedures, and specifications; coordinates modification of existing specifications to achieve better products, and provides feedback to Project Development on design issues

arising during construction. Once construction projects are completed, the CONTECH Group conducts final inspections.

13.5 SAFETY SECTION

The Safety Section is responsible for review and approval of Maintenance of Traffic (MOT) control plans. The section insures that plans are prepared in accordance with the DelDOT *Traffic Controls* manual and are responsible for publishing and updating the manual.

The Safety Section must approve changes to Design MOT plans proposed during construction. The section also performs field inspections of MOT to assess operational safety concerns and require changes be made if necessary.

13.6 DELDOT CONSTRUCTION MANUAL

The DelDOT *Construction Manual* is an important reference tool. Design Project Managers should refer to this manual for standard practices for contract administration, and typical construction methods.

13.7 STANDARD SPECIFICATIONS

DelDOT *Standard Specifications* are an integral part of every construction bid package and should be adhered to unless superseded by another contract document.

Standard Specifications contain standard information used for most projects including construction materials, measurements and payment. Design Project Managers and construction personnel must be familiar with the requirements and procedures of the *Standard Specifications*.

13.8 NEW PRODUCT EVALUATION

Occasionally, new products are identified that may have the potential to improve current methods and or reduce cost. These products should be referred to M&R Section for review prior to their acceptance and use. Contractors, manufacturers, suppliers, consultants, or Department personnel may request evaluation.

13.9 CONSTRUCTION SUPPORT

Project handoff typically takes place at the time of contract award. During project handoff, primary responsibility for project administration transfers from Project Development to Construction. However, implementing the project is still a team effort, with nearly every division of the Department still involved. The Design Project Manager continues to be involved by assisting with:

- Plan clarifications and intent
- Plan changes
- Unforeseen conditions
- Approval of shop and working drawings

13.9.1 PRECONSTRUCTION MEETING

Design Project Managers should attend the Preconstruction meeting. The Construction Engineer or Area Engineer typically runs the Preconstruction meeting. This is an important meeting, which gets the project started. Design Project Managers

attending the Preconstruction meeting should be familiar with the plans and specifications so they can answer questions that arise, or take notes to reply to questions at a later date.

Any change to the Department's typical lines of communication should be discussed and agreed to during this meeting.

13.9.2 KEY CONSTRUCTION ACTIVITY MEETINGS

Numerous scheduled and unscheduled meetings typically take place during the course of construction. Design Project Managers should attend these meetings when requested by construction personnel. Typical meetings that Design Project Managers attend are test pile driving, pre-deck pour, and semi-final inspection. When requested, they may also assess unforeseen conditions, assess plan conflicts, or answer questions in plan interpretation.

13.9.3 TEST PILE DRIVING

Foundation design is based on on-site testing and generally accepted principles of geotechnical engineering. These provide the basis for design of foundations, but soil properties still need to be verified during construction. During pile design, Design Project Managers face an additional unknown concerning the type of equipment the contractor will use to drive piles. Per the Department's test pile specification, contractors must submit a wave equation analysis based on their chosen driving equipment to the district for approval before driving. Construction provides the wave equation to the Design Project Manager for review and approval. Immediately after pile driving, Construction provides the Design Project Manager with the pile driving record and dynamic analysis results for approval. Design Project Managers use this information for approval of driving criteria and production pile order length.

13.9.4 PRE-DECK POUR MEETING

The Design Project Manager attends the pre-deck pour meeting. The pre-deck pour meeting serves to review the Contractor's plan to place the deck. Important points to discuss are the planned placement rate, location, sequencing of the pour, and the ability of the contractor to keep the mix plastic until completion of the pour. Contingency plans should be discussed pertaining to where the contractor should stop the pour if he or she falls behind in his placement rate, has equipment problems, or encounters inclement weather. Detailed requirements for the placement of concrete bridge decks is contained in DelDOT Standard Specifications Section 602.20.

13.9.5 SEMI-FINAL INSPECTION

Design Project Managers should attend this meeting to assist in reviewing the nearly completed project. During this meeting, final items that the contractor needs to address are listed.

13.9.6 UNFORESEEN OR CHANGED CONDITIONS

Design Project Managers should be contacted immediately whenever conditions in the field do not match those shown on the plans. These include environmental, physical, material, or structural conditions that may arise. Design Project Managers will assist in assessing the condition and direct changes that may be required.

13.9.7 CONSULTANT CONSTRUCTION SUPPORT

Consultants who prepare design plans are typically retained to assist during construction. A separate contract between the Department and consultant for construction services should be prepared for this purpose. Typical assistance consultants provide during construction include:

- Attendance and support at pre-bid and preconstruction meetings.
- Assistance in plan interpretation.
- Review of working drawings.
- Preparation of plan revisions.
- Analysis and recommendations of unforeseen conditions.

Occasionally, consultants also provide more extensive construction support such as:

- On-call assistance with construction inspection and acceptance.
- Review of contractor plan change proposals.
- Attendance and support at progress meetings and/or public meetings.

Consultant assistance needs to be provided in a timely manner to ensure that the project is not delayed and that the Department is responsive to the contractor.

13.9.8 AS-BUILT PLANS

During construction, not all details of the design plans may be followed exactly. Reasons for plan changes may be unforeseen or changed conditions in the field, plan revisions, value engineering proposals, deleted work, construction errors, etc.

As-builts are master sets of plans initially created and maintained by the inspection staff during construction. As changes occur, this set of plans is updated to reflect the actual as-built condition. Once the project is completed, the as-builts are forwarded back to the Design Project Manager. The Design Project Manager or his representative transfers as-built information onto the Department's file copies of the plans, which are then archived to serve as a permanent record of the bridge.

Marking as-builts is done in red in the field and later transferred to the electronic version of the plans. Once all as-built information is transferred to the electronic version of the plans, a final raster image of the plans is created (typically cal files). These files are then archived for future reference in the Department's database.

13.10 CONTRACTOR SUBMISSIONS

Contractors must make material and working drawing submissions as required by Section 100 of the Standard Specifications. A working drawing submittal process flow chart is shown in the Standard Specifications, which indicates the flow of working drawings, number of copies required, and time limit for review. In some cases, the construction group may revise the standard submission flow to accelerate the project.

In most cases, the Designer will not communicate directly with the contractor; however, there are exceptions when direct communication between the contractor and Designer is in the best interest of the Department. Designers should normally communicate with the contractor either through or in the presence of construction group personnel. Direct communication between the Designer and contractor shall only take place when authorized by the

construction group. When the construction group is not a party to direct communication between the Designer and contractor, the Designer must provide the construction group with a summary of the discussion.

13.10.1 WORKING DRAWING SUBMISSIONS

Designers are responsible for ensuring that working drawing submittals are in general conformity with the plans and specifications. Designers check to ensure that member sizes are accurate and do a cursory check of structural calculations. In some cases, contractors submit recommended changes to the plans due to constructability or material availability, which Designers must assess. Designers write comments on all copies of submissions in red and return them to the construction group. Designers stamp submissions in accordance with the Standard Specifications Section 100. One copy of stamped submissions is kept in the Bridge Design files.

Some working drawings include structural materials to be fabricated. Once approved by the Designer, the required number of stamped copies of these plans shall be forwarded to the Materials and Research Engineer and the remainder sent back to the construction group. The Materials and Research Engineer then arranges for shop inspection of fabricated members.

Designers shall make review of contractor submissions a high priority, insuring that these submissions are reviewed and returned to the construction group as soon as possible but in no more than 30 days.

When a submission is not approved, the Designer should immediately alert construction group personnel, since this may affect the construction schedule. Designers should avoid the following:

- Making major changes to contractor submissions because this tends to decrease the contractor's responsibility.
- Making changes that are inconsistent with the contract documents.

When Designers make changes to a submission, the construction group should be informed so that the change can be quickly coordinated with the Contractor.

13.10.2 MATERIAL SUBMISSIONS

Product-specific submissions, including concrete mix designs, are forwarded directly from the construction group to the Materials and Research Engineer for review. Designers do not stamp these submissions. If a materials submission is mistakenly sent to the Designer, it should be forwarded to the Materials and Research Engineer.

In all cases, the construction group Engineer shall be copied on submission transmittals and correspondence initiated by the Designer.

13.11 PLAN CHANGES

Occasionally, contract requirements may have to be changed during construction for reasons including the following:

- Unforeseen physical conditions
- Existing structures not built per original plans
- Structural condition differing from those in inspection reports.
- Features missed during survey
- Utility conflicts

- Subsurface irregularities
- Political requests

Depending on the extent and complexity of the change, a plan revision or field change may be required. All change orders shall be reviewed and approved by the Designer. Situations involving structural changes, public safety, and/or more complex problems are referred from the construction group to the Design Project Manager. Design Project Managers should consult with construction group personnel before making a final decision related to plan changes.

13.11.1 PLAN REVISIONS

Plan revisions are required for any changes to the plan, profile, or features of the project.

Design Project Managers will take the lead in obtaining approval for the change and preparing plan revisions. Before implementing changes, the Design Project Manager should contact the Finance Section to discuss the change and verify whether funding is available.

Design Project Managers will make revisions to appropriate sheets of the plans along with computation of new quantities. Design Project Managers should coordinate with the construction group on the required number of sheets to forward. Design Project Managers will send written justification to Finance indicating the changes required and requesting any increase or decrease in funding.

Plan revisions shall be marked on the plans as indicated in the CADD Manual.

13.11.2 FIELD CHANGES

Field changes are relatively minor changes in which a plan revision is not required. In most cases the construction group will coordinate field changes with the Design Project Manager. The construction group is responsible for coordinating any funding needs with Finance. The changes made will be marked on the as-built plans.

13.11.3 COST ANALYSIS

Changes to project plans may require a cost analysis to be performed if the scope and complexity of the work has changed and is not representative of the contract price. When requested by the construction group, Design Project Managers will perform a cost analysis for use in determining a fair price for the work required.

Typically, the construction group also negotiates with the contractor on the price for additional work. When the contractor and Design Project Manager's estimated costs vary considerably, the construction group will continue to negotiate with the contractor and, if necessary, pay for the work by force account.

13.11.4 CONSTRUCTION CLAIMS

Design Project Managers may be asked to support the construction group in construction claim hearings held with the contractor. For this reason, the Design Project Manager shall insure that accurate records are kept to enable fair evaluation of the claim.

Appendix A
Design References

A.1 INTRODUCTION

General references used by the Department for the design, construction, rating, and evaluation of bridges and structures are listed below. References necessary for specific design procedures are presented in each chapter, as appropriate. Use the most current edition of each publication. These references should not be construed as design specifications. This list, although comprehensive, should not be construed as all-inclusive.

A.2 DESIGN REFERENCES

American Association of State Highway and Transportation Officials (AASHTO)
http://www.transportation.org/aashto/home.nsf/FrontPage

- *AASHTO/AGC/ARTBA Guide Specifications for Concrete Overlays of Pavements and Bridge Decks*
- *AASHTO Guide Specifications for Highway Bridge Fabrication with HPS70W Steel*
- *AASHTO Guide Specifications–Thermal Effects in Concrete Bridge Superstructures*
- *AASHTO LRFD Bridge Construction Specifications*
- *AASHTO LRFD Bridge Design Specifications (AASHTO Specifications)*
- *A Guide for Protective Screening of Overpass Structures*
- *ANSI/AASHTO/AWS Bridge Welding Code D1.5 and Commentary*
- *A Policy on Geometric Design of Highways and Streets (Green Book)*
- *Construction Handbook for Bridge Temporary Works*
- *Corrosion Protection of Steel Hardware Used in Modern Timber Bridges*
- *Design, Construction and Quality Control Guidelines for Stress Laminated Timber Bridge Decks*
- *Foundation Investigation Manual*
- *Guide Design Specifications for Bridge Temporary Works*
- *Guide Specifications and Commentary for Vessel Collision Design of Highway Bridges*
- *Guide Specifications for Alternate Load Factor Design Procedure for Steel Beam Bridges Using Braced Compact Sections*
- *Guide Specifications for Aluminum Highway Bridges*
- *Guide Specifications for Bridge Railings*
- *Guide Specifications for Design and Construction of Segmental Concrete Bridges*
- *Guide Specifications for Distribution of Loads for Highway Bridges*
- *Guide Specifications for Fatigue Design of Steel Bridges*
- *Guide Specifications for Fatigue Evaluation of Existing Steel Bridges*
- *Guide Specifications for Fracture Critical Non-Redundant Steel Bridge Members*

- *Guide Specifications for Horizontally Curved Highway Bridges*
- *Guide Specifications for Seismic Isolation Design*
- *Guide Specifications for Strength Design of Truss Bridges (Load Factor Design)*
- *Guide Specifications for Strength Evaluation of Existing Steel and Concrete Bridges*
- *Guide Specifications for Structural Design of Sound Barriers*
- *Guide Specifications for the Design of Stress-Laminated Wood Decks*
- *Highway Drainage Guidelines, Volumes I through VIII*
- *Manual for Condition Evaluation of Bridges*
- *Manual for Corrosion Protection of Concrete Components in Bridges*
- *Manual for Maintenance Inspection of Bridges*
- *Manual on Subsurface Investigations*
- *Movable Bridge Inspection, Evaluation and Maintenance Manual*
- *Roadside Design Guide*
- *Standard Specifications for Highway Bridges*
- *Standard Specifications for Movable Highway Bridges*
- *Standard Specifications for Structural Supports for Highway Signs, Luminaires and Traffic Signals*
- *Standard Specifications for Transportation Materials and Methods of Sampling and Testing–Part I, Specifications*
- *Standard Specifications for Transportation Materials and Methods of Sampling and Testing–Part II, Methods of Sampling and Testing*

American Concrete Institute (ACI)
http://www.aci-int.org/general/home.asp

- *Recommendations for Design, Manufacture and Installation of Concrete Piles, ACI-543*

American Forest and Paper Association - American Wood Council
http://www.awc.org/index.html

- *National Design Specification (NDS) for Wood Construction, ANSI/AF&PA NDS*

American Institute of Steel Construction (AISC)
http://www.aisc.org/

- *Manual of Steel Construction*
- *Moment, Shears, and Reactions for Continuous Highway Bridges*
- *Sheet Piling Design Manual*
- *Wrought Iron and Steel Beams and Columns, 1873-1952*, Herbert W. Ferris

American Institute of Timber Construction
http://www.aitc-glulam.org/

- *Timber Construction Manual*

American Railway Engineering and Maintenance-of-Way Association (AREMA)
http://www.arema.org

- *Manual for Railway Engineering, Volume I*

American Society for Testing Materials (ASTM)
http://www.astm.org

DelDOT follows the AASHTO *Standard Specifications for Transportation Materials and Methods of Sampling and Testing–Parts I* and *II* insofar as possible. Where appropriate specifications or tests are not covered in these two AASHTO publications, the *Annual Book of ASTM Standards* is used. Each section of the standards contains specifications and testing requirements for material in that section. The construction section includes testing of concrete, aggregates, road and paving materials, as well as other building

materials. Other sections that may be helpful include:

- iron and steel products;
- nonferrous metal products;
- metals test methods and analytical procedures; and
- paints and related coatings.

Delaware Department of Transportation (DelDOT)

Some of these publications are available from DelDOT's web site at:
http://www.deldot.net/static/publications_forms.html

- *Bridge Maintenance Manual*
- *Bridge Management Manual*
- *CADD Standards*
- *Construction Manual*
- *Delaware's Historic Bridges: Survey and Evaluation of Historic Bridges with Historic Contexts for Highways and Railroads*
- *Materials Manual*
- *Policy Implements*
- *Professional Services Procurement Manual*
- *Project Development Manual*
- *Right-of-Way Manual*
- *Road Design Manual*
- *Standard Construction Details*
- *Standard Specifications for Road and Bridge Construction* (*Standard Specifications*)
- *Supplemental Specifications*
- *Traffic Calming Design Manual*
- *Traffic Controls for Street and Highway Construction and Maintenance Operations*
- *Traffic Summary*
- *Utilities Design Manual*

Department of Natural Resources and Environmental Control (DNREC)
http://www.dnrec.state.de.us

- *Delaware Erosion and Sediment Control Handbook*
- *Sedimentation Control Manual*

Federal Emergency Management Administration (FEMA)
http://www.fema.gov/

- *Procedures for Coordinating Highway Encroachments on Floodplains with Federal Emergency Management Agency*

Federal Highway Administration (FHWA)
http://www.fhwa.dot.gov/

- *Bridge Inspector's Reference Manual, FHWA NHI 03-001*
- *Bridge Maintenance Training Manual, FHWA-HI-94-034*
- *Bridge Waterways Analysis Model: Research Report, Report No. RD-86/108*
- *DRIVEN, A Program for Determining Ultimate Vertical Static Pile Capacity, User's Manual, FHWA-SA-98-074*
- *Economical and Fatigue Resistant Steel Bridge Details, Publication FHWA-HI-90-043*
- *Fatigue Cracking of Steel Bridge Structures, Volume I, RD-89-166*
- *Fatigue Cracking of Steel Bridge Structures, Volume II, RD-89-167*
- *Fatigue Cracking of Steel Bridge Structures, Volume III, RD-89-168*
- *Flexibility in Highway Design*
- *Forum on Weathering Steel for Highway Structures: Summary Report, Publication No. FHWA-TS-89-016*
- *Geotextile Design and Construction Guidelines, FHWA-HI-90-001*
- *Highways in the River Environment, FHWA-HI-90-016*
- Hydraulic Design Series (HDS)
    - *HDS-1, Hydraulics of Bridge Waterways, Hydraulic Design Series 1*
    - *HDS-5, Hydraulic Design of Highway Culverts, Hydraulic Design Series No. 5, Report No. IP-85-15*

- Hydraulic Engineering Circulars (HEC)
  - *HEC-2, Water Surface Profiles, Hydraulic Engineering Circular No. 2*
  - *HEC-11, Design of Riprap Revetment, Hydraulic Engineering Circular No. 11*
  - *HEC-14, Hydraulic Design of Energy Dissipaters for Culverts and Channels*
  - *HEC-17, The Design of Encroachments of Flood Plains Using Risk Analysis, Hydraulic Engineering Circular No. 17*
  - *HEC-18, Scour at Bridges, Hydraulic Engineering Circular No. 18, FHWA-IP-90-017*
  - *HEC-19, Hydrology, Hydraulic Engineering Circular No. 19*
  - *HEC-20, Stream Stability at Highway Structures, Hydraulic Engineering Circular No. 20*
  - *HEC-21, Bridge Deck Drainage Systems, Hydraulic Engineering Circular No. 21*
  - *HEC-23, Bridge Scour and Stream Instability Countermeasures, Hydraulic Engineering Circular No. 23*
- Hydraulic Reports
  - HY-8, Culvert Analysis (Version 2.0), computer software
- *Manual on Design and Construction of Driven Pile Foundations, FHWA DP-66-1*
- *Manual on Uniform Traffic Control Devices* (MUTCD)
- *Mechanically Stabilized Earth Walls and Reinforced Soil Slopes: Design and Construction Guidelines, FHWA-SA-96-071*
- *Recording and Coding Guide for the Structure Inventory and Appraisal of the Nations Bridge s, Report No. FHWA-ED-89-044, OMB No. 2125-0501*
- *Scourability of Rock Formations*, FHWA Region 3 Memorandum
- *Standards, FHWA Mid-Atlantic States Structural Committee for Economical Fabrication*

New Castle County

- *Unified Development Code* http://www.co.new-castle.de.us/landuse/webdynamic/landUse11.asp

Post-Tensioning Institute (PTI)
http://www.post-tensioning.org/

- *Post-Tensioning Manual*
- *Recommendations for Stay Cable Design, Testing, and Installation*

Precast/Prestressed Concrete Institute (PCI)
http://www.pci.org/

- *Design Supplement to: Precast Prestressed Concrete, Short Span Bridges, Spans to 100 Feet*

Transportation Research Board (TRB)
http://www4.trb.org/trb/onlinepubs.nsf

TRB publishes numerous research reports each year. In addition to the National Cooperative Highway Research Program (NCHRP) reports, these publications include peer-reviewed research papers presented at the annual meeting. The *TRB Publications Catalog* is issued each year, with listings by category. Reports of most interest to designers are in the Design category, which includes the following:

- Highway and Facility Design;
- Pavement Design, Management, and Performance; and
- Bridges, Other Structures, and Hydraulics and Hydrology.

The NCHRP was established to provide a continuing program of highway research. It

is sponsored by member departments of AASHTO in cooperation with FHWA. NCHRP is administered by the Transportation Research Board of the National Academy of Sciences.

NCHRP has synthesis reports of highway practice which typically determine the state of the art for the state transportation departments, evaluate current procedures, and recommend procedures which best resolve problems. Syntheses in the bridge design area include design of bridge approaches, deck joints, durability of structures, designs to reduce maintenance, prefabricated bridge elements, shallow foundations, underwater inspection, distribution of wheel loads, bridge drainage systems, and pile foundation design.

Some TRB and NCHRP design references are:

- *Design of Pile Foundations, NCHRP Synthesis of Highway Practice 42*
- *Guidelines for Evaluation and Repair of Damaged Steel Bridge Members, NCHRP Report No. 271*
- *Mechanically Stabilized Earth Walls, TR Circular No. 444*

US Army Corps of Engineers
http://www.usace.army.mil/inet/usace-docs/

- *Acquisition of Lands Downstream from Spillways for Hydrologic Safety Purposes, ER 1110-2-1451*
- *Hydraulic Design of Spillways, EM 1110-2-1603*
- *Life Cycle Cost for Drainage Structures, Technical Report GL-88-2*
- *Structural Design and Evaluation of Outlet Works, EM 1110-2-2400*

United States Department of Agriculture
http://www.usda.gov/wps/portal/usdahome

- *Standard Plans for Crash-Tested Bridge Railings for Longitudinal Wood Decks*
- *Timber Bridges—Design, Construction, Inspection and Maintenance*

US Department of Agriculture, Natural Resources Conservation Service (NRCS)
http://www.nrcs.usda.gov/

- TR-20 Computer Program for Project Formulation Hydrology
- *Urban Hydrology for Small Watersheds, Technical Release 55 (TR-55)*
- *National Engineering Handbook*

US Geological Survey (USGS)
http://www.usgs.gov/

- *Technique for Estimating Magnitude and Frequency of Floods in Delaware*

Miscellaneous

- *Bridge Inspection and Rehabilitation, A Practical Guide*, Parsons Brinckerhoff
- COM624P-Laterally Loaded Pile Analysis Program for the Microcomputer, Version 2.0, FHWA-SA-91-048
- *Drilled Shaft Manual, Volume I-Construction Procedures and Design for Axial Loading, and Volume II-Structural Analysis and Design of Lateral Loading*
- *Foundations and Earth Structures, Design Manual DM 7.2*, Naval Facilities Engineering Command, Department of Navy
- *GRLWEAP: Wave Equation Analysis of Pile Driving, Volumes I through VI*, Goble Rausche Likins and Associates, Inc.
- *Pile Foundations*, Chellis, R.D., McGraw-Hill
- *Soils and Foundations Workshop Manual, Cheney, R.S., and Chassis, R.G.*
- *Steel Structures Painting Manual, Volume 1, "Good Painting Practice"*
- *Steel Structures Painting Manual, Volume 2, "Systems and Specifications"*