SCALE : NTS

INLET BOX SIZE		COVER SLAB SIZE (L X W)	DRAINAGE INLET TOP UNIT	INLET TOP UNIT REBAR LENGTH	INLET TOP UNIT LIMIT OF PAYMENT	INLET TOP UNIT BAR BENDING DIAGRAM	FRAME & GRATE (FOUND ON DETAIL D-5, SHEET 2)	MAXIMUM PIPE SIZE (SEE NOTE 1)		MAXIMUM HEIGHT (TO TOP OF BOX)
L	W							L	W	
17⅝"	11⅝"	NO COVER SLAB	TYPE 5 (FRAME & GRATE COMBO)	N/A	N/A	N/A	TYPE 5 (FRAME & GRATE COMBO)	N/A	N/A	4'-0"
24"	24"	NO COVER SLAB	TYPE 6 (FRAME & GRATE COMBO)	N/A	N/A	N/A	TYPE 6 (FRAME & GRATE COMBO)	15"	15"	4'-0"
34"	18"	NO COVER SLAB	TYPES A, C, D, & E (DETAIL D-5, SHEET 7)	79"	82"	S504 (DETAIL D-5, SHEET 7)	TYPES 1 THRU 4 GRATE STANDARD DRAINAGE INLET FRAME	24"	12"	11'-4"
34"	24"	NO COVER SLAB	TYPES A, B, C, D, & E (DETAIL D-5, SHEET 6)	79"	82"	S503 (DETAIL D-5, SHEET 6)	TYPES 1 THRU 4 GRATE STANDARD DRAINAGE INLET FRAME	24"	15"	11'-4"
48"	30"	60" x 42" (DETAIL D-5, SHEET 4)	TYPES A, B, C, D, & E (DETAIL D-5, SHEET 3)	93"	96"	S501 (DETAIL D-5, SHEET 6)	TYPES 1 THRU 4 GRATE STANDARD DRAINAGE INLET FRAME	36"	21"	11'-4"
48"	48"	60" x 60" (DETAIL D-5, SHEET 4)	TYPES A, B, C, D, & E (DETAIL D-5, SHEET 3)	93"	96"	S501 (DETAIL D-5, SHEET 3)	TYPES 1 THRU 4 GRATE STANDARD DRAINAGE INLET FRAME	36"	36"	11'-4"
66"	30"	78" x 42" (DETAIL D-4, SHEET 4)	TYPES A, B, C, D, & E (DETAIL D-5, SHEET 3)	111"	114"	S501 (DETAIL D-5, SHEET 3)	TYPES 1 THRU 4 GRATE STANDARD DRAINAGE INLET FRAME	48"	21"	11'-4"
66"	48"	78" x 60" (DETAIL D-5, SHEET 4)	TYPES A, B, C, D, & E (DETAIL D-5, SHEET 3)	111"	114"	S501 (DETAIL D-5, SHEET 3)	TYPES 1 THRU 4 GRATE STANDARD DRAINAGE INLET FRAME	48"	36"	11'-4"
66"	66"	78" x 78" (DETAIL D-5, SHEET 4)	TYPES A, B, C, D, & E (DETAIL D-5, SHEET 3)	111"	114"	S501 (DETAIL D-5, SHEET 3)	TYPES 1 THRU 4 GRATE STANDARD DRAINAGE INLET FRAME	48"	48"	11'-4"
72"	24"	84" x 36" DETAIL D-5, SHEET 5)	TYPES A, B, C, D, & E (DETAIL D-5, SHEET 3)	117"	120"	S502 (DETAIL D-5, SHEET 5)	TYPES 1 THRU 4 GRATE STANDARD DRAINAGE INLET FRAME	54"	15"	11'-4"
72"	48"	84" x 60" (DETAIL D-5, SHEET 5)	TYPES A, B, C, D, & E (DETAIL D-5, SHEET 3)	117"	120"	S502 (DETAIL D-5, SHEET 5)	TYPES 1 THRU 4 GRATE STANDARD DRAINAGE INLET FRAME	54"	36"	11'-4"
72"	72"	84" x 84" (DETAIL D-5, SHEET 5)	TYPES A, B, C, D, & E (DETAIL D-5, SHEET 3)	117"	120"	S502 (DETAIL D-5, SHEET 5)	TYPES 1 THRU 4 GRATE STANDARD DRAINAGE INLET FRAME	54"	54"	11'-4"

NOTES :

1). MAXIMUM PIPE SIZES ARE CALCULATED USING REINFORCED CONCRETE PIPE PERPENDICULAR TO THE BOX WALL. FOR OTHER PIPE SIZES, TYPES AND SKEW ANGLES OTHER THAN PERPENDICULAR, SEE CHART ON DELDOT DESIGN RESOURCE CENTER.

2). STEPS ARE REQUIRED ON ALL BOXES WHOSE DEPTH IS GREATER THAN 4'-0" (1219).

3). SEE DETAIL D-4 OR APPROPRIATE DETAIL SHEET FOR ADDITIONAL NOTES.

DELAWARE
DEPARTMENT OF TRANSPORTATION

DRAINAGE INLET REFERENCE SHEET

STANDARD NO. D-R (2012) SHT. 1 OF 1

APPROVED SIGNATURE ON FILE (CHIEF ENGINEER) 01/07/2013 (DATE)

RECOMMENDED SIGNATURE ON FILE (DESIGN ENGINEER) 12/20/2012 (DATE)

12/4/2012

SCALE : N.T.S.

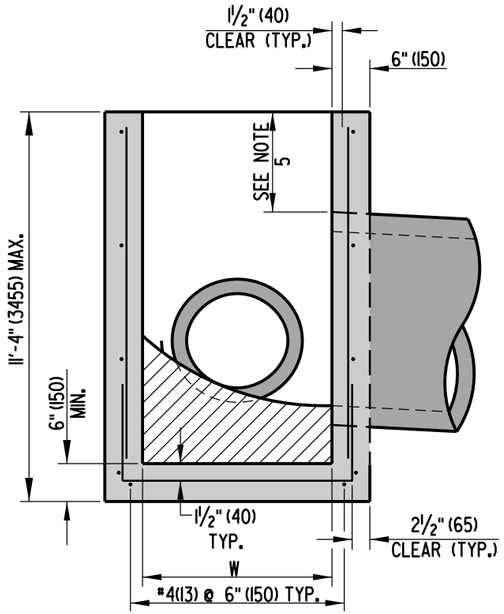

SECTION A-A

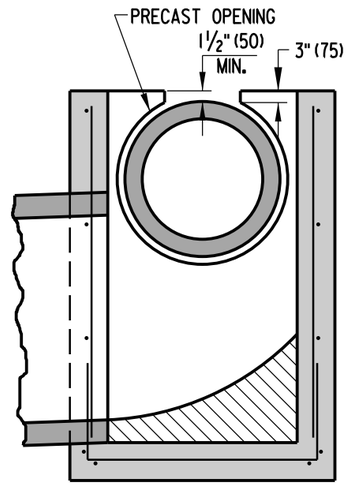

OPTIONAL PIPE OPENING DETAIL

SEE NOTE 5

INLET BOX SCHEDULE			
L	W	FABRICATION TOLERANCE	
17⅝" (450)	11⅝" (295)	+1" (25)	*
24" (610)	24" (610)	+1" (25)	*
34" (865)	18" (455)	-1" (25)	
34" (865)	24" (610)	-1" (25)	
48" (1220)	30" (760)	+6" (150)	
48" (1220)	48" (1220)	+6" (150)	
66" (1675)	30" (760)	+6" (150)	
66" (1675)	48" (1220)	+6" (150)	
66" (1675)	66" (1675)	+6" (150)	
72" (1830)	24" (610)	-1" (25)	
72" (1830)	48" (1220)	-1" (25)	
72" (1830)	72" (1830)	-1" (25)	

* - THESE BOXES ARE TO BE USED FOR LAWN INLETS AND ARE NOT INTENDED TO BE USED IN THE TRAVELWAY. THE MAX DEPTH FOR THESE BOXES IS 4' (1220). SEE NOTE 8 FOR REINFORCEMENT.

WALL REINFORCEMENT SCHEDULE		
INTERIOR WALL DIMENSION	AREA OF HORIZONTAL REINFORCEMENT PER FOOT (mm^2)	AREA OF VERTICAL REINFORCEMENT PER FOOT (mm^2)
	IN^2 (mm^2)	IN^2 (mm^2)
LESS THAN 4' (1220)	0.132 (85)	0.132 (85)
4' (1220) TO 4.5' (1370)	0.163 (105)	0.132 (85)
4.5' (1370) TO 5' (1525)	0.198 (128)	0.132 (85)
5' (1525) TO 5.5' (1675)	0.239 (154)	0.132 (85)
5.5' (1675) TO 6' (1830)	0.284 (183)	0.132 (85)

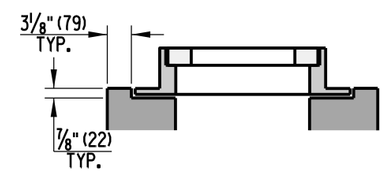

24" (610) x 24" (610) LAWN INLET BOX DETAIL

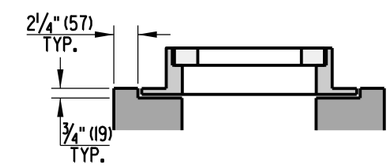

17⅝" (450) X 11⅝" (295) LAWN INLET BOX DETAIL

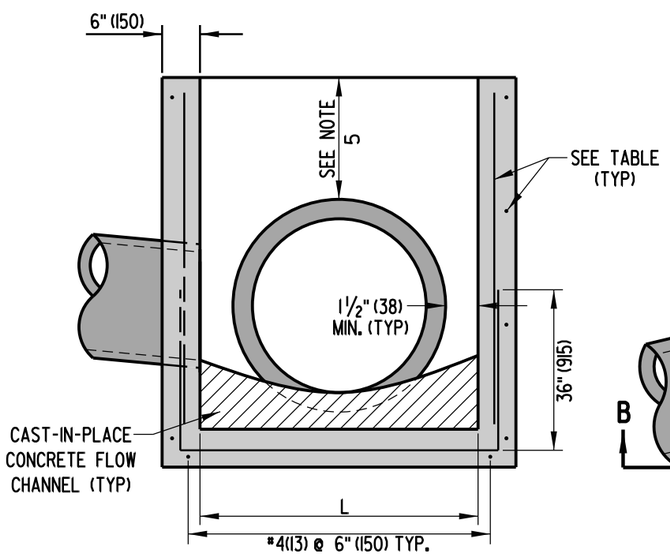

SECTION B-B

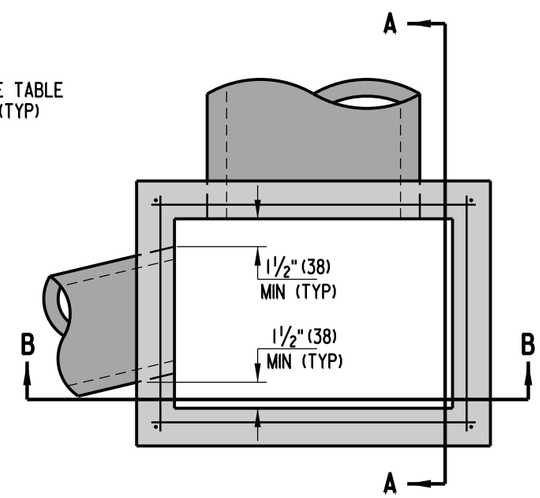

TOP VIEW

NOTES:

1). INLET BOXES SHALL BE PRECAST OR CAST-IN-PLACE.
2). PIPES SHALL NOT BE INSTALLED THROUGH ANY CORNER OF THE INLET BOX.
3). RISER SECTIONS MAY BE USED FOR DEEP INLET BOXES.
4). PIPES MAY BE INSTALLED NEAR OR THROUGH JOINTS FOR RISER SECTIONS.
5). WHEN THE COVER ABOVE THE PIPE IS LESS THAN 4" (100) TO THE COVER SLAB OR TOP UNIT OPENING, THE PORTION OF BOX WALL ABOVE THE PIPE MAY BE REMOVED AS SHOWN IN THE OPTIONAL PIPE OPENING DETAIL. THE AREA ABOVE THE PIPE SHALL THEN BE FORMED AND FILLED WITH HIGH-STRENGTH, NON-SHRINK GROUT MIXED WITH COARSE AGGREGATE IN A 1:1 RATIO BY WEIGHT.
6). CONCRETE FLOW CHANNEL SHALL BE WARPED FOR POSITIVE DRAINAGE.
7). WHEN INLET BOX IS PRECAST, PIPE OPENING SHALL BE BETWEEN 3" (75) AND 4" (100) LARGER THAN OUTSIDE DIAMETER OF PIPE AND SHALL NOT ENCROACH ON ADJACENT WALL.
8). REINFORCEMENT FOR LAWN INLET BOXES SHALL BE 4" (102) X 4" (102), W4 X W4 (W26 X W26) WELDED WIRE.

DELAWARE DEPARTMENT OF TRANSPORTATION	INLET BOX DETAILS		APPROVED SIGNATURE ON FILE (CHIEF ENGINEER) 01/19/2010 (DATE)
	STANDARD NO. D-4 (2009)	SHT. 1 OF 1	RECOMMENDED SIGNATURE ON FILE (DESIGN ENGINEER) 01/14/2010 (DATE)

08/19/2009

SCALE : N.T.S.

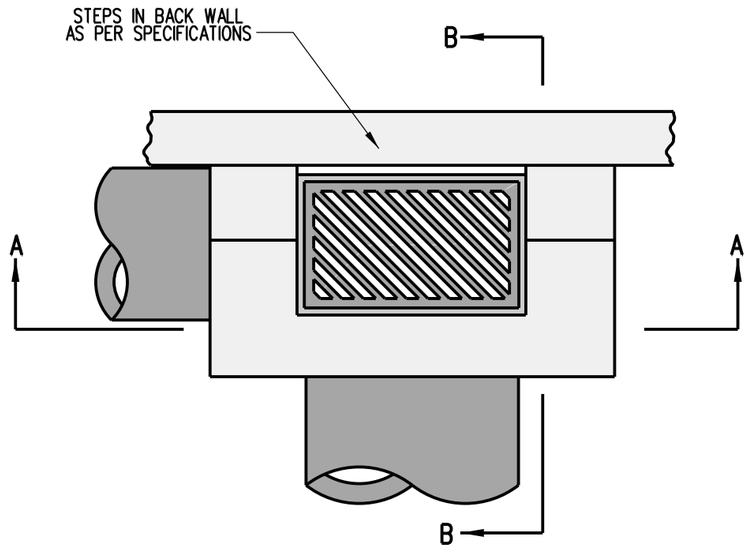

PLAN

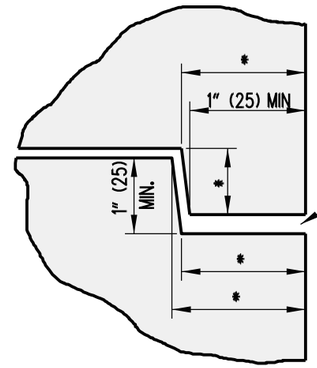

TYPE 1 JOINT DETAIL

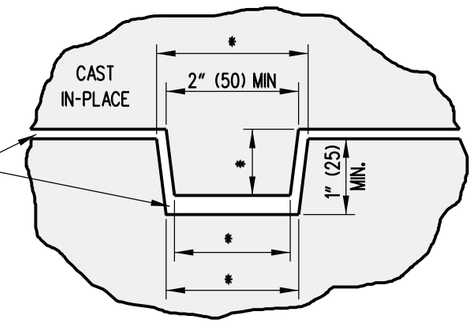

TYPE 2 JOINT DETAIL

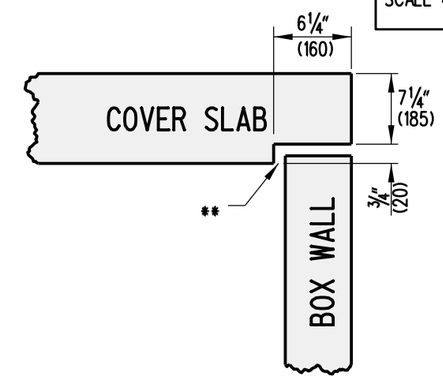

TYPE 3 JOINT DETAIL

* DIMENSIONS WILL VARY

** JOINT SEALANT AS PER SPECIFICATIONS ONLY BETWEEN 2 PRECAST UNITS

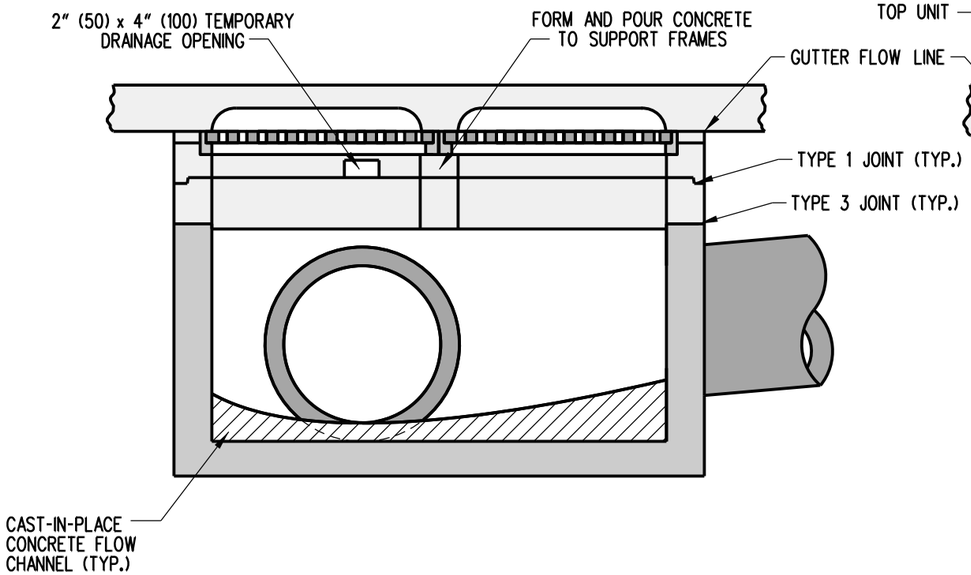

DOUBLE INLET SECTION

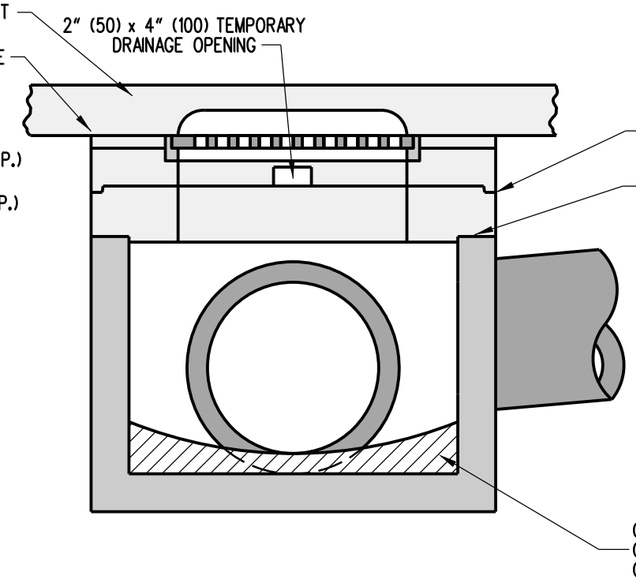

SECTION A-A

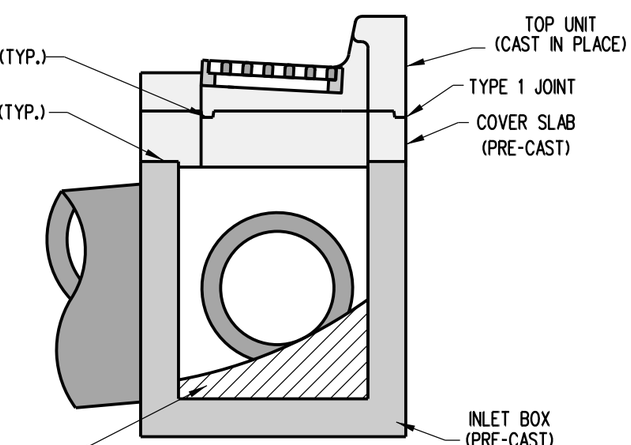

SECTION B-B

DELAWARE DEPARTMENT OF TRANSPORTATION	DRAINAGE INLET ASSEMBLY		APPROVED SIGNATURE ON FILE (CHIEF ENGINEER) 12/28/2010 (DATE)
	STANDARD NO. D-5 (2010)	SHT. 1 OF 9	RECOMMENDED SIGNATURE ON FILE (DESIGN ENGINEER) 12/27/2010 (DATE)

10/26/2010

SCALE : N.T.S.

DRAINAGE INLET FRAME AND GRATES

TYPE 1

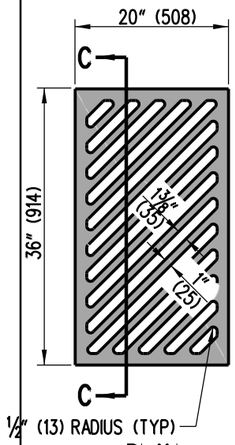

PLAN

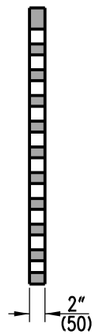

SECTION C-C

TYPE 2

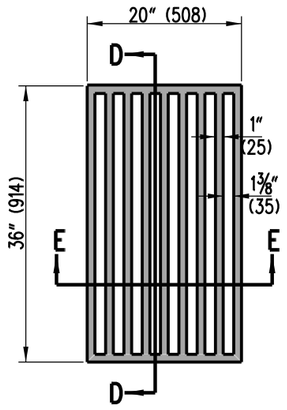

PLAN

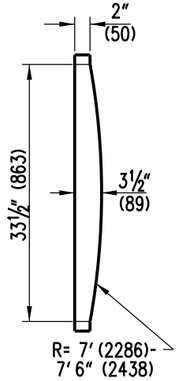

SECTION D-D

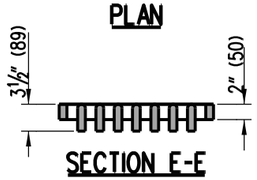

SECTION E-E

TYPE 3

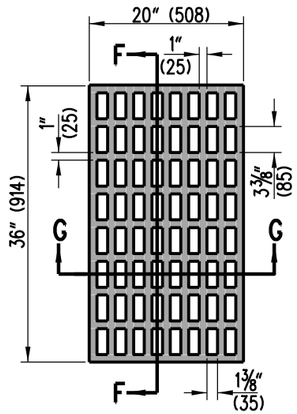

PLAN

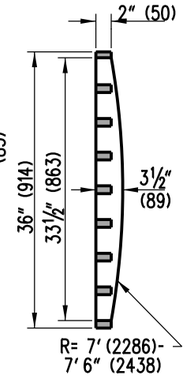

SECTION F-F

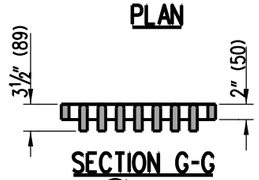

SECTION G-G

TYPE 4

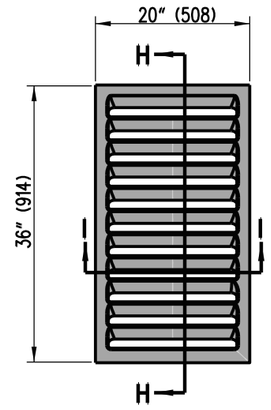

PLAN

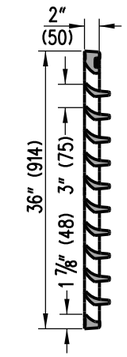

SECTION H-H

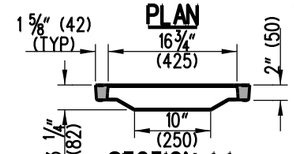

SECTION I-I

TYPE 5

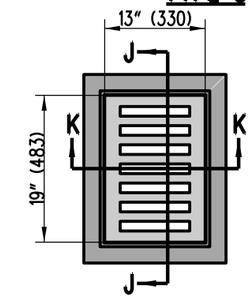

PLAN

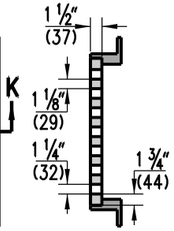

SECTION J-J

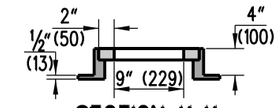

SECTION K-K

TYPE 6

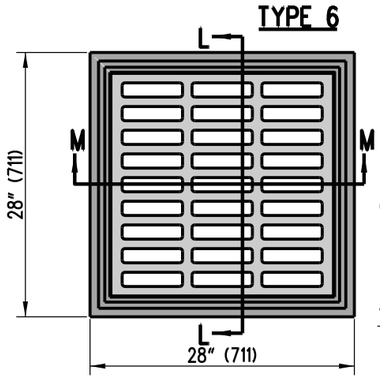

PLAN

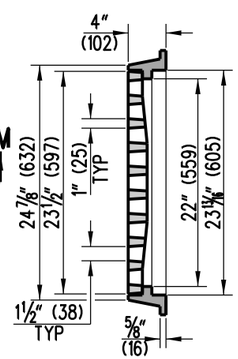

SECTION L-L

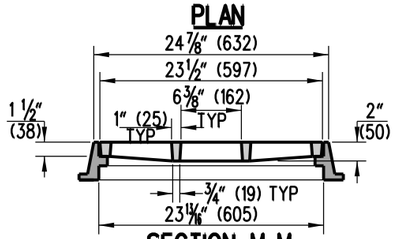

SECTION M-M

SECTION B-B

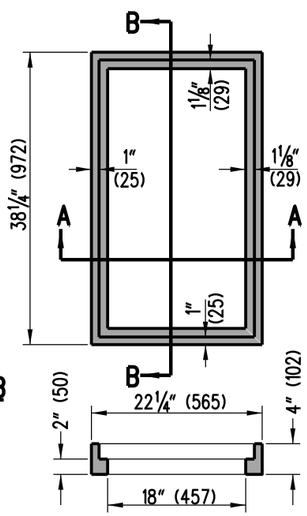

SECTION A-A

DRAINAGE INLET FRAME

THIS FRAME IS TO BE USED WITH TYPES 1 THROUGH 4 GRATES ONLY.

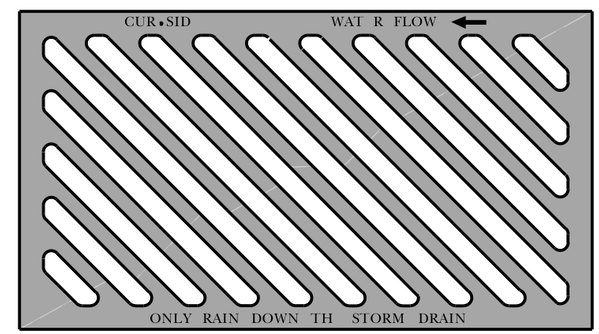

DRAINAGE GRATE LABELING EXAMPLE DETAIL

NOTES:

1). THE TYPE 2 DRAINAGE INLET GRATE SHALL NOT BE INSTALLED WHERE BICYCLE TRAFFIC MAY BE PRESENT.

2). THE TOP OF ALL DRAINAGE INLET GRATES SHALL BE LABELED "ONLY RAIN DOWN THE STORM DRAIN". ALSO, DRAINAGE INLET GRATES TYPE 1 AND TYPE 4 SHALL BE LABELED WITH "WATER FLOW" AND AN ARROW INDICATING FLOW DIRECTION AS SHOWN IN THE EXAMPLE DETAIL.

3). THE TYPE 1 DRAINAGE INLET GRATE SHALL BE LABELED WITH "CURBSIDE" AS SHOWN ON THE EXAMPLE DETAIL. ALL LABELING ON THE TYPE 1 SHALL BE ON BOTH TOP AND BOTTOM SIDES DUE TO THE TYPE 1 BEING REVERSIBLE.

4). THE TYPE 5 & 6 FRAME AND GRATE COMBINATIONS ARE TO BE USED IN CONJUNCTION WITH LAWN INLET BOXES ONLY. SEE SCHEDULE ON DETAIL D-4, SHEET 1 OF 1, FOR WHICH BOX SIZES ARE CONSIDERED LAWN INLET BOXES.

5). THE TYPE 6 FRAME AND GRATE COMBINATION SHOWN IS THE NEENAH FOUNDRY FRAME AND GRATE COMBINATION MODEL NF-1878-A5G, AN ACCEPTABLE ALTERNATIVE IS THE EAST JORDAN IRON WORKS FRAME AND GRATE COMBINATION MODEL V-5622.

DELAWARE DEPARTMENT OF TRANSPORTATION	DRAINAGE INLET FRAME AND GRATES	APPROVED	SIGNATURE ON FILE (CHIEF ENGINEER) — 12/28/2010 (DATE)
	STANDARD NO. D-5 (2010) — SHT. 2 OF 9	RECOMMENDED	SIGNATURE ON FILE (DESIGN ENGINEER) — 12/27/2010 (DATE)

12/31/2010

SCALE : NTS

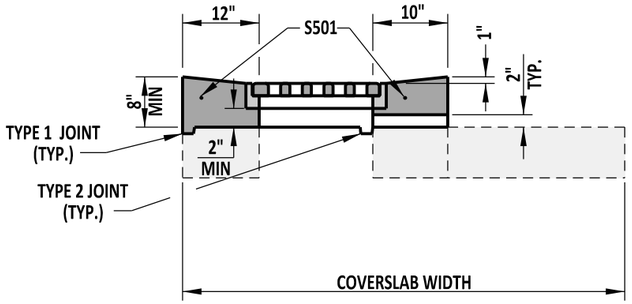

TYPE A

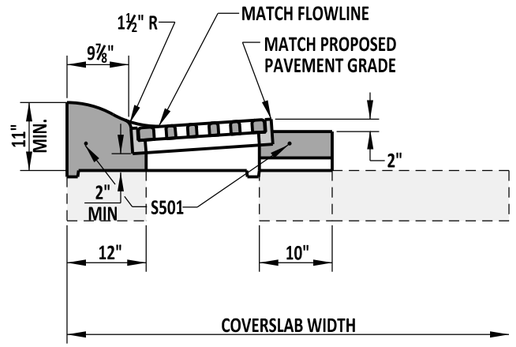

TYPE D

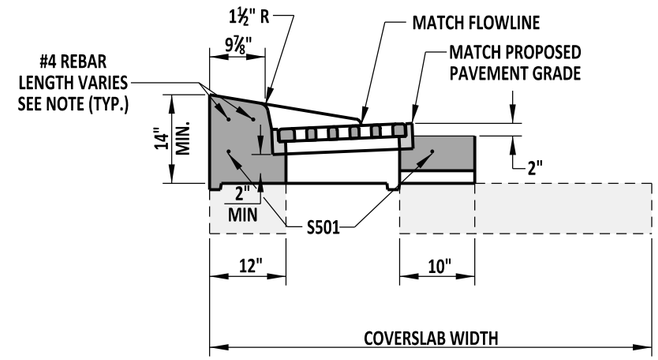

TYPE E

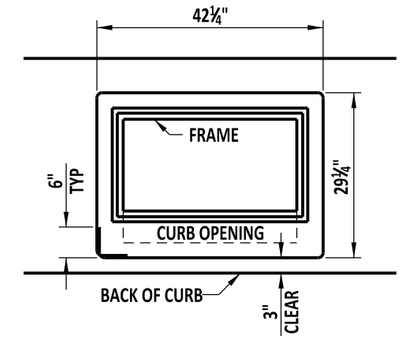

S501 BENDING DIAGRAM

S501 IS NOT REQUIRED TO BE ONE CONTINUOUS BAR. IF MORE THAN ONE BAR IS USED, THERE MUST BE A 12" OVERLAP BETWEEN BARS.

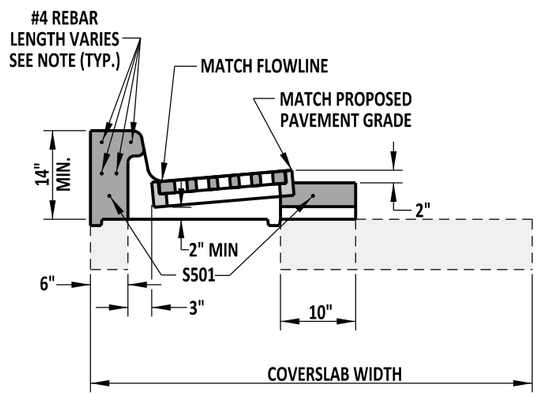

TYPE B

SEE CURB OPENING DETAIL ON THIS SHEET

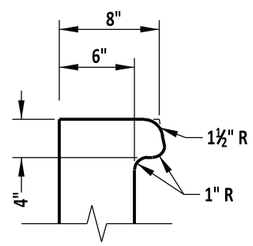

CURB OPENING DETAIL

INLET TOP UNIT APPLICATIONS	
TOP UNIT	CURB
TYPE A	USE IN DRAINAGE SWALE
TYPE B	INTEGRAL PCC CURB & GUTTER, TYPE 1-8 & 3-8, PCC CURB TYPE 1-8
TYPE C	INTEGRAL PCC CURB & GUTTER, TYPES 1-6, 3-6, 1-4, 3-4 , 1-2 AND 3-2 AND PCC CURB TYPE 1-6, 1-4, AND 1-2.
TYPE D	INTEGRAL PCC CURB & GUTTER, TYPE 2
TYPE E	PCC CURB TYPE 2

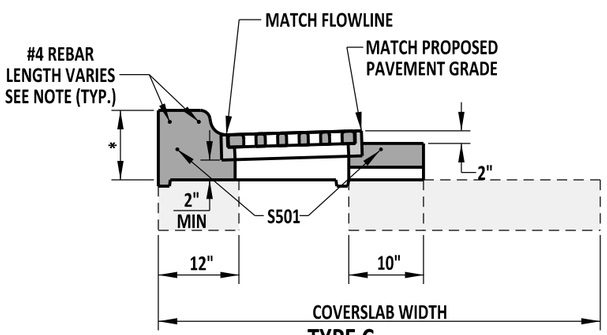

TYPE C

* - THIS DIMENSION VARIES BASED ON THE HEIGHT OF THE CURB AND GUTTER OR CURB USED:
- INTEGRAL P.C.C. CURB AND GUTTER, TYPES 1-6 AND 3-6 & CURB, TYPE 1-6 - 12" MIN.
- INTEGRAL P.C.C. CURB AND GUTTER, TYPES 1-4 AND 3-4 & CURB, TYPE 1-4 - 10" MIN.
- INTEGRAL P.C.C. CURB AND GUTTER, TYPES 1-2 AND 3-2 & CURB, TYPE 1-2 - 8" MIN.

NOTE: LENGTH OF #4 REBAR SHALL BE THE OUTSIDE OF THE DRAINAGE INLET BOX PLUS 2'-9".

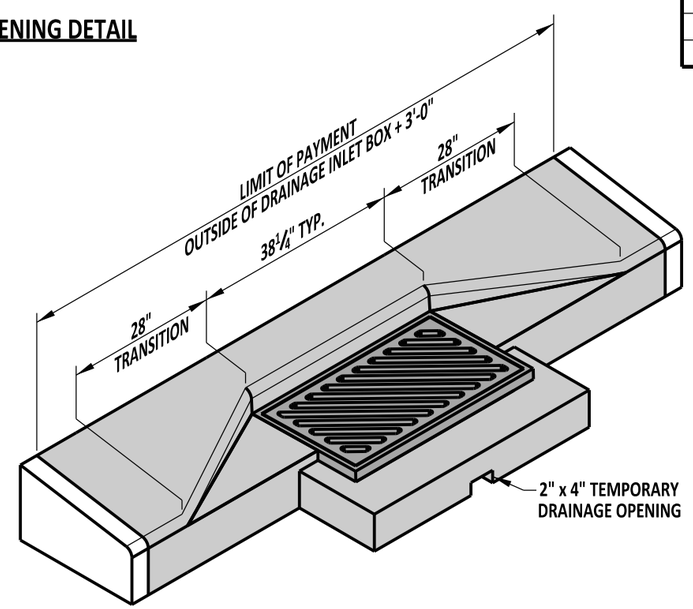

ISOMETRIC VIEW

TYPE E UNIT SHOWN

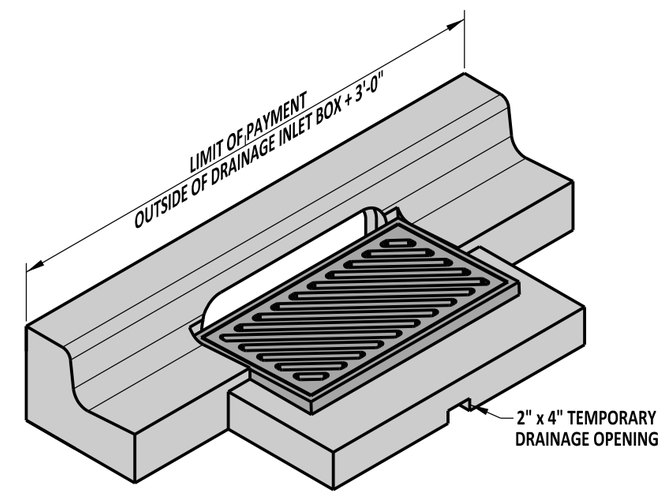

ISOMETRIC VIEW

TYPE B TOP UNIT SHOWN WITH INTEGRAL CURB & GUTTER TYPE 3

DELAWARE DEPARTMENT OF TRANSPORTATION	DRAINAGE INLET TOP UNITS	APPROVED	SIGNATURE ON FILE (CHIEF ENGINEER) — 01/07/2013 (DATE)
	STANDARD NO. D-5 (2012) — SHT. 3 OF 9	RECOMMENDED	SIGNATURE ON FILE (DESIGN ENGINEER) — 12/20/2012 (DATE)

12/4/2012

SCALE : N.T.S.

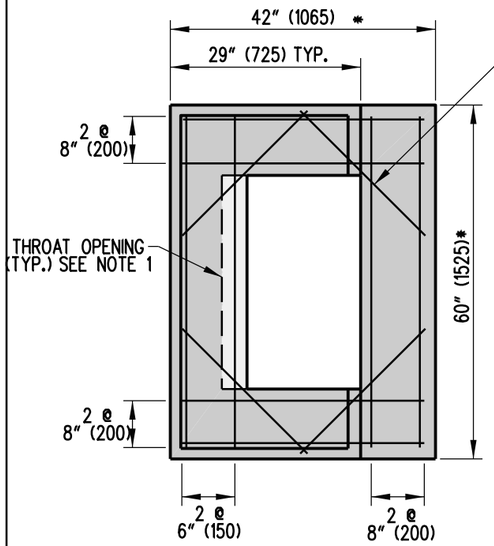

48" (1220) x 30" (760) INLET

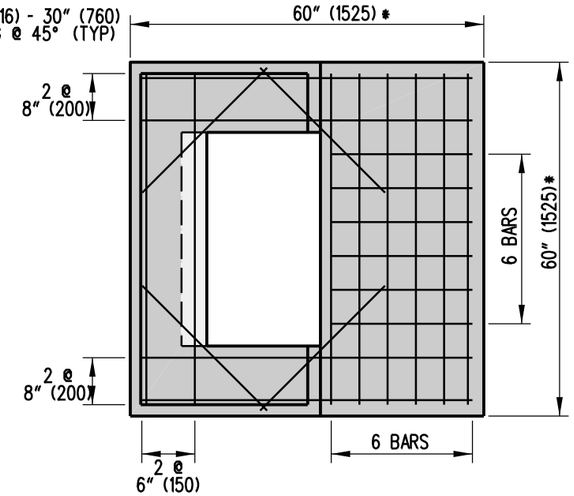

48" (1220) x 48" (1220) INLET

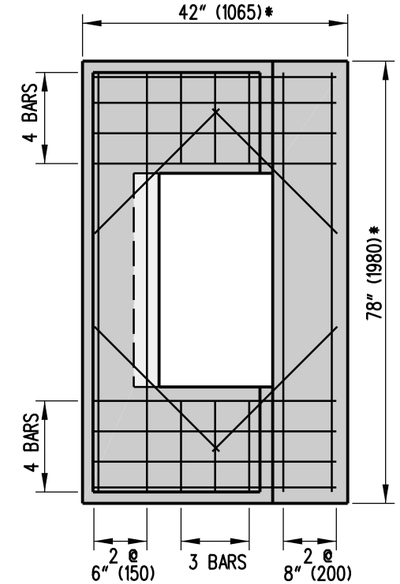

66" (1675) x 30" (760) INLET

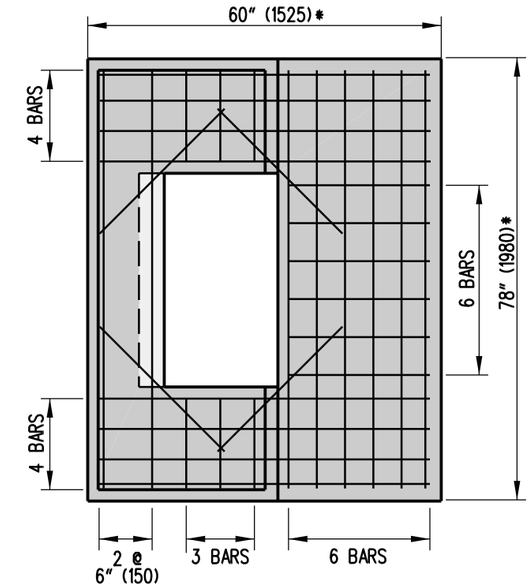

66" (1675) x 48" (1220) INLET

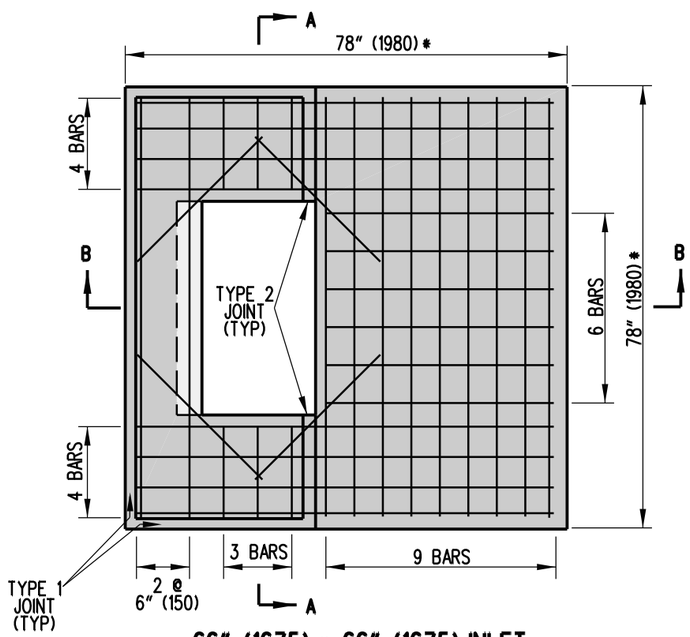

66" (1675) x 66" (1675) INLET

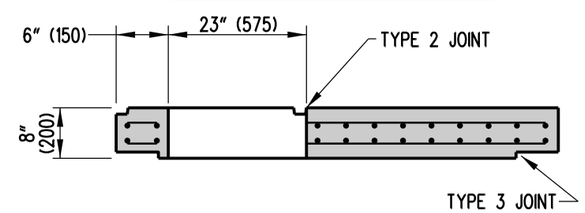

SECTON B-B
FOR TYPE B TOP UNITS

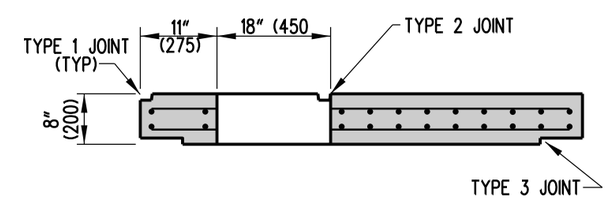

SECTON B-B
FOR TYPES A, C, D, & E TOP UNITS

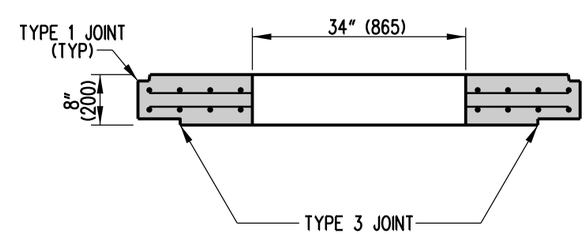

SECTION A-A

NOTES :

1). RELOCATE ENCROACHING REINFORCING BARS WHEN USING TYPE B UNIT.
2). COVER SLABS SHALL BE PRECAST AND MUST BE SIZED TO FIT INLET BOX DIMENSIONS.
3). ALL BARS ARE TO BE #5 (#16) SPACED @ 6" (150) UNLESS NOTED OTHERWISE. TOP REINFORCEMENT SHALL BE 0.11 IN^2 (70 mm^2) HORIZONTAL REINFORCEMENT PER FOOT IN BOTH DIRECTIONS.
4). MINIMUM BAR COVER = 1 1/2" (38).

* - DIMENSIONS TO MATCH OUTSIDE TO OUTSIDE DIMENSIONS OF BOX.

DELAWARE DEPARTMENT OF TRANSPORTATION	DRAINAGE INLET COVER SLAB DETAILS		APPROVED SIGNATURE ON FILE (CHIEF ENGINEER) 12/28/2010 (DATE)
	STANDARD NO. D-5 (2010)	SHT. 4 OF 9	RECOMMENDED SIGNATURE ON FILE (DESIGN ENGINEER) 12/27/2010 (DATE)

12/31/2010

SCALE : N.T.S.

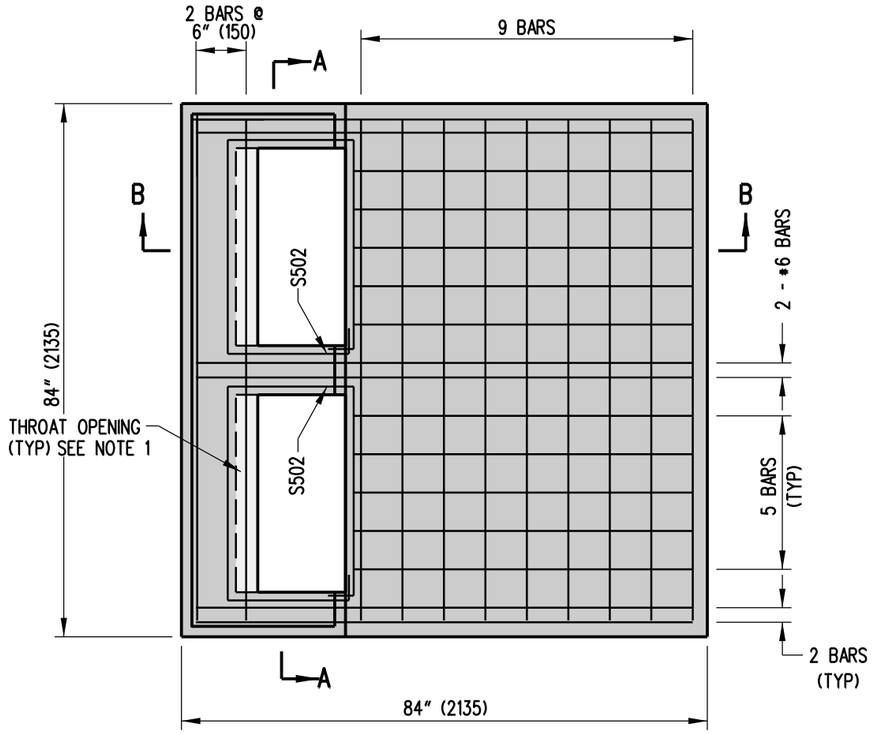

72" (1830) x 72" (1830) INLET

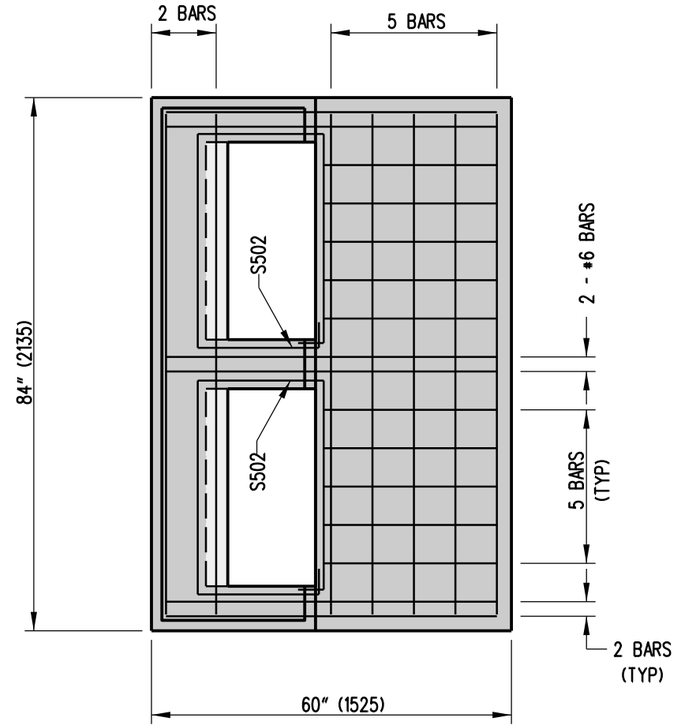

72" (1830) x 48" (1220) INLET

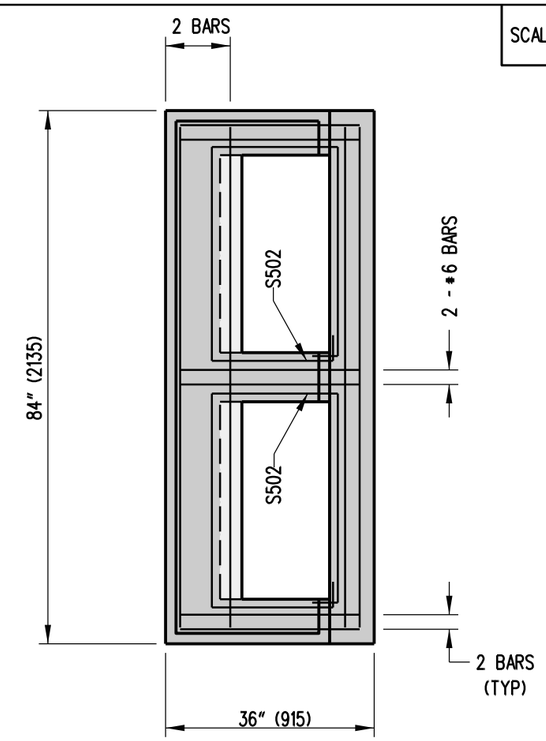

72" (1830) x 24" (610) INLET

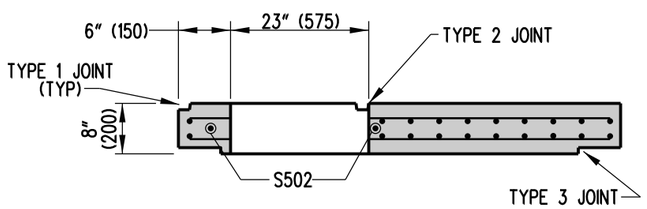

SECTON B-B

FOR TYPE B TOP UNITS

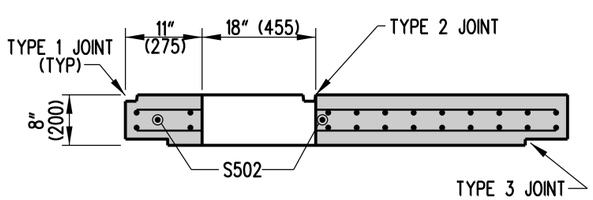

SECTON B-B

FOR TYPES A, C, D, & E TOP UNITS

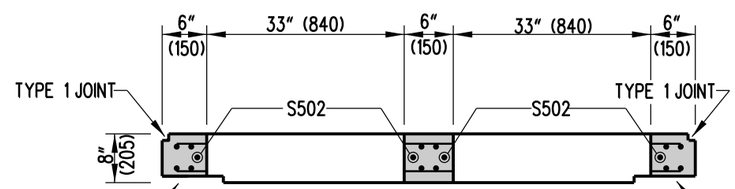

SECTION A-A

NOTES :

1). RELOCATE ENCROACHING REINFORCING BARS WHEN USING TYPE B TOP UNIT.
2). COVER SLABS ARE TO BE PRECAST AND MUST BE SIZED TO FIT INLET BOX DIMENSIONS.
3). ALL BARS ARE TO BE #5 (#16) SPACED @ 6" (150) UNLESS NOTED OTHERWISE. TOP REINFORCEMENT SHALL BE 0.11 IN^2 (70 mm^2) MIN. HORIZONAL REINFORCEMENT PER FOOT IN BOTH DIRECTIONS.
4). MINIMUM BAR COVER = 1 ½" (38).

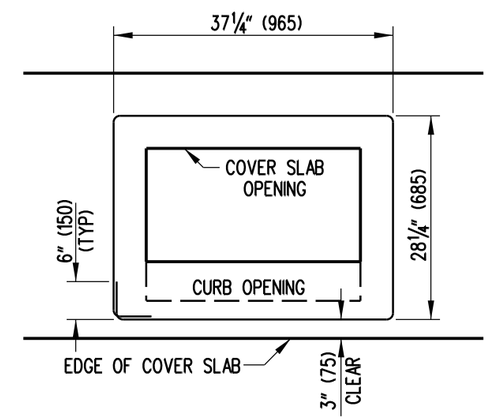

S502 BENDING DIAGRAM

S502 IS NOT REQUIRED TO BE ONE CONTINUOUS BAR. IF MORE THAN ONE BAR IS USED, THERE MUST BE A 12" (300) OVERLAP BETWEEN BARS.

DELAWARE DEPARTMENT OF TRANSPORTATION	DOUBLE INLET COVER SLAB DETAILS		APPROVED SIGNATURE ON FILE (CHIEF ENGINEER) 12/28/2010 (DATE)
	STANDARD NO. D-5 (2010)	SHT. 5 OF 9	RECOMMENDED SIGNATURE ON FILE (DESIGN ENGINEER) 12/27/2010 (DATE)

12/23/2010

SCALE : NTS

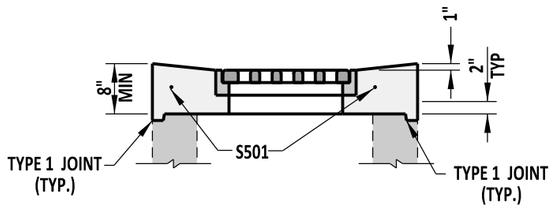

TYPE A

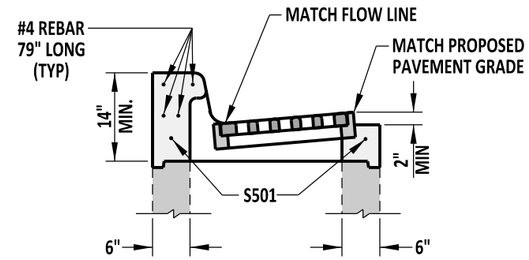

TYPE B

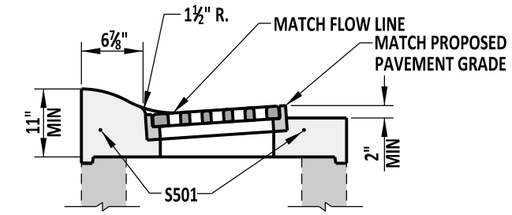

TYPE D

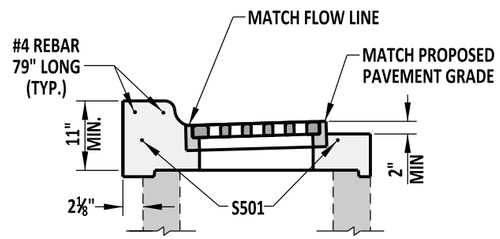

TYPE C

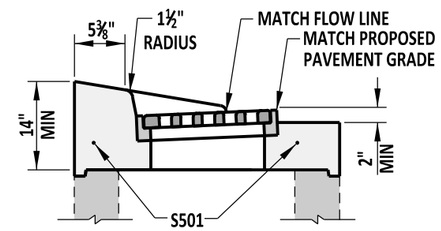

TYPE E

TOP UNIT DETAILS

NOTE: SEE DETAIL D-5, SHEET 3 OF 9 FOR INLET TOP UNIT APPLICATIONS.

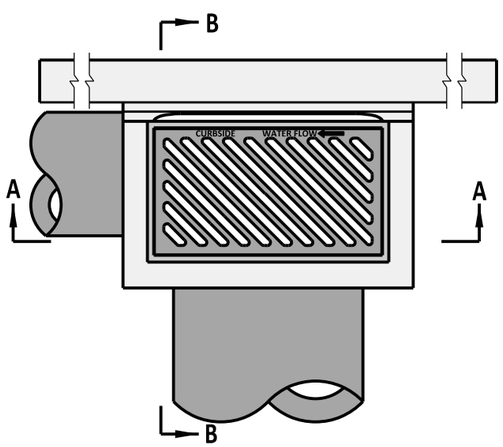

TOP VIEW

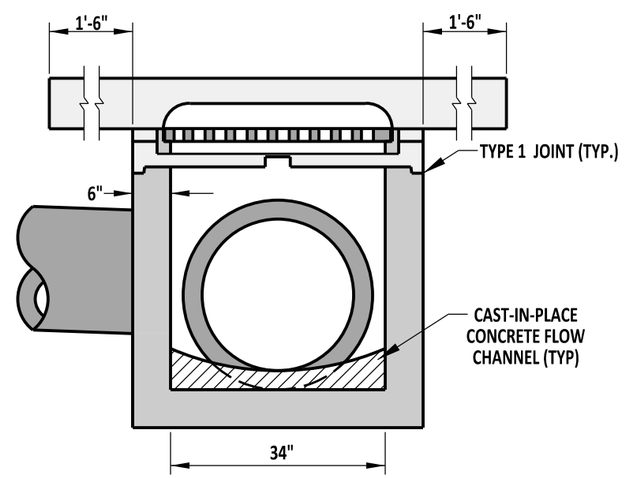

SECTION A-A

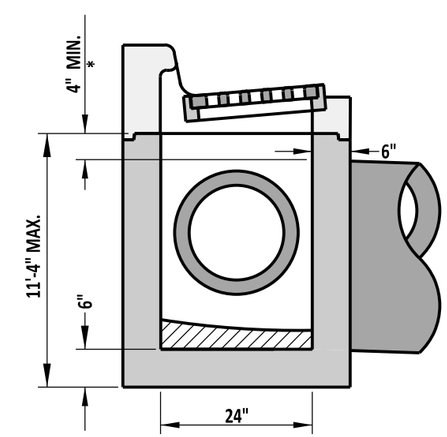

SECTION B-B

DRAINAGE INLET DETAILS

NOTE: REFER TO PREVIOUS SHEETS FOR REINFORCING REQUIREMENTS

* - SEE OPTIONAL PIPE OPENING DETAIL ON STANDARD NO. D-4, SHEET 1 OF 1

DELAWARE DEPARTMENT OF TRANSPORTATION	34" x 24" DRAINAGE INLET DETAILS			APPROVED	SIGNATURE ON FILE (CHIEF ENGINEER) — 01/07/2013 (DATE)
	STANDARD NO. D-5 (2012)	SHT. 6 OF 9		RECOMMENDED	SIGNATURE ON FILE (DESIGN ENGINEER) — 12/20/2012 (DATE)

12/4/2012

SCALE : N.T.S.

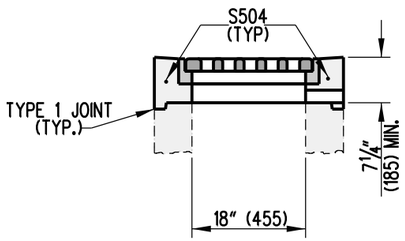

TYPE A

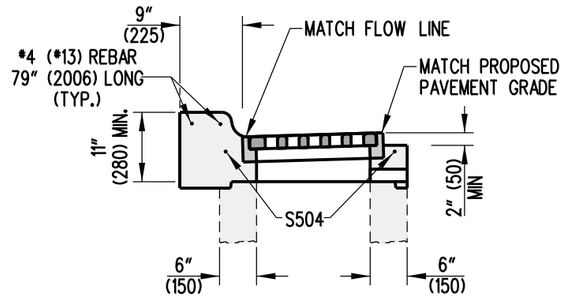

TYPE C

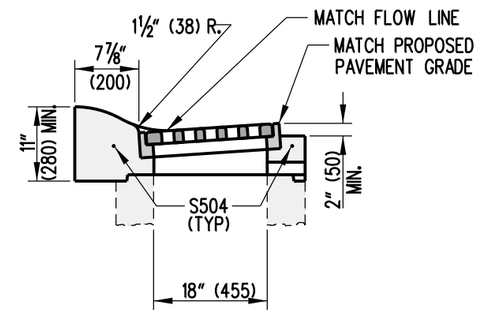

TYPE D

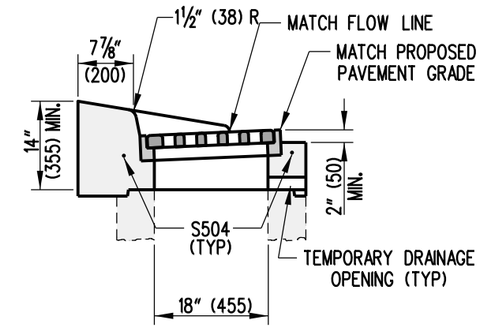

TYPE E

TOP UNIT DETAILS

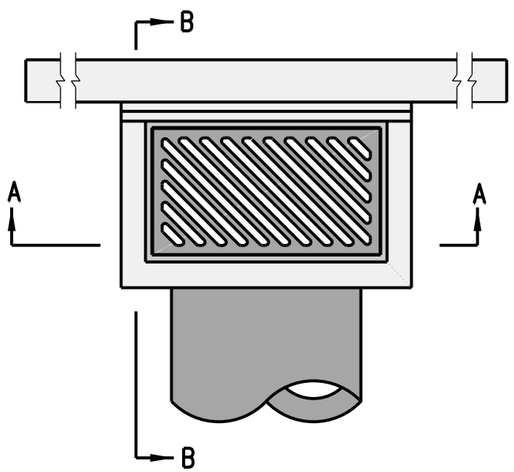

TOP VIEW

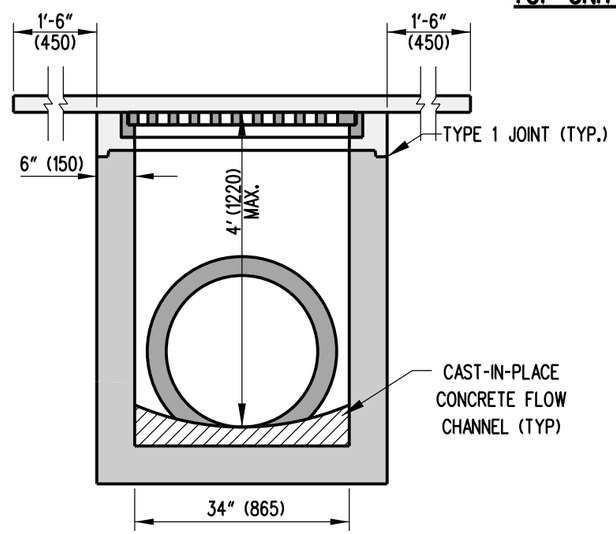

SECTION A-A

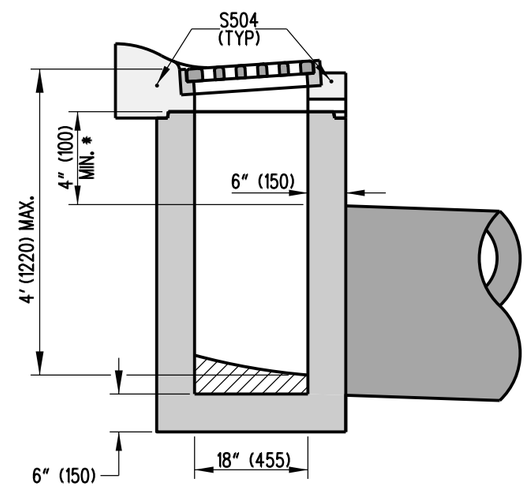

SECTION B-B

* - SEE OPTIONAL PIPE OPENING DETAIL ON STANDARD D-4, SHEET 1 OF 1.

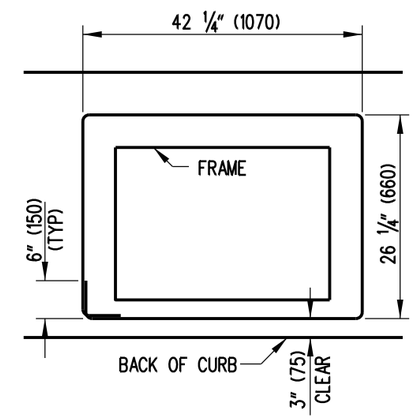

S504 BENDING DIAGRAM

S504 IS NOT REQUIRED TO BE ONE CONTINUOUS BAR. IF MORE THAN ONE BAR IS USED, THERE MUST BE A 12" (300) OVERLAP BETWEEN BARS.

NOTES:

1). REFER TO PREVIOUS SHEETS FOR REINFORCEMENT REQUIREMENTS.
2). THE HEIGHT OF THIS INLET IS LIMITED TO 4' (1220) MAXIMUM, THEREFORE STEPS WILL NOT BE REQUIRED AND SHOULD NOT BE INSTALLED ON THIS INLET.
3). REFER TO DETAIL D-5, SHEET 3 OF 9 FOR INLET TOP UNIT APPLICATION.

DELAWARE DEPARTMENT OF TRANSPORTATION	34" (865) x 18" (455) DRAINAGE INLET DETAILS		APPROVED SIGNATURE ON FILE (CHIEF ENGINEER) 12/28/2010 (DATE)
	STANDARD NO. D-5 (2010)	SHT. 7 OF 9	RECOMMENDED SIGNATURE ON FILE (DESIGN ENGINEER) 12/27/2010 (DATE)

10/28/2010

SCALE : N.T.S.

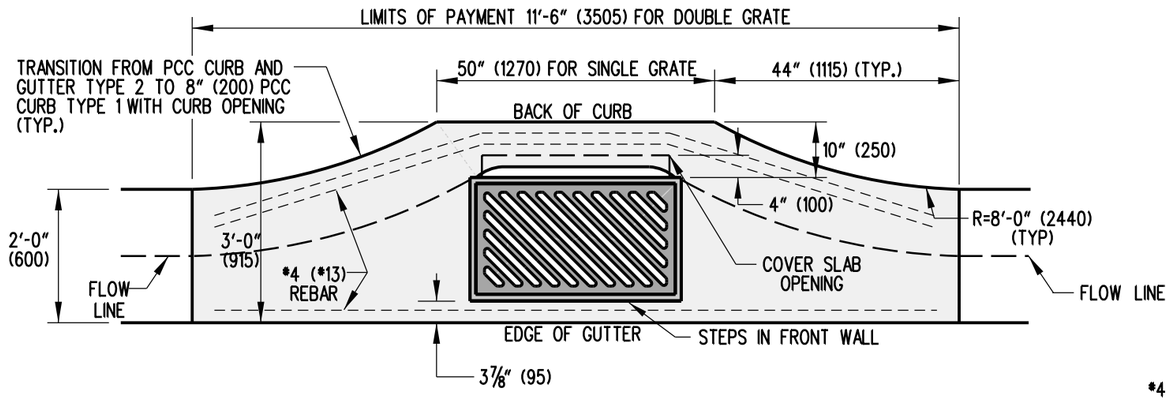

SINGLE GRATE SETUP

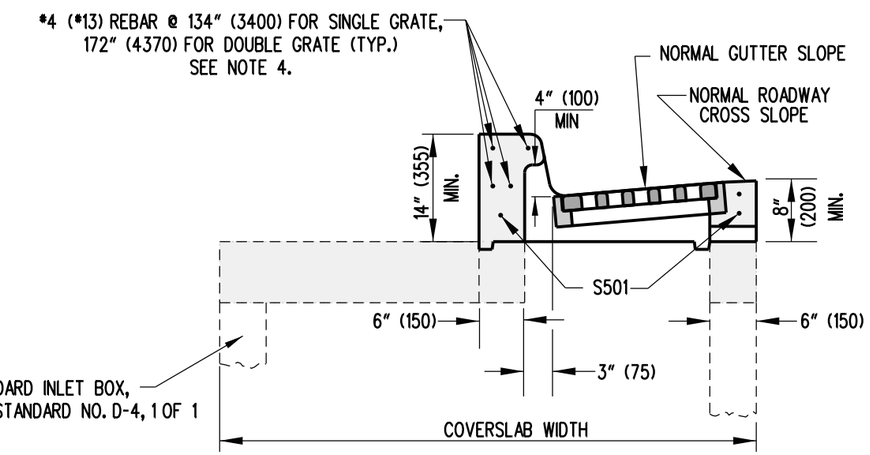

SUBDIVISION TOP & CONFIGURATION

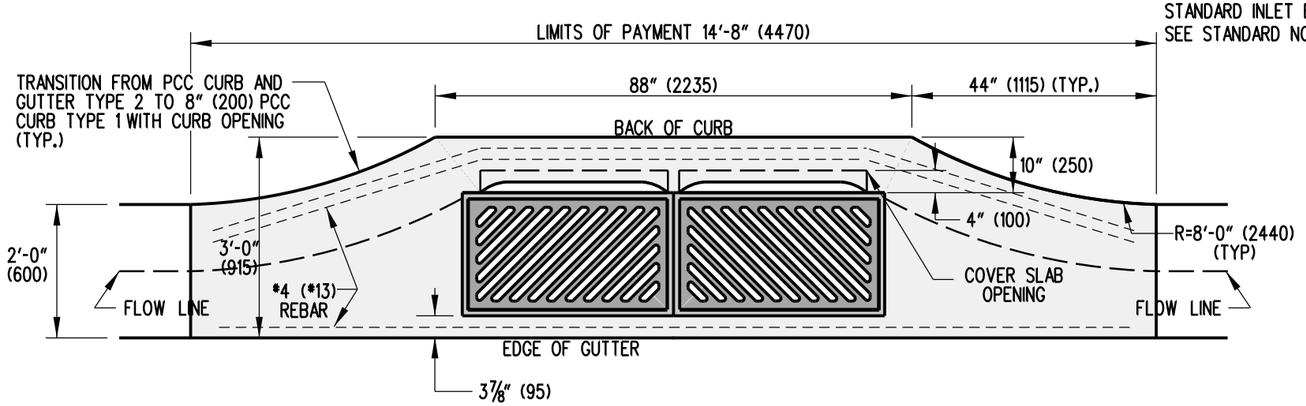

DOUBLE GRATE SETUP

NOTES:

1). MINIMUM BOX SIZE TO BE 34" (850) x 24" (600).

2). PIPE OPENINGS IN THE FRONT WALL SHALL NOT INTERFERE WITH THE STEPS. THE PIPE SHALL BE SHIFTED HORIZONTALLY TO AVOID THE STEPS. IT MAY BE NECESSARY TO USE A LARGER BOX TO AVOID CONFLICT BETWEEN STEPS AND PIPE OPENING.

3). SEE DETAIL D-5, SHEET 3 OF 9, FOR S501 BAR DIAGRAM.

4). THE REBAR IN THE HEAD IS PREFERRED TO BE 1 CONTINUOUS PIECE, HOWEVER, IF MULTIPLE PIECES ARE TO BE USED, EACH PIECE SHALL OVERLAP BY 12" (300) MINIMUM AND THE FINAL LENGTH OF THE SPLICED REBAR SHALL BE AS NOTED ON THIS DETAIL.

DELAWARE DEPARTMENT OF TRANSPORTATION	DRAINAGE INLET TOP UNIT, TYPE S		APPROVED SIGNATURE ON FILE (CHIEF ENGINEER) 12/28/2010 (DATE)
	STANDARD NO. D-5 (2010)	SHT. 8 OF 9	RECOMMENDED SIGNATURE ON FILE (DESIGN ENGINEER) 12/27/2010 (DATE)

12/23/2010

SCALE : N.T.S.

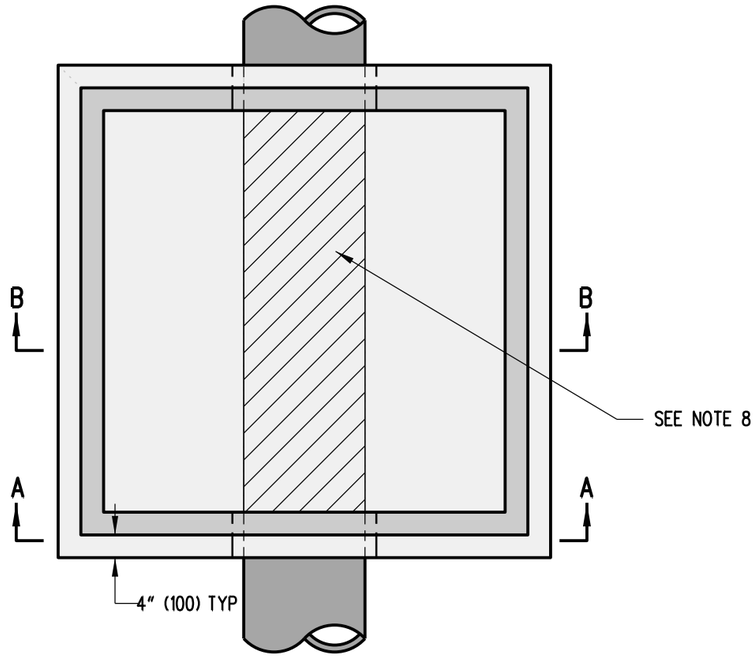

PLAN VIEW

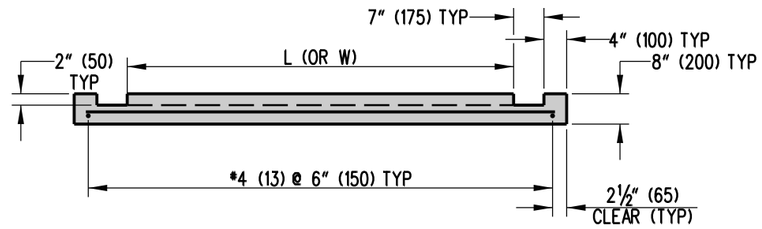

CAST-IN-PLACE BOTTOM SECTION VIEW

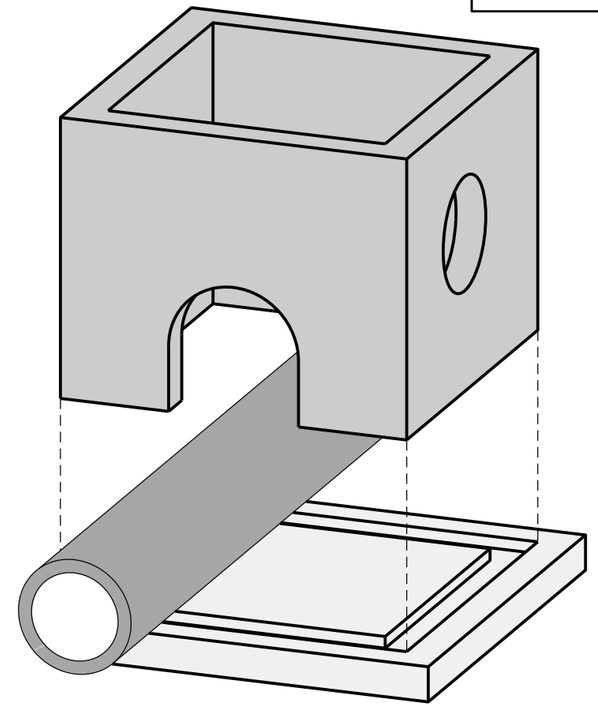

ISOMETRIC VIEW

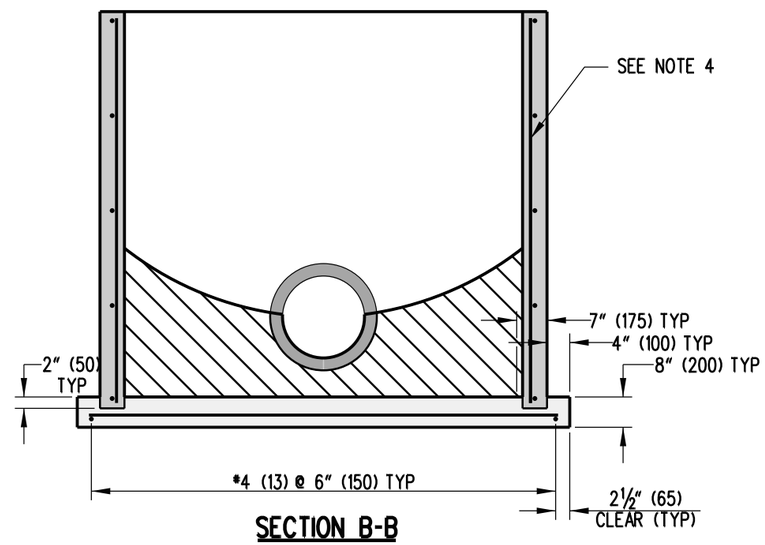

SECTION B-B

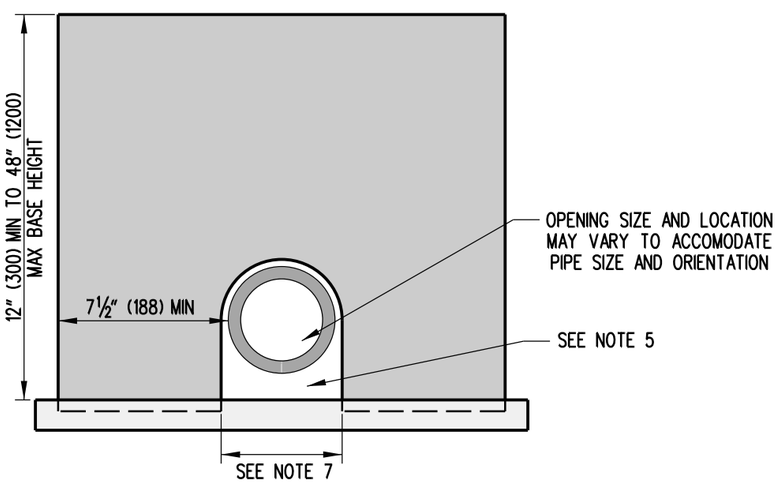

SECTION A-A

NOTES:

1). SEE DETAIL D-4, SHEET 1 OF 1 FOR BOX DETAILS AND NOTES.
2). ALL REINFORCEMENT SHALL HAVE A MINIMUM COVER OF 1 ½" (38) UNLESS NOTED OTHERWISE.
3). PIPE SHALL BE SUPPORTED ON BOTH ENDS DURING THE CONSTRUCTION OF THE BASE.
4). VERTICAL WALL REINFORCEMENT SHALL COMPLY WITH A.S.T.M. A615, 0.12 IN/FT IN EACH DIRECTION, VERTICALLY AND HORIZONTALLY.
5). DOGHOUSE OPENING SHALL BE FILLED WITH HIGH STRENGTH, NON-SHRINK GROUT MIXED WITH COARSE AGGREGATE IN A 1:1 RATION BY WEIGHT.
6). THE TOP OF THE DOGHOUSE OPENING SHALL, IN NO CIRCUMSTANCES, BE LESS THAN 4" (100) FROM THE TOP OF THE BOX.
7). DOGHOUSE OPENING WIDTH SHALL BE BETWEEN 3" (75) AND 4" (100) LARGER THAN THE OUTSIDE DIAMETER OF THE PIPE AND SHALL NOT ENCROACH ON THE ADJACENT WALL.
8). EXISTING PIPE IS TO EITHER BE COMPLETELY REMOVED BY SAWCUTTING AS CLOSE TO THE INSIDE BOX WALL AS POSSIBLE, OR BY REMOVING THE TOP PORTION OF THE PIPE AND USING THE REMAINING PIPE SECTION AS THE BOTTOM OF THE FLOW CHANNEL, AS SHOWN IN SECTION B-B.

DELAWARE DEPARTMENT OF TRANSPORTATION	DOGHOUSE INLET BOX		APPROVED SIGNATURE ON FILE (CHIEF ENGINEER) 12/28/2010 (DATE)
	STANDARD NO. D-5 (2010)	SHT. 9 OF 9	RECOMMENDED SIGNATURE ON FILE (DESIGN ENGINEER) 12/27/2010 (DATE)

08/08/2010

SCALE : N.T.S.

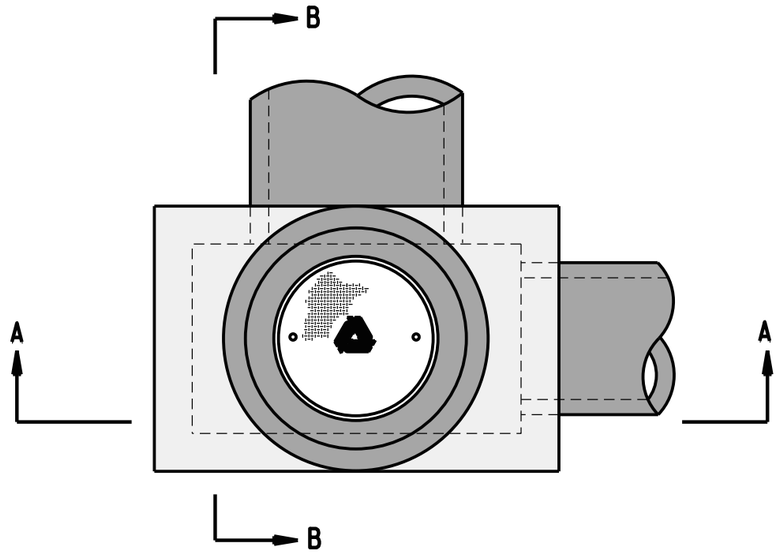

PLAN

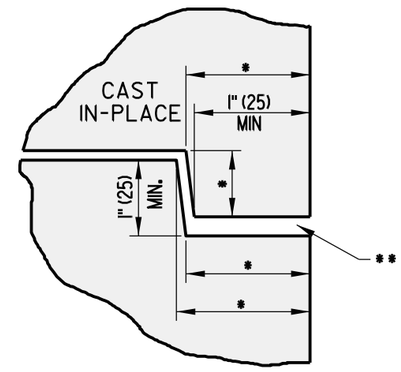

TYPE 1 JOINT DETAIL

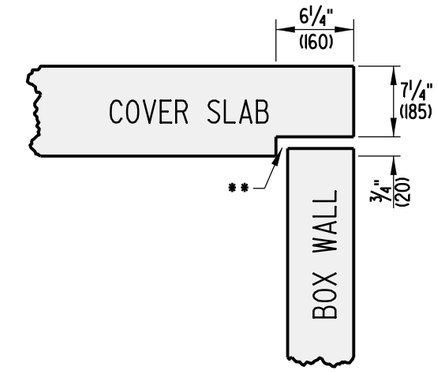

TYPE 3 JOINT DETAIL

* DIMENSIONS MAY VARY
** JOINT SEALANT AS PER SPECIFICATIONS ONLY BETWEEN 2 PRECAST UNITS

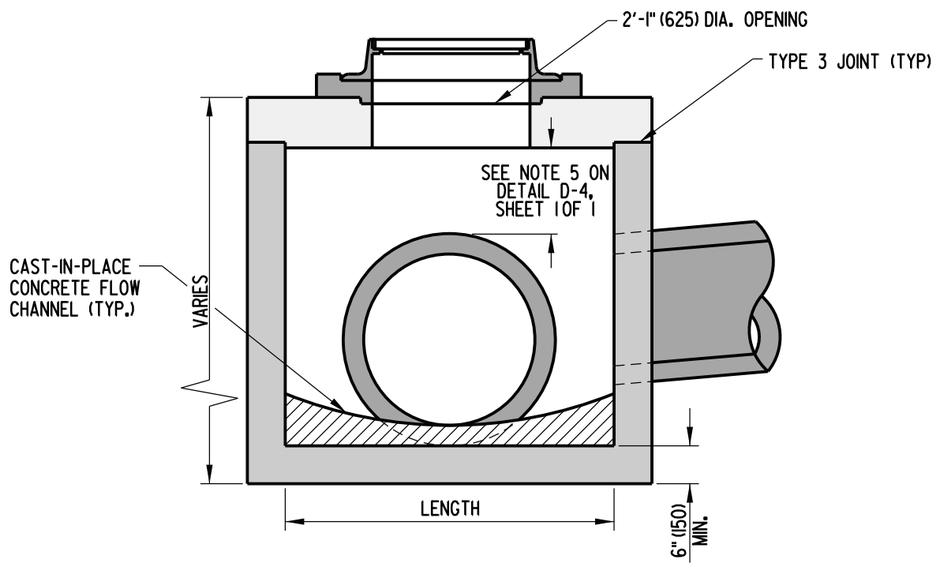

SECTION A-A

• - SEE OPTIONAL PIPE OPENING DETAIL ON STANDARD D-4, SHEET 1 OF 1.

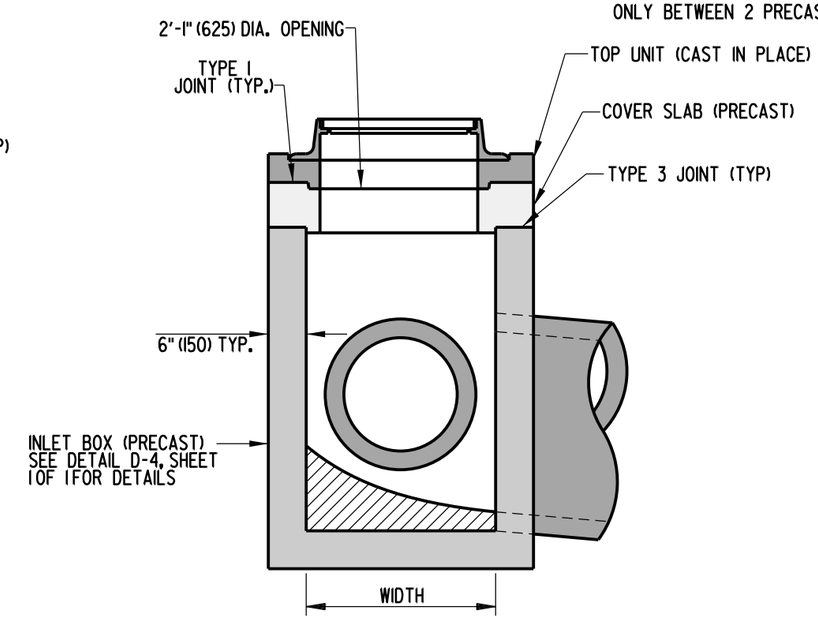

SECTION B-B

BOX MANHOLE ASSEMBLY

DELAWARE DEPARTMENT OF TRANSPORTATION	MANHOLE DETAILS		APPROVED	SIGNATURE ON FILE (CHIEF ENGINEER) — 01/19/2010 (DATE)
	STANDARD NO. D-6 (2009)	SHT. 1 OF 4	RECOMMENDED	SIGNATURE ON FILE (DESIGN ENGINEER) — 01/14/2010 (DATE)

10/20/2009

SCALE : N.T.S.

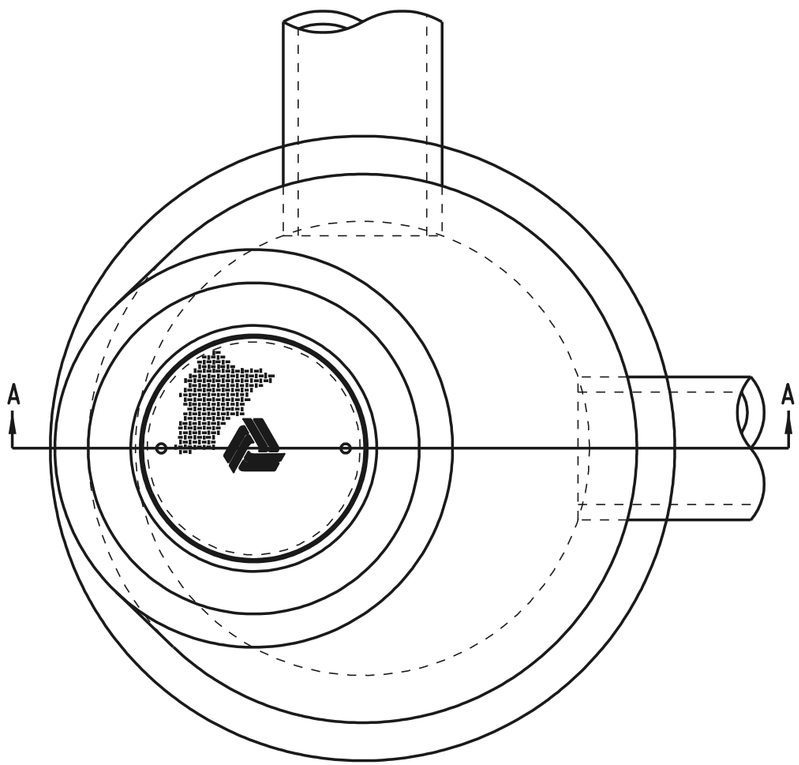

PLAN

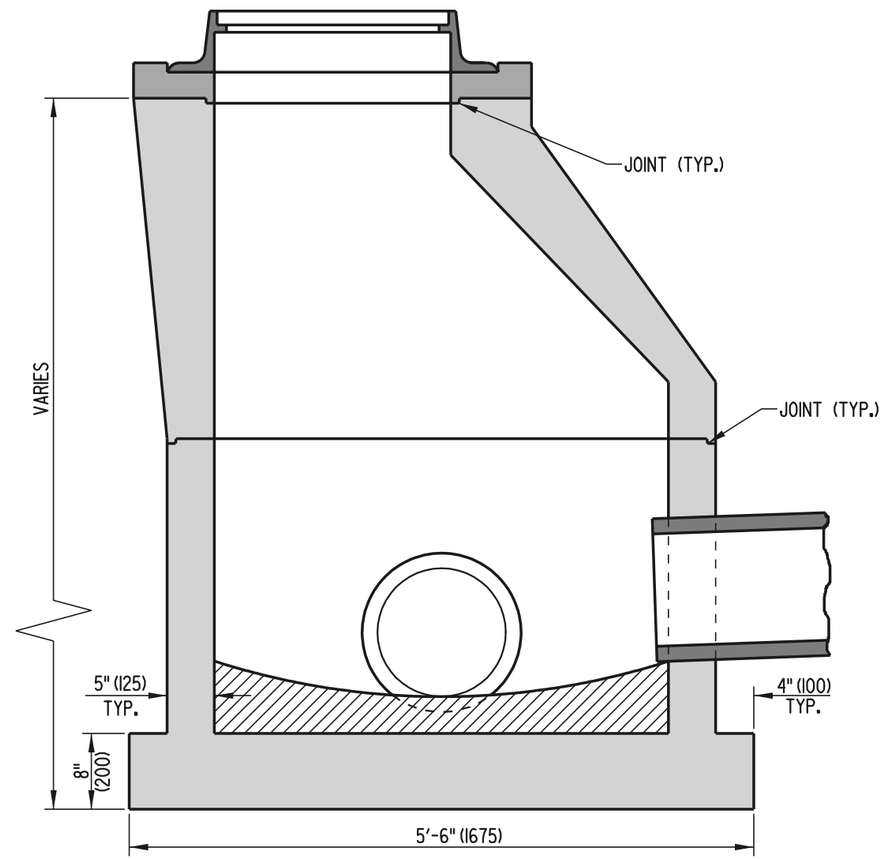

SECTION A-A

ROUND MANHOLE ASSEMBLY

NOTE: ROUND MANHOLES SHALL BE CONSTRUCTED IN ACCORDANCE WITH AASHTO M 199.

DELAWARE DEPARTMENT OF TRANSPORTATION	MANHOLE DETAILS		APPROVED CHIEF ENGINEER DATE 6/18/01
	STANDARD NO. D-6 (2001)	SHT. 2 OF 4	RECOMMENDED DESIGN ENGINEER DATE 6/15/01

06/06/2001

SCALE : N.T.S.

NOTE: TOP UNIT IS TO BE CAST IN PLACE TO GRADE AS SPECIFIED ON PLAN SHEETS OR AS DIRECTED BY ENGINEER.

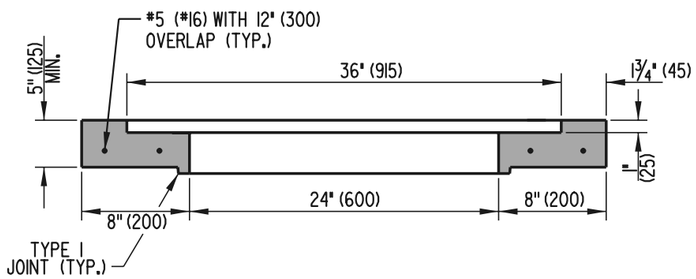

SECTION A-A

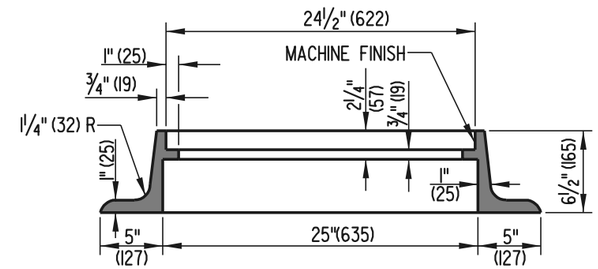

SECTION B-B

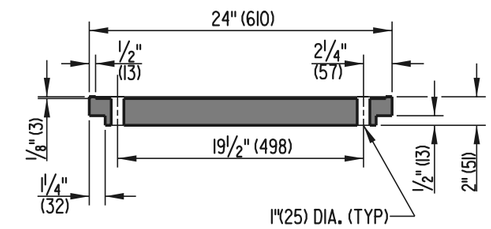

SECTION C-C

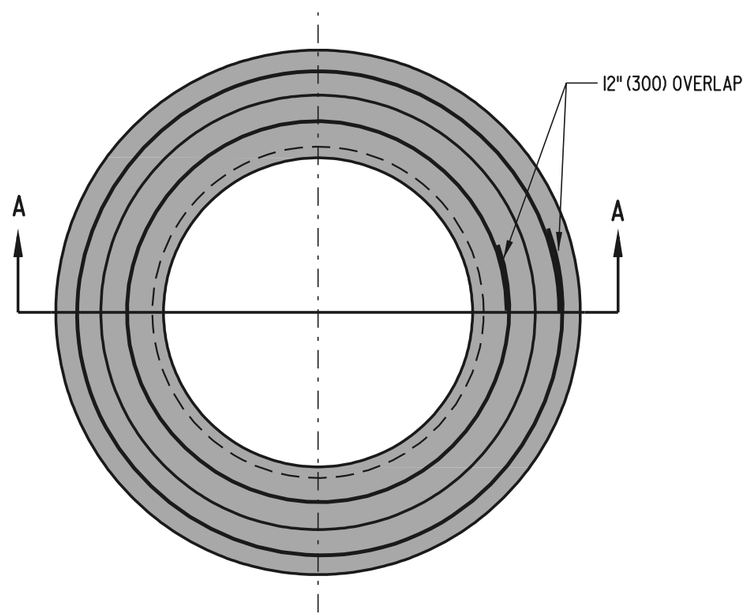

TOP UNIT

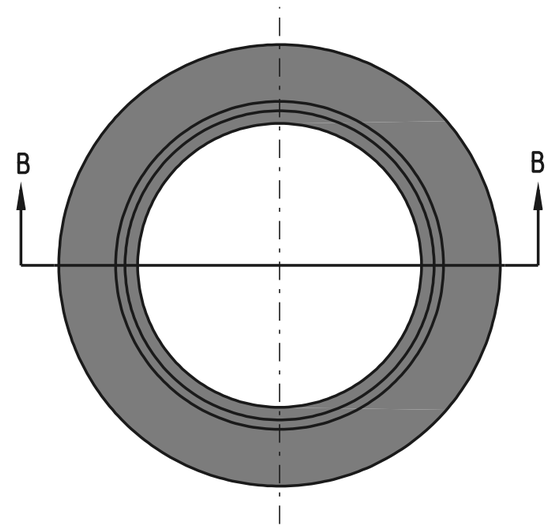

FRAME

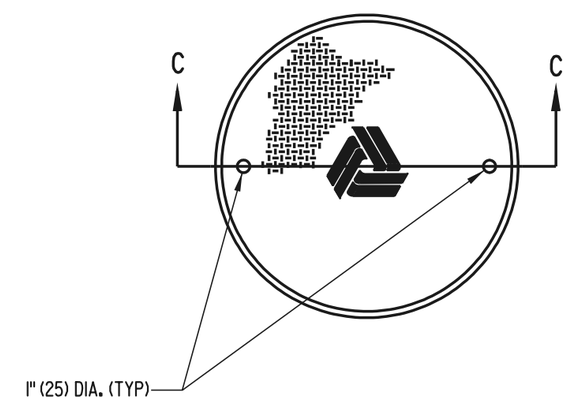

COVER

DELAWARE DEPARTMENT OF TRANSPORTATION	MANHOLE DETAILS		APPROVED [signature] CHIEF ENGINEER 6/18/01 DATE
	STANDARD NO. D-6 (2001)	SHT. 3 OF 4	RECOMMENDED [signature] DESIGN ENGINEER 6/15/01 DATE

05/21/2001

SCALE : N.T.S.

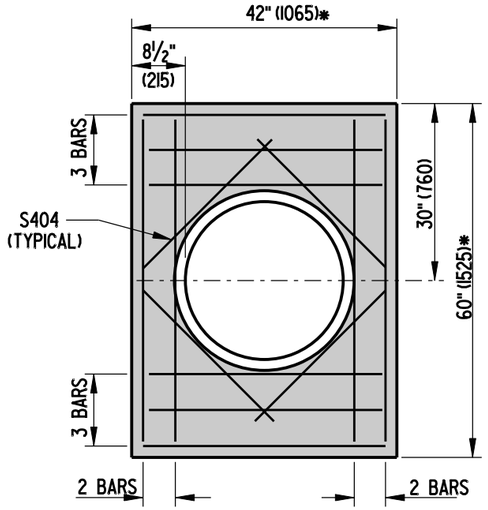

48" (1220) X 30" (760) MANHOLE

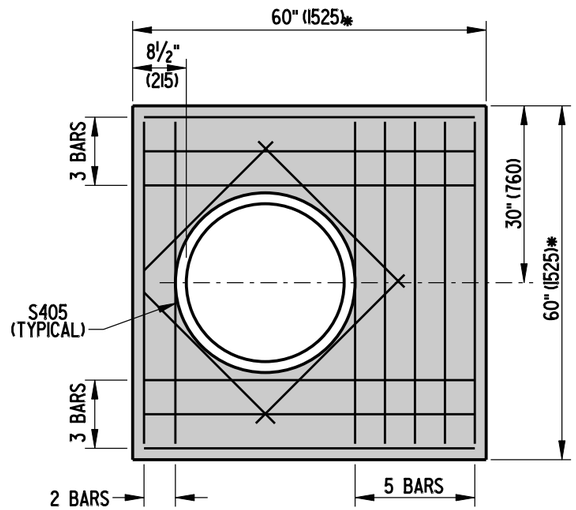

48" (1220) X 48" (1220) MANHOLE

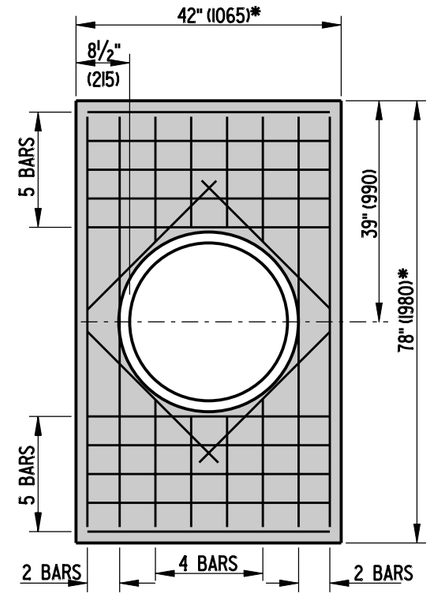

66" (1675) x 30" (760) MANHOLE

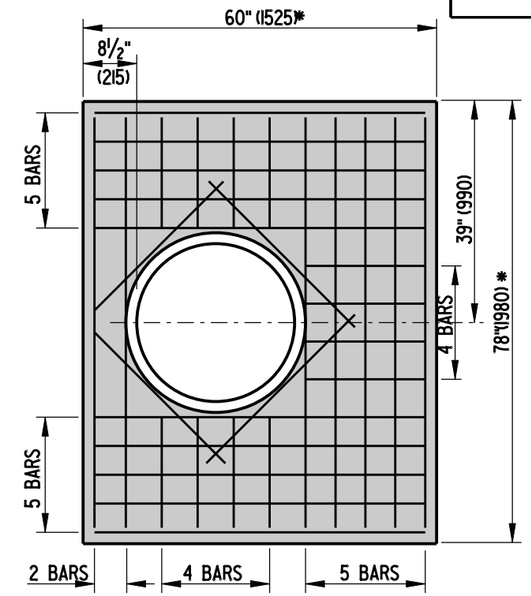

66" (1675) x 48" (1220) MANHOLE

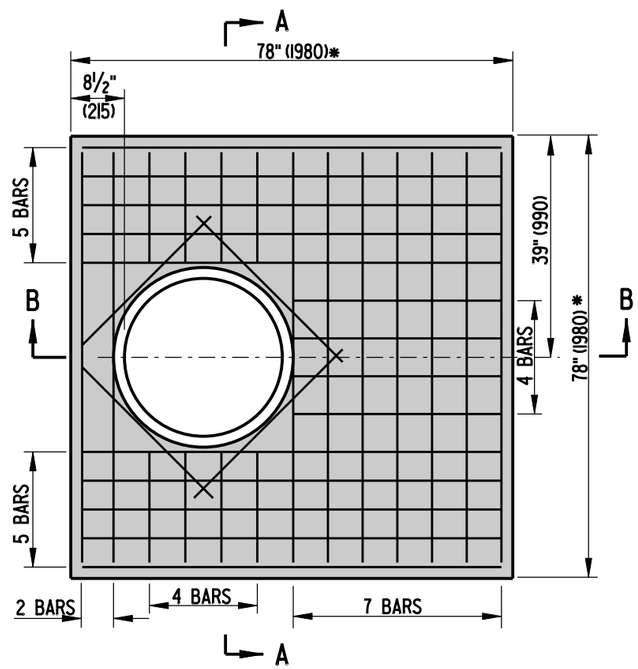

66" (1675) x 66" (1675) MANHOLE

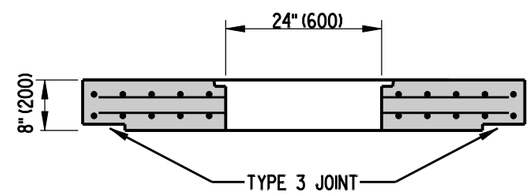

SECTION A-A

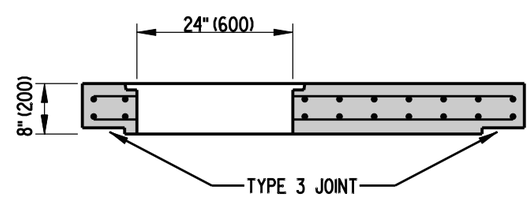

SECTION B-B

BOX MANHOLE COVER SLAB DETAILS

NOTES:

1. COVER SLABS SHALL BE PRE-CAST.
2. ALL BARS SHALL BE #5 (#16) SPACED AT 6" (150) ± UNLESS NOTED OTHERWISE.
3. MINIMUM BAR COVER = 1½" (38).

*- DIMENSIONS TO MATCH OUTSIDE TO OUTSIDE DIMENSIONS OF BOX.

DELAWARE DEPARTMENT OF TRANSPORTATION	MANHOLE DETAILS		APPROVED CHIEF ENGINEER — DATE 10/24/07
	STANDARD NO. D-6 (2007)	SHT. 4 OF 4	RECOMMENDED DESIGN ENGINEER — DATE 10/23/07

08/01/2007

SCALE : N.T.S.

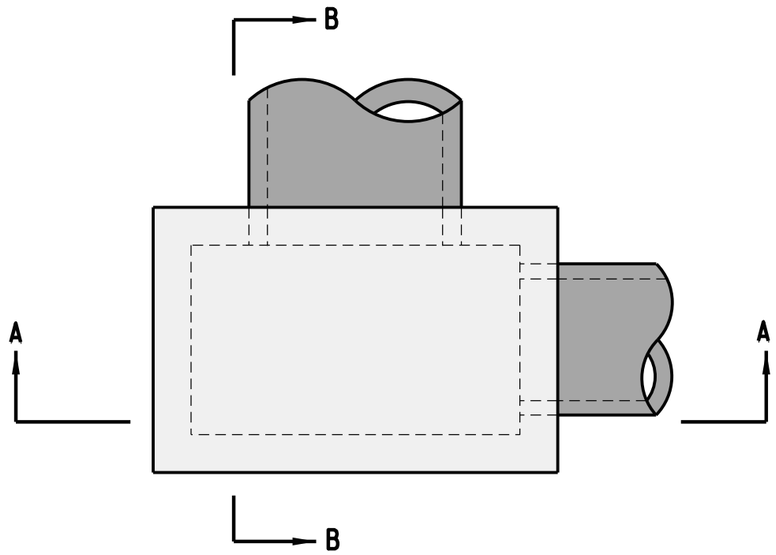

PLAN

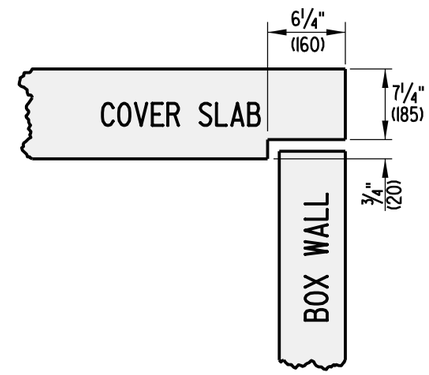

TYPE 3 JOINT DETAIL

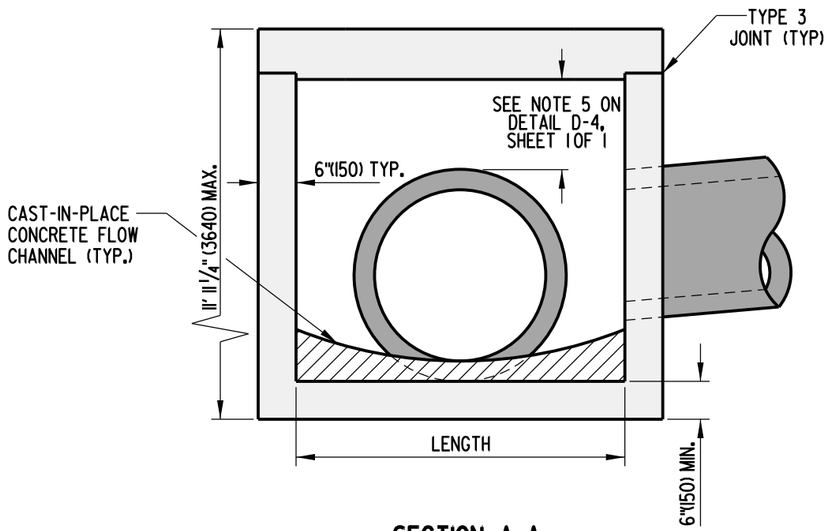

SECTION A-A

• - SEE OPTIONAL PIPE OPENING DETAIL ON STANDARD NO. D-4, SHEET 1 OF 1.

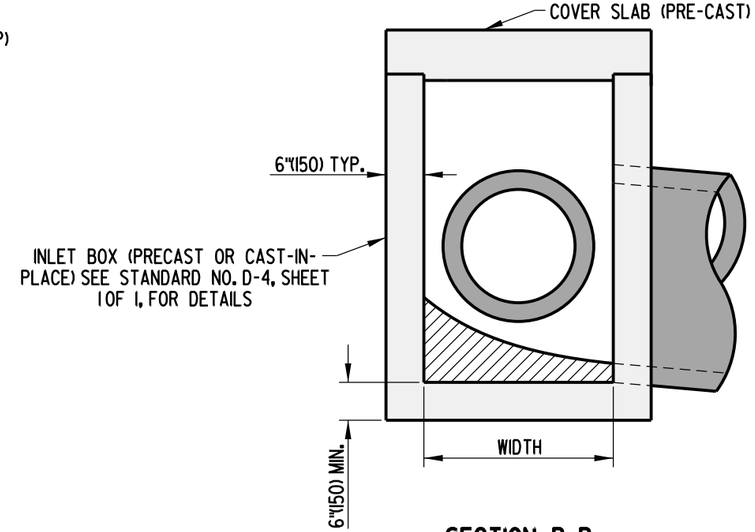

SECTION B-B

JUNCTION BOX ASSEMBLY

DELAWARE DEPARTMENT OF TRANSPORTATION	JUNCTION BOX DETAILS		APPROVED SIGNATURE ON FILE (CHIEF ENGINEER) 01/19/2010 (DATE)
	STANDARD NO. D-7 (2009)	SHT. 1 OF 2	RECOMMENDED SIGNATURE ON FILE (DESIGN ENGINEER) 01/14/2010 (DATE)

10/20/2009

SCALE : N.T.S.

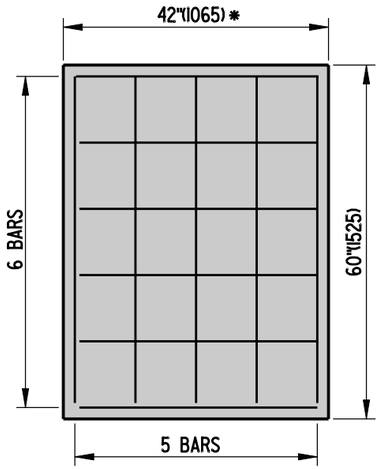

48" (1220) x 30" (760)
JUNCTION BOX

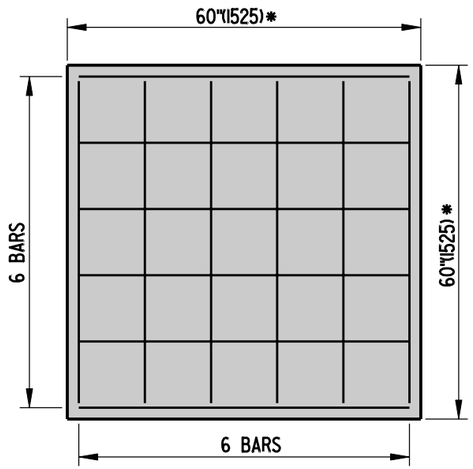

48" (1220) x 48" (1220)
JUNCTION BOX

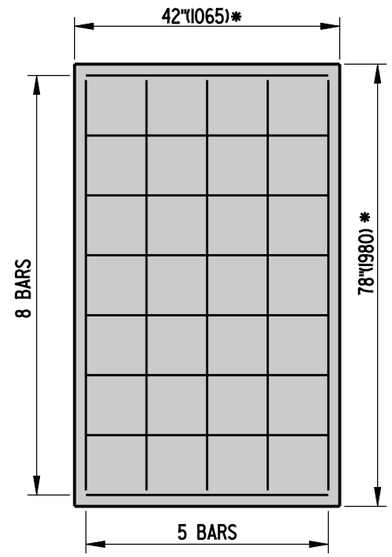

66" (1675) x 30" (760)
JUNCTION BOX

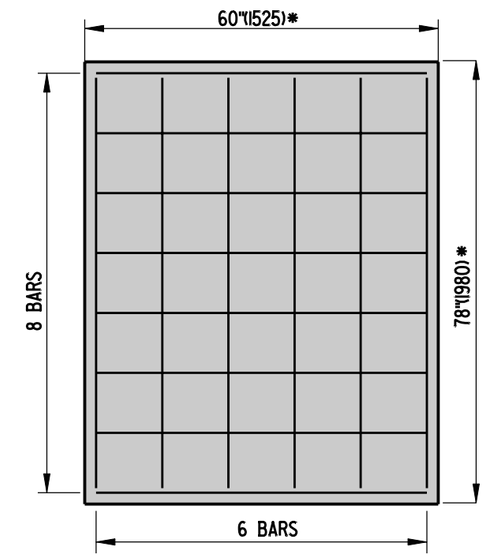

66" (1675) x 48" (1220)
JUNCTION BOX

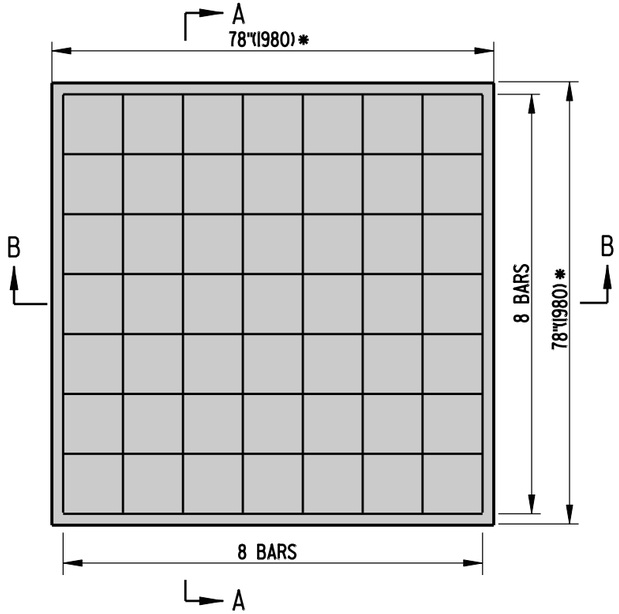

66" (1675) x 66" (1675)
JUNCTION BOX

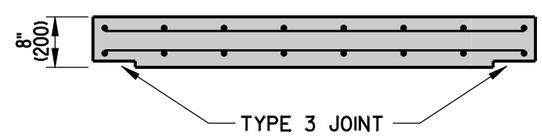

SECTION A-A

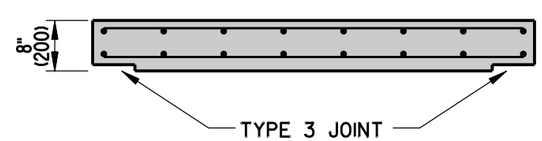

SECTON B-B

JUNCTION BOX COVER SLAB DETAILS

NOTES:

1. COVER SLABS ARE TO BE PRE-CAST.
2. ALL BARS ARE TO BE #5 (#16) SPACED @ 12" (305) ± UNLESS NOTED OTHERWISE.
3. MINIMUM BAR COVER = 1½" (38).

* - DIMENSIONS TO MATCH OUTSIDE TO OUTSIDE DIMENSIONS OF BOX.

DELAWARE DEPARTMENT OF TRANSPORTATION	JUNCTION BOX DETAILS		APPROVED CHIEF ENGINEER — DATE 10/24/07
	STANDARD NO. D-7 (2007)	SHT. 2 OF 2	RECOMMENDED DESIGN ENGINEER — DATE 10/23/07

08/01/2007

SCALE : N.T.S.

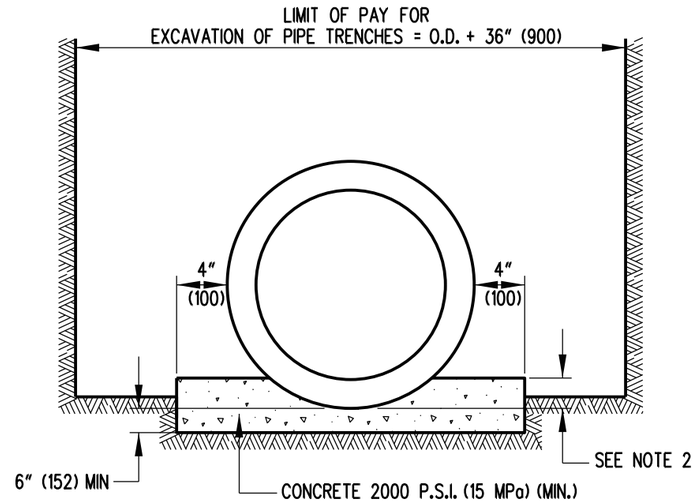

CLASS A BEDDING

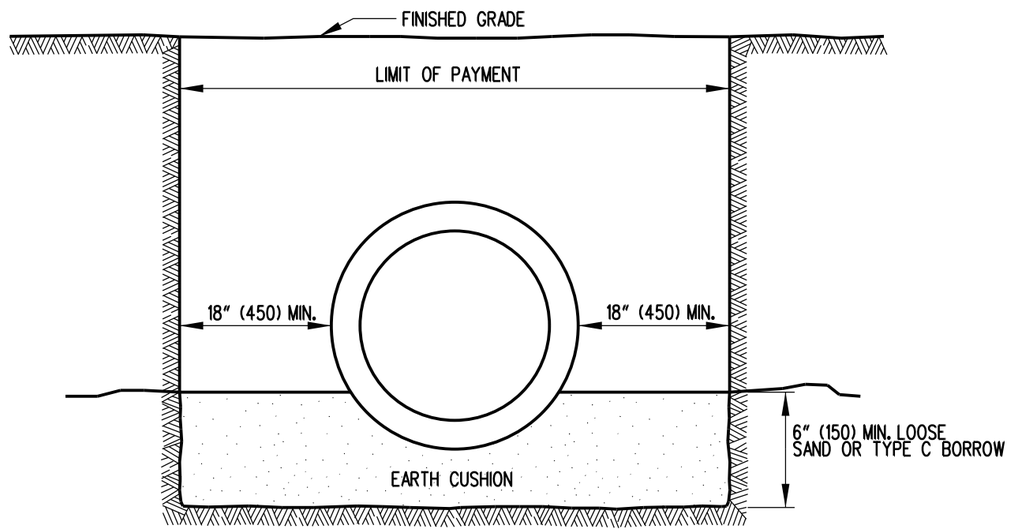

CLASS C BEDDING

NOTE:
1). USE CLASS C BEDDING UNLESS OTHERWISE INDICATED.
2). FOR CLASS A BEDDING, IMBED PIPE IN CONCRETE 6" (152) FOR PIPES SMALLER THAN 24" (610) I.D., 10" (255) FOR PIPES 24" (610) TO 60" (1525), AND FOR PIPES LARGER THAN 60" (1525) SEE PROJECT DETAILS.

DELAWARE DEPARTMENT OF TRANSPORTATION	PIPE BEDDING		APPROVED SIGNATURE ON FILE (CHIEF ENGINEER) 12/28/2010 (DATE)
	STANDARD NO. D-8 (2010)	SHT. 1 OF 1	RECOMMENDED SIGNATURE ON FILE (DESIGN ENGINEER) 12/27/2010 (DATE)

10/25/2010

SCALE : N.T.S.

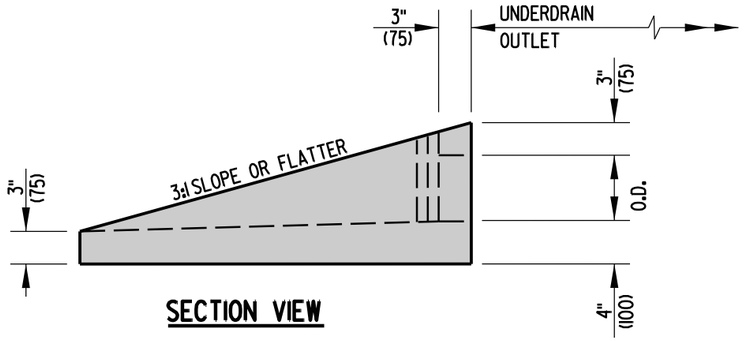

SECTION VIEW

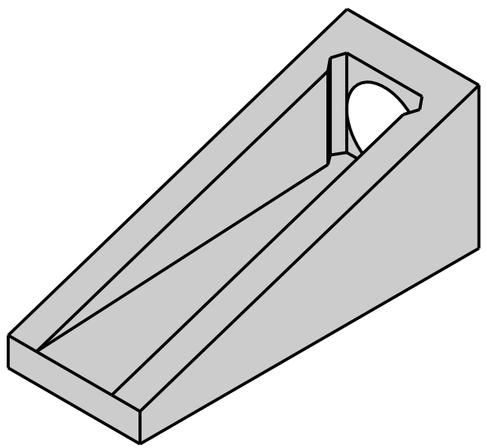

ISOMETRIC VIEW

UNDERDRAIN OUTLET

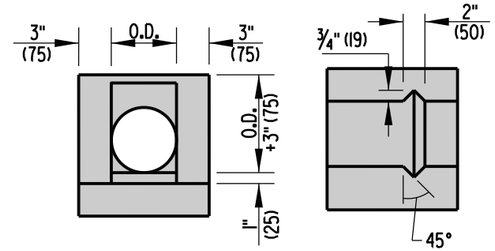

FRONT VIEW

TOP VIEW

SLOTTED HEADWALL DETAIL

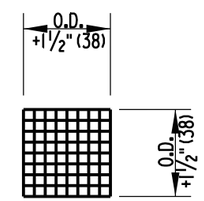

FRONT VIEW

RODENT SCREEN

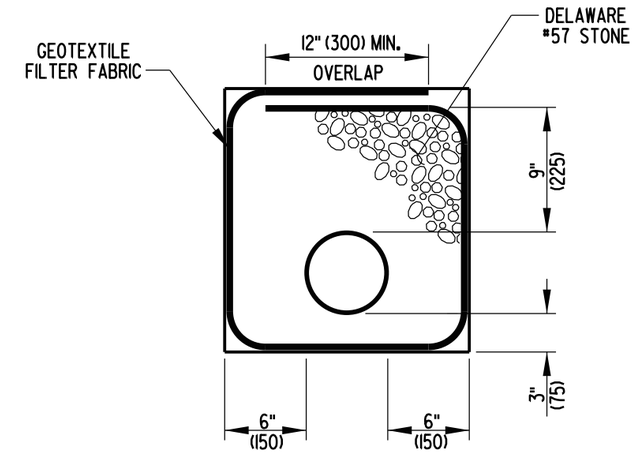

SECTION

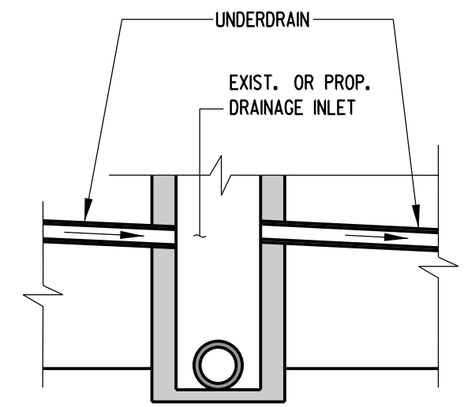

ELEVATION

PERFORATED PIPE UNDERDRAIN

NOTES:

1). THE PERFORATED PIPE UNDERDRAIN SHALL BE LOCATED AS SHOWN ON THE TYPICAL SECTIONS OF THE CONSTRUCTION PLANS.
2). GEOTEXTILE FILTER FABRIC SHALL BE PLACED ENTIRELY OVER THE TOP OF UNDERDRAIN TRENCH AND LAPPED AS SHOWN.
3). SLOPE OF UNDERDRAINS SHALL MATCH ROADWAY GRADE, UNLESS OTHERWISE DIRECTED BY THE ENGINEER.
4). OUTLET PIPE CONFIGURATIONS SHALL USE 45 DEGREE ELBOWS OR SHALL USE STRAIGHT PIPE WITH A MINIMUM RADIUS OF 3' (900) TO DIRECT UNDERDRAIN PIPE INTO SIDE OF DRAINAGE INLET OR TO POSITIVE GRADE. PIPE SHALL ALSO BE NON-PERFORATED AND HAVE A SMOOTH INTERIOR.
5). RODENT SCREEN SHALL SNUGLY FIT THE PROVIDED SLOT WITH THE SCREEN LIP FITTING TIGHT TO THE BOTTOM FLOW LINE.
6). A 4' (1200) FLEXIBLE DELINEATOR SHALL BE FURNISHED AND INSTALLED AT THE DIRECTION OF THE ENGINEER TO MARK THE LOCATION OF THE CONCRETE HEADWALL.
7). WHEN TWO LINES OF PIPE UNDERDRAIN DRAIN TO A LOW POINT, EACH PIPE MUST HAVE ITS OWN OUTLET.
8). PERFORATED PIPE UNDERDRAIN SHALL NOT BE PLACED UNDER GUARDRAIL IN ORDER TO AVOID PUNCTURING.

DELAWARE DEPARTMENT OF TRANSPORTATION	PERFORATED PIPE UNDERDRAIN DETAIL		APPROVED CHIEF ENGINEER — DATE 11/18/08
	STANDARD NO. D-9 (2008)	SHT. 1 OF 1	RECOMMENDED DESIGN ENGINEER — DATE 11/17/08

10/23/2008

SCALE : NTS

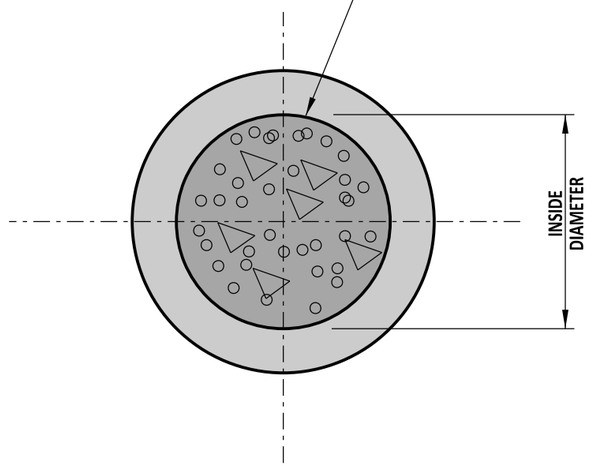

SECTION

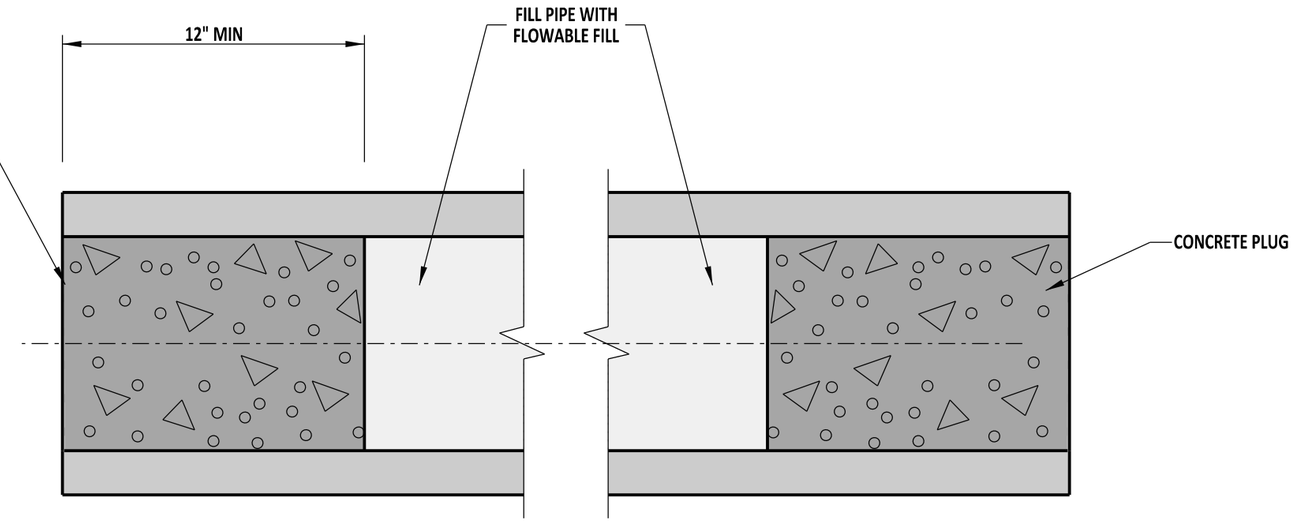

ELEVATION

NOTE:
THE CONTRACTOR SHALL FURNISH MATERIAL AND PLUG ABANDONED DRAINAGE PIPES WITH CONCRETE AS DIRECTED BY THE ENGINEER.

DELAWARE DEPARTMENT OF TRANSPORTATION	PIPE PLUGGING DETAIL		APPROVED	SIGNATURE ON FILE (CHIEF ENGINEER) — 12/22/2011 (DATE)
	STANDARD NO. D-10 (2011)	SHT. 1 OF 1	RECOMMENDED	SIGNATURE ON FILE (DESIGN ENGINEER) — 12/21/2011 (DATE)

04/27/2011

SCALE : N.T.S.

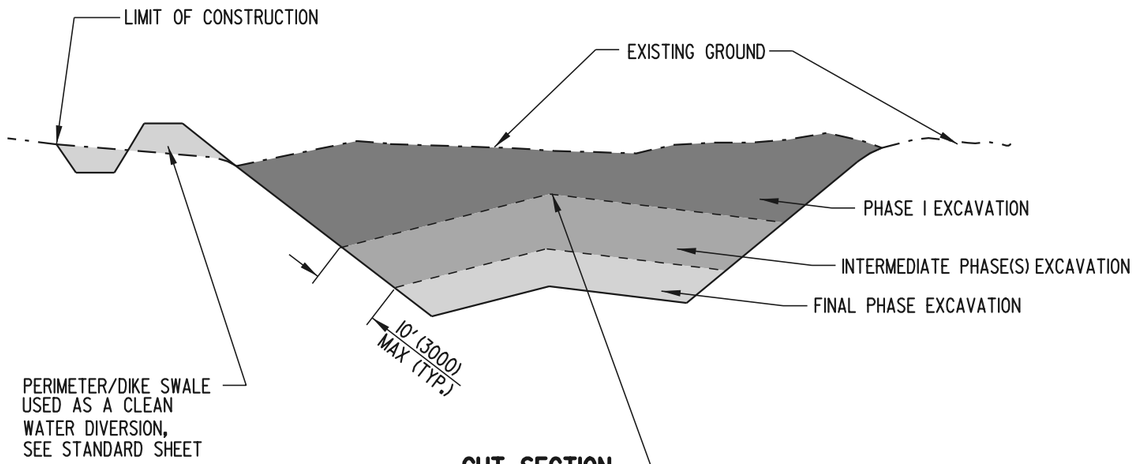

CUT SECTION

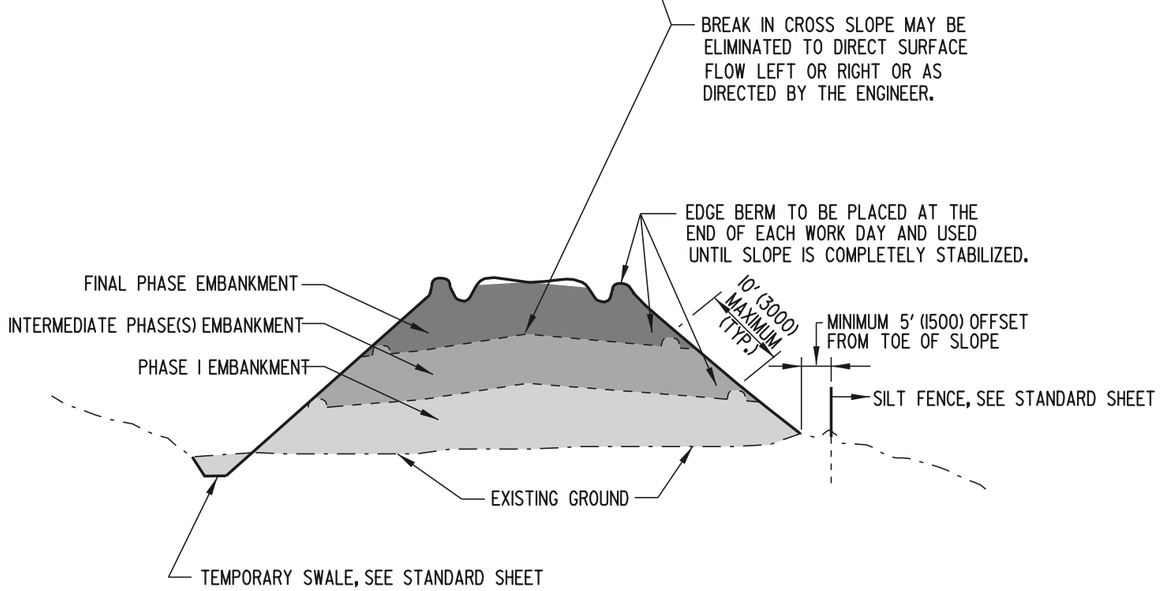

FILL SECTION

NOTES: 1.) EDGE BERMS AND TEMPORARY SLOPE DRAINS SHALL BE CONSTRUCTED ALONG THE TOP OF ALL SLOPES TO INTERCEPT RUNOFF AND CONVEY IT DOWN THE SLOPE FACES WITHOUT CREATING GULLIES OR WASHOUTS.

2.) SLOPE FACES SHALL BE TRACKED WITH CLEATED EQUIPMENT SUCH THAT THE CLEAT MARKS ARE ORIENTED HORIZONTALLY.

3.) ALL CUT AND FILL SLOPES OF THE HIGHWAY EMBANKMENT SHALL BE PERMANENTLY STABILIZED AS THE WORK PROGRESSES IN INCREMENTS NOT TO EXCEED 10' (3000) MEASURED ALONG THE SLOPE.

4.) CROSS SLOPES SHALL BE 2% MINIMUM, 6% MAXIMUM.

DELAWARE DEPARTMENT OF TRANSPORTATION	INCREMENTAL STABILIZATION		APPROVED [signature] CHIEF ENGINEER 6/18/01 DATE
	STANDARD NO. E-1 (2001)	SHT. 1 OF 1	RECOMMENDED [signature] DESIGN ENGINEER 6/15/01 DATE

05/30/2001

SCALE : N.T.S.

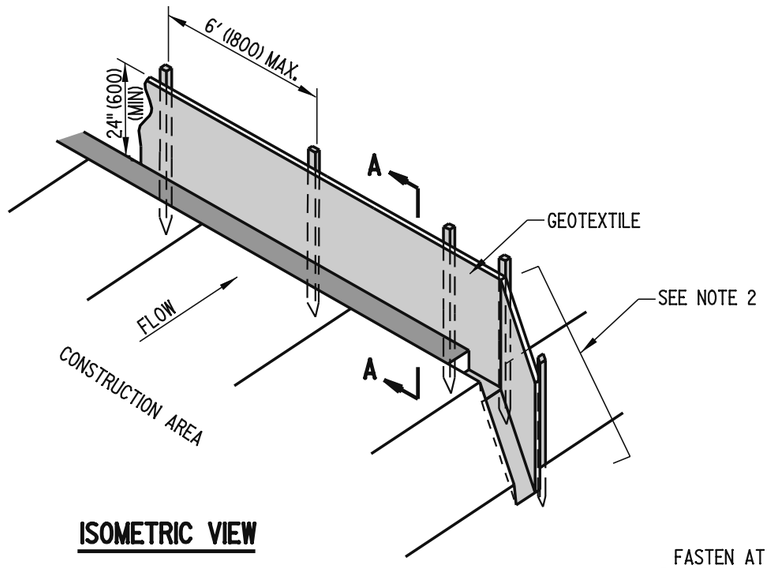

ISOMETRIC VIEW

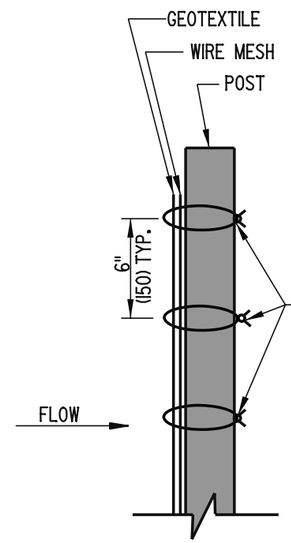

SECTION B-B

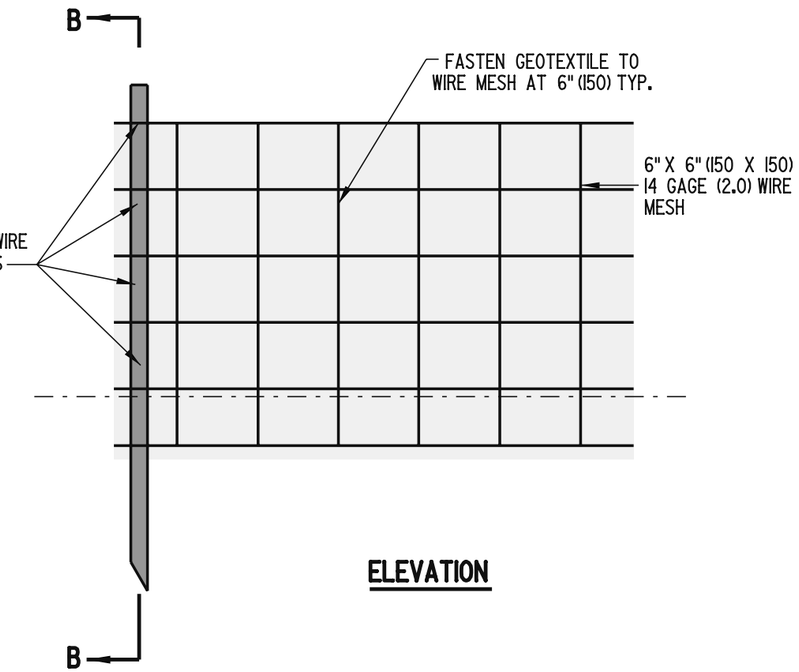

ELEVATION

WIRE MESH DETAIL
(REINFORCED SILT FENCE ONLY)

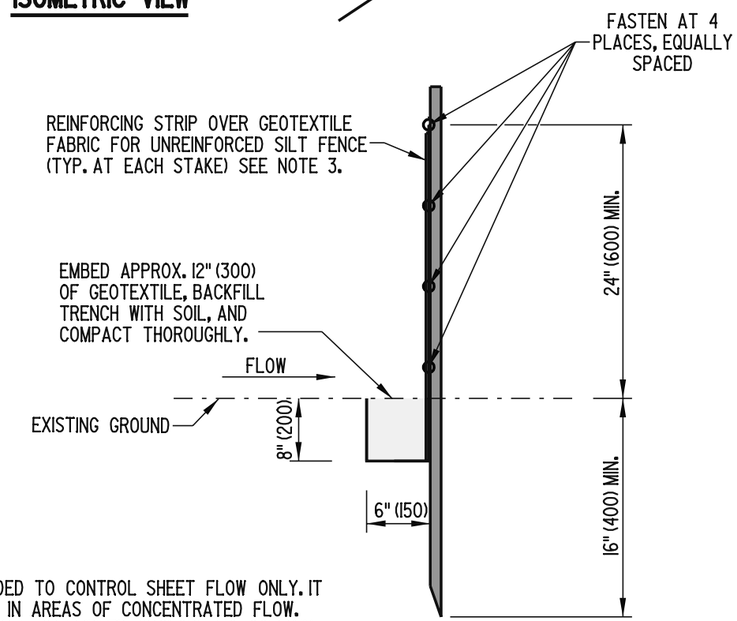

SECTION A-A

NOTES:

1). THIS DEVICE IS INTENDED TO CONTROL SHEET FLOW ONLY. IT SHALL NOT BE USED IN AREAS OF CONCENTRATED FLOW.
2). SILT FENCE ENDS SHALL BE TURNED UPSLOPE TO CONTAIN RUNOFF.
3). REINFORCING STRIP IS TO BE ONE COMPLETE STRIP COVERING ALL GEOTEXTILE FABRIC AT POST.

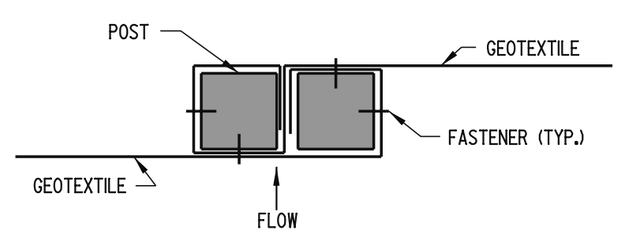

UNREINFORCED SILT FENCE CONNECTON DETAIL

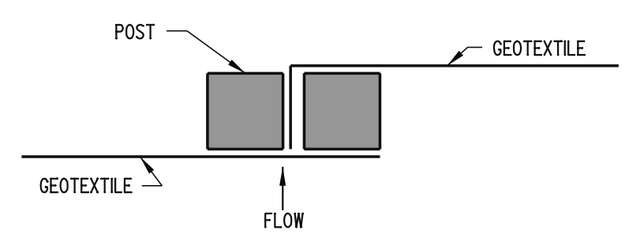

REINFORCED SILT FENCE CONNECTON DETAIL

DELAWARE DEPARTMENT OF TRANSPORTATION	SILT FENCE		APPROVED CHIEF ENGINEER 10/10/06 DATE
	STANDARD NO. E-2 (2006)	SHT. 1 OF 1	RECOMMENDED DESIGN ENGINEER 10/9/06 DATE

10/02/2006

SCALE : N.T.S.

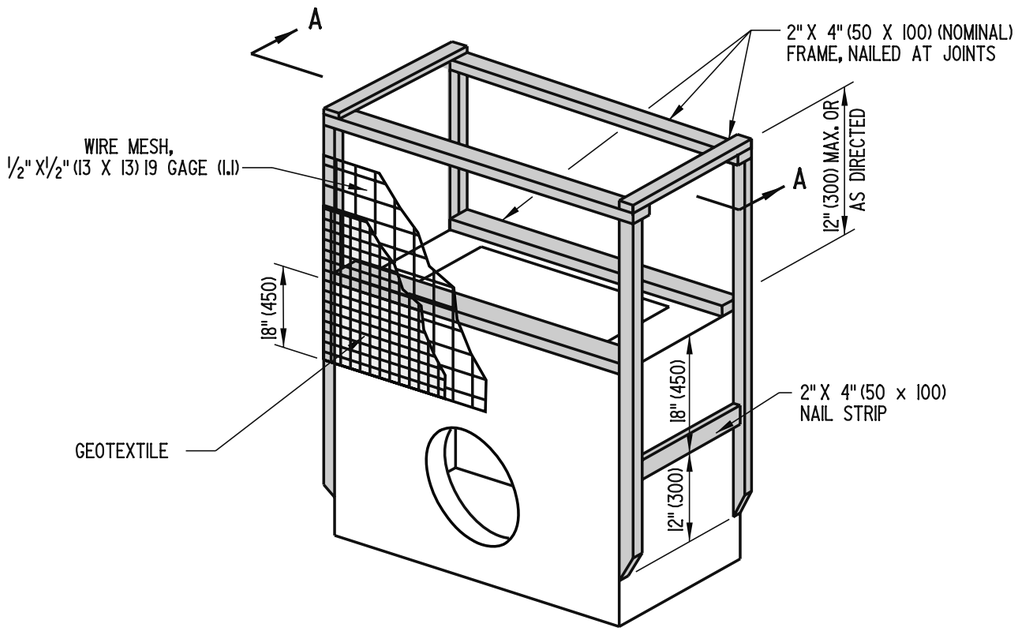

ISOMETRIC VIEW

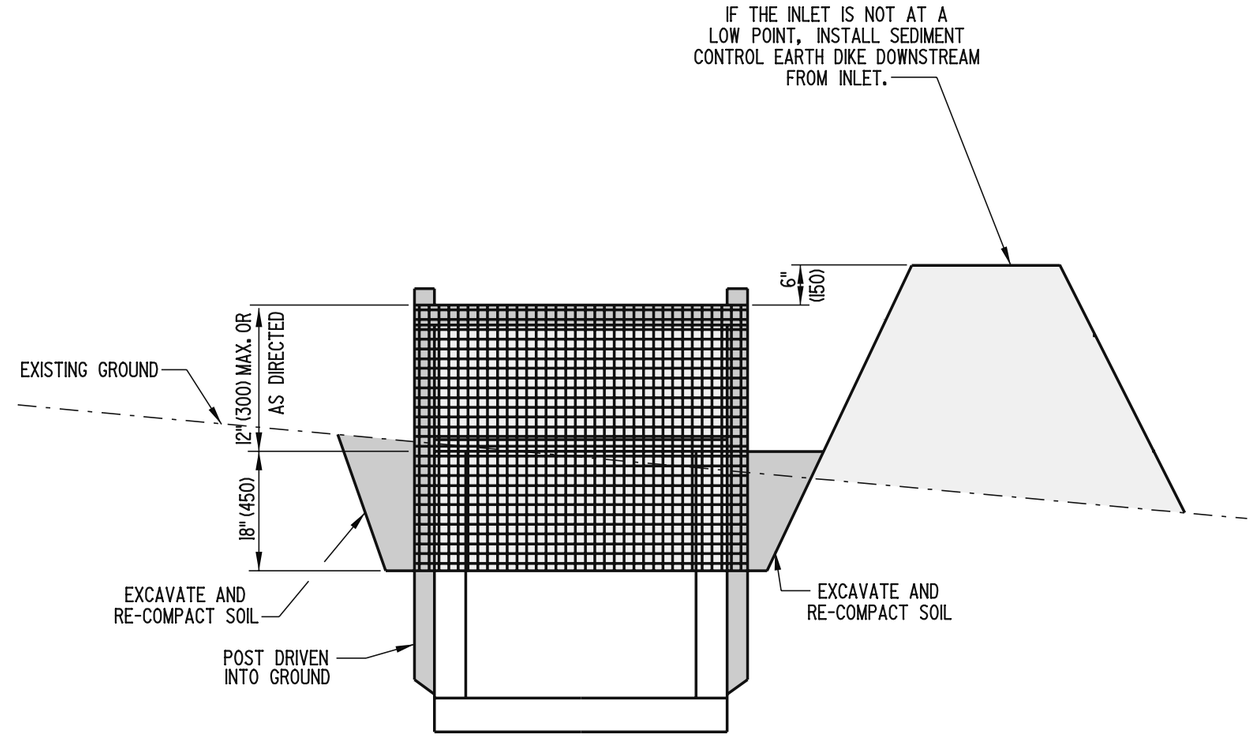

SECTION A-A

DELAWARE DEPARTMENT OF TRANSPORTATION	DRAINAGE INLET SEDIMENT CONTROL		APPROVED Carolann Wicks CHIEF ENGINEER 12/5/05 DATE
	STANDARD NO. E-3 (2005)	SHT. 1 OF 1	RECOMMENDED [signature] DESIGN ENGINEER 11/29/05 DATE

01/19/2006

SCALE : N.T.S.

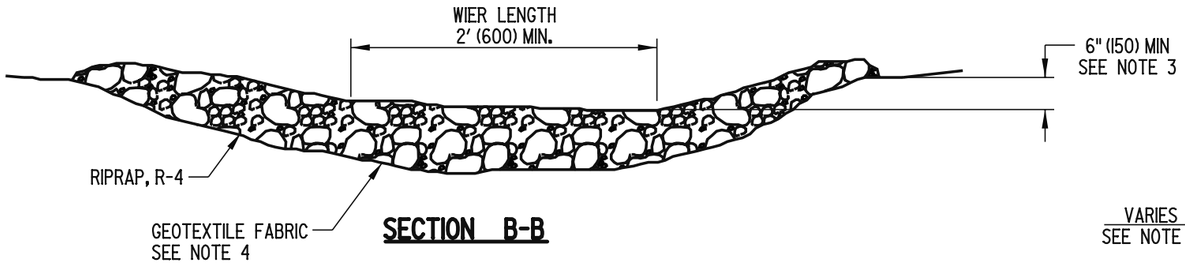

SECTION B-B

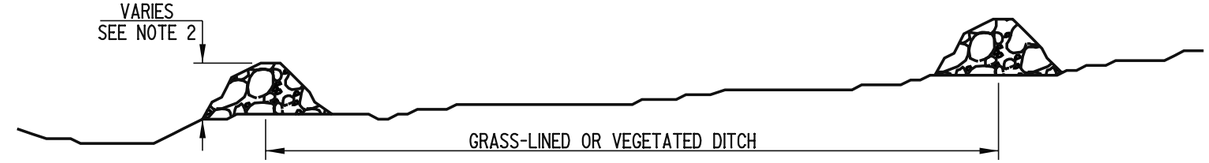

SECTION A-A

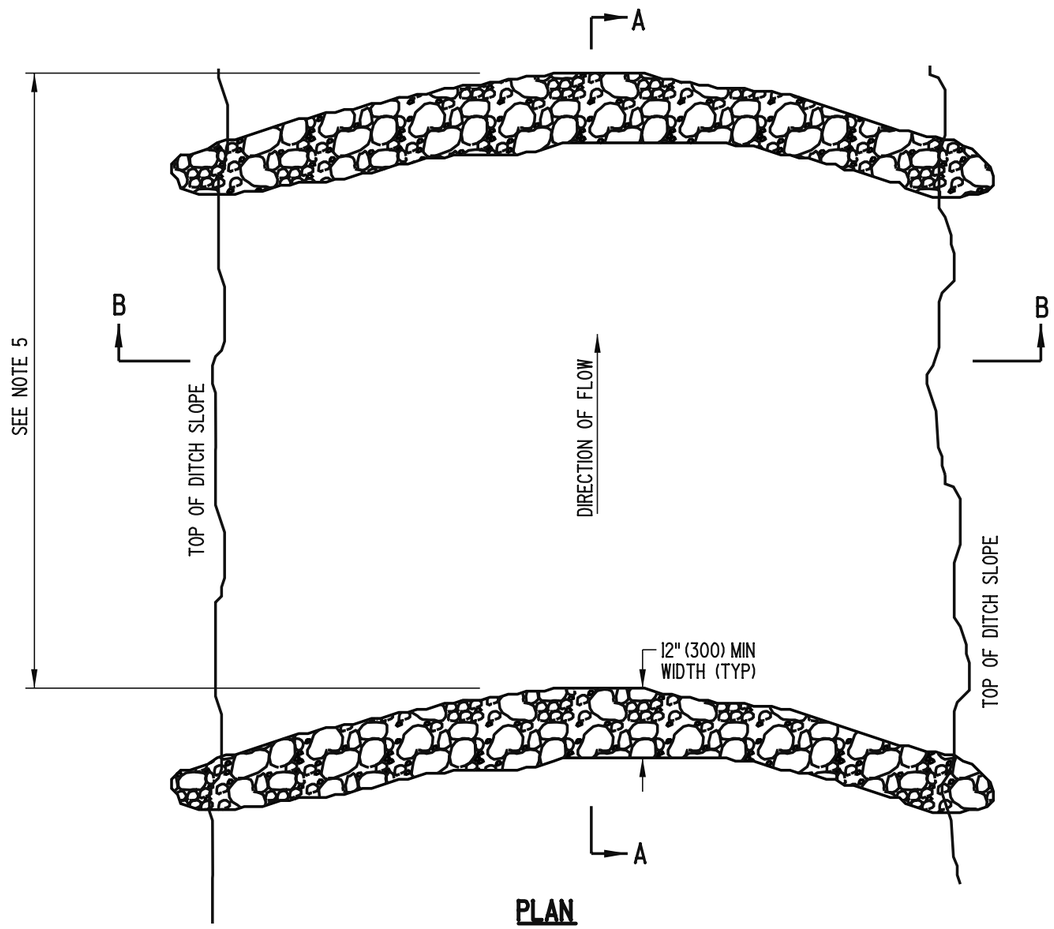

PLAN

NOTES:

1). FOR DITCHES LESS THAN 30" (750) IN DEPTH, PLACE DAM AS DIRECTED BY THE ENGINEER.
2). THE CHECK DAM HEIGHT MUST NOT EXCEED 2' (600) AT THE CENTER OF THE WEIR.
3). THE CHECK DAM IS TO BE CONSTRUCTED SO THAT THE CENTER IS 6" (150) MIN. LOWER THAN THE OUTER EDGES, FORMING A WEIR THAT WATER CAN FLOW ACROSS.
4). GEOTEXTILE FABRIC IS TO BE INSTALLED UNDERNEATH RIPRAP ON PERMANENT CHECK DAMS ONLY.
5). THE MAXIMUM SPACING BETWEEN DAMS SHALL BE THE DISTANCE IN THE DITCH WHERE THE TOE OF THE UPSTREAM DAM IS AT THE SAME ELEVATION AS THE TOP OF THE DOWNSTREAM DAM AT THE CENTER OF THE WEIR.

DELAWARE DEPARTMENT OF TRANSPORTATION	STONE CHECK DAM		APPROVED CHIEF ENGINEER — DATE 10/10/06
	STANDARD NO. E-5 (2006)	SHT. 1 OF 1	RECOMMENDED DESIGN ENGINEER — DATE 10/9/06

08/14/2006

SCALE : N.T.S.

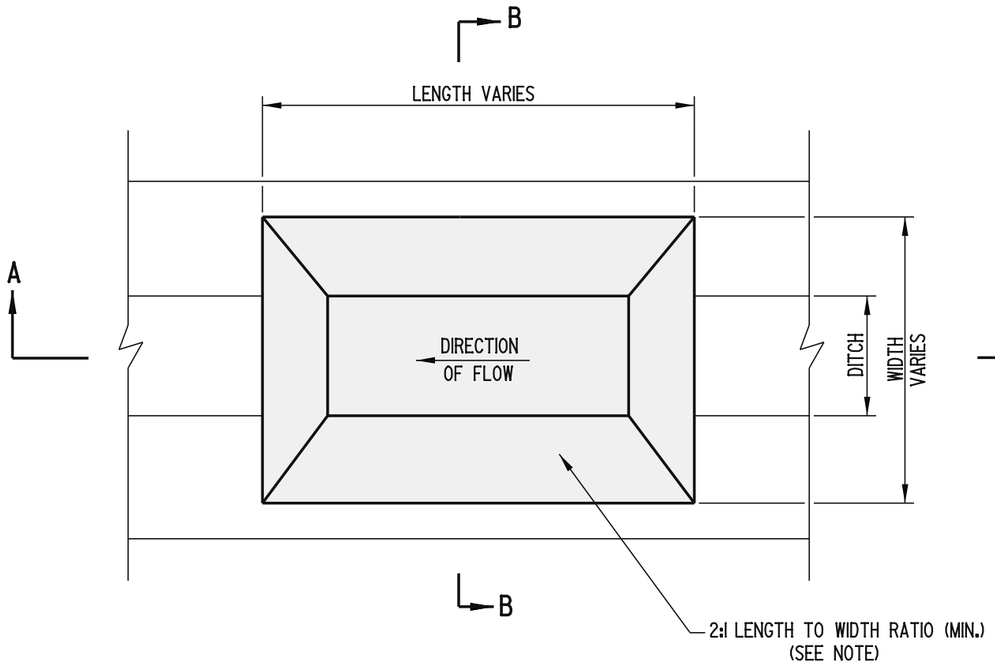

PLAN

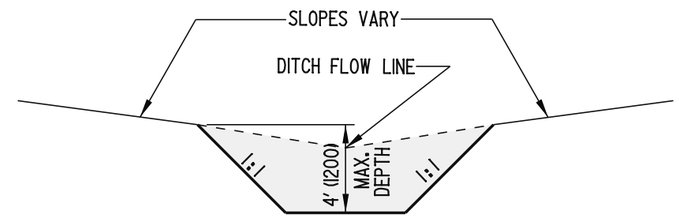

SECTION B-B

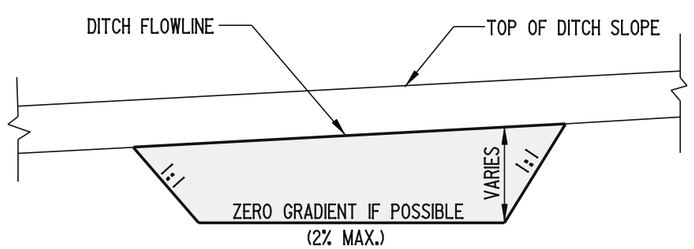

SECTION A-A

NOTES:

1). SEDIMENT TRAPS ARE INTENDED FOR USE IN EXISTING, PROPOSED, AND TEMPORARY DITCHES OF ALL TYPES WITH A MAXIMUM DRAINAGE AREA OF 15 ACRES (6 HECTARES), AS SHOWN ON PLANS OR AS DIRECTED BY THE ENGINEER.

2). SIDE SLOPES SHALL BE STABILIZED WITH "TEMPORARY GRASS SEEDING, DRY GROUND" AND STRAW MULCH.

3). AN OUTLET STRUCTURE IS REQUIRED. STONE CHECK DAMS, PERFORATED RISER PIPES, SKIMMER DEWATERING DEVICES, OR DRAINAGE INLETS MAY BE USED. SEE APPROPRIATE STANDARD SHEET FOR ADDITIONAL INFORMATION.

4). FOR SIZE, LOCATION, ETC. OF SEDIMENT TRAP, SEE CONSTRUCTION PHASING, M.O.T., AND EROSION CONTROL PLANS.

5). ALL FILL SLOPES SHALL BE 2:1.

6). A 2:1 LENGTH TO WIDTH RATIO SHOULD BE ACHIEVED WHERE POSSIBLE. IF THIS IS NOT POSSIBLE, THE USE OF BAFFLES OR OTHER SPECIAL DESIGNS SHOULD BE INCORPORATED TO INCREASE FLOW TIME.

DELAWARE DEPARTMENT OF TRANSPORTATION	SEDIMENT TRAP		APPROVED Carolann Wicks CHIEF ENGINEER — DATE 12/5/05
	STANDARD NO. E-6 (2005)	SHT. 1 OF 1	RECOMMENDED [illegible] DESIGN ENGINEER — DATE 11/29/05

08/19/2005

SCALE : N.T.S.

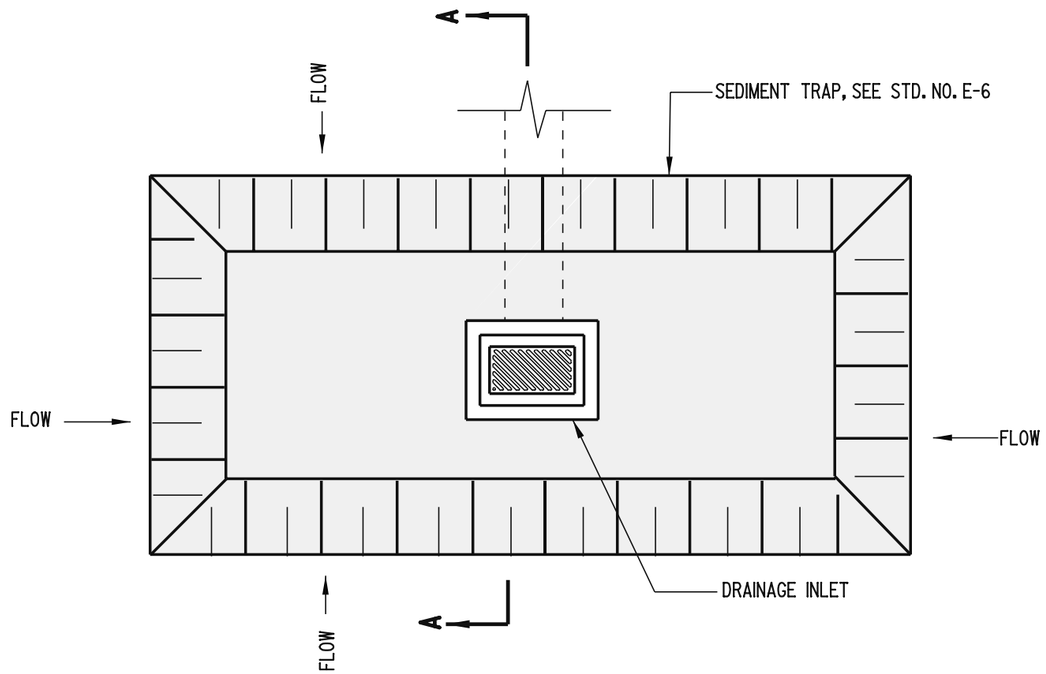

PLAN

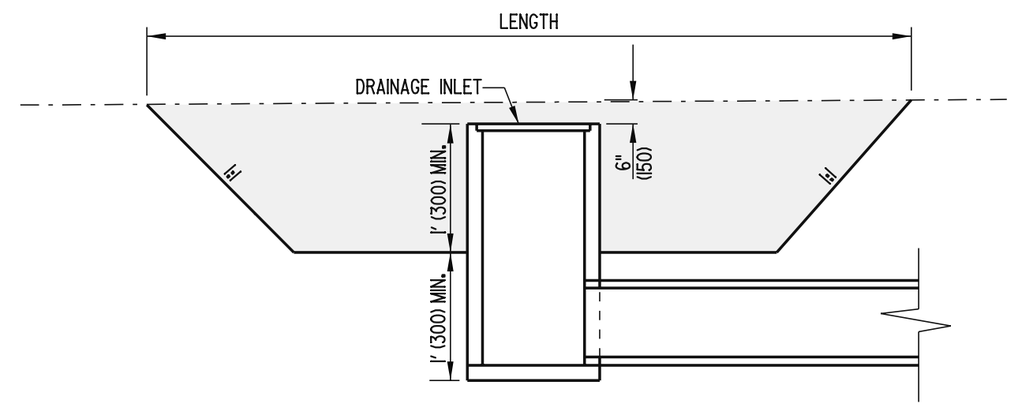

SECTION A-A

NOTES:

1). THE WORK SHALL CONSIST OF THE CONSTRUCTION OF A SEDIMENT TRAP AROUND A DRAINAGE INLET TO ALLOW SEDIMENTATION TO OCCUR BEFORE RUNOFF ENTERS THE DRAINAGE INLET.

2). DRAINAGE INLET SEDIMENT TRAPS SHALL BE LIMITED TO A THREE (3) ACRE (1.2 HECTRARE) MAXIMUM DRAINAGE AREA.

3). THE DIMENSIONS OF THE DRAINAGE INLET SEDIMENT TRAP ARE TO BE AS INDICATED ON THE PLANS OR AS DIRECTED BY THE ENGINEER.

DELAWARE DEPARTMENT OF TRANSPORTATION	SEDIMENT TRAP, USING DRAINAGE INLET AS OUTLET		APPROVED Carolann Wicks (CHIEF ENGINEER) 12/5/05 (DATE)
	STANDARD NO. E-7 (2005)	SHT. 1 OF 1	RECOMMENDED (DESIGN ENGINEER) 11/29/05 (DATE)

01/19/2006

SCALE : N.T.S.

MIN. ✳ OUTFALL PIPE DIA.	MIN. RISER DIA.	MAX. DRAINAGE AREA ACRES (ha)
12" (300)	15" (375)	1 (0.4)
15" (375)	18" (450)	2 (0.8)
18" (450)	21" (525)	3 (1.2)
21" (525)	24" (600)	4 (1.6)
24" (600)	27" (675)	5 (2.0)

✳ OUTFALL PIPE DIAMETER MAY BE SAME SIZE AS RISER DIAMETER.

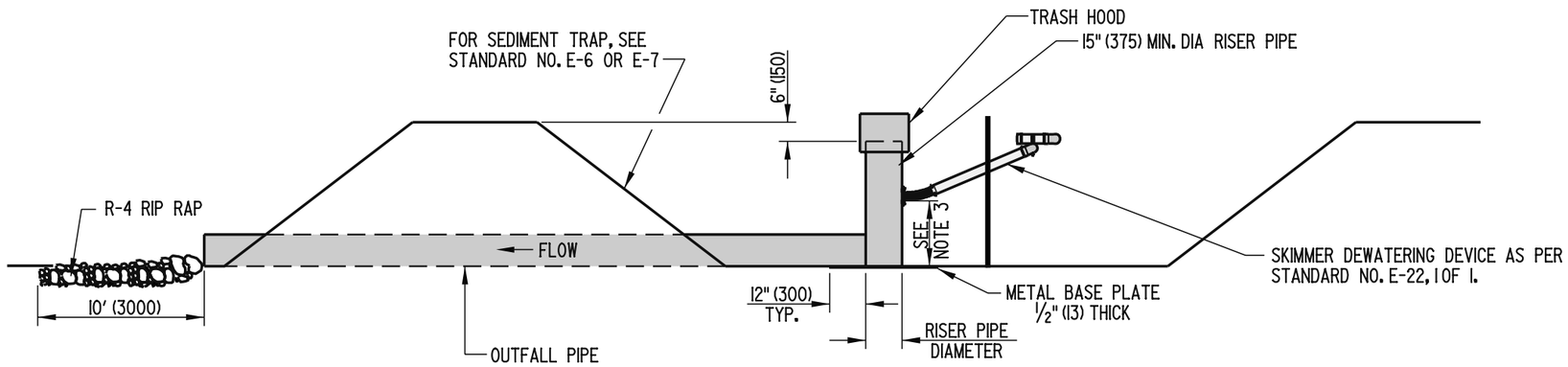

ELEVATION

NOTES:

1). THIS DEVICE IS INTENDED TO BE USED AS AN OUTLET FOR SEDIMENT TRAPS.
2). THE PIPE OUTLET SHOWN SHALL ONLY BE USED WITH SEDIMENT TRAPS WITH DRAINAGE AREAS OF 5 ACRES (2.0 HECTARES) OR LESS. LARGER DRAINAGE AREAS REQUIRE AN ENGINEERED DESIGN.
3). THE HEIGHT OF THE SKIMMER DEWATERING DEVICE SHALL BE SPECIFIED BY THE ENGINEER IN THE FIELD.

DELAWARE DEPARTMENT OF TRANSPORTATION	RISER PIPE ASSEMBLY FOR SEDIMENT TRAP		APPROVED CHIEF ENGINEER — DATE 10/10/06
	STANDARD NO. E-8 (2006)	SHT. 1 OF 2	RECOMMENDED DESIGN ENGINEER — DATE 10/9/06

10/02/2006

SCALE : N.T.S.

TRASH HOOD CHART					
RISER PIPE DIAMETER	D	H	TRASH HOOD THICK. (GAGE)	MINIMUM SIZE SUPPORT BAR	MINIMUM TOP THICK. (GAGE)
15" (375)	21" (525)	7" (175)	16 (1.6)	#6 (#19) REBAR	16 (1.6)
18" (450)	27" (675)	8" (200)	16 (1.6)	#6 (#19) REBAR	16 (1.6)
21" (525)	30" (750)	11" (275)	16 (1.6)	#6 (#19) REBAR	16 (1.6)
24" (600)	36" (900)	13" (330)	16 (1.6)	#6 (#19) REBAR	14 (2.0)
27" (675)	42" (1050)	15" (380)	16 (1.6)	#6 (#19) REBAR	14 (2.0)
36" (900)	54" (1350)	17" (430)	14 (2.0)	#8 (#25) REBAR	12 (2.7)

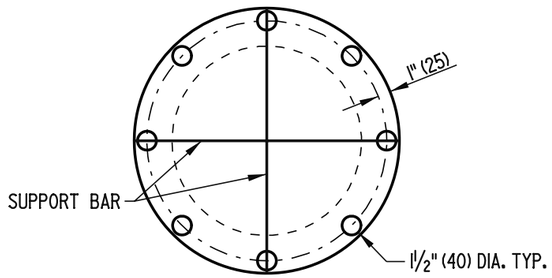

PLAN

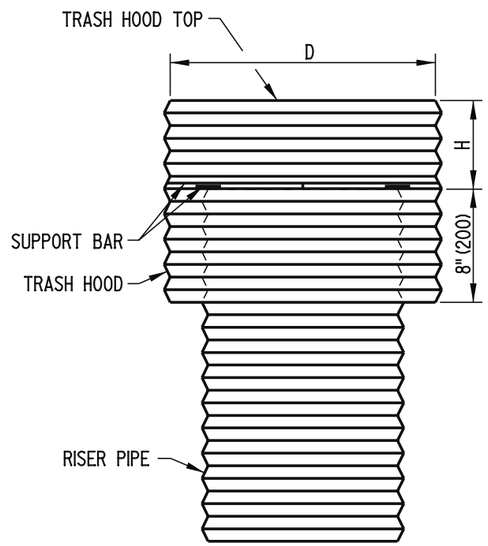

FRONT

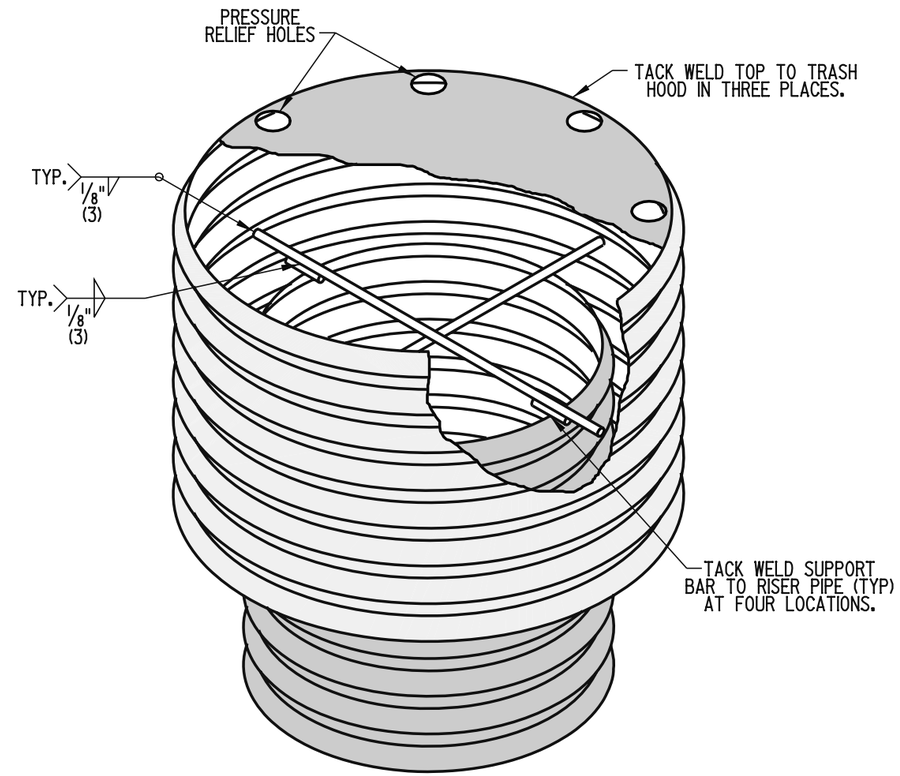

ISOMETRIC VIEW

TRASH HOOD DETAILS

DELAWARE DEPARTMENT OF TRANSPORTATION	RISER PIPE ASSEMBLY FOR SEDIMENT TRAP		APPROVED CHIEF ENGINEER DATE 10/10/06
	STANDARD NO. E-8 (2006)	SHT. 2 OF 2	RECOMMENDED DESIGN ENGINEER DATE 10/9/06

10/02/2006