SCALE : N.T.S.

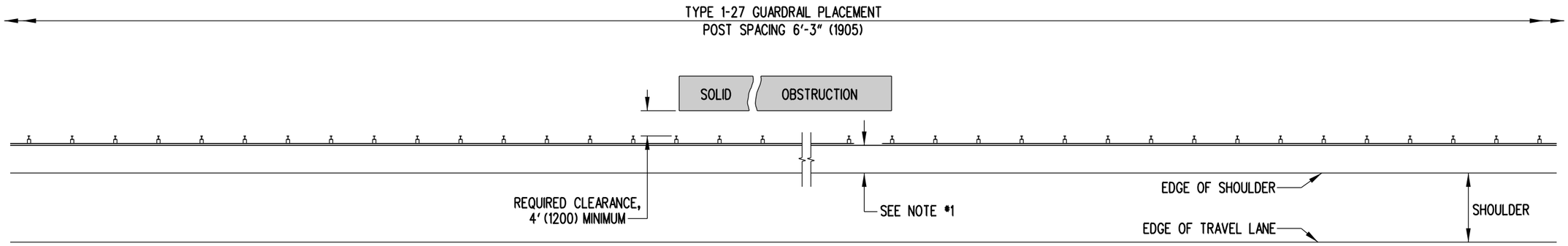

TYPE 1-27 GUARDRAIL

TYPICAL GUARDRAIL TREATMENT
WHEN THE REQUIRED 4' (1200) CLEARANCE TO OBSTRUCTION IS AVAILABLE

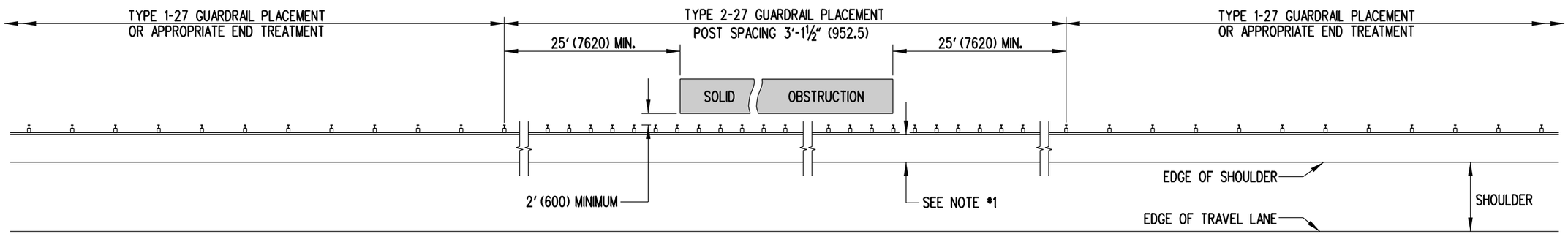

TYPE 2-27 GUARDRAIL

TYPICAL GUARDRAIL TREATMENT
WHEN 2' (600) TO 4' (1200) OF CLEARANCE TO OBSTRUCTION IS AVAILABLE

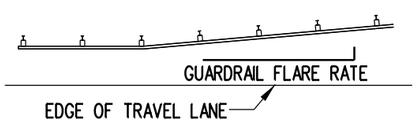

FLARE RATES	
DESIGN SPEED	FLARE RATE
70 MPH (110 km/h)	15:1
60 MPH (100 km/h)	14:1
55 MPH (90 km/h)	12:1
50 MPH (80 km/h)	11:1
45 MPH (70 km/h)	10:1
40 MPH (60 km/h)	9:1
30 MPH (50 km/h)	7:1

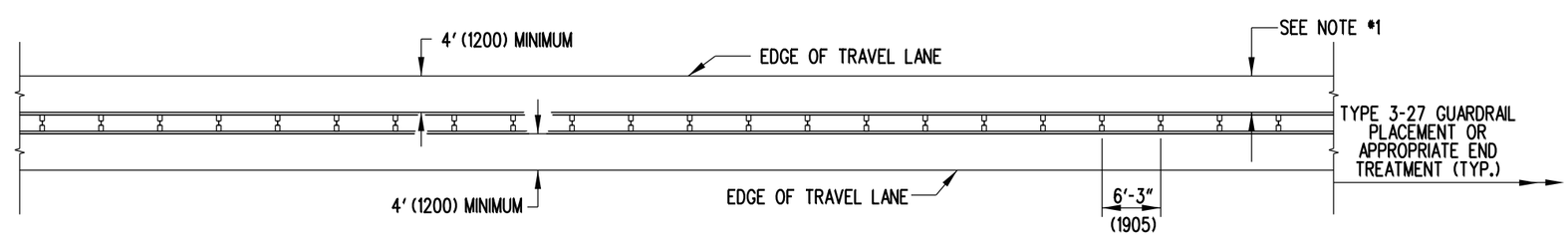

TYPE 3-27 GUARDRAIL

TYPICAL MEDIAN GUARDRAIL TREATMENT

NOTES:

1). THE DISTANCE FROM THE EDGE OF THE TRAVEL LANE OR SHOULDER TO THE FACE OF GUARDRAIL SHOULD BE MAXIMIZED. THIS AREA SHALL BE GRADED 10:1 OR FLATTER.

2). PLACE GUARDRAIL DELINEATORS AT THE INTERVALS SPECIFICIED IN THE DELAWARE MANUAL ON UNIFORM TRAFFIC CONTROL DEVICES.

DELAWARE DEPARTMENT OF TRANSPORTATION	GUARDRAIL APPLICATIONS		APPROVED SIGNATURE ON FILE (CHIEF ENGINEER) 12/28/2010 (DATE)
	STANDARD NO. B-15 (2010)	SHT. 1 OF 3	RECOMMENDED SIGNATURE ON FILE (DESIGN ENGINEER) 12/27/2010 (DATE)

09/03/2010

SCALE : N.T.S.

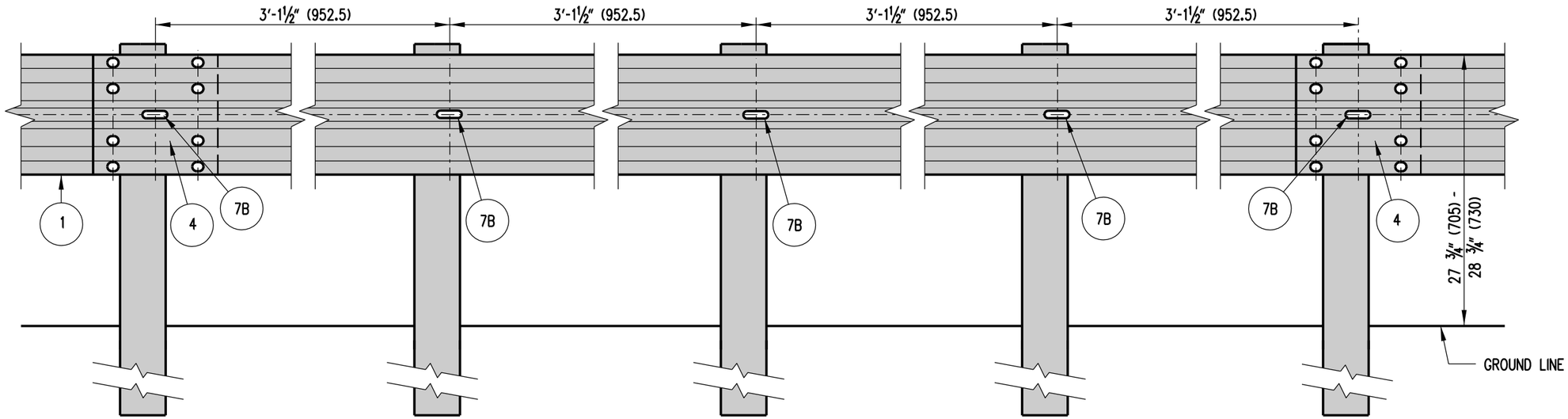

TYPE 2-27

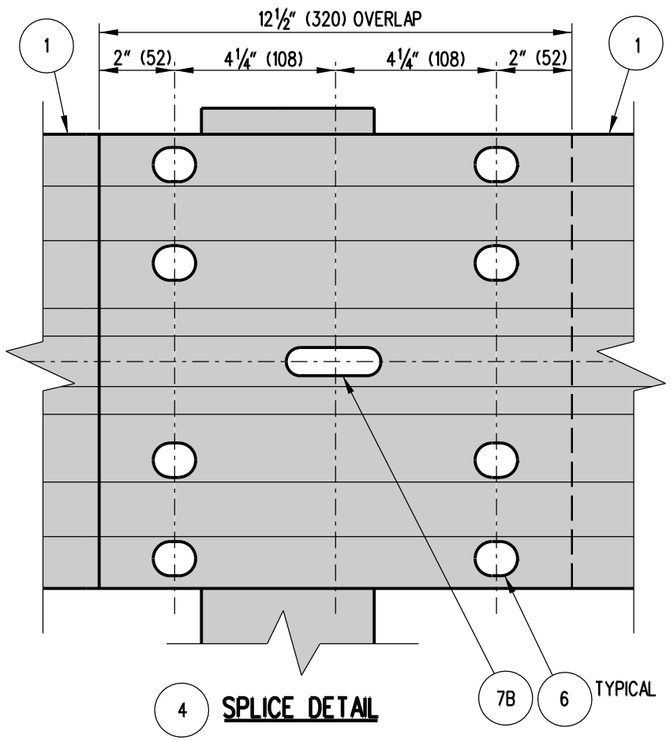

4 SPLICE DETAIL

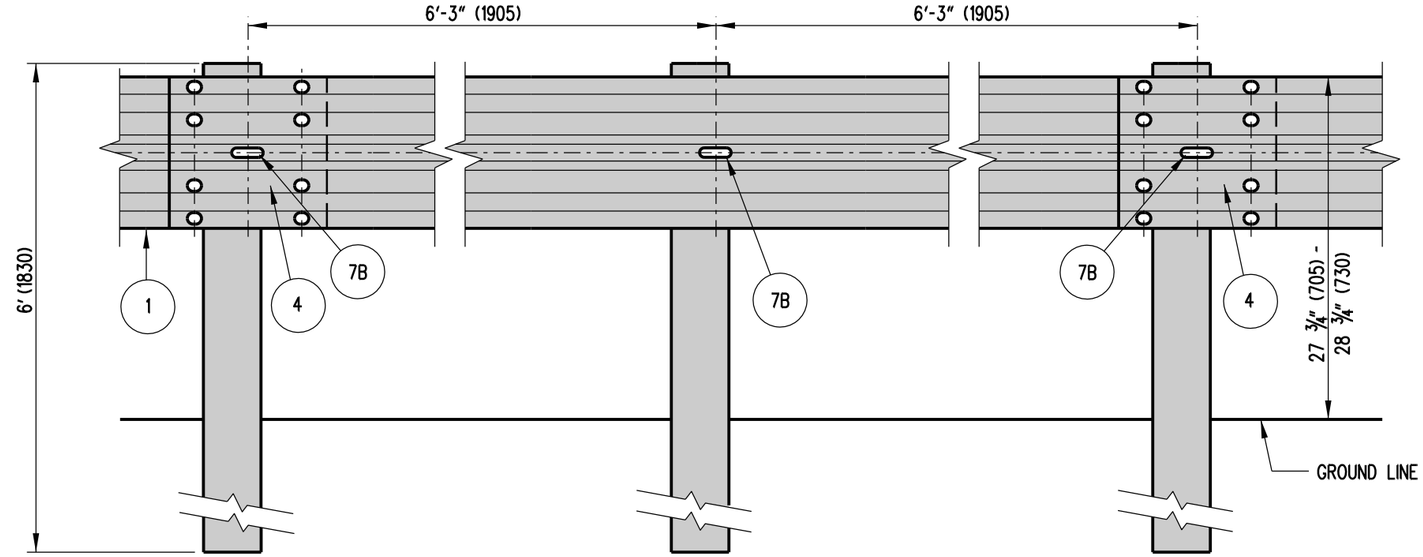

TYPE 1-27 OR 3-27

NOTE : OVERLAP W-BEAMS IN DIRECTION OF TRAVEL.

DELAWARE DEPARTMENT OF TRANSPORTATION	GUARDRAIL APPLICATIONS		APPROVED SIGNATURE ON FILE (CHIEF ENGINEER) 12/28/2010 (DATE)
	STANDARD NO. B-15 (2010)	SHT. 2 OF 3	RECOMMENDED SIGNATURE ON FILE (DESIGN ENGINEER) 12/27/2010 (DATE)

09/20/2010

SCALE : N.T.S.

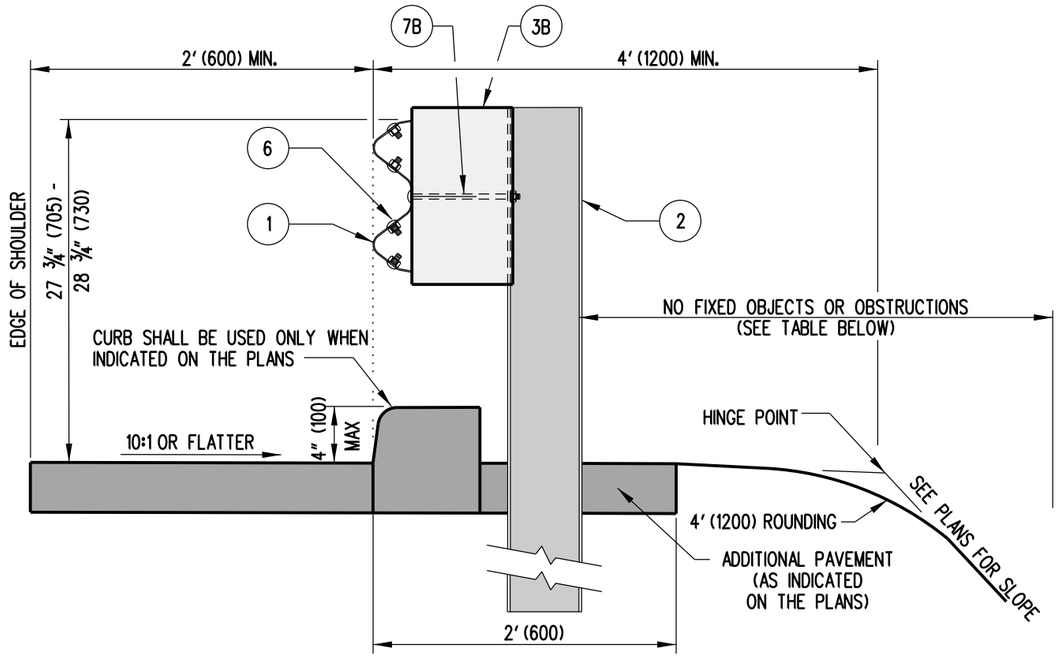

GUARDRAIL SECTION
RURAL SHOULDER APPLICATION

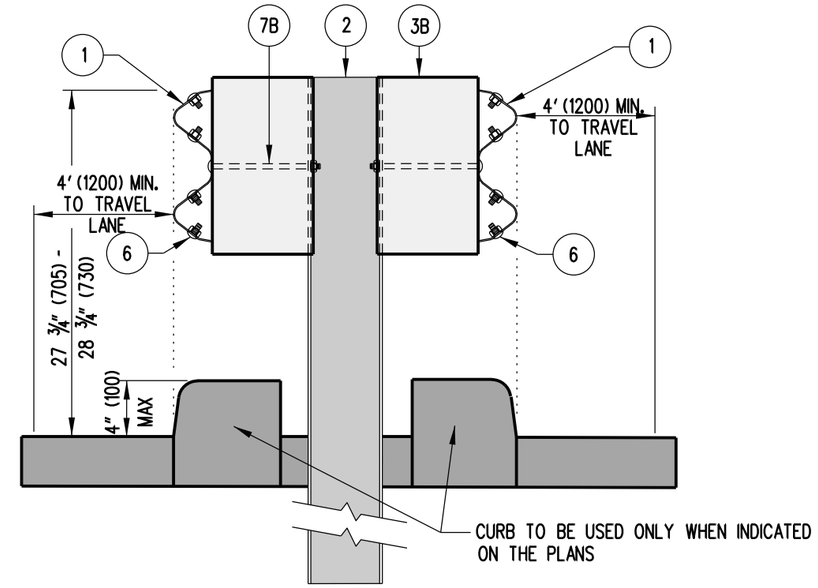

GUARDRAIL SECTION
MEDIAN APPLICATION

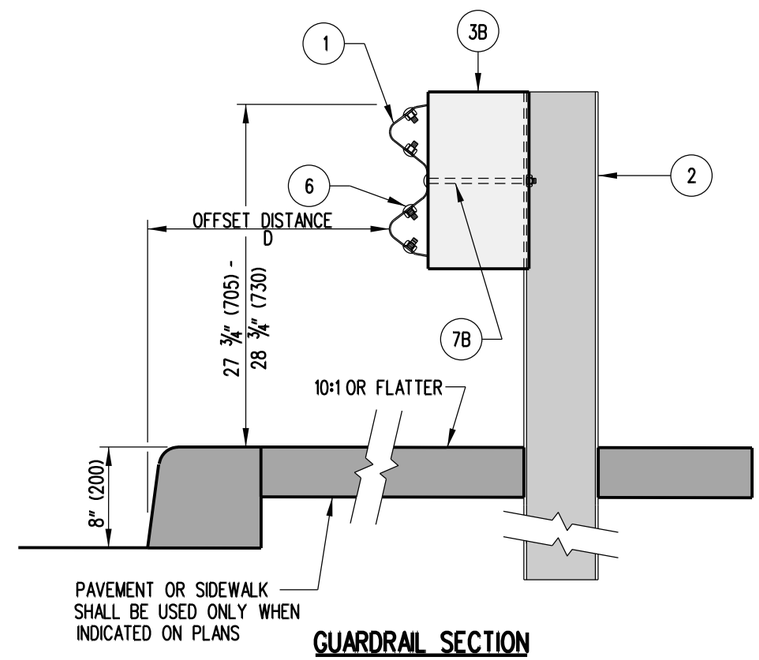

GUARDRAIL SECTION
URBAN SHOULDER APPLICATION

TYPE	POST SPACING	CLEAR AREA BEHIND POST
1	6′-3″ (1905)	4′-0″ (1.2m) MIN
2	3′ 1-½″ (952.5)	2′-0″ (600) MIN

DESIGN SPEED	D
< 50 MPH (80 km/h)	6′-0″ (1800)
≥ 50 MPH (80 km/h)	10′-0″ (3000)

DELAWARE DEPARTMENT OF TRANSPORTATION	GUARDRAIL APPLICATIONS		APPROVED SIGNATURE ON FILE (CHIEF ENGINEER) 12/28/2010 (DATE)
	STANDARD NO. B-15 (2010)	SHT. 3 OF 3	RECOMMENDED SIGNATURE ON FILE (DESIGN ENGINEER) 12/27/2010 (DATE)

09/20/2010

SCALE : N.T.S.

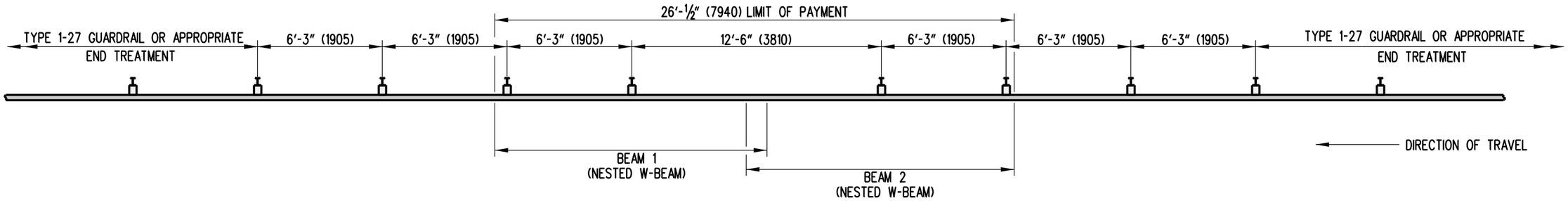

PLAN

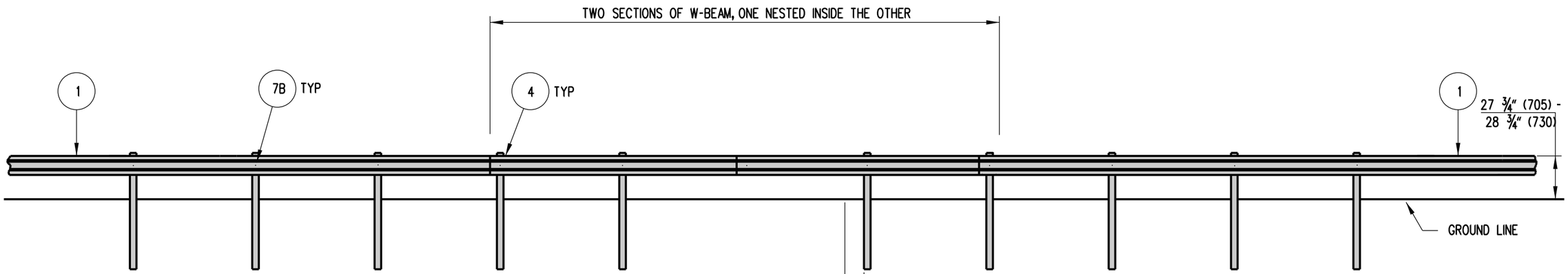

ELEVATION

NOTES:
1). ALL W-BEAMS ARE 13'-6½" (4130) IN LENGTH.
2). PLACE GUARDRAIL DELINEATORS AT THE INTERVALS SPECIFIED IN THE DELAWARE MANUAL ON UNIFORM TRAFFIC CONTROL DEVICES.

DELAWARE DEPARTMENT OF TRANSPORTATION	GUARDRAIL OVER CULVERTS, TYPE 1-27		APPROVED SIGNATURE ON FILE (CHIEF ENGINEER) 12/28/2010 (DATE)
	STANDARD NO. B-16 (2010)	SHT. 1 OF 3	RECOMMENDED SIGNATURE ON FILE (DESIGN ENGINEER) 12/27/2010 (DATE)

09/20/2010

SCALE : N.T.S.

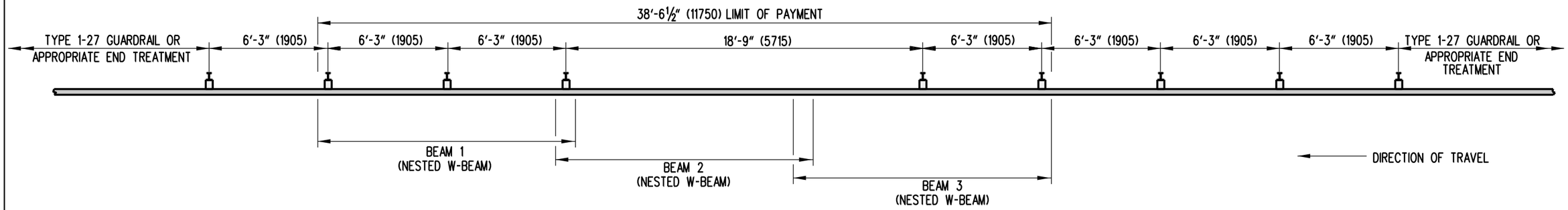

PLAN

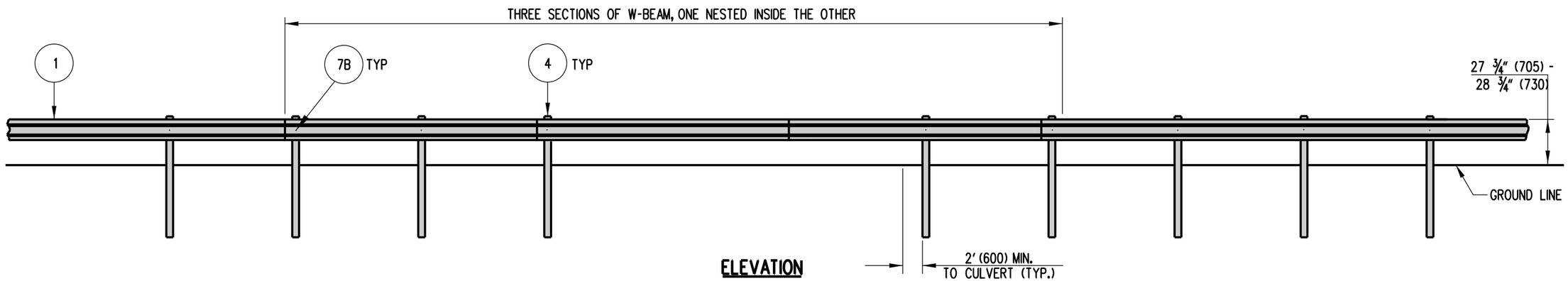

ELEVATION

NOTES:

1). ALL W-BEAMS ARE 13'-6½" (4130) IN LENGTH.
2). PLACE GUARDRAIL DELINEATORS AT THE INTERVALS SPECIFIED IN THE DELAWARE MANUAL ON UNIFORM TRAFFIC CONTROL DEVICES.

DELAWARE DEPARTMENT OF TRANSPORTATION	GUARDRAIL OVER CULVERTS, TYPE 2-27		APPROVED SIGNATURE ON FILE (CHIEF ENGINEER) 12/28/2010 (DATE)
	STANDARD NO. B-16 (2010)	SHT. 2 OF 3	RECOMMENDED SIGNATURE ON FILE (DESIGN ENGINEER) 12/27/2010 (DATE)

09/03/2010

SCALE : N.T.S.

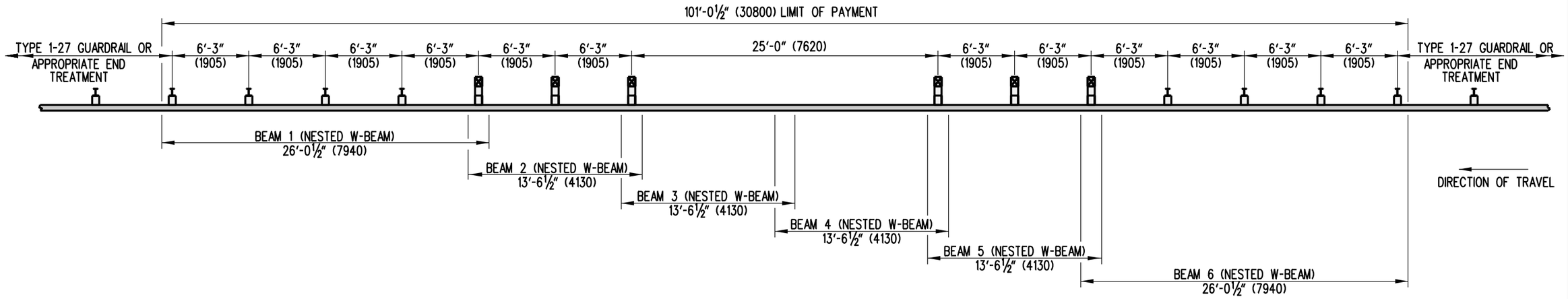

PLAN

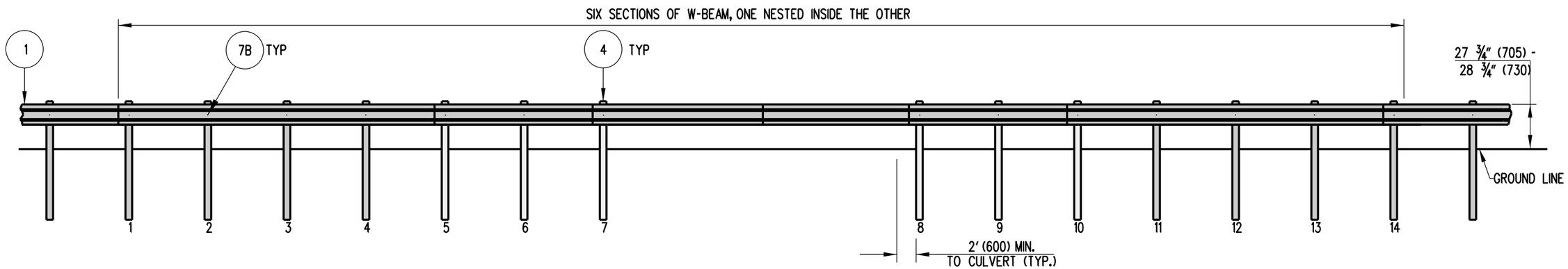

ELEVATION

NOTES:

1). PLACE GUARDRAIL DELINEATORS AT THE INTERVALS SPECIFIED IN THE DELAWARE MANUAL ON UNIFORM TRAFFIC CONTROL DEVICES.

2). POSTS 1-4 AND 11-14 ARE TO BE W6X9 (W15-X13.5) STEEL POSTS. POSTS 5-10 ARE TO BE 6"x8"x6' (150x200x1830) BREAKAWAY WOOD POSTS WITH 2 WOOD BLOCKS AT EACH OF THESE 6 POSTS.

3). THE SPLICES AT POSTS 5, 7, 8, & 10 ARE TO USE ⅝" (16) GUARDRAIL BOLT (L=26" (660)).

DELAWARE DEPARTMENT OF TRANSPORTATION	GUARDRAIL OVER CULVERT, TYPE 3-27		APPROVED SIGNATURE ON FILE (CHIEF ENGINEER) 12/28/2010 (DATE)
	STANDARD NO. B-16 (2010)	SHT. 3 OF 3	RECOMMENDED SIGNATURE ON FILE (DESIGN ENGINEER) 12/27/2010 (DATE)

10/14/2010

SCALE : N.T.S.

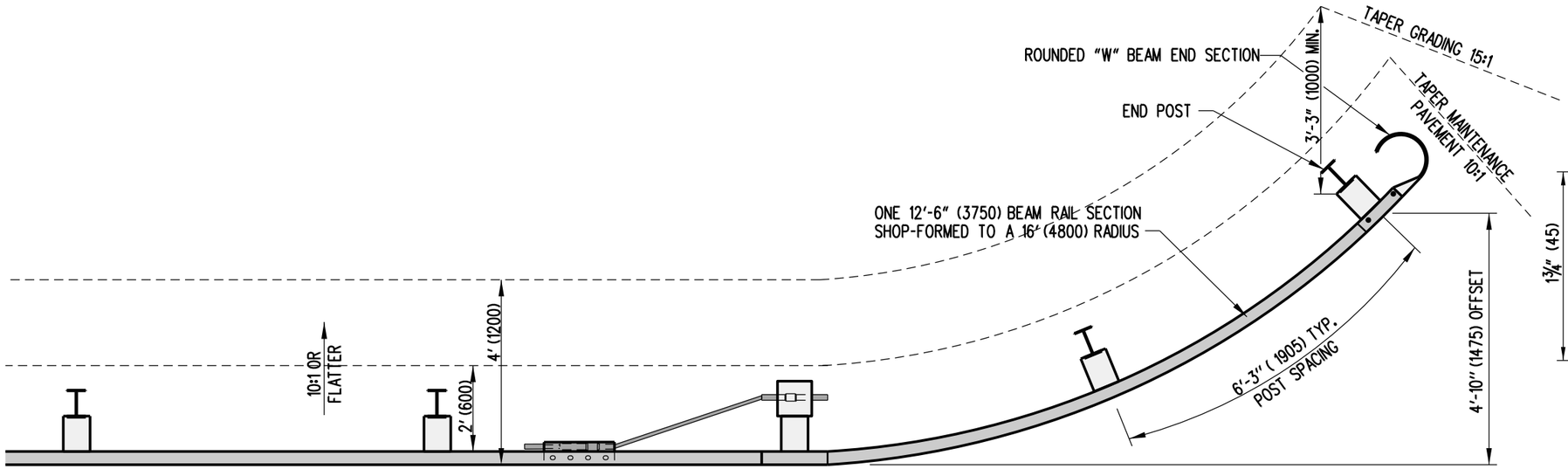

PLAN

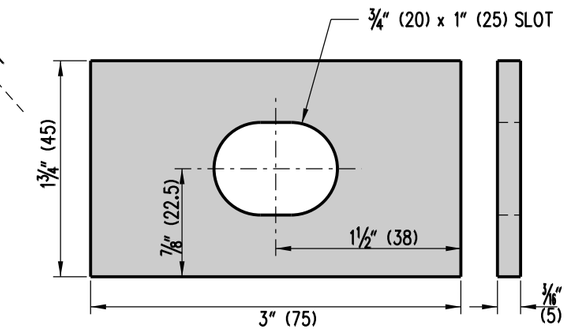

PLATE WASHER DETAIL

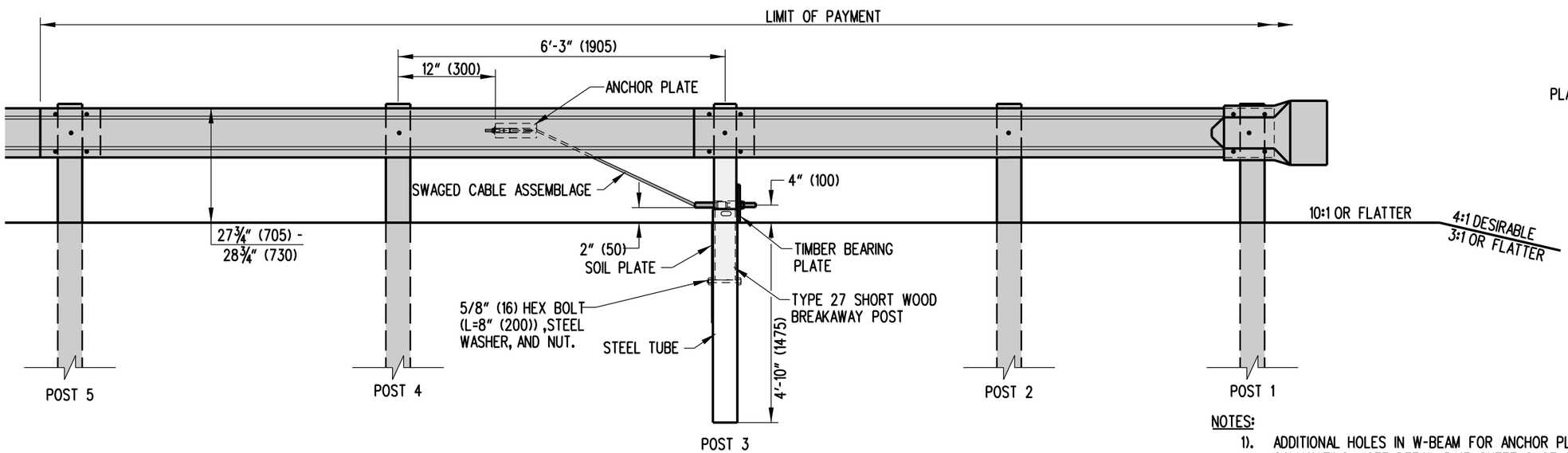

ELEVATION

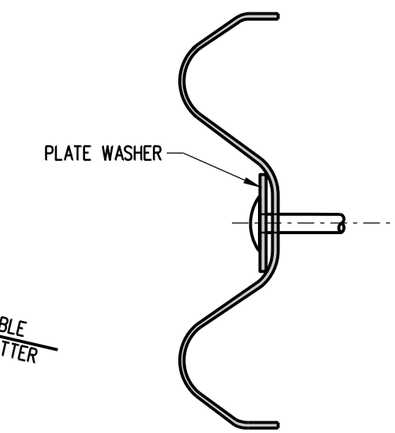

PLATE WASHER MOUNTING POSITION

NOTES:

1). ADDITIONAL HOLES IN W-BEAM FOR ANCHOR PLATE SHALL BE DRILLED PRIOR TO GALVANIZING. (SEE DETAIL B-13, SHEET 8 OF 10 FOR HOLE SPACING INFORMATION).
2). CONTRACTOR HAS THE OPTION OF USING A 6'-0" (1830) STEEL TUBE WITHOUT A SOIL PLATE OR A 5'-0" (1525) STEEL TUBE WITH A SOIL PLATE.
3). PLATE WASHERS SHALL BE INSTALLED AT POSTS 3 & 4 ONLY.
4). THIS END TREATMENT SHALL ONLY BE USED ON TRAVEL WAYS WITH A POSTED SPEED LIMIT OF 40 MPH (64 KM/H) OR LESS.

DELAWARE DEPARTMENT OF TRANSPORTATION	GUARDRAIL END TREATMENT, TYPE 4-27		APPROVED SIGNATURE ON FILE (CHIEF ENGINEER) 12/28/2010 (DATE)
	STANDARD NO. B-17 (2010)	SHT. 1 OF 1	RECOMMENDED SIGNATURE ON FILE (DESIGN ENGINEER) 12/27/2010 (DATE)

09/03/2010

SCALE : N.T.S.

RADIUS	MIN. REQUIRED AREA FREE OF FIXED OBJECTS
	L x W
8′-6″ (2600)	25′ x 15′ (7600 x 4500)
17′-0″ (5200)	30′ x 15′ (9144 x 4500)
25′-6″ (7800)	40′ x 20′ (1200 x 6000)
35′-0″ (10700)	50′ x 20′ (15200 x 6000)

NOTES:

1). NO WASHERS ARE USED ON THE RAIL SIDE OF THE LONG WOOD BREAKAWAY POSTS.
2). THE CURVED GUARDRAIL SECTION SHALL BE SHOP BENT.
3). PLACE GUARDRAIL DELINEATORS AT THE INTERVALS SPECIFIED IN THE DELAWARE MANUAL ON UNIFORM TRAFFIC CONTROL DEVICES.
4). IF CURB IS USED IN CONJUNCTION WITH CURVED GUARDRAIL SECTION, THE CURB CANNOT BE HIGHER THAN 2″ (50).
5). ON THE 8′6′ (2600) RADIUS SYSTEM ONLY, THE RAIL IS NOT TO BE BOLTED TO THE CENTER POST.

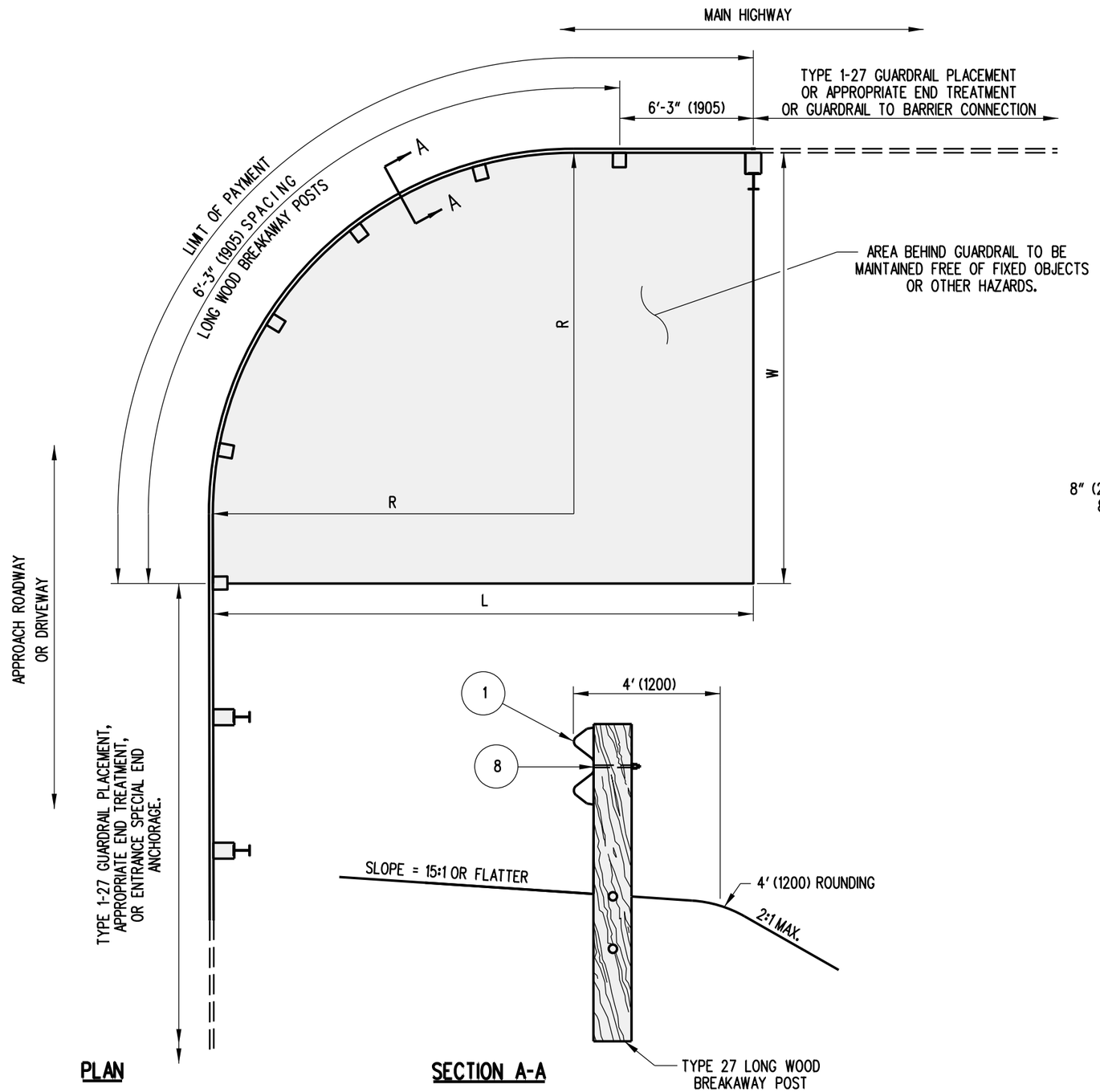

PLAN

SECTION A-A

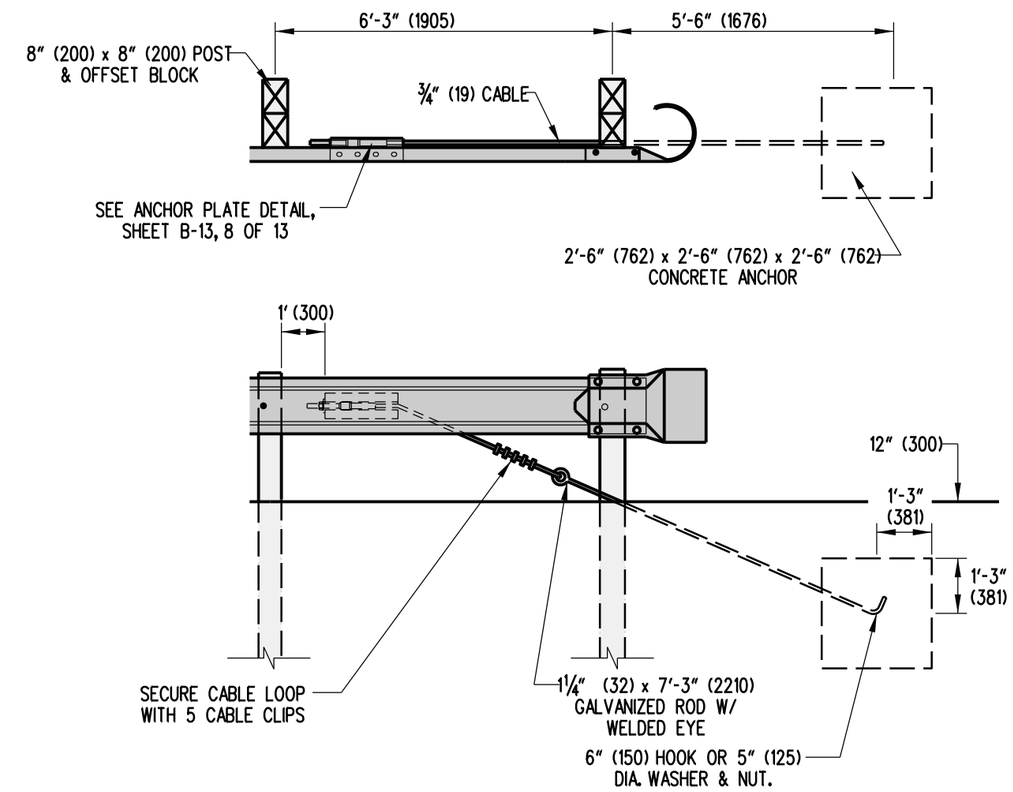

ENTRANCE SPECIAL END ANCHORAGE

DELAWARE DEPARTMENT OF TRANSPORTATION	CURVED GUARDRAIL SECTION	APPROVED	SIGNATURE ON FILE (CHIEF ENGINEER) — 12/28/2010 (DATE)
	STANDARD NO. B-18 (2010) — SHT. 1 OF 1	RECOMMENDED	SIGNATURE ON FILE (DESIGN ENGINEER) — 12/27/2010 (DATE)

09/03/2010

SCALE : NTS

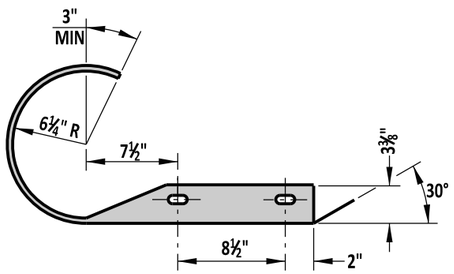

END SECTION PLAN

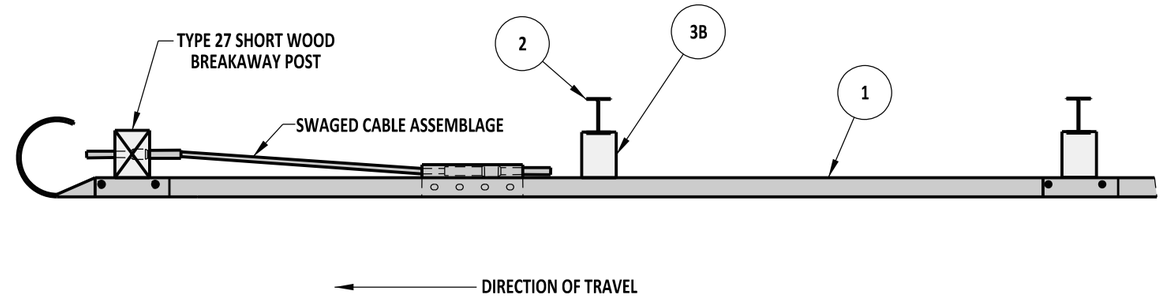

PLAN

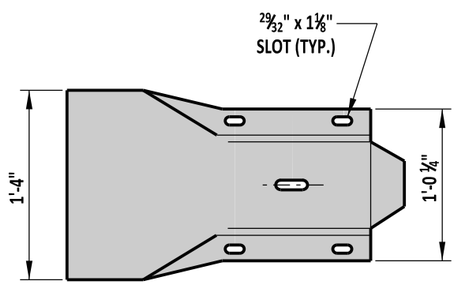

END SECTION ELEVATION

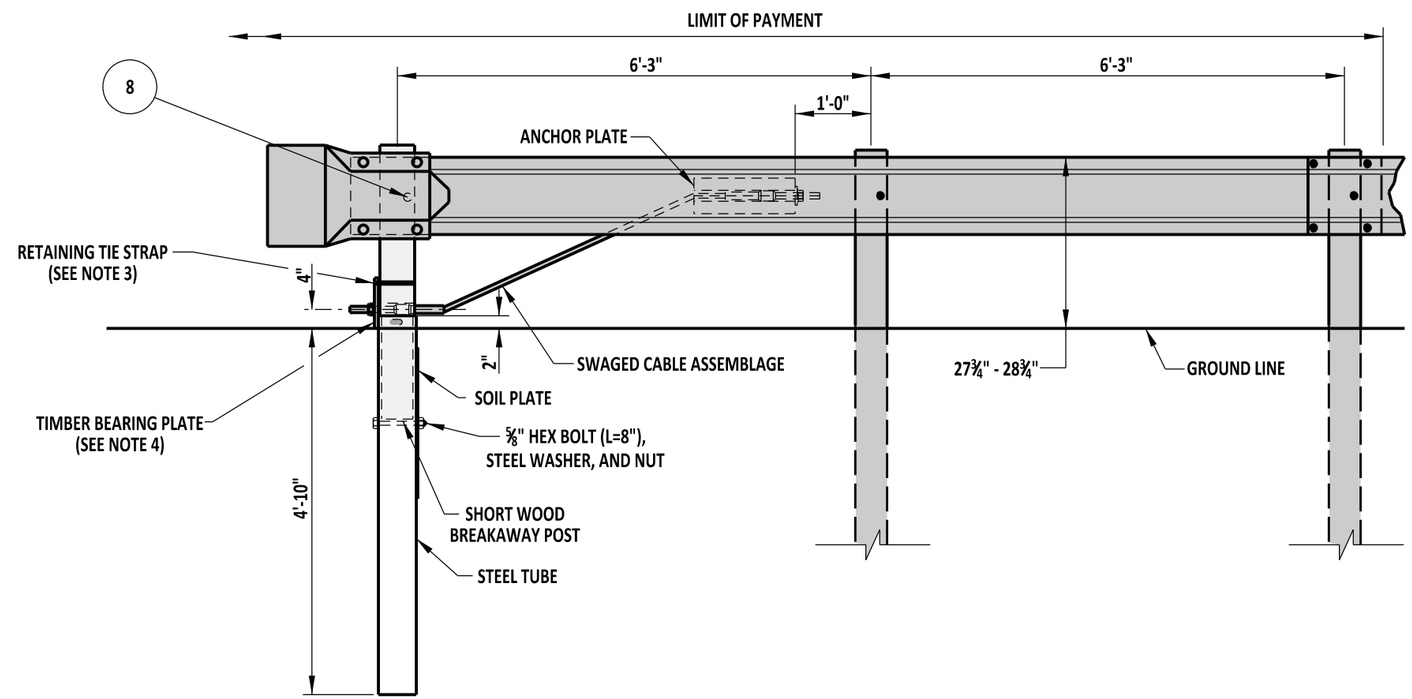

ELEVATION

NOTES:

1). ADDITIONAL HOLES FOR ANCHOR PLATE SHALL BE DRILLED PRIOR TO GALVANIZING. (SEE STANDARD HARDWARE SHEET FOR HOLE SPACING INFORMATION).
2). CONTRACTOR HAS THE OPTION OF USING A 6'-0" STEEL TUBE WITHOUT A SOIL PLATE OR A 5'-0" STEEL TUBE WITH A SOIL PLATE.
3). PLACE A ½" WIDE PLASTIC RETAINING TIE STRAP AROUND THE SHORT TIMBER BREAKAWAY POST AND TIMBER BEARING PLATE TO ENSURE THE PROPER ORIENTATION OF THE TIMBER BEARING PLATE.
4). REFER TO DETAIL B-13, SHEET 8 OF 10 FOR PROPER TIMBER BEARING PLATE ORIENTATION.

DELAWARE DEPARTMENT OF TRANSPORTATION	END ANCHORAGE, TYPE 27		APPROVED	SIGNATURE ON FILE (CHIEF ENGINEER)	01/07/2013 (DATE)
	STANDARD NO. B-19 (2012)	SHT. 1 OF 1	RECOMMENDED	SIGNATURE ON FILE (DESIGN ENGINEER)	12/20/2012 (DATE)

12/4/2012

SCALE : N.T.S.

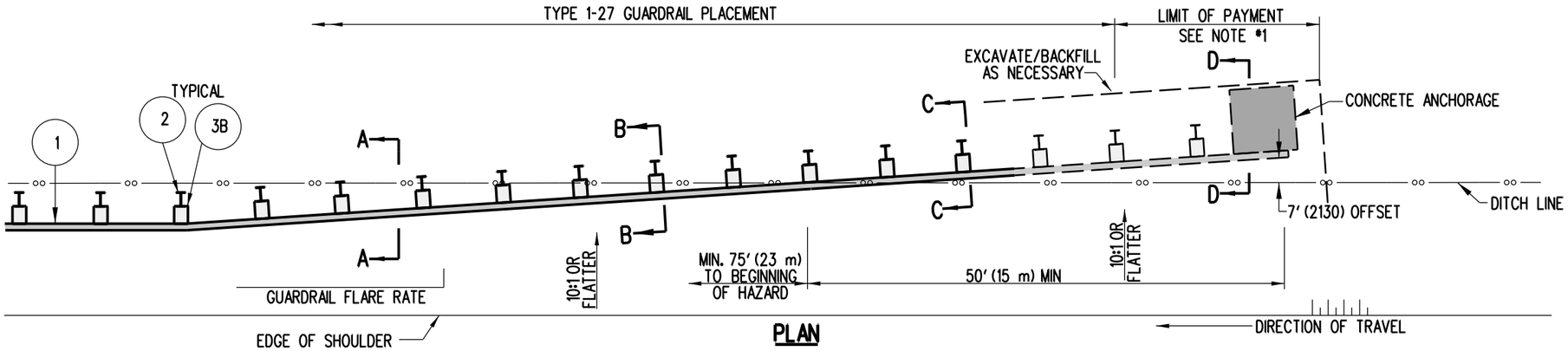

PLAN

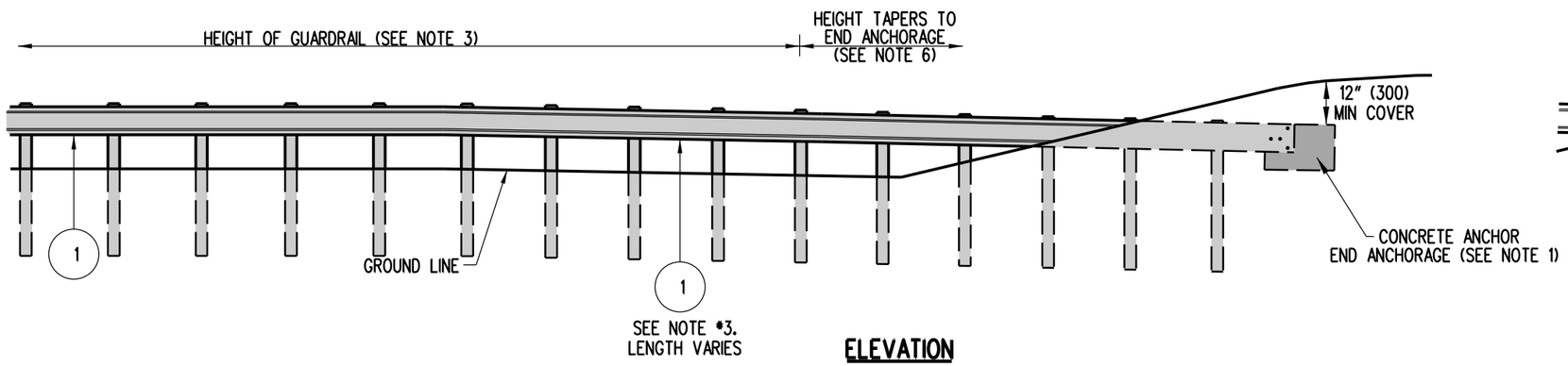

ELEVATION

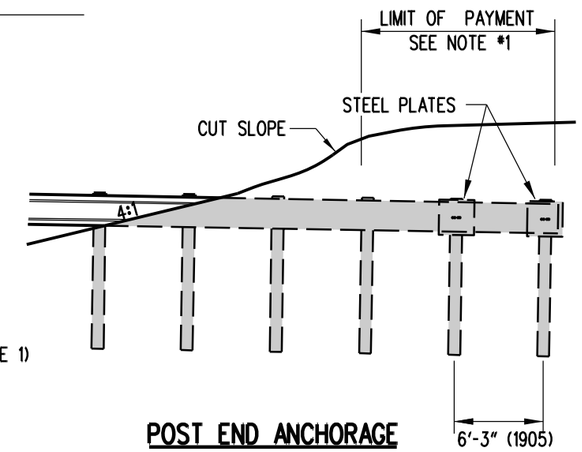

POST END ANCHORAGE
(SINGLE RAIL)

FLARE RATES	
DESIGN SPEED	FLARE RATE
70 MPH (110 km/h)	15:1
60 MPH (100 km/h)	14:1
55 MPH (90 km/h)	12:1
50 MPH (80 km/h)	11:1
45 MPH (70 km/h)	10:1
40 MPH (60 km/h)	9:1
30 MPH (50 km/h)	7:1

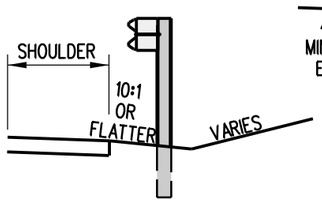

SECTION A-A

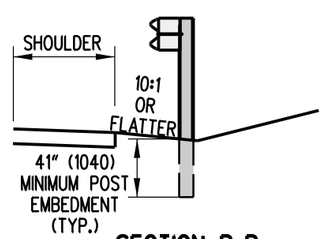

SECTION B-B

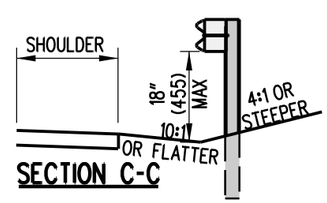

SECTION C-C

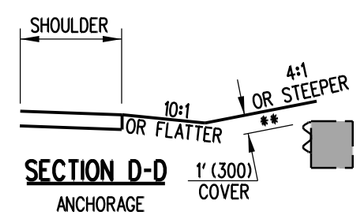

SECTION D-D
ANCHORAGE

** 1' (300) BURIAL IS NOT REQUIRED WHEN ANCHORING IN ROCK.

NOTES:

1). BURIED END SECTION PAYMENT INCLUDES THE CONCRETE OR POST ANCHORAGE, EXCAVATION, BACKFILL, AND ALL APPLICABLE ITEMS INCLUDING LABOR NECESSARY TO COMPLETE END ANCHORAGE.
2). THE CONTRACTOR HAS THE OPTION OF USING EITHER A CONCRETE BLOCK ANCHOR OR A POST ANCHOR TO TERMINATE THE BURIED END SECTION.
3). WHEN PLACING GUARDRAIL ON A 10:1 OR FLATTER SLOPE, THE HEIGHT OF THE GUARDRAIL SHALL BE HELD CONSTANT RELATIVE TO THE GROUND DIRECTLY UNDER THE FACE OF THE GUARDRAIL.
4). ALL POSTS SHALL BE 6' (1800) FOR SINGLE RAIL INSTALLATION.
5). WHEN USING THE BURIED END SECTION, THE DESIGN MUST PROVIDE A MINIMUM OF 75' (23 m) FROM WHERE THE GUARDRAIL CROSSES THE DITCH LINE TO THE BEGINNING OF THE HAZARD.
6). MAINTAIN THE FLARE OF THE GUARDRAIL UNTIL THE 12" (300) COVER HAS BEEN ATTAINED. IF THE 12" (300) COVER CANNOT BE ATTAINED BEFORE THE RAIL IS 7' (2100) BEHIND THE BOTTOM OF THE DITCH, THEN SLOPE THE GUARDRAIL FROM THE POINT WHERE IT CROSSES THE DITCH TO WHERE IT IS 7' (2100) BEHIND THE DITCH, SO THAT IT HAS 12" (300) OF COVER.

DELAWARE
DEPARTMENT OF TRANSPORTATION

BURIED END SECTION

STANDARD NO. B-20 (2010) | SHT. 1 OF 3

APPROVED SIGNATURE ON FILE (CHIEF ENGINEER) 12/28/2010 (DATE)

RECOMMENDED SIGNATURE ON FILE (DESIGN ENGINEER) 12/27/2010 (DATE)

09/03/2010

SCALE : N.T.S.

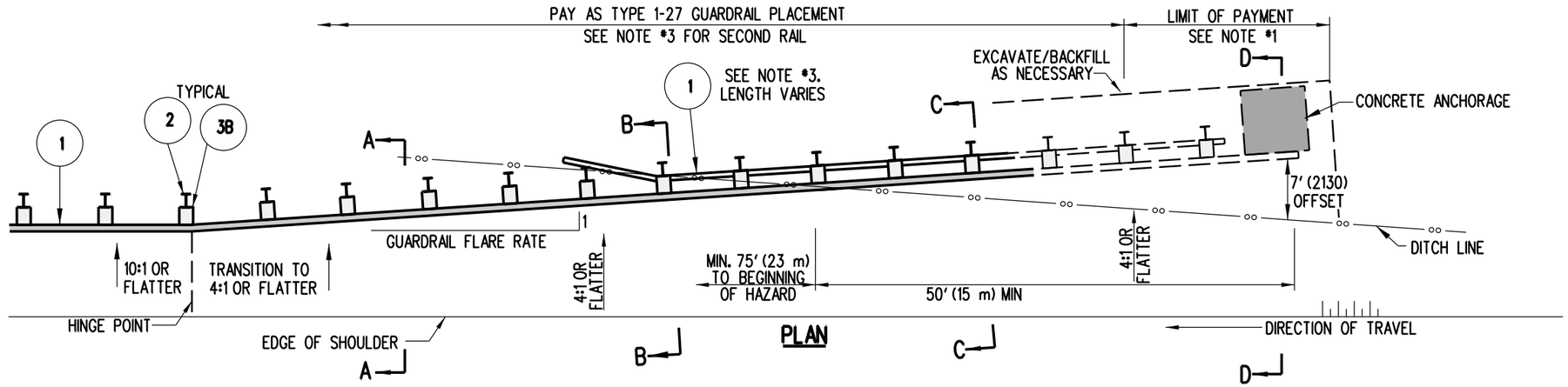

PLAN

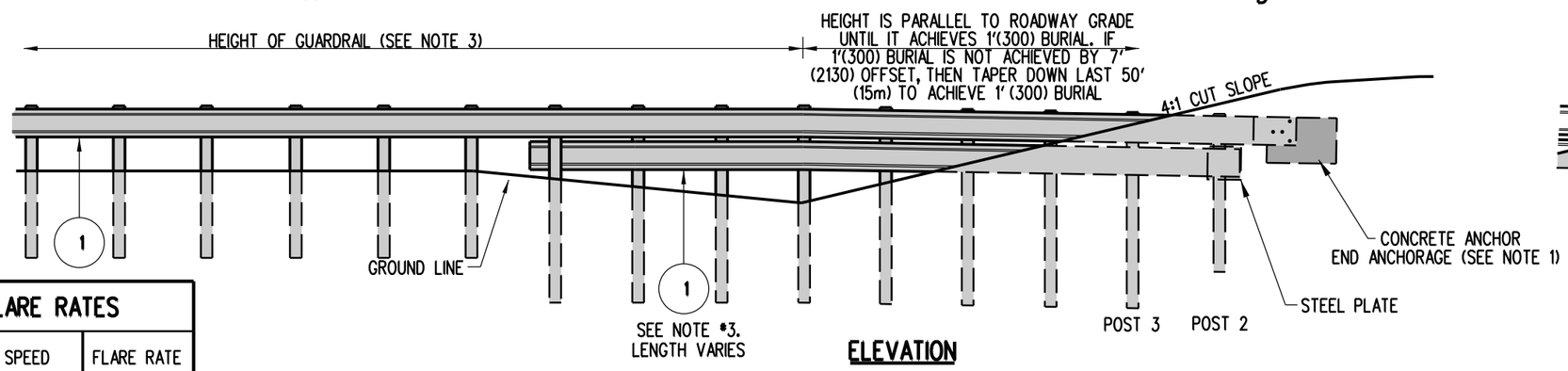

ELEVATION

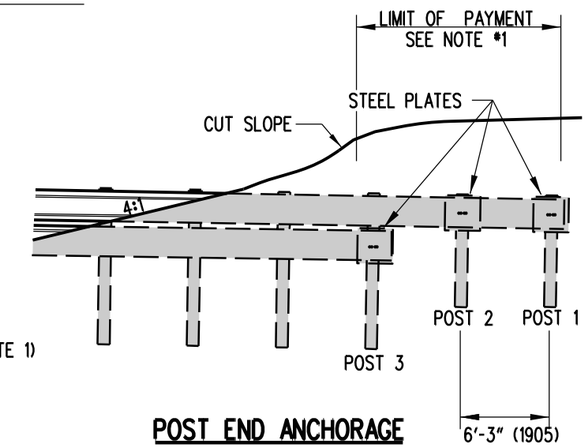

POST END ANCHORAGE

FLARE RATES	
DESIGN SPEED	FLARE RATE
70 MPH (110 km/h)	15:1
60 MPH (100 km/h)	14:1
55 MPH (90 km/h)	12:1
50 MPH (80 km/h)	11:1
45 MPH (70 km/h)	10:1
40 MPH (60 km/h)	9:1
30 MPH (50 km/h)	7:1

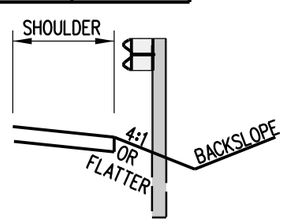

SECTION A-A

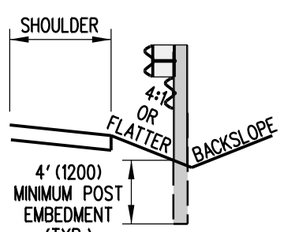

SECTION B-B
(WITH RUBRAIL)

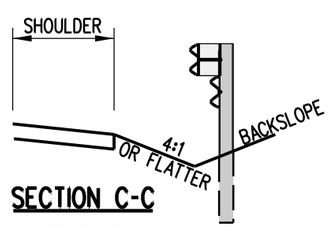

SECTION C-C
(WITH RUBRAIL)

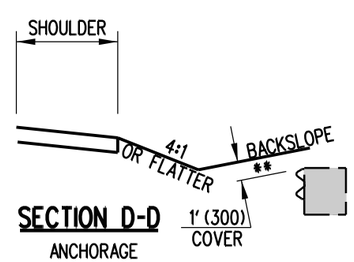

SECTION D-D
ANCHORAGE

** 1' (300) BURIAL IS NOT REQUIRED WHEN ANCHORING IN ROCK.

NOTES:

1). BURIED END SECTION PAYMENT INCLUDES THE CONCRETE OR POST ANCHORAGE, EXCAVATION, BACKFILL, AND ALL APPLICABLE ITEMS, INCLUDING LABOR NECESSARY TO COMPLETE END ANCHORAGE.

2). THE CONTRACTOR HAS THE OPTION OF USING EITHER A CONCRETE BLOCK ANCHOR OR A POST ANCHOR TO TERMINATE THE BURIED END SECTION.

3). THE TOP OF THE W-BEAM SHALL BE HELD CONSTANT RELATIVE TO THE ROADWAY PROFILE GRADE UNTIL IT CROSSES THE DITCH FLOW LINE. A SECOND W-BEAM RAIL IS REQUIRED WHEN THE DISTANCE BETWEEN THE GROUND AND THE BOTTOM OF THE TOP RAIL EXCEEDS 18" (450). THE MAXIMUM HEIGHT OF THE DOUBLE RAIL SYSTEM IS 45" (1150). IF NECESSARY, TAPER BOTH RAILS DOWN TO MAINTAIN MAXIMUM HEIGHT. SECOND RAIL SHALL BE PAID FOR AS ADDITIONAL LINEAR FEET (LINEAR METERS) OF TYPE 1-27 OR 1-31 GUARDRAIL.

4). WHEN USING A SECOND RAIL, 8' (2400) LONG POSTS ARE REQUIRED. BEHIND THE DITCHLINE, POSTS MUST PROVIDE 4' (1200) MINIMUM EMBEDMENT (20" (510) WHEN ROCK IS ENCOUNTERED). POSTS FOR THE POST ANCHOR SHALL BE 6' (1800) LONG.

5). WHEN USING THE BURIED END SECTION, THE DESIGN MUST PROVIDE A MINIMUM OF 75' (23 m) FROM WHERE THE GUARDRAIL CROSSES THE DITCH LINE TO THE BEGINNING OF THE HAZARD.

6). MAINTAIN THE FLARE OF THE GUARDRAIL UNTIL THE 12" (300) COVER HAS BEEN ATTAINED. IF THE 12" (300) COVER CANNOT BE ATTAINED BEFORE THE RAIL IS 7' (2100) BEHIND THE BOTTOM OF THE DITCH, THEN SLOPE THE GUARDRAIL FROM THE POINT WHERE IT CROSSES THE DITCH TO WHERE IT IS 7' (2100) BEHIND THE DITCH, SO THAT IT HAS 12" (300) OF COVER.

DELAWARE DEPARTMENT OF TRANSPORTATION	BURIED END SECTION - DOUBLE RAIL SYSTEM		APPROVED SIGNATURE ON FILE (CHIEF ENGINEER) 12/28/2010 (DATE)
	STANDARD NO. B-20 (2010)	SHT. 2 OF 3	RECOMMENDED SIGNATURE ON FILE (DESIGN ENGINEER) 12/27/2010 (DATE)

09/03/2010

SCALE : N.T.S.

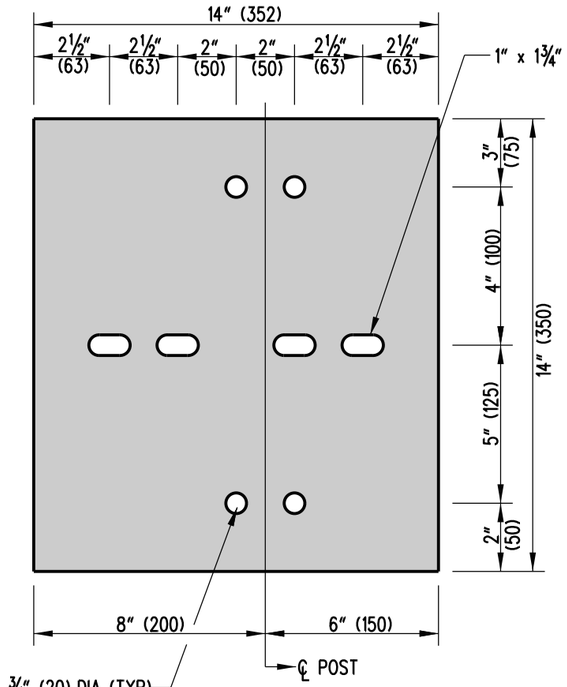

STEEL PLATE - ½" (13) THICK

GALVANIZED

NOTE: ALL HOLES TO BE DRILLED PRIOR TO GALVANIZING.

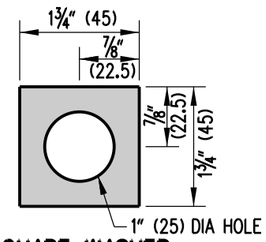

SQUARE WASHER

¼" (6) THICK - GALVANIZED

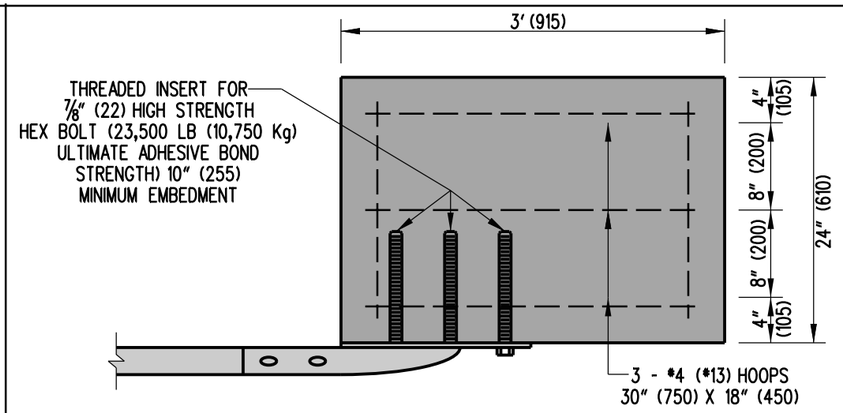

PLAN

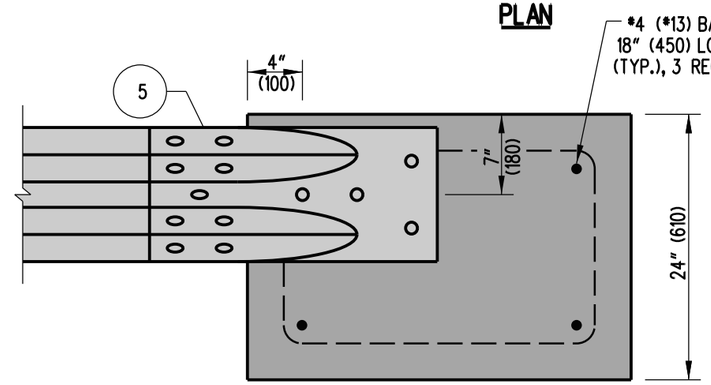

ELEVATION

CONCRETE BLOCK ANCHOR

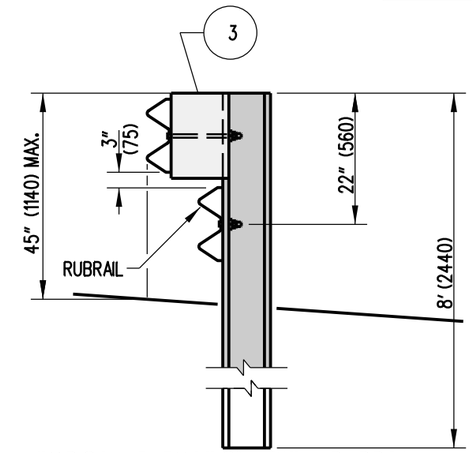

TYPICAL ELEVATION WITH RUBRAIL

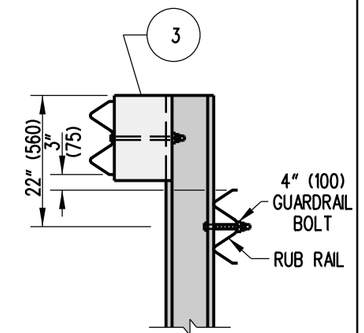

ELEVATION

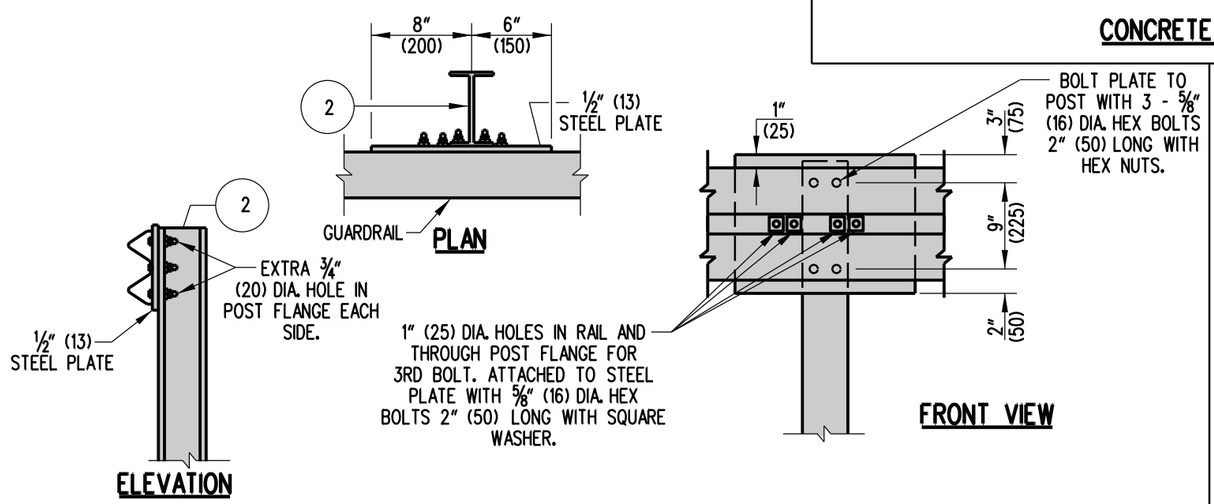

POST ANCHOR DETAIL

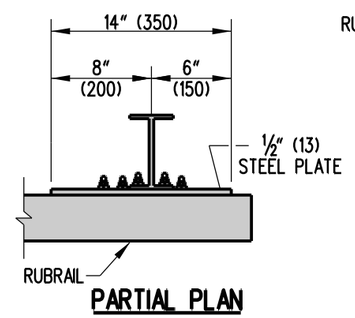

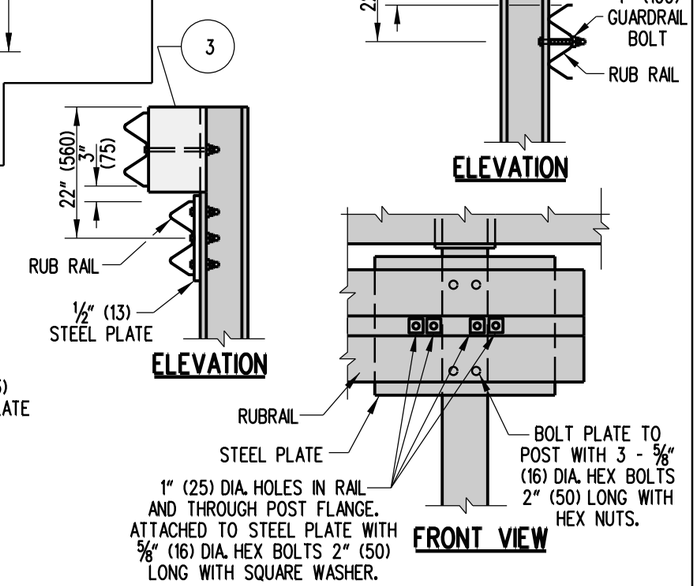

RUBRAIL ANCHOR ATTACHMENT

DELAWARE DEPARTMENT OF TRANSPORTATION	BURIED END SECTION		APPROVED SIGNATURE ON FILE (CHIEF ENGINEER) 12/28/2010 (DATE)
	STANDARD NO. B-20 (2010)	SHT. 3 OF 3	RECOMMENDED SIGNATURE ON FILE (DESIGN ENGINEER) 12/27/2010 (DATE)

12/17/2010

SCALE : N.T.S.

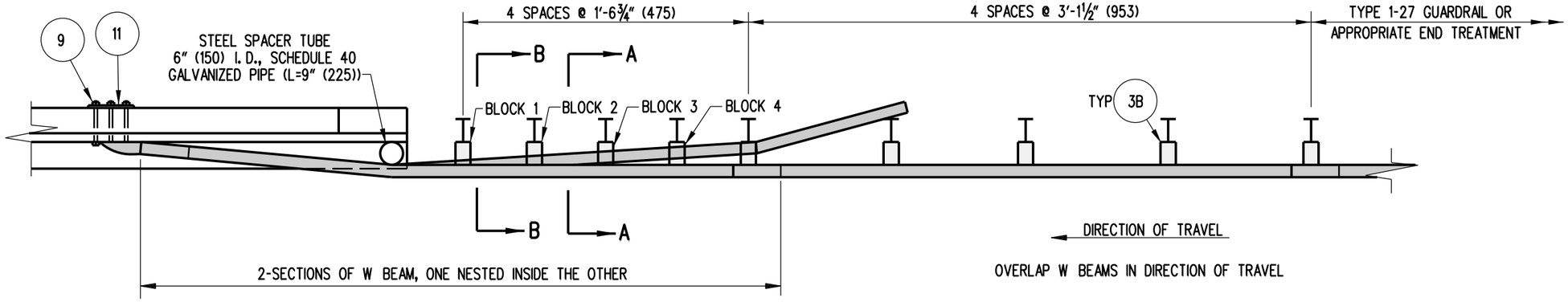

PLAN

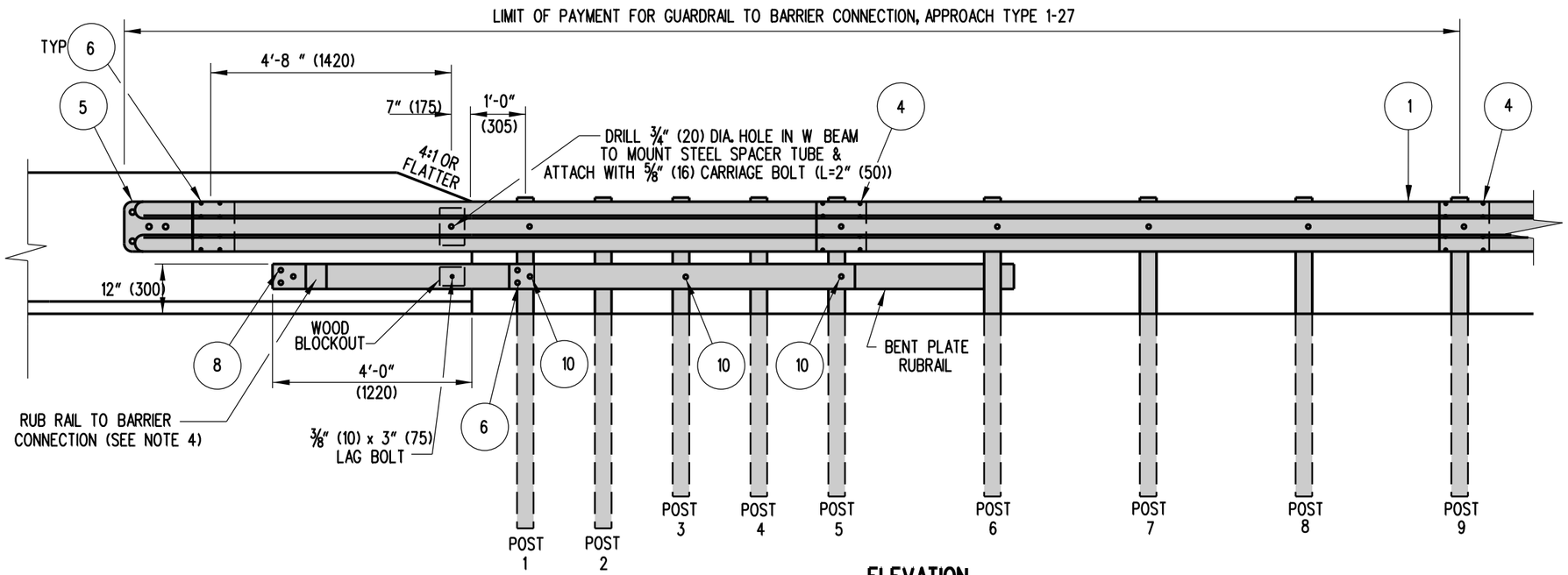

ELEVATION

NOTES:

1). THE W-BEAM AND RUB RAIL ARE NOT BOLTED TO POSTS AT POSTS 2 THROUGH 4.
2). POSTS 1 THROUGH 6 REQUIRE AN ADDITIONAL HOLE TO ATTACH LOWER WOOD BLOCKS AND/OR RUBRAIL AND WOOD BLOCK
3). USE APPROPRIATE EPOXY BOLT ANCHORS TO REDUCE THE CHANCE OF SPLITTING THE CONCRETE. PLACE STEEL WASHERS (FOR ⅝" (16) BOLT) BETWEEN HEADS AND RUB RAIL.
4). ALL HOLES SHALL BE DRILLED PRIOR TO GALVANIZING.
5). PLACE GUARDRAIL DELINEATORS AT THE INTERVALS SPECIFIED IN THE DELAWARE MANUAL ON UNIFORM TRAFFIC CONTROL DEVICES.
6). APPROVED CONCRETE INSERTS MAY BE USED IN NEW CONSTRUCTION TO ATTACH TERMINAL CONNECTOR TO PARAPET.
7). POSTS 1 & 2 ARE W8x13 (W200x19.3), 7'-6' (2.28m) LONG. ALL OTHER POSTS IN TRANSITION ARE W6x9 (W150x13.5), 6'-0" (1.82m) LONG.
8). SEE DETAIL B-5, SHEETS 2 AND 3 OF 6 FOR HARDWARE DETAILS.

DELAWARE DEPARTMENT OF TRANSPORTATION	GUARDRAIL TO BARRIER CONNECTION, APPROACH TYPE 1-27	APPROVED	SIGNATURE ON FILE (CHIEF ENGINEER) — 12/28/2010 (DATE)
	STANDARD NO. B-21 (2010) — SHT. 1 OF 3	RECOMMENDED	SIGNATURE ON FILE (DESIGN ENGINEER) — 12/27/2010 (DATE)

09/20/2010

SCALE : N.T.S.

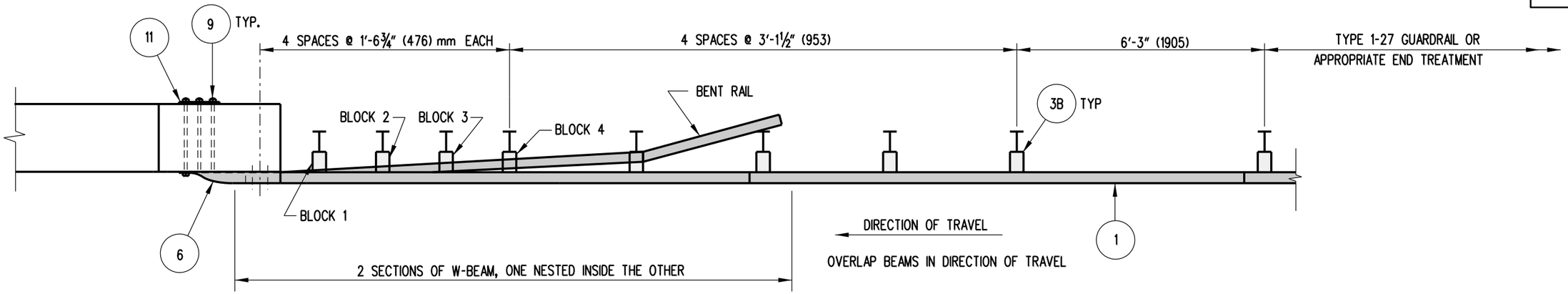

PLAN

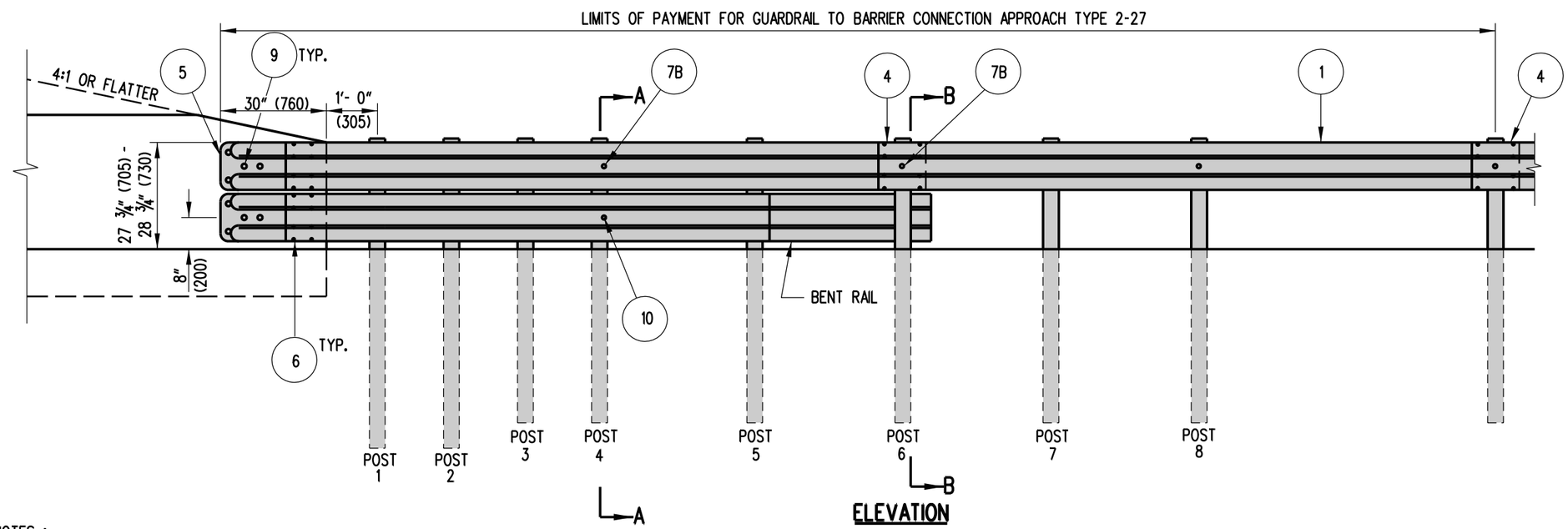

ELEVATION

NOTES :

1). CURB SHALL NOT BE USED AT THE FACE OF RAIL WITHIN THE LIMITS OF THIS INSTALLATION.
2). POSTS 1, 2, 3, 4, AND 6 REQUIRE AN ADDITIONAL HOLE TO ATTACH WOOD BLOCKS AND/OR BENT RAIL.
3). DO NOT ATTACH RAILS TO POSTS 1, 2, 3, 5, OR 7.
4). POSTS 1 AND 2 ARE W8x13 (W200x19.3), 7'-6" (2.28m) LONG. ALL OTHER POSTS IN TRANSITION ARE W6x9 (w150x13.5), 6'-0" (1.82m) LONG.
5). BENT RAIL MAY BE SHOP BENT TO FACILITATE INSTALLATION OR MAY BE FIELD BENT USING HEAT.
6). APPROVED CONCRETE INSERTS MAY BE USED IN NEW CONSTRUCTION TO ATTACH TERMINAL CONNECTORS TO PARAPET.
7). ALL HOLES SHALL BE DRILLED PRIOR TO GALVANIZING.
8). PLACE GUARDRAIL DELINEATORS AT THE INTERVALS SPECIFIED IN THE DELAWARE MANUAL ON UNIFORM TRAFFIC CONTROL DEVICES.
9). FOR INSTALLATIONS WHERE CURB EXISTS, IF THE EXISTING CURB IS 8" (200) OR HIGHER AND CANNOT BE REMOVED, THE BOTTOM RAIL CAN BE ELIMINATED.
10). SEE DETAIL B-5, SHEET 5 OF 6 FOR HARDWARE DETAILS.
11). BENT RAIL SHALL BE BOLTED TO THE BACK OF POST 6 WITH A ⅝" (16) GUARDRAIL BOLT, 4" (200) LONG, WASHER, AND NUT.

DELAWARE DEPARTMENT OF TRANSPORTATION	GUARDRAIL TO BARRIER CONNECTION, APPROACH TYPE 2-27		APPROVED SIGNATURE ON FILE (CHIEF ENGINEER) 12/28/2010 (DATE)
	STANDARD NO. B-21 (2010)	SHT. 2 OF 3	RECOMMENDED SIGNATURE ON FILE (DESIGN ENGINEER) 12/27/2010 (DATE)

09/20/2010

SCALE : N.T.S.

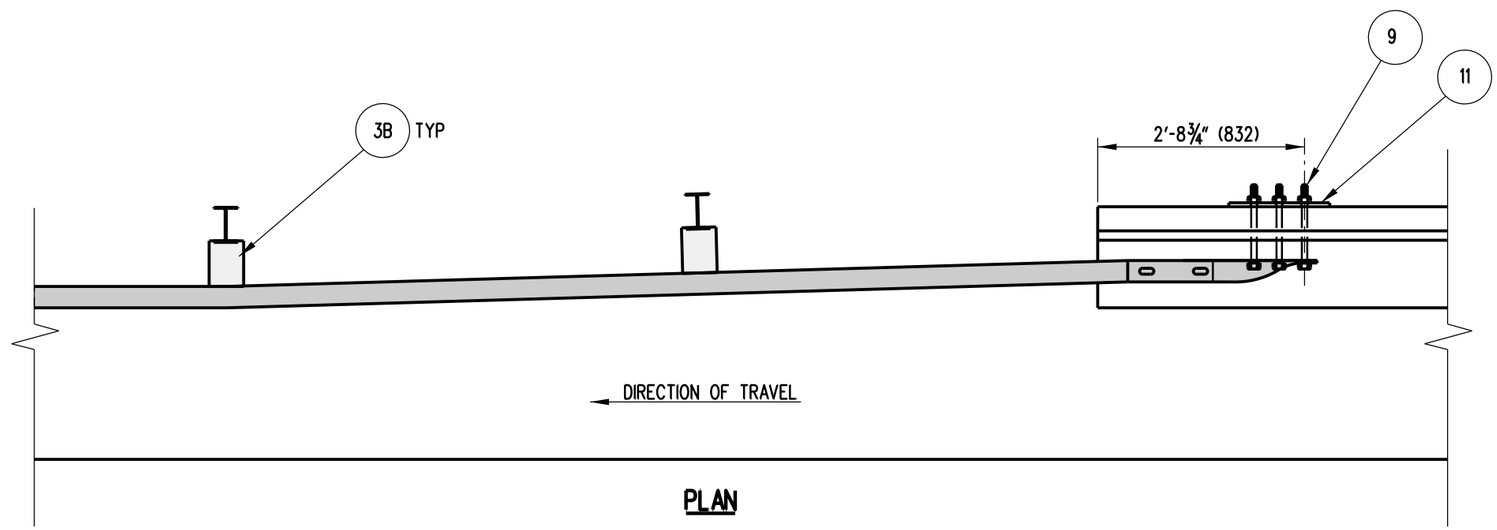

PLAN

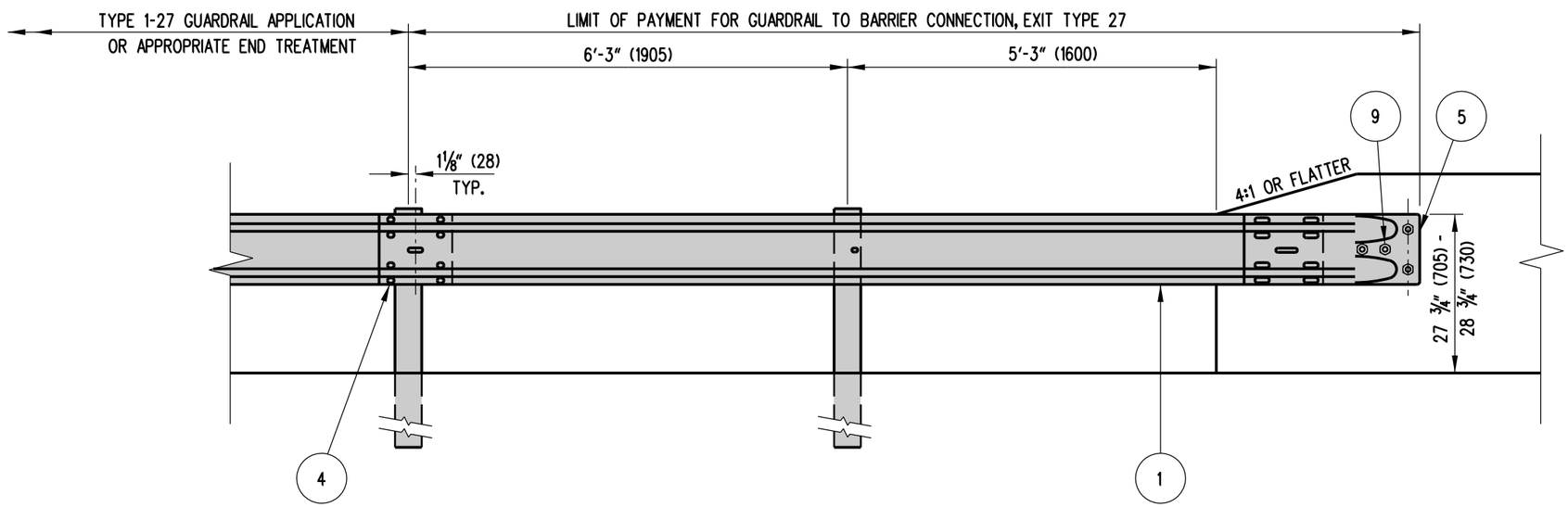

ELEVATION

NOTES:

1). CONCRETE INSERTS MAY BE USED IN NEW CONSTRUCTION TO ATTACH TERMINAL CONNECTO TO PARAPET.
2). GUARDRAIL SECTION AND TERMINAL CONNECTORS SHALL BE OVERLAPPED IN THE DIRECTION OF TRAVEL
3). INSTALLATION SHOWN ABOVE WITH AN 'F-TYPE' BARRIER FACE. GUARDRAIL SECTION OF BARRIER CONNECTION SHALL BE ADJUSTED HORIZONTALLY IN ORDER TO MEET FLUSH AGAINST VARIOUS TYPES OF WALLS AND BARRIERS.

DELAWARE DEPARTMENT OF TRANSPORTATION	GUARDRAIL TO BARRIER CONNECTION, EXIT TYPE 27		APPROVED SIGNATURE ON FILE (CHIEF ENGINEER) 12/28/2010 (DATE)
	STANDARD NO. B-21 (2010)	SHT. 3 OF 3	RECOMMENDED SIGNATURE ON FILE (DESIGN ENGINEER) 12/27/2010 (DATE)

09/20/2010

SCALE : NTS

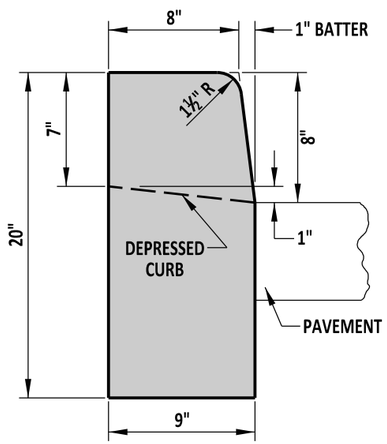

P.C.C. CURB
TYPE 1-8

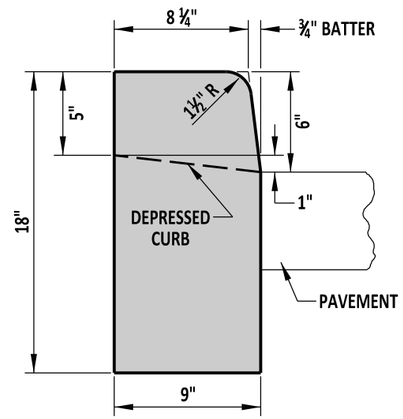

P.C.C. CURB
TYPE 1-6

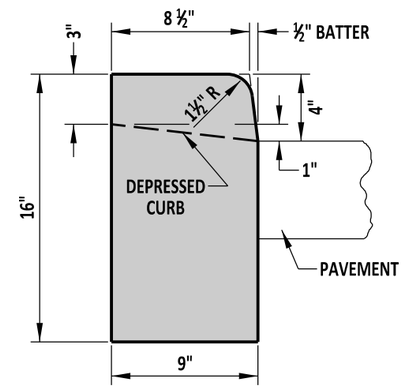

P.C.C. CURB
TYPE 1-4

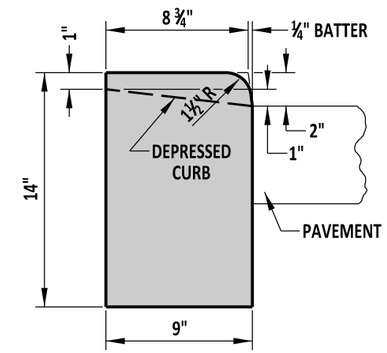

P.C.C. CURB
TYPE 1-2

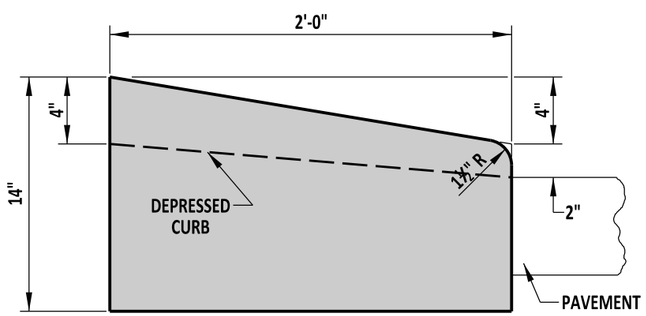

P.C.C. CURB
TYPE 2

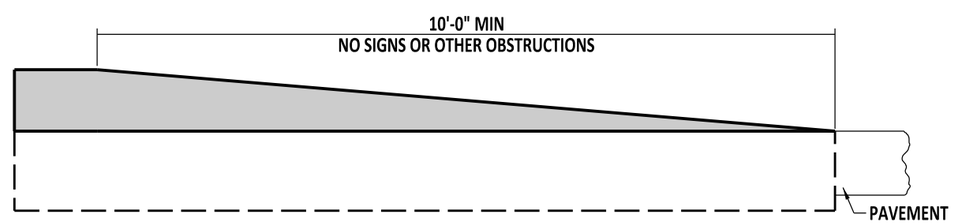

TYPICAL TAPER SECTION AT NOSE OF MEDIANS
TYPE 1-8 CURB SHOWN

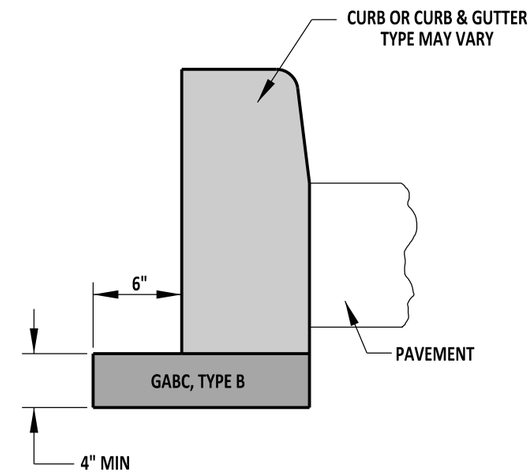

TYPICAL CURB SECTION

NOTES:

1). WHEN P.C.C. CURB OR INTEGRAL P.C.C. CURB AND GUTTER IS PLACED ADJACENT TO PORTLAND CEMENT CONCRETE PAVEMENT, CONSTRUCT THE JOINT AS PER THE LONGITUDINAL JOINT SEALANT DETAIL ON DETAIL P-2, SHEET 3 OF 5. USE APPROVED JOINT FILLER TO SEAL. WORK TO BE PAID UNDER RESPECTIVE CURB AND GUTTER ITEM.
2). DEPRESS CURB AT ENTRANCES AS DETAILED ON THIS SHEET.
3). DEPRESS CURB FLUSH WITH PAVEMENT AT CURB RAMPS. MAXIMUM SLOPE OF CURB AT CURB RAMPS IS 20:1 IN THE DIRECTION OF PEDESTRIAN TRAVEL. SEE DETAIL C-2, SHEET 1 OF 4.
4). DEPRESS CURB FLUSH WITH PAVEMENT OR ADJACENT AREA AT LEADING EDGE OF TRIANGULAR ISLANDS, TAPERING BACK TO FULL HEIGHT AT A SLOPE OF 4:1.
5). DEPRESS END OF CURB RUNS NOT PART OF AN ISLAND OR MEDIAN FLUSH WITH PAVEMENT OR ADJACENT AREA AT A SLOPE OF 12:1.

DELAWARE DEPARTMENT OF TRANSPORTATION	P.C.C. CURB		APPROVED	SIGNATURE ON FILE (CHIEF ENGINEER)	01/07/2013 (DATE)
	STANDARD NO. C-1 (2012)	SHT. 1 OF 2	RECOMMENDED	SIGNATURE ON FILE (DESIGN ENGINEER)	12/20/2012 (DATE)

12/4/2012

SCALE : NTS

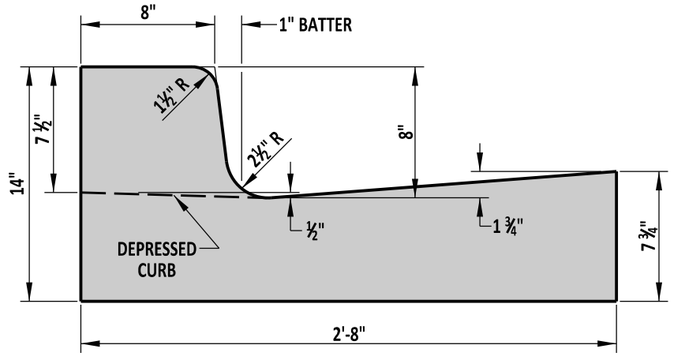

INTEGRAL P.C.C. CURB AND GUTTER
TYPE 1-8

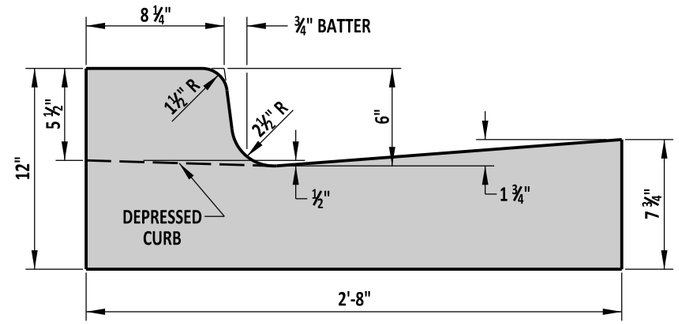

INTEGRAL P.C.C. CURB AND GUTTER
TYPE 1-6

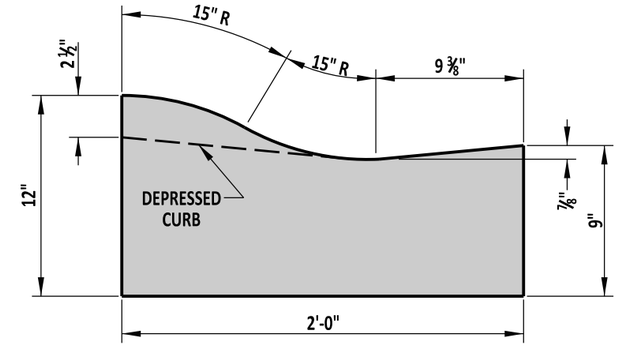

INTEGRAL P.C.C. CURB AND GUTTER
TYPE 2

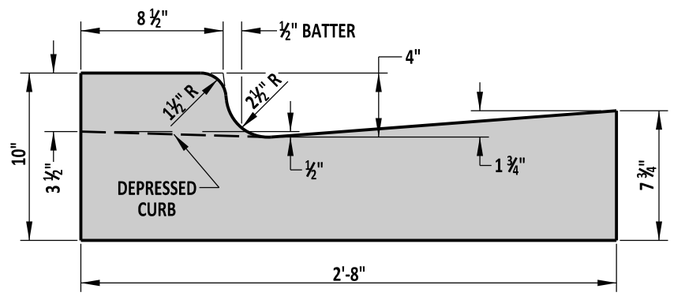

INTEGRAL P.C.C. CURB AND GUTTER
TYPE 1-4

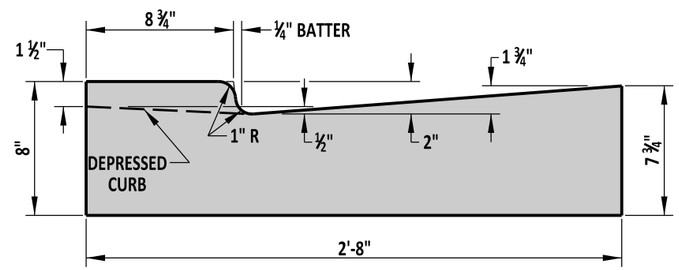

INTEGRAL P.C.C. CURB AND GUTTER
TYPE 1-2

NOTES:

1). WHEN P.C.C. CURB OR INTEGRAL P.C.C. CURB AND GUTTER IS PLACED ADJACENT TO PORTLAND CEMENT CONCRETE PAVEMENT, CONSTRUCT THE JOINT AS PER THE LONGITUDINAL JOINT SEALANT DETAIL ON DETAIL P-2, SHEET 3 OF 5. USE APPROVED JOINT FILLER TO SEAL. WORK TO BE PAID UNDER RESPECTIVE CURB AND GUTTER ITEM.
2). DEPRESS CURB AT ENTRANCES AS DETAILED ON THIS SHEET.
3). DEPRESS CURB FLUSH WITH PAVEMENT AT CURB RAMPS. MAXIMUM SLOPE OF CURB AT CURB RAMPS IS 20:1 IN THE DIRECTION OF PEDESTRIAN TRAVEL. SEE DETAIL C-2, SHEET 1 OF 4.
4). DEPRESS CURB FLUSH WITH PAVEMENT OR ADJACENT AREA AT LEADING EDGE OF TRIANGULAR ISLANDS, TAPERING BACK TO FULL HEIGHT AT A SLOPE OF 4:1. SEE DETAIL C-1, SHEET 1 OF 2 FOR TYPICAL SECTION OF TAPER AT NOSE OF MEDIAN ISLANDS.
5). 4" OF GABC, TYPE B SHALL BE PLACED UNDER ALL P.C.C. CURB AND P.C.C. CURB AND GUTTER. SEE DETAIL C-1, SHEET 1 OF 2 FOR TYPICAL SECTION.
6). DEPRESS END OF CURB RUNS NOT PART OF AN ISLAND OR MEDIAN FLUSH WITH PAVEMENT OR ADJACENT AREA AT A SLOPE OF 12:1.

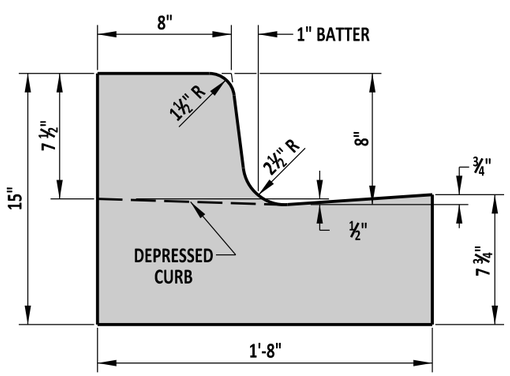

INTEGRAL P.C.C. CURB AND GUTTER
TYPE 3-8

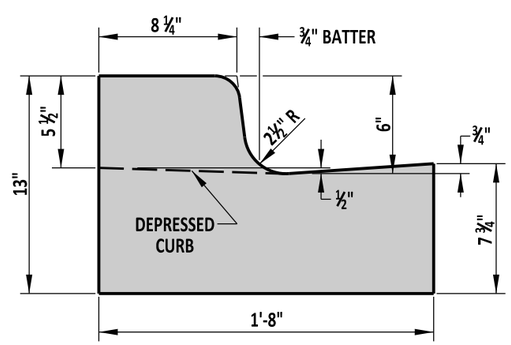

INTEGRAL P.C.C. CURB AND GUTTER
TYPE 3-6

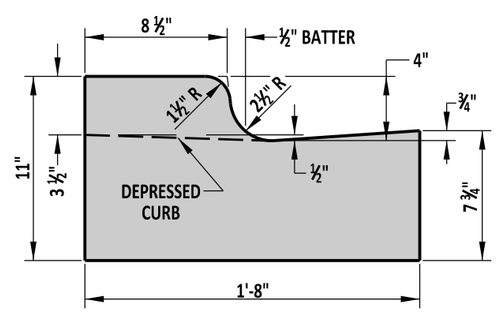

INTEGRAL P.C.C. CURB AND GUTTER
TYPE 3-4

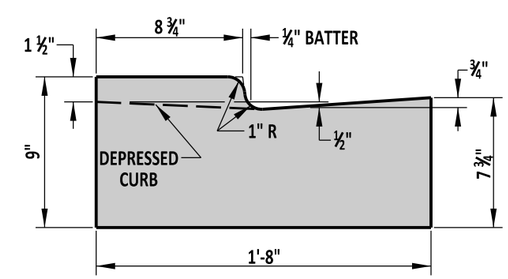

INTEGRAL P.C.C. CURB AND GUTTER
TYPE 3-2

DELAWARE DEPARTMENT OF TRANSPORTATION	INTEGRAL P.C.C. CURB & GUTTER		APPROVED	SIGNATURE ON FILE (CHIEF ENGINEER) — 01/07/2013 (DATE)
	STANDARD NO. C-1 (2012)	SHT. 2 OF 2	RECOMMENDED	SIGNATURE ON FILE (DESIGN ENGINEER) — 12/20/2012 (DATE)

12/4/2012

SCALE : NTS

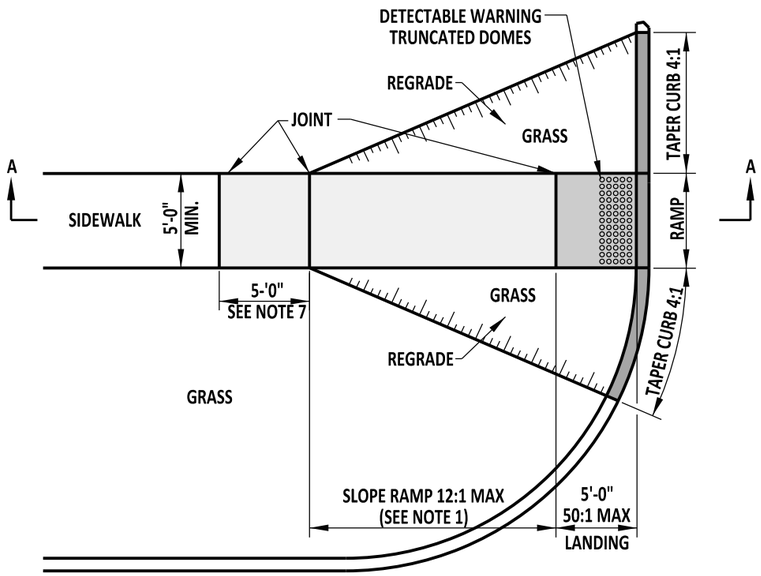

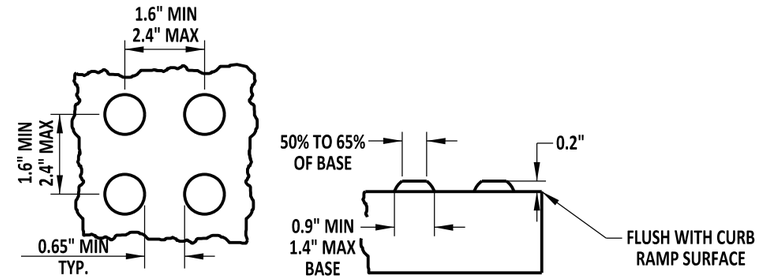

DETECTABLE WARNING TRUNCATED DOME DETAILS

NOTES:

A). THE AREA OF DETECTABLE WARNING TRUNCATED DOMES SHALL BE 2'-0" LONG AND THE FULL WIDTH OF THE RAMP OR DEPRESSED CURB.

B). SEE SPECIFICATION FOR ADDITIVE INFORMATION.

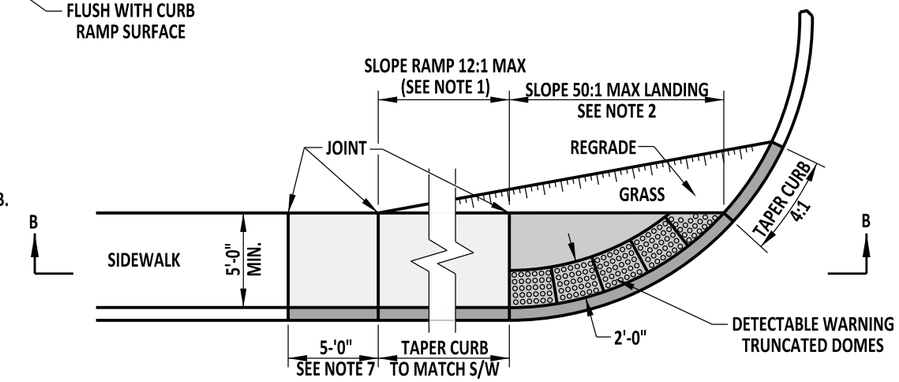

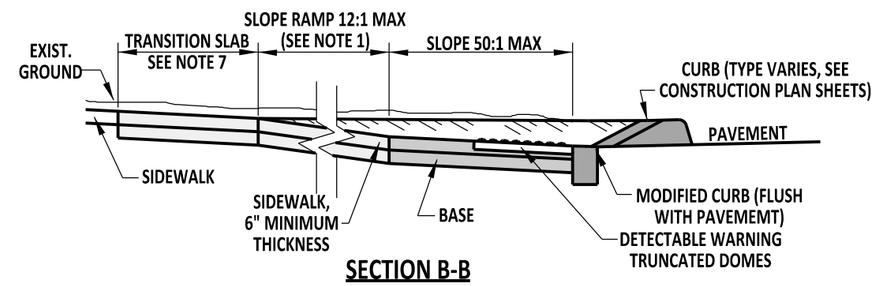

SECTION B-B

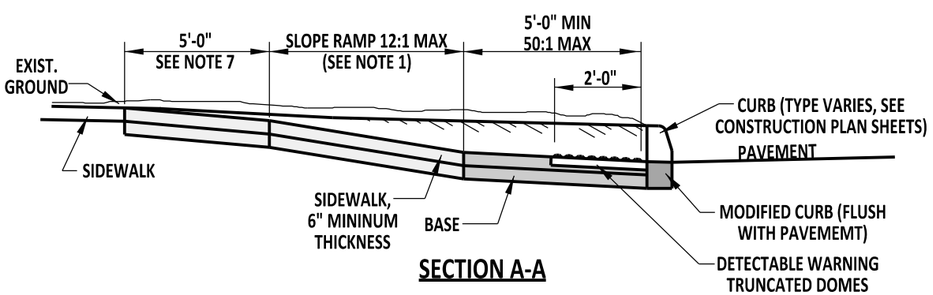

SECTION A-A

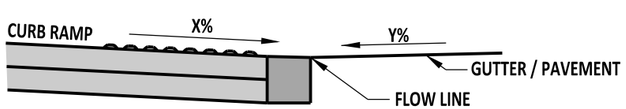

MAXIMUM DIFFERENCE IN GRADE FOR ALL CURB RAMP TYPES

FOR EXAMPLE, IF THE CURB RAMP AND DEPRESSED CURB SLOPE AT THE FLOW LINE (X) IS 8.1% AND THE PAVEMENT SLOPE (Y) IS 4.0%, THEN TO DETERMINE THE DIFFERENCE IN GRADE, ADD X + Y TO GET 12.1%, WHICH IS GREATER THAN THE 11% PREFERRED BUT LESS THAN THE 13% MAXIMUM.

CURB RAMP, TYPE 1

PERPENDICULAR CURB RAMP

NOTES:

1). FOR ALTERATIONS WITHOUT A GRASS STRIP OR WHERE THE EXISTING ROAD PROFILE IS STEEPER THAN 7% AND A 12:1 MAXIMUM SLOPE RAMP WILL NOT MEET THE SIDEWALK GRADE WITHIN A LENGTH OF 15'-0", THE RAMP LENGTH MAY BE LIMITED TO 15'-0" AT A CONSTANT SLOPE, AND ALLOWED TO EXCEED 12:1.

2). RAMP AND SIDEWALK CROSS SLOPE SHALL BE 50:1 (2%) MAXIMUM. FOR REHABILITATION WORK, THE RAMP CROSS SLOPE SHALL MATCH THE SLOPE OF THE ADJACENT ROADWAY.

3). IF GRADING WILL BE STEEPER THAN 6:1, THEN A TYPE 1-8 CURB OR RETAINING WALL SHOULD BE USED TO ELIMINATE THE NEED FOR THE STEEP SLOPE.

4). THE MAXIMUM DIFFERENCE IN GRADE BETWEEN THE CURB RAMP OR MODIFIED CURB AT THE FLOW LINE AND THE PAVEMENT SHALL BE 13%, HOWEVER 11% IS PREFERRED. SEE DETAIL ON THIS SHEET.

5). LANDING AREA SHALL BE EXTENDED 18" MIN BEYOND THE PEDESTRIAN PUSH BUTTON FOR ALL CURB RAMP TYPES. WHEN NO PEDESTRIAN PUSH BUTTON EXISTS, THE 18" EXTENSION CAN BE OMITTED.

6). LANDING AREA SHALL BE DELINEATED WITH JOINTS.

7). FOR REHABILITATION WORK, PLACE TRANSITION SLAB TO TRANSITITION FROM THE NEW RAMP TO THE EXISTING SIDEWALK WHEN THE EXISTING SIDEWALK HAS A NON-CONFORMING RUNNING SLOPE, CROSS SLOPE, OR WIDTH. ADJACENT CURB TAPER SHOULD MATCH THE SLOPE OF THE TRANSITION SLAB.

8). REFER TO THE DELAWARE MANUAL FOR UNIFORM TRAFFIC CONTROL DEVICES FOR DETAILS REGARDING THE LOCATION OF PEDESTRIAN PUSH BUTTONS.

DELAWARE DEPARTMENT OF TRANSPORTATION	CURB RAMP, TYPE 1 AND SECTIONS		APPROVED SIGNATURE ON FILE (CHIEF ENGINEER) 01/07/2013 (DATE)
	STANDARD NO. C-2 (2012)	SHT. 1 OF 3	RECOMMENDED SIGNATURE ON FILE (DESIGN ENGINEER) 12/20/2012 (DATE)

12/4/2012

SCALE : NTS

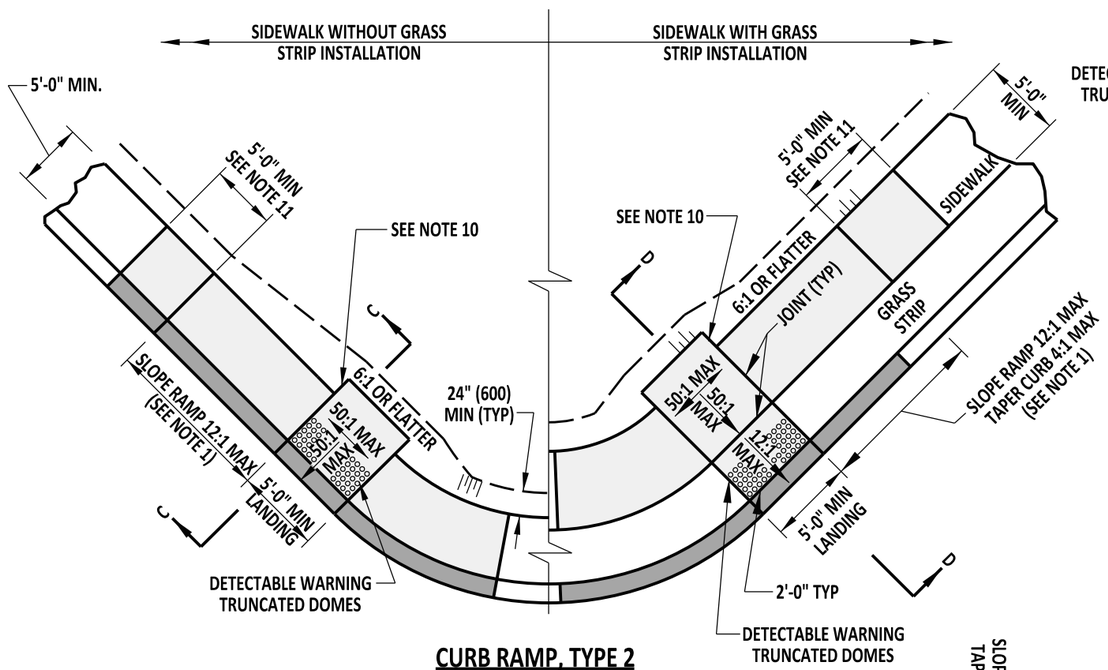

CURB RAMP, TYPE 2

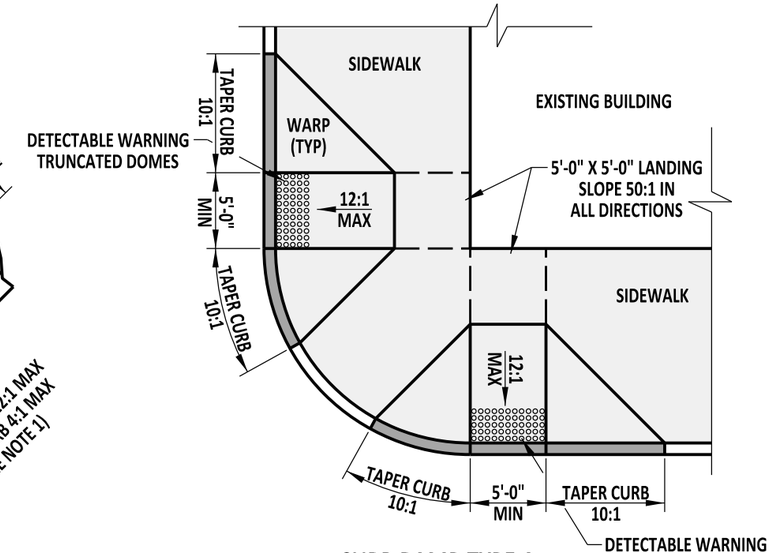

CURB RAMP,TYPE 4

PERPENDICULAR CURB RAMP

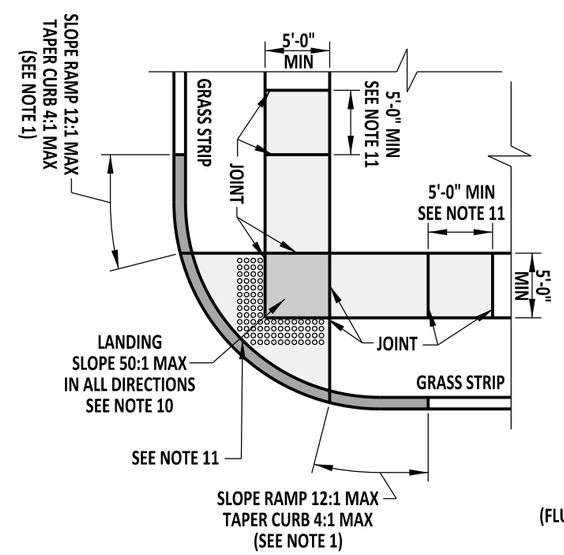

CURB RAMP, TYPE 3

DIAGONAL CURB RAMP

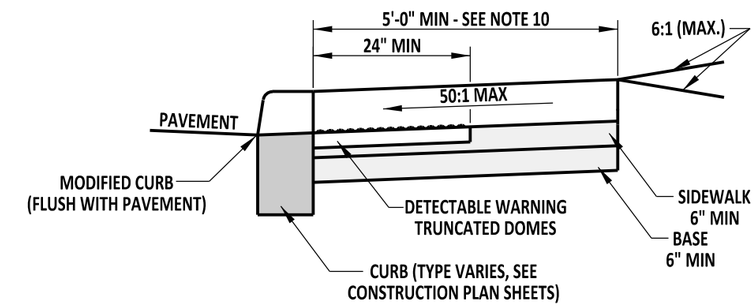

SECTION C-C

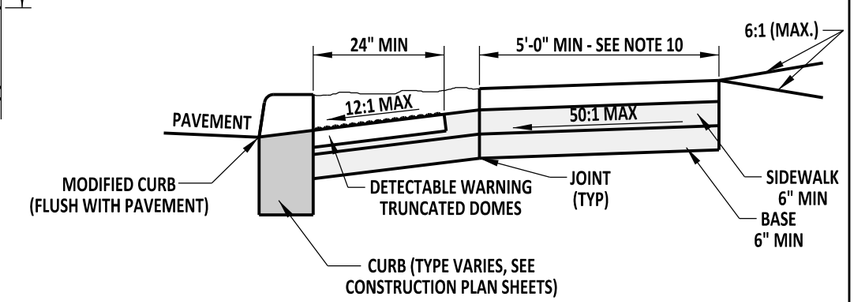

SECTION D-D

NOTES:

1). FOR ALTERATIONS WITHOUT A GRASS STRIP OR WHERE THE EXISTING ROAD PROFILE IS STEEPER THAN 7% AND A 12:1 MAXIMUM SLOPE RAMP WILL NOT MEET THE SIDEWALK GRADE WITHIN A LENGTH OF 15'-0", THE RAMP LENGTH MAY BE LIMITED TO 15'-0" AT A CONSTANT SLOPE, AND THE RAMP SLOPE ALLOWED TO EXCEED 12:1.
2). RAMP AND SIDEWALK CROSS SLOPE SHALL BE 50:1 (2%) MAXIMUM.
3). IF GRADING WILL BE STEEPER THAN 6:1 ADJACENT TO THE CURB RAMP OR SIDEWALK, THEN A TYPE 1-8 CURB OR RETAINING WALL SHOULD BE USED TO ELIMINATE THE NEED FOR THE STEEP SLOPE.
4). ENTIRE DEPRESSED AREA OF CURB SHALL HAVE DETECTABLE WARNING TRUNCATED DOMES.
5). THE MAXIMUM DIFFERENCE IN GRADE BETWEEN THE SIDEWALK OR CURB AND THE PAVEMENT SHALL BE 13%, HOWEVER 11% IS PREFERRED. SEE STANDARD NO. C-2, SHEET 1 OF 3.
6). REFER TO DELAWARE MANUAL FOR UNIFORM TRAFFIC CONTROL DEVICES FOR DETAILS REGARDING THE LOCATION OF PEDESTRIAN PUSHBUTTONS.
7). LANDING AREA SHALL BE DELINEATED WITH JOINTS.
8). THE EDGE OF THE LANDING SHALL BE A MAXIMUM OF 10'-0" FROM THE FACE OF THE CURB.
9). FOR REHABILITATION WORK, PLACE TRANSITION SLAB TO TRANSITION FROM THE NEW RAMP TO THE EXISTING SIDEWALK WHEN THE EXISTING SIDEWALK HAS A NON-CONFORMING RUNNING SLOPE, CROSS SLOPE, OR WIDTH. ADJACENT CURB SHOULD MATCH THE SLOPE OF THE TRANSITION SLAB.
10). LANDING AREAS SHALL BE EXTENDED 18" MIN BEYOND THE PEDESTRIAN PUSH BUTTON FOR ALL CURB RAMP TYPES. WHEN NO PEDESTRIAN PUSH BUTTON EXISTS, THE 18" EXTENSIN CAN BE OMITTED.
11). WHEN THE INTERSECTION OF THE TRUNCATED DOMES IS GREATER THAN 3" FROM THE BACK OF CURB, REPLACE THE INTERSECTION AREA WITH GRASS OR ANOTHER SURFACE MATERIAL.

DELAWARE DEPARTMENT OF TRANSPORTATION	CURB RAMPS, TYPES 2, 3, & 4		APPROVED	SIGNATURE ON FILE (CHIEF ENGINEER) — 01/07/2013 (DATE)
	STANDARD NO. C-2 (2012)	SHT. 2 OF 3	RECOMMENDED	SIGNATURE ON FILE (DESIGN ENGINEER) — 12/20/2012 (DATE)

12/4/2012

SCALE : NTS

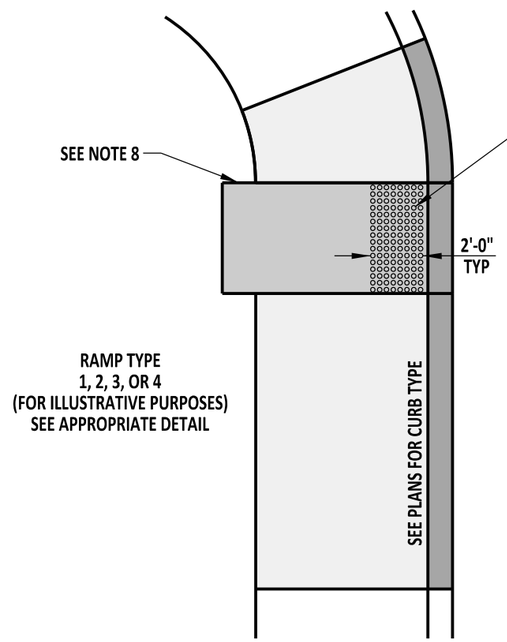

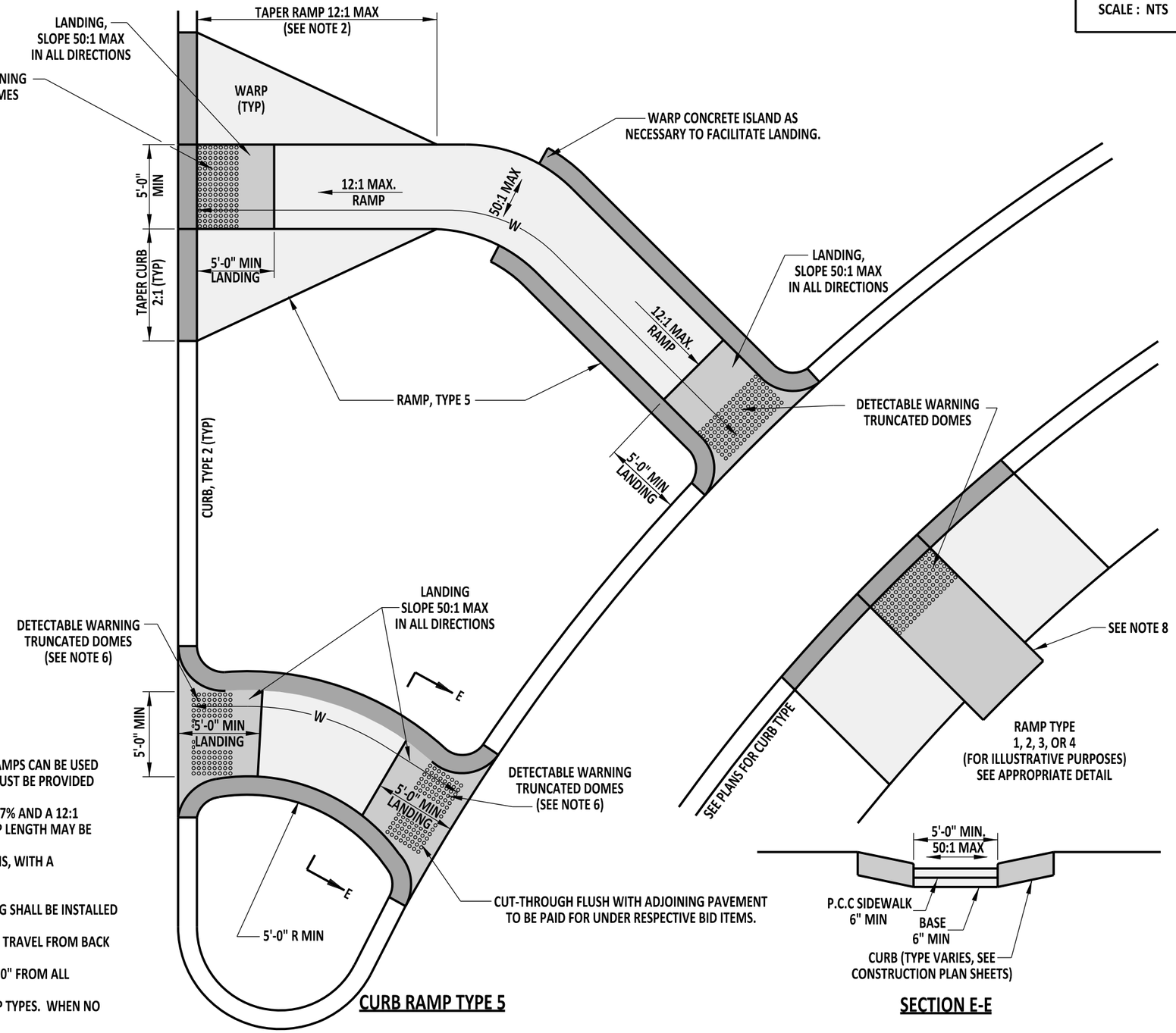

CURB RAMP TYPE 5

SECTION E-E

NOTES:

1). A CUT-THROUGH LEVEL WITH THE STREET IS THE PREFERRED TREATMENT FOR ISLANDS, ALTHOUGH, RAMPS CAN BE USED WHERE THE ISLAND WIDTH IS SUFFICIENT TO ACCOMMODATE THEM. POSITIVE SURFACE DRAINAGE MUST BE PROVIDED FOR EITHER TREATMENT. EITHER TREATMENT IS ACCEPTABLE.
2). FOR ALTERATIONS WITHOUT A GRASS STRIP OR WHERE THE EXISTING ROAD PROFILE IS STEEPER THAN 7% AND A 12:1 MAXIMUM SLOPE RAMP WIL NOT MEET THE SIDEWALK GRADE WITHIN A LENGTH OF 15'-0", THE RAMP LENGTH MAY BE LIMITED TO 15'-0" AT A CONSTANT SLOPE, AND ALLOWED TO EXCEED 12:1.
3). A CONTINUOUS PATH MUST BE PROVIDED BETWEEN ADJACENT CURB RAMPS IN ISLANDS AND MEDIANS, WITH A MAXIMUM RUNNING SLOPE OF 20:1.
4). RAMP AND SIDEWALK CROSS SLOPE SHALL BE 50:1 (2%) MAXIMUM.
5). WHERE THERE IS NO DEPRESSED CURB AT A CUT-THROUGH OR CURB RAMP, THE DETECTABLE WARNING SHALL BE INSTALLED 3" FROM THE ROADWAY PAVEMENT.
6). DETECTABLE WARNINGS SHALL BE INSTALLED WHEN THE LENGTH W IN THE DIRECTION OF PEDESTRIAN TRAVEL FROM BACK OF CURB TO BACK OF CURB 6'-0" OR GREATER.
7). PEDESTRIAN SIGNALS SHALL BE ACCESSIBLE WITH A LEVEL LANDING, WHOSE EDGE IS NO MORE THAN 10" FROM ALL PEDESTRIAN PUSH BUTTONS.
8). LANDING AREA SHALL BE EXTENDED 18" MIN BEYOND PEDESTRIAN PUSH BUTTON FOR ALL CURB RAMP TYPES. WHEN NO PEDESTRIAN PUSH BUTTON EXISTS, THE 18" EXTENSION CAN BE OMITTED.
9). LANDING AREA SHALL BE CLEARLY DELINEATED WITH JOINTS.

DELAWARE DEPARTMENT OF TRANSPORTATION	CURB RAMP, TYPE 5 & SECTIONS		APPROVED	SIGNATURE ON FILE (CHIEF ENGINEER)	01/07/2013 (DATE)
	STANDARD NO. C-2 (2012)	SHT. 3 OF 3	RECOMMENDED	SIGNATURE ON FILE (DESIGN ENGINEER)	12/20/2012 (DATE)

12/20/2012

SCALE : NTS

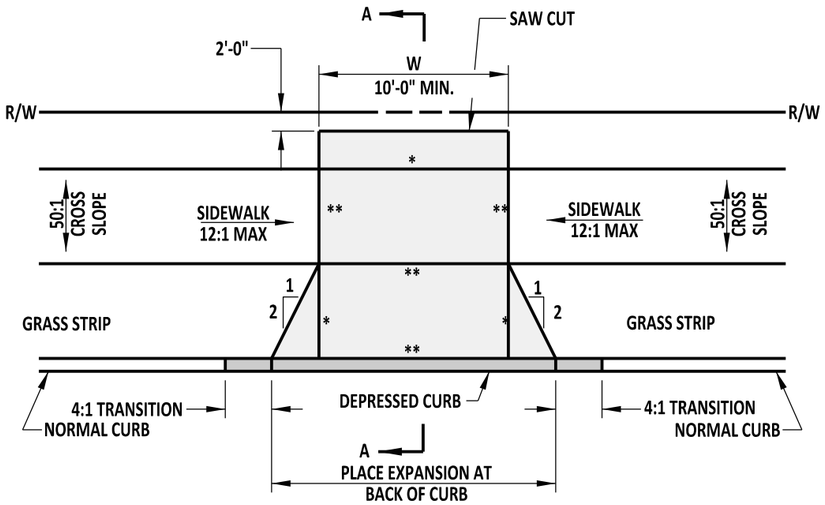

ENTRANCE WITH SIDEWALK AND GRASS STRIP

* - JOINT
** - EXPANSION MATERIAL

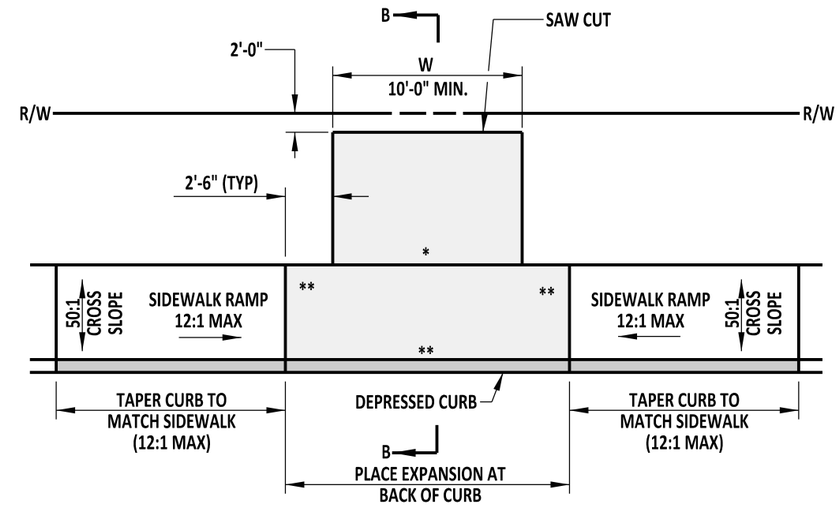

ENTRANCE WITH SIDEWALK AND NO GRASS STRIP

* - JOINT
** - EXPANSION MATERIAL

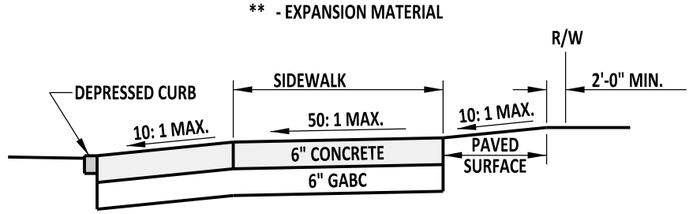

SECTION A-A

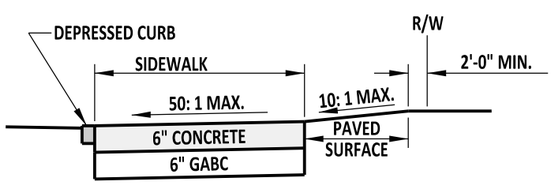

SECTION B-B

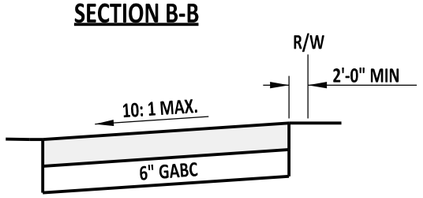

SECTION C-C

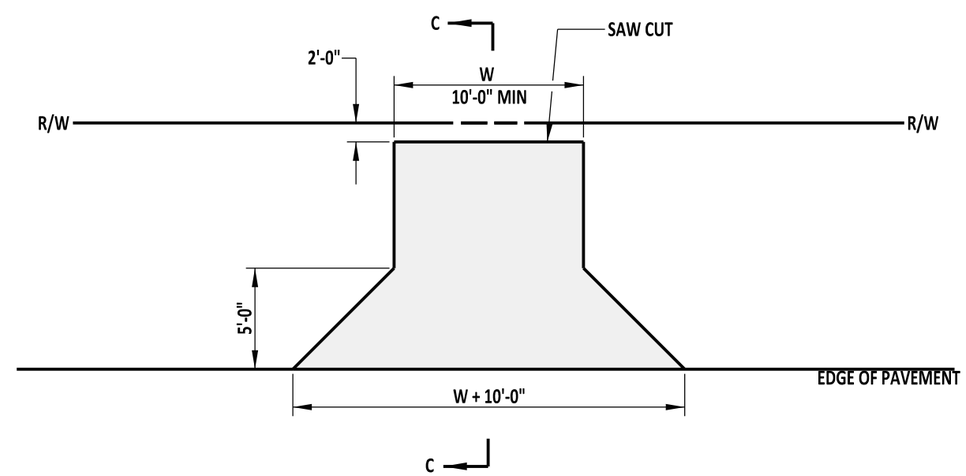

ENTRANCE WITHOUT SIDEWALK

NOTE:
IF WIDTH OF DRIVEWAY IS 15'-0" OR GREATER, THE FLARE AND EXTENSIONS CAN BE OMITTED.

DELAWARE DEPARTMENT OF TRANSPORTATION	ENTRANCES		APPROVED	SIGNATURE ON FILE (CHIEF ENGINEER) — 01/07/2013 (DATE)
	STANDARD NO. C-3 (2012)	SHT. 1 OF 1	RECOMMENDED	SIGNATURE ON FILE (DESIGN ENGINEER) — 12/20/2012 (DATE)

12/4/2012

SCALE : NTS

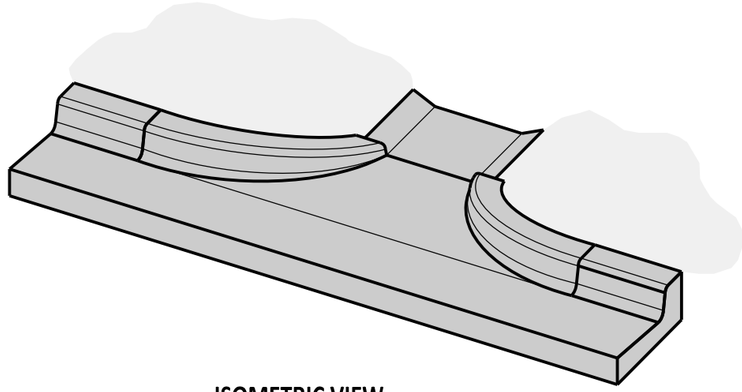

ISOMETRIC VIEW

SHOWN WITH INTEGRAL CURB & GUTTER, TYPE 1-8

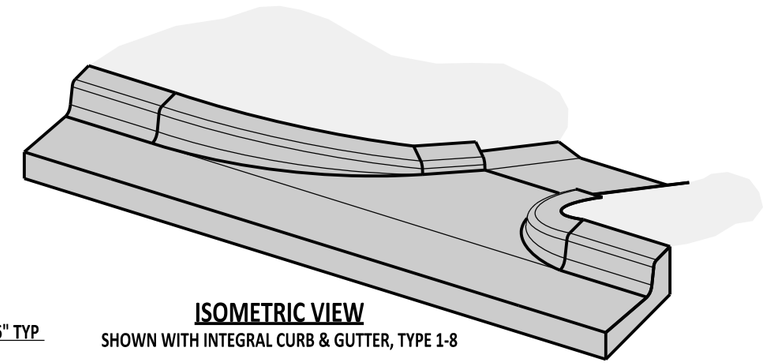

ISOMETRIC VIEW

SHOWN WITH INTEGRAL CURB & GUTTER, TYPE 1-8

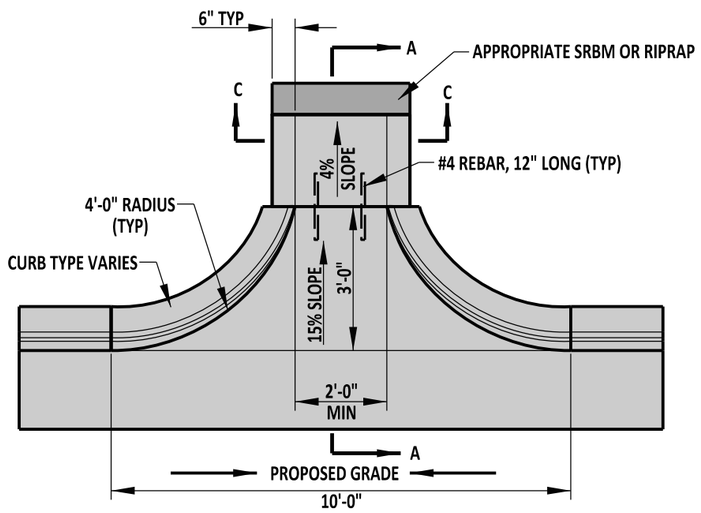

PLAN VIEW

IN SUMP LOCATION

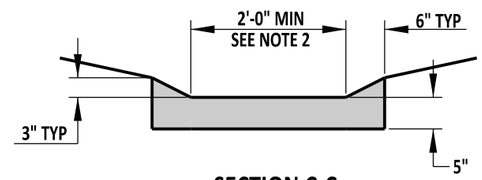

SECTION C-C

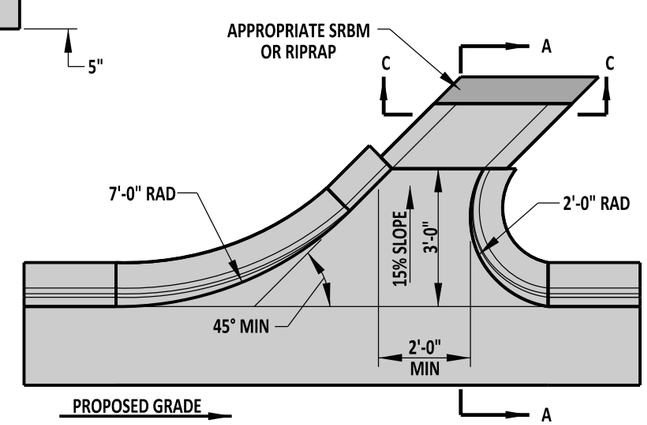

PLAN VIEW

ON GRADE OR SLOPE

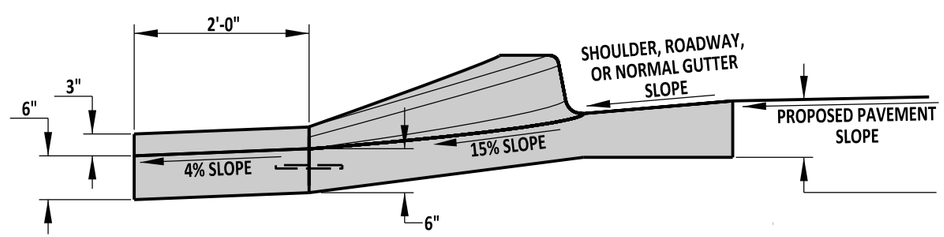

SECTION A-A

NOTES:

1). DESIGNER SHALL ESTABLISH WIDTH OF OPENING BASED ON DRAINAGE CALCULATIONS.

2). THE WIDTH OF THE APRON (SHOWN IN SECTION C-C) SHALL MATCH THE WIDTH OF THE CURB OPENING (SHOWN IN PLAN VIEW).

DELAWARE DEPARTMENT OF TRANSPORTATION	CURB OPENING DETAILS		APPROVED	SIGNATURE ON FILE (CHIEF ENGINEER)	01/07/2013 (DATE)
	STANDARD NO. C-4 (2012)	SHT. 1 OF 1	RECOMMENDED	SIGNATURE ON FILE (DESIGN ENGINEER)	12/20/2012 (DATE)

12/4/2012

SCALE : NTS

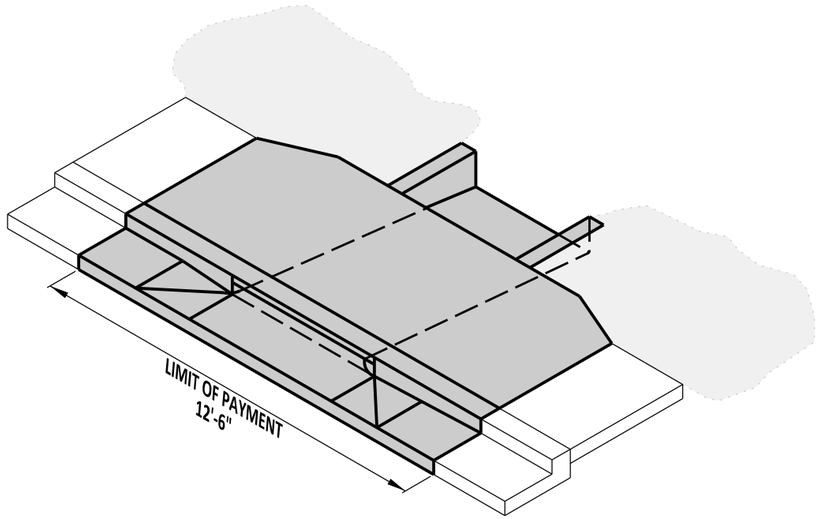

ISOMETRIC

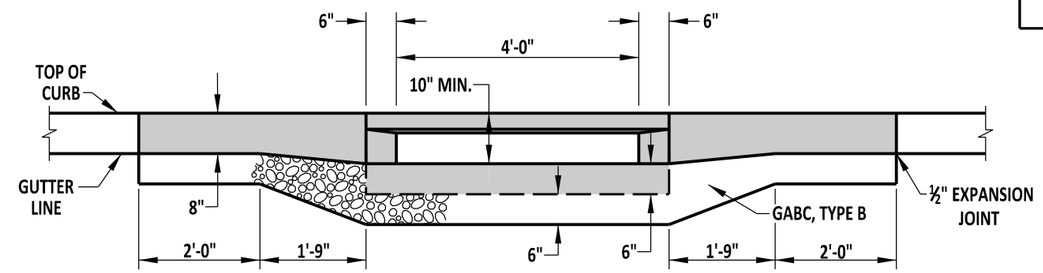

SECTION A-A

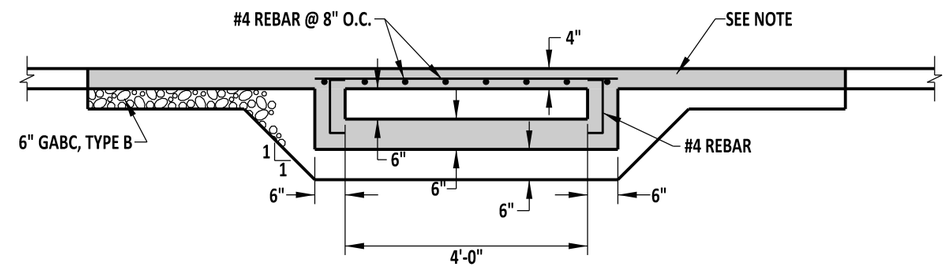

SECTION B-B

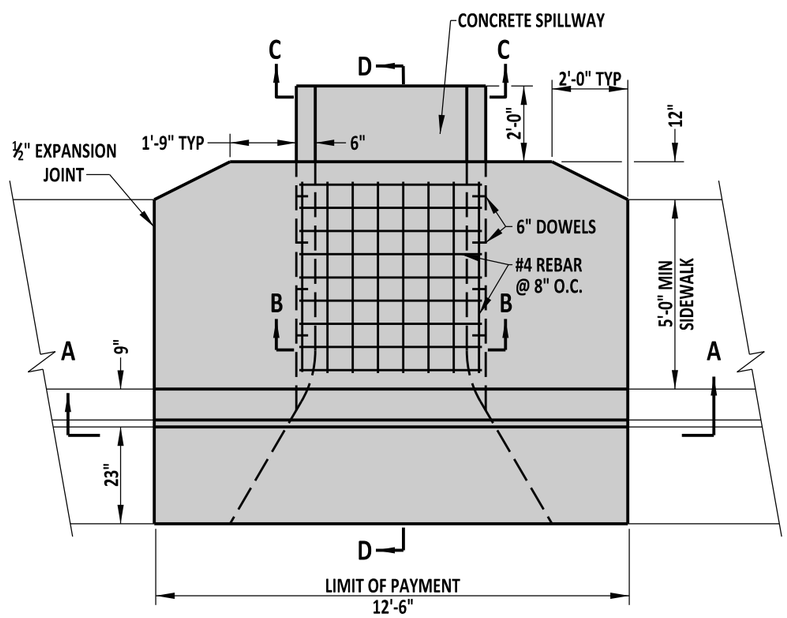

PLAN

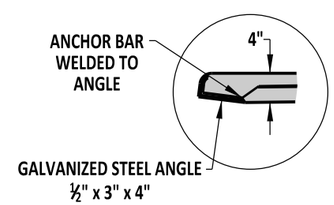

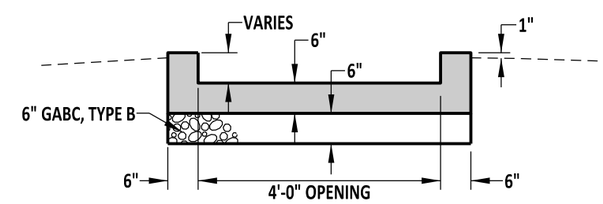

SECTION C-C

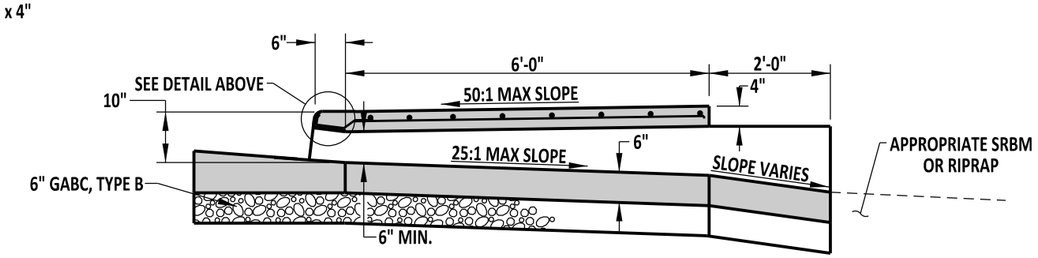

SECTION D-D

CURB / SIDEWALK OPENING

NOTE:
WHEN A GRASS STRIP IS PRESENT BETWEEN THE BACK OF CURB AND SIDEWALK, THE SIDEWALK PORTION OF THIS STRUCTURE MAY BE PRECAST. HOWEVER, WHEN THE SIDEWALK IS DIRECTLY BEHIND THE CURB, THE ENTIRE UNIT MUST BE CAST-IN-PLACE.

DELAWARE DEPARTMENT OF TRANSPORTATION	CURB OPENING WITH SIDEWALK DETAIL		APPROVED	SIGNATURE ON FILE (CHIEF ENGINEER) — 12/22/2011 (DATE)
	STANDARD NO. C-5 (2011)	SHT. 1 OF 1	RECOMMENDED	SIGNATURE ON FILE (DESIGN ENGINEER) — 12/21/2011 (DATE)

12/12/2011

SCALE : N.T.S.

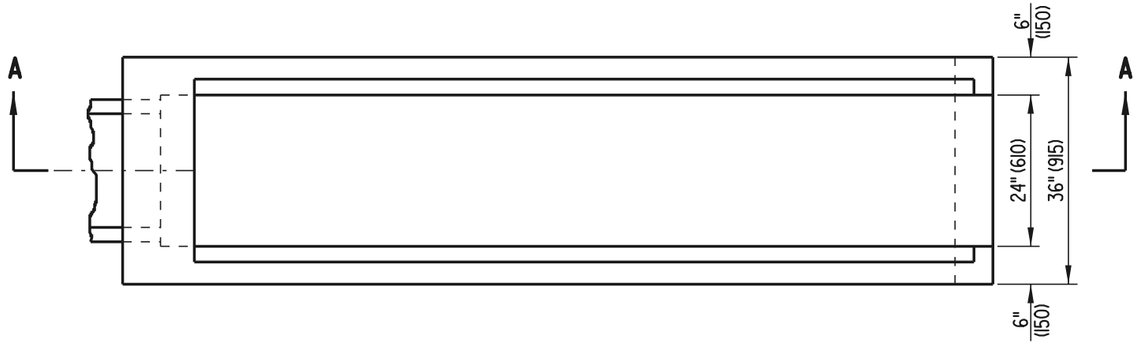

PLAN VIEW
SHOWN WITHOUT GRATE

NOTE: 6:1 SAFETY END STRUCTURE TO BE PRECAST

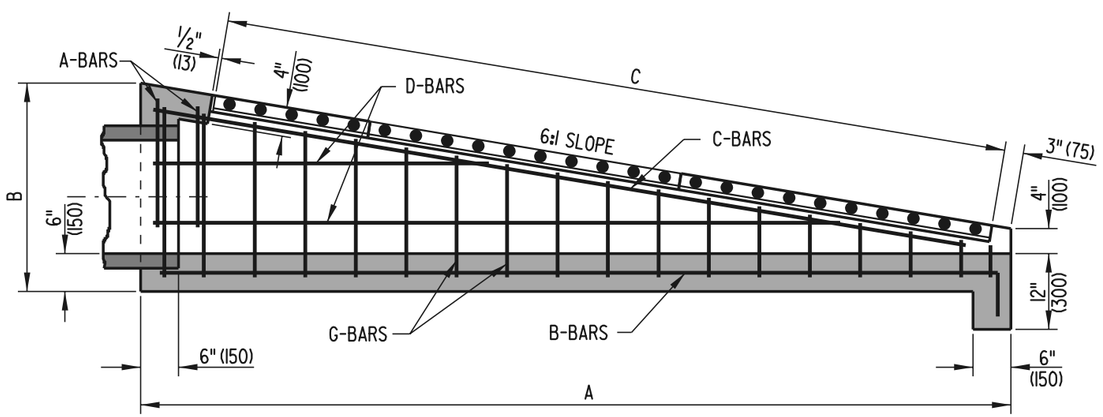

SECTION A-A

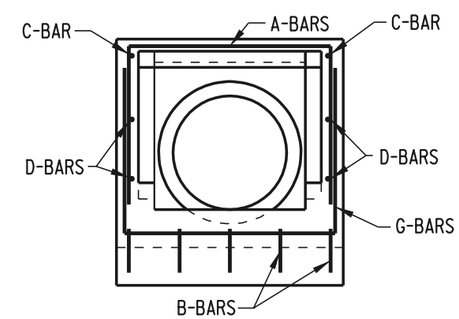

FRONT VIEW

DELAWARE DEPARTMENT OF TRANSPORTATION	6:1 SAFETY END STRUCTURE		APPROVED CHIEF ENGINEER DATE 6/18/01
	STANDARD NO. D-1 (2001)	SHT. 1 OF 2	RECOMMENDED DESIGN ENGINEER DATE 6/15/01

04/17/2001

SCALE : N.T.S.

DIMENSIONS

PIPE SIZE	A	B	C
15" (375)	9'-6" (2895)	2'-5" (735)	8'-4" (2540)
18" (450)	11'-6" (3505)	2'-9" (840)	10'-5" (3175)
21" (525) OR 24" (600)	14'-4" (4370)	3'-2⅝" (980)	12'-6" (3810)

BENDING DIAGRAM

PIPE SIZE	X
15" (375)	9'-2" (2795)
18" (450)	11'-2" (3405)
21" (525) OR 24" (610)	14'-0" (4265)

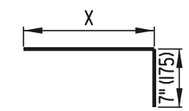

B-BARS

PIPE SIZE	Y
15" (375)	VARIES 25" (635) TO 4" (100)
18" (450)	VARIES 29" (735) TO 4" (100)
21" (525) OR 24" (610)	VARIES 34" (865) TO 4" (100)

G-BARS

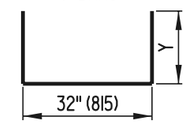

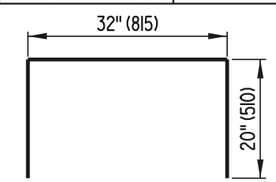

A-BARS

APPROXIMATE QUANTITIES

PIPE SIZE	CONCRETE FT³ (m³)		REINF. STEEL LBS. (kg)	NO. OF GRATES	LENGTH TO BE CUT FROM 1 GRATE	WEIGHT OF FULL SIZE GRATE LBS. (kg)	WEIGHT OF CUT GRATE LBS. (kg)
	CONC. PIPE	C.M. PIPE					
15" (375)	25 (0.708)	25.43 (0.720)	121.12 (54.94)	2	--	270.92 (122.89)	--
18" (450)	31.5 (0.892)	32.07 (0.908)	156.7 (71.08)	3	2'-1" (635)	270.92 (122.89)	135.47 (61.45)
21" (525) OR 24" (600)	40.75 (1.154)	39.87 (1.129)	194.0 (88.00)	3	--	270.92 (122.89)	--

SCHEDULE OF REINFORCING STEEL

PIPE SIZE	A-BARS				B-BARS				C-BARS				D-BARS				G-BARS			
	SIZE	NO.	SPA.	LENGTH	SIZE	NO.	SPA.	LENGTH	SIZE	NO.	SPA.	LENGTH	SIZE	NO.	SPA.	LENGTH	SIZE	NO.	SPA.	LENGTH
15" (375)	#4 (#13)	2	8" (200)	72" (1830)	#4 (#13)	5	8" (200)	9'-9" (2970)	#4 (#13)	2	-	9'-3" (2820)	#4 (#13)	4	8" (200)	VARIES 50" (1270) TO 100" (2540)	#4 (#13)	15	8" (200)	VARIES 40" (1015) TO 82" (2085)
18" (450)	#4 (#13)	2	8" (200)	72" (1830)	#4 (#13)	5	8" (200)	11'-9" (3580)	#4 (#13)	2	-	11'-5" (3480)	#4 (#13)	6	8" (200)	VARIES 43½" (1105) TO 130½" (3315)	#4 (#13)	18	8" (200)	VARIES 40" (1015) TO 90" (2285)
21" (525) OR 24" (600)	#4 (#13)	2	8" (200)	72" (1830)	#4 (#13)	5	8" (200)	14'-7" (4445)	#4 (#13)	2	-	14'-3" (4345)	#4 (#13)	6	8" (200)	VARIES 51" (1295) TO 153" (3885)	#4 (#13)	22	8" (200)	VARIES 40" (1015) TO 100" (2540)

DELAWARE
DEPARTMENT OF TRANSPORTATION

6:1 SAFETY END STRUCTURE

STANDARD NO. D-1 (2001) SHT. 2 OF 2

APPROVED CHIEF ENGINEER DATE 6/18/01

RECOMMENDED DESIGN ENGINEER DATE 6/15/01

04/17/2001

SCALE : N.T.S.

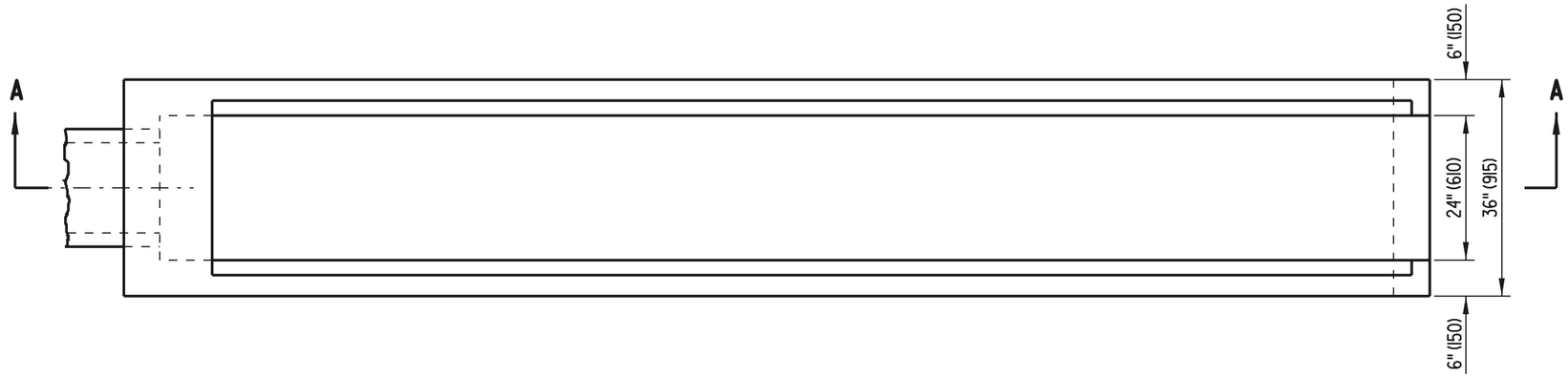

PLAN VIEW
SHOWN WITHOUT GRATE

NOTE: 10:1 SAFETY END STRUCTURE TO BE PRECAST

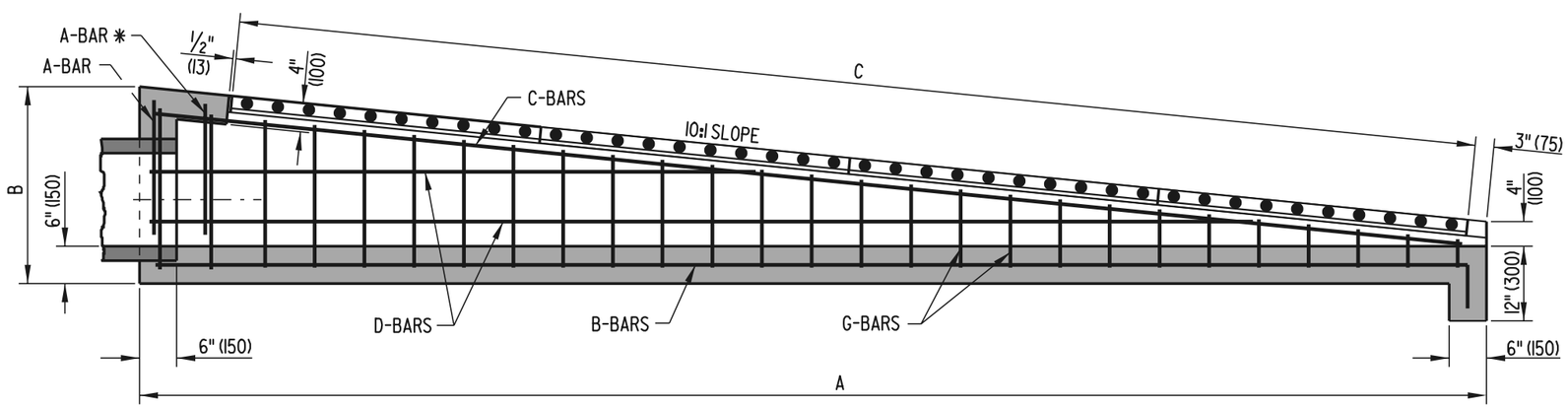

SECTION A-A

* REQUIRED ONLY FOR PIPE SIZE OF 21" (525) OR 24" (600)

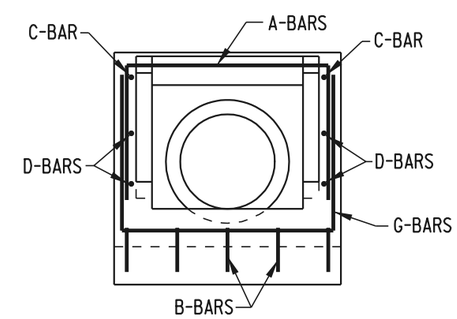

FRONT VIEW

DELAWARE DEPARTMENT OF TRANSPORTATION	10:1 SAFETY END STRUCTURE		APPROVED [signature] CHIEF ENGINEER 6/18/01 DATE
	STANDARD NO. D-2 (2001)	SHT. 1 OF 2	RECOMMENDED [signature] DESIGN ENGINEER 6/15/01 DATE

04/17/2001

SCALE : N.T.S.

DIMENSIONS

PIPE SIZE	A	B	C
15" (375)	15'-4" (4675)	2'-4 3/8" (720)	14'-7" (4445)
18" (450)	19'-6" (5945)	2'-9 3/8" (850)	18'-9" (5715)
21" (525) OR 24" (600)	24'-0" (7315)	3'-2 13/16" (985)	22'-11" (6985)

BENDING DIAGRAM

PIPE SIZE	X
15" (375)	15'-0" (4570)
18" (450)	19'-2" (5840)
21" (525) OR 24" (600)	23'-8" (7215)

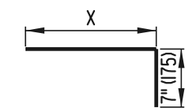

B-BARS

PIPE SIZE	Y
15" (375)	VARIES 21 1/2" (545) TO 4" (100)
18" (450)	VARIES 26 7/16" (670) TO 4" (100)
21" (525) OR 24" (600)	VARIES 31 3/4" (805) TO 4" (100)

G-BARS

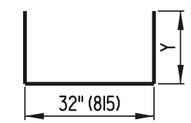

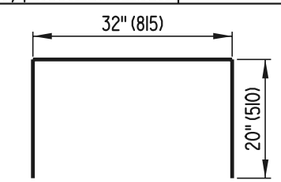

A-BARS

APPROXIMATE QUANTITIES

PIPE SIZE	CONCRETE FT³ (m³)		REINF. STEEL LBS. (kg)	NO. OF GRATES	LENGTH TO BE CUT FROM 1 GRATE	WEIGHT OF FULL SIZE GRATE LBS. (kg)	WEIGHT OF CUT GRATE LBS. (kg)
	CONC. PIPE	C.M. PIPE					
15" (375)	41.35 (1.171)	41.78 (1.183)	175.0 (79.38)	4	2'-1" (635)	270.92 (122.89)	135.47 (61.45)
18" (450)	50.11 (1.419)	50.68 (1.435)	227.0 (102.98)	5	2'-1" (635)	270.92 (122.89)	135.47 (61.45)
21" (525) OR 24" (600)	69.43 (1.966)	70.31 (1.991)	310.4 (140.79)	6	2'-1" (635)	270.92 (122.89)	135.47 (61.45)

SCHEDULE OF REINFORCING STEEL

PIPE SIZE	A-BARS				B-BARS				C-BARS				D-BARS				G-BARS			
	SIZE	NO.	SPA.	LENGTH	SIZE	NO.	SPA.	LENGTH	SIZE	NO.	SPA.	LENGTH	SIZE	NO.	SPA.	LENGTH	SIZE	NO.	SPA.	LENGTH
15" (375)	#4 (#13)	1	-	72" (1830)	#4 (#13)	5	8" (200)	15'-7" (4750)	#4 (#13)	2	-	15'-1 1/16" (4600)	#4 (#13)	4	8" (200)	VARIES 72 13/16" (1850) TO 145 5/8" (3700)	#4 (#13)	24	8" (200)	VARIES 40" (1015) TO 75 11/16" (1920)
18" (450)	#4 (#13)	1	-	72" (1830)	#4 (#13)	5	8" (200)	19'-9" (6020)	#4 (#13)	2	-	19'-3 3/8" (5875)	#4 (#13)	4	8" (200)	VARIES 89 5/8" (2275) TO 179 3/16" (4550)	#4 (#13)	30	8" (200)	VARIES 40" (1015) TO 85 3/4" (2180)
21" (525) OR 24" (600)	#4 (#13)	2	-	72" (1830)	#4 (#13)	5	8" (200)	24'-3" (7390)	#4 (#13)	2	-	23'-9 5/8" (7255)	#4 (#13)	6	8" (200)	VARIES 80 3/4" (2050) TO 242 1/8" (6150)	#4 (#13)	37	8" (200)	VARIES 40" (1015) TO 96 9/16" (2455)

DELAWARE
DEPARTMENT OF TRANSPORTATION

10:1 SAFETY END STRUCTURE

STANDARD NO. D-2 (2001) SHT. 2 OF 2

APPROVED [signature] CHIEF ENGINEER DATE 6/18/01

RECOMMENDED [signature] DESIGN ENGINEER DATE 6/15/01

04/17/2001

SCALE : N.T.S.

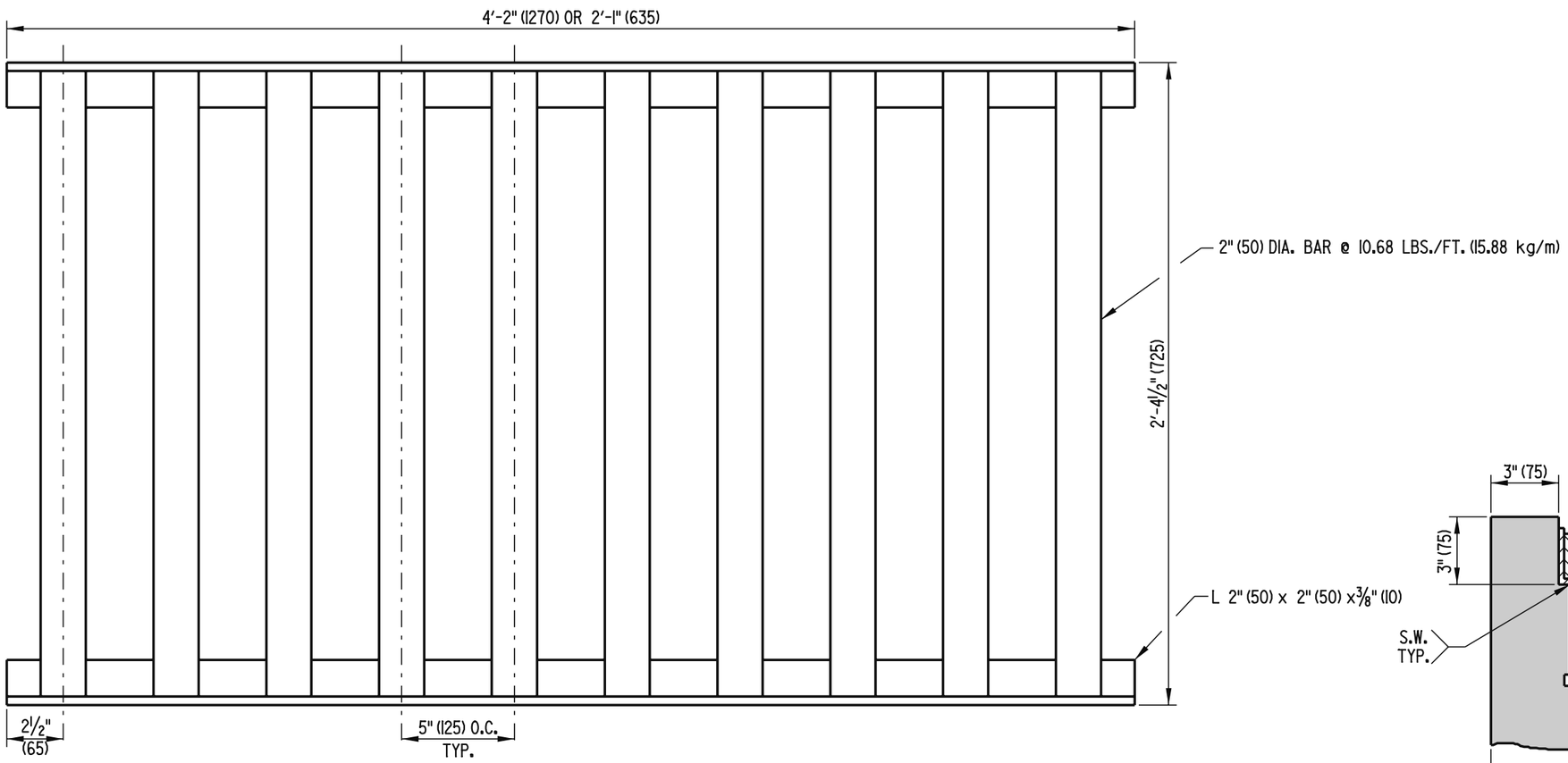

GRATE DETAIL

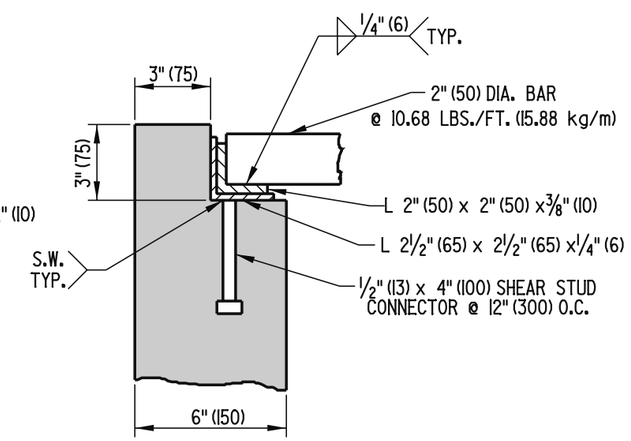

FRAME & GRATE ASSEMBLY DETAIL

DELAWARE DEPARTMENT OF TRANSPORTATION	SAFETY GRATES		APPROVED Carolann Wicks CHIEF ENGINEER — DATE 12/5/05
	STANDARD NO. D-3 (2005)	SHT. 1 OF 2	RECOMMENDED [illegible] DESIGN ENGINEER — DATE 11/29/05

11/23/2005

SCALE : N.T.S.

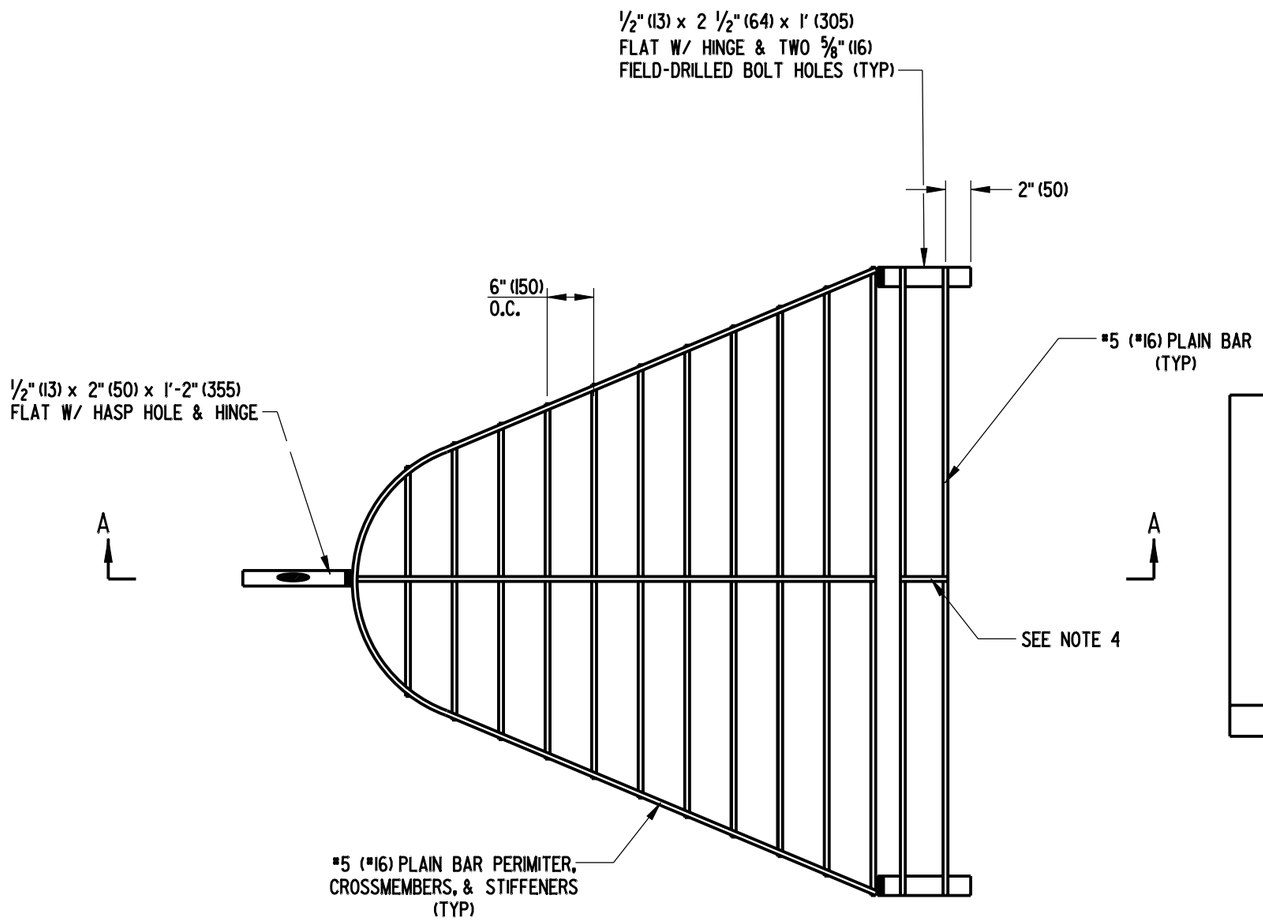

PLAN VIEW

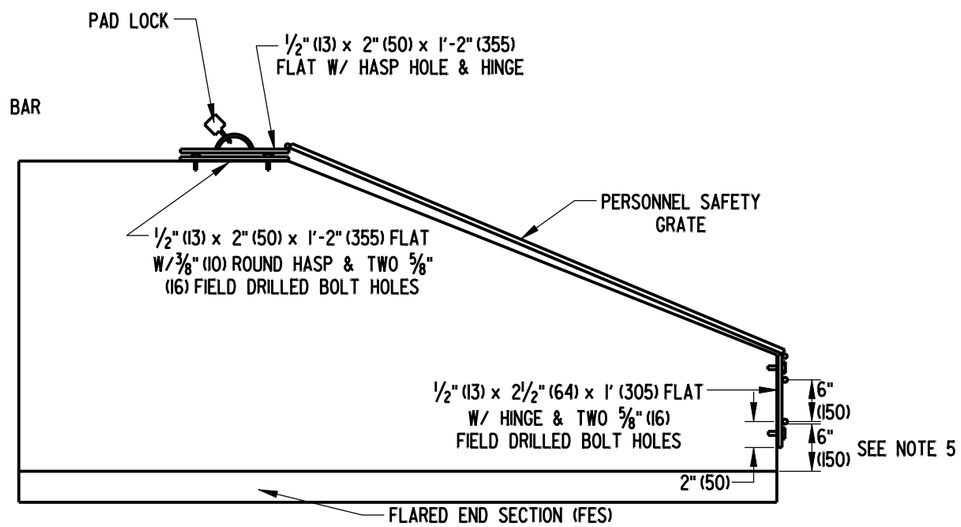

SECTION A-A

NOTES:

1). PERSONNEL SAFETY GRATES (PSG) SHALL ONLY BE INSTALLED ON THE INLETS OF STORM WATER PIPES 12" (300) OR LARGER IN DIAMETER THAT ARE NOT STRAIGHT FROM THE INLET TO THE OPEN OUTLET, REGARDLESS OF THE LENGTH.
2). THE GRATE SHALL BE MADE TO FIT THE OUTSIDE PERIMETER OF THE FLARED END SECTION (FES) ± 1/2" (13).
3). ALL BOLT HOLES ARE TO BE DRILLED IN THE FIELD.
4). A STIFFENER IS TO BE INSTALLED WHERE TWO OR MORE BARS ARE USED.
5). BOTTOM BAR SHALL BE 6" (150) ABOVE INVERT OF FES.
6). ALL HARDWARE ATTACHED TO CONCRETE SHALL BE ATTACHED USING APPROVED TAMPER PROOF ANCHORS.

DELAWARE DEPARTMENT OF TRANSPORTATION	SAFETY GRATES		APPROVED CHIEF ENGINEER 10/24/07 DATE
	STANDARD NO. D-3 (2007)	SHT. 2 OF 2	RECOMMENDED DESIGN ENGINEER 10/23/07 DATE

08/01/2007