SCALE : N.T.S.

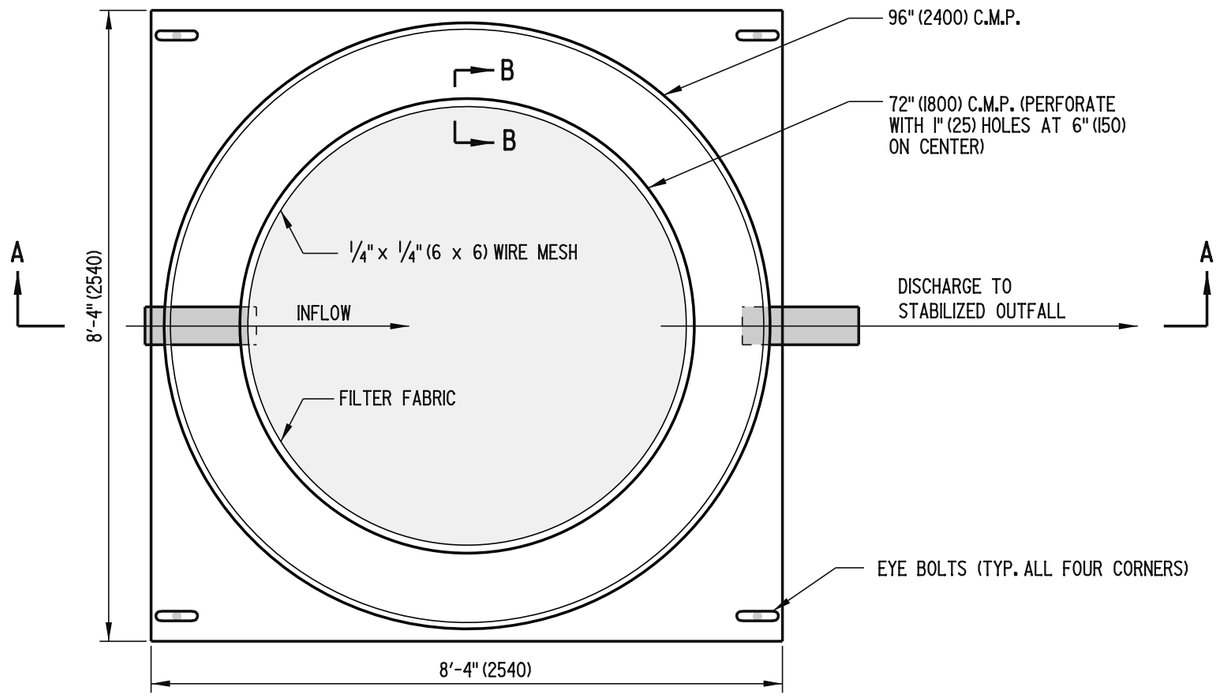

PLAN

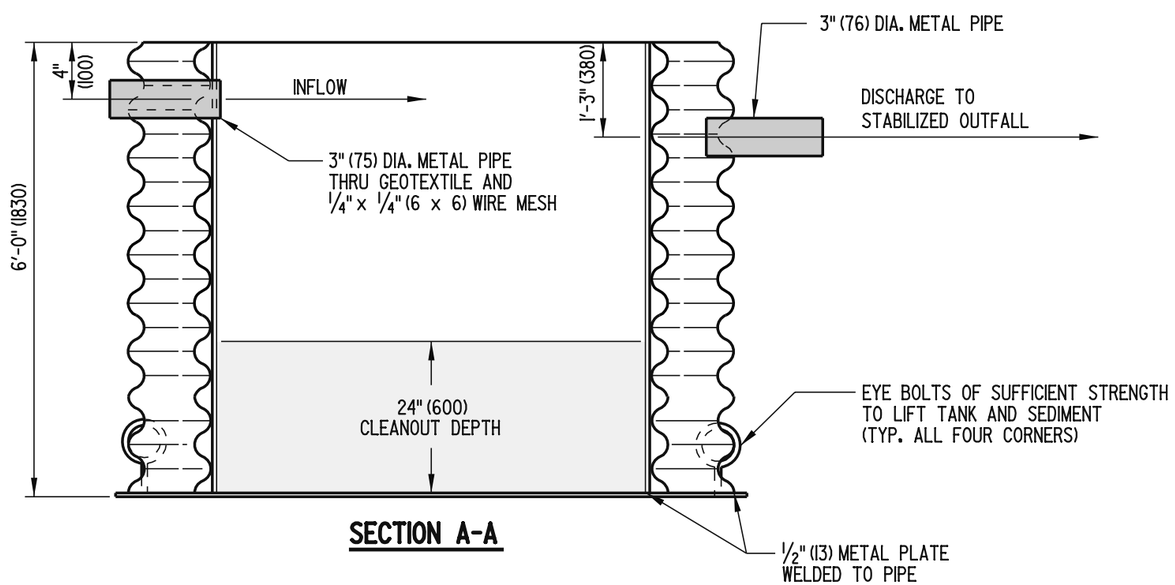

SECTION A-A

NOTES:

1). THE PORTABLE SEDIMENT TANK SHOWN MAY BE USED IN SITES WHERE SPACE IS LIMITED TO CONSTRUCT A DEWATERING BASIN.

2). THE MAXIMUM PUMP DISCHARGE INTO THIS TYPICAL PORTABLE SEDIMENT TANK SHALL BE 425 GALLONS PER MINUTE (26 LITERS PER SECOND). THE FILTER FABRIC SHALL BE REPLACED WHEN THE PORTABLE SEDIMENT TANK CAN NO LONGER ALLOW THIS FLOW RATE, WHEN THERE IS A TEAR, OR WHEN DIRECTED BY THE ENGINEER.

3). SEVERAL UN-CONNECTED OR CONNECTED IN PARALLEL PORTABLE SEDIMENT TANKS MAY BE USED WHEN A HIGHER FLOW RATE IS NEEDED TO DE-WATER THE JOB.

4). OTHER DESIGNS MAY BE USED PROVIDED THE HYDRAULIC DESIGN IS SUBMITTED TO AND APPROVED BY THE STORMWATER ENGINEER.

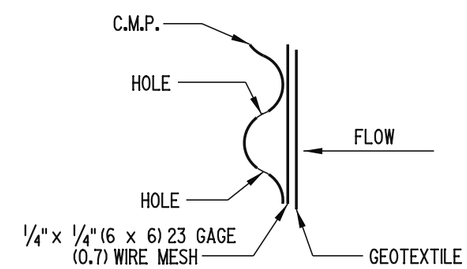

SECTION B-B

DELAWARE DEPARTMENT OF TRANSPORTATION	PORTABLE SEDIMENT TANK		APPROVED Carolann Wicks CHIEF ENGINEER 12/5/05 DATE
	STANDARD NO. E-24 (2005)	SHT. 1 OF 1	RECOMMENDED [signature] DESIGN ENGINEER 11/29/05 DATE

09/08/2005

SCALE : N.T.S.

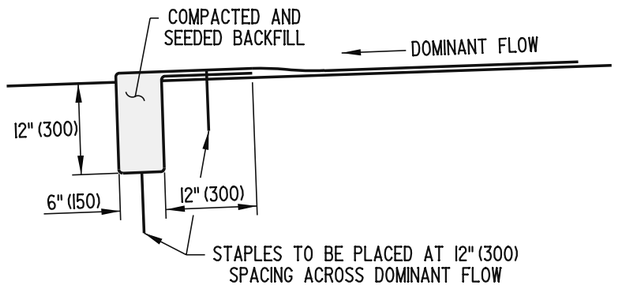

INITIAL TRENCH ANCHOR DETAIL

APPLIED AT THE DOWNSTREAM END OF DITCH

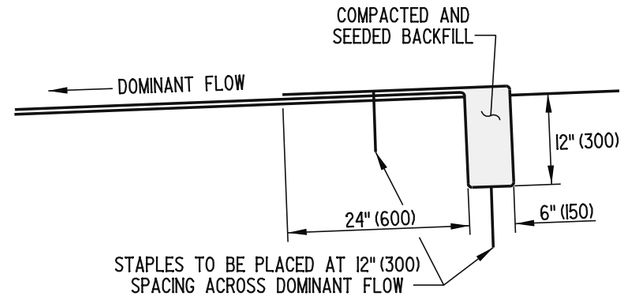

TERMINAL TRENCH ANCHOR DETAIL

APPLIED AT THE UPSTREAM END OF DITCH

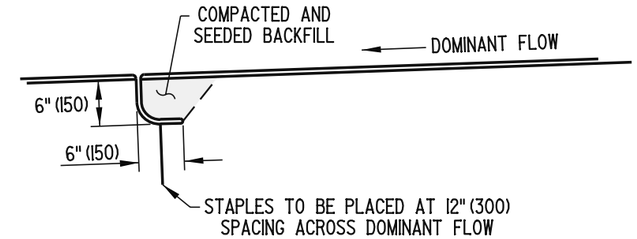

CHECK SLOT DETAIL

(AS NEEDED PER PLANS)

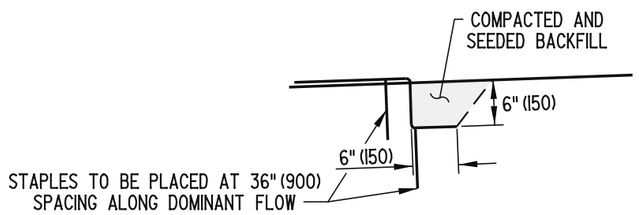

LONGITUDINAL TRENCH ANCHOR DETAIL

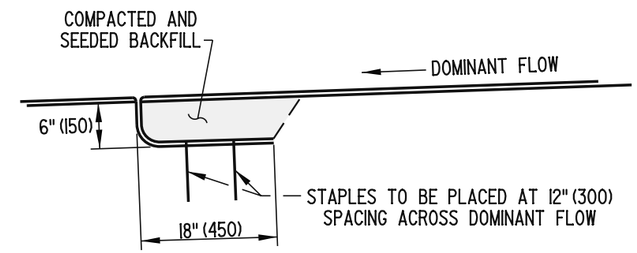

OVERLAP DETAIL

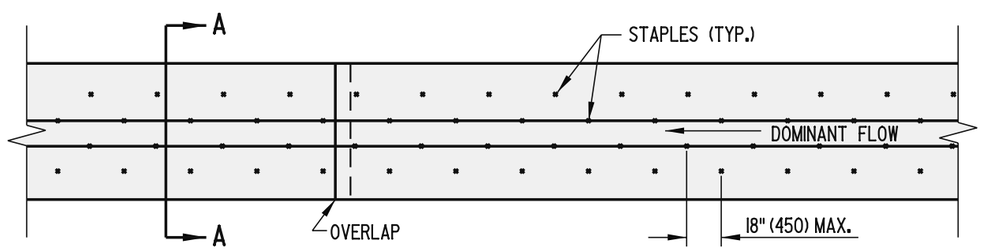

STABILIZATION OF DITCHES PLAN

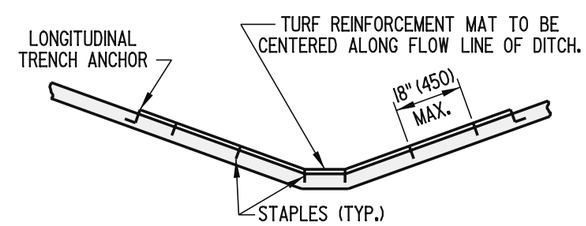

STABILIZATION OF DITCHES SECTION A-A

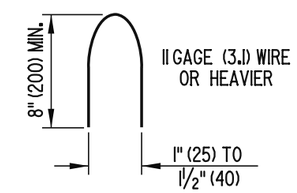

STAPLE DETAIL

NOTES:
1. ADDITIONAL STAPLES NOT SHOWN ARE REQUIRED AT OVERLAPS, ENDS, CHECK SLOTS AND EDGES. SEE APPROPRIATE DETAILS FOR STAPLE PLACEMENT.
2. STAPLES ARE TO BE STAGGERED.
3. TOPSOIL UNDER TURF REINFORCEMENT MAT IS TO BE TRACKED AND SEEDED.

DELAWARE DEPARTMENT OF TRANSPORTATION	TURF REINFORCEMENT MAT APPLICATIONS		APPROVED Carolann Wicks (CHIEF ENGINEER) 12/5/05 (DATE)
	STANDARD NO. E-25 (2005)	SHT. 1 OF 1	RECOMMENDED (DESIGN ENGINEER) 11/29/05 (DATE)

09/08/2005

SCALE : N.T.S.

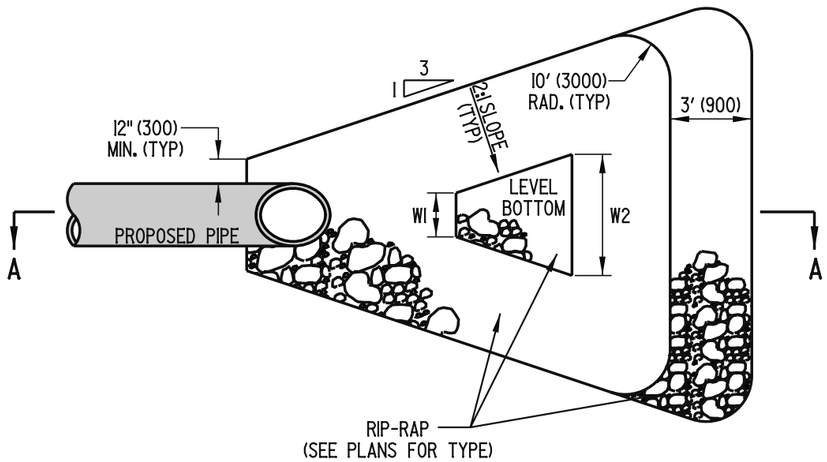

PLAN VIEW

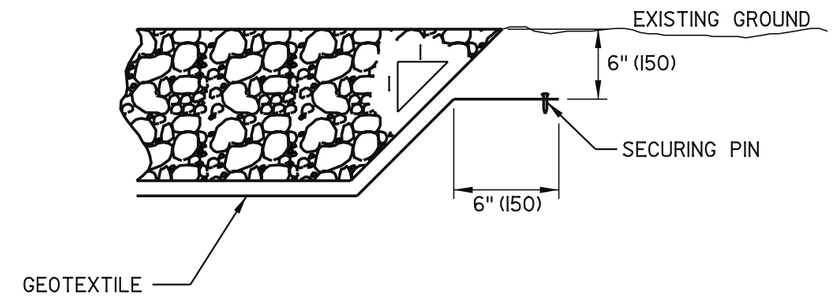

DETAIL B

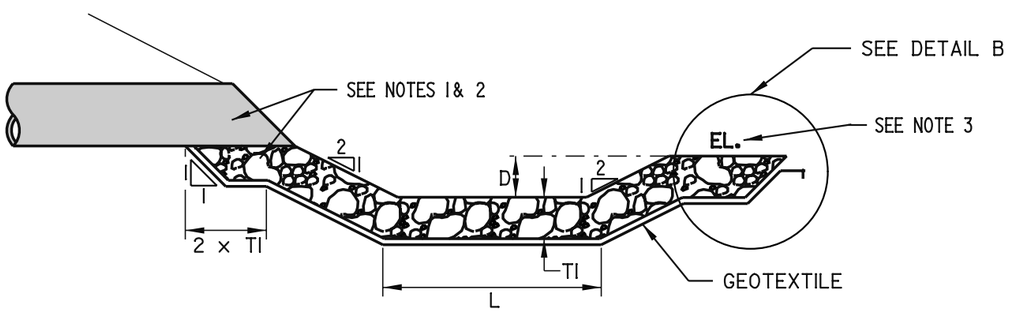

SECTION A-A

NOTES:

1. RIPRAP IS TO BE PLACED PRIOR TO PLACING PIPE.
2. PLACE DELAWARE NO. 3 STONE UNDER PIPE.
3. ELEVATION (EL.) SHOULD NOT BE HIGHER THAN PIPE INVERT.
4. REFER TO THE PIPE ENERGY DISSIPATOR SCHEDULE ON THE CONSTRUCTION PLANS FOR THE VALUE OF DIMENSION VARIABLES.

DELAWARE DEPARTMENT OF TRANSPORTATION	RIPRAP ENERGY DISSIPATOR DETAIL		APPROVED CHIEF ENGINEER — DATE 10/10/06
	STANDARD NO. E-26 (2006)	SHT. 1 OF 1	RECOMMENDED DESIGN ENGINEER — DATE 10/9/06

08/04/2006

SCALE : N.T.S.

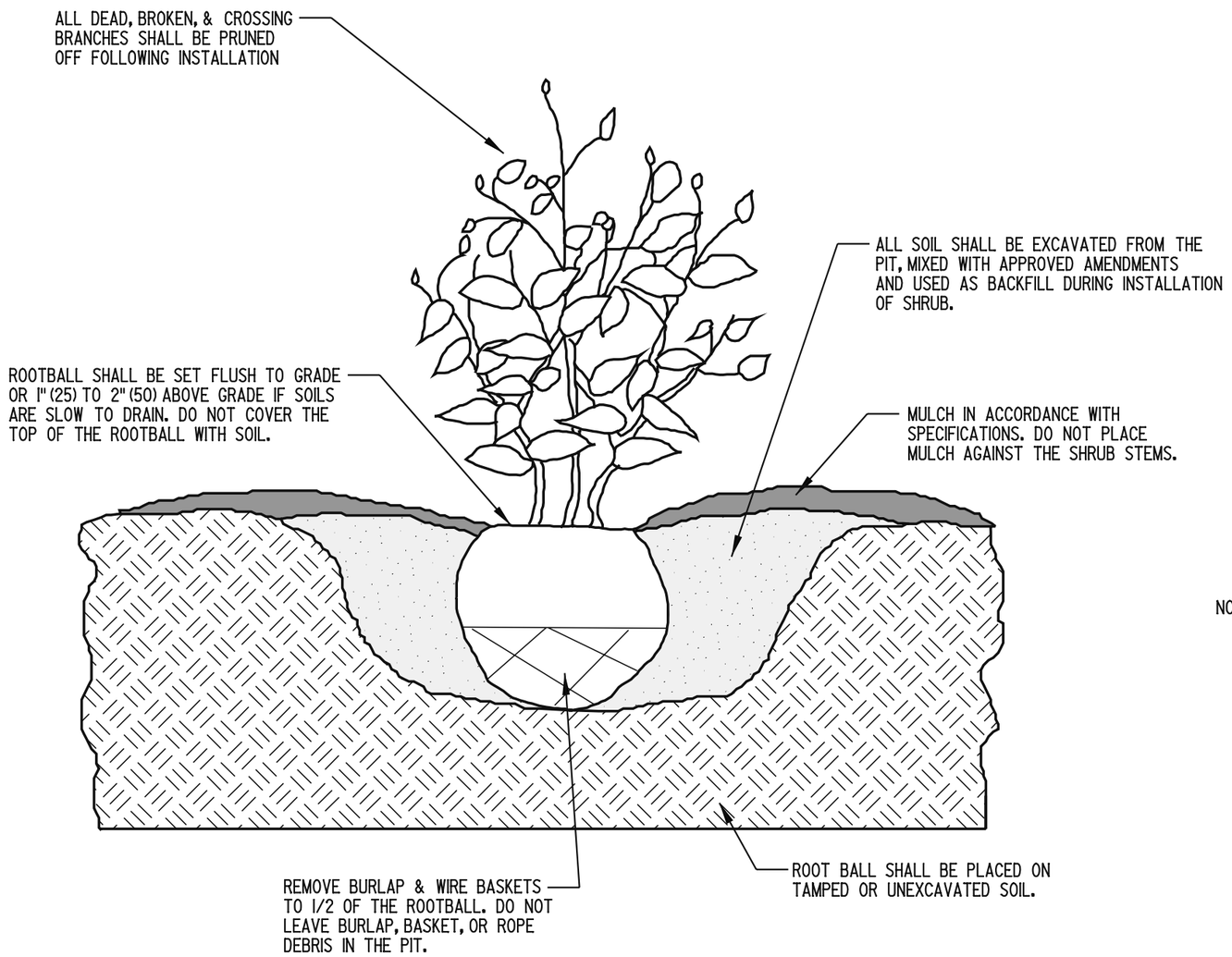

NOTES:

1). BASE OF PLANTING PIT SHALL BE A MINIMUM WIDTH OF TWICE THE ROOT BALL SIZE AND A MAXIMUM OF THREE TIMES THE ROOT BALL SIZE.
2). SHRUBS SHALL BE INSTALLED IN MASSES OF NO LESS THAN 3 PLANTS. A MINIMUM OF 6' (1800) WIDTH IS REQUIRED FROM THE BACK OF CURB TO THE EDGE OF SIDEWALK FOR INSTALLATION OF SHRUBS.
3). ALL PRUNING SHALL BE DONE BY AN I.S.A. CERTIFIED ARBORIST, CERTIFIED NURSERY PROFESSIONAL, OR UNDER THE DIRECTION THEREOF. DO NOT HEAVILY PRUNE SHRUBS AT PLANTING.
4). AUGERED HOLES SHALL BE HAND DUG TO FINAL WIDTH AND TO ELIMINATE GLAZING.
5). ALL SHRUB MASSES SHALL BE MULCHED AS ONE CONTINUOUS BED.

ROADSIDE SHRUB PLANTING DETAIL

DELAWARE DEPARTMENT OF TRANSPORTATION	PLANTING DETAILS		APPROVED CHIEF ENGINEER — DATE 10/10/06
	STANDARD NO. L-1 (2006)	SHT. 1 OF 3	RECOMMENDED DESIGN ENGINEER — DATE 10/9/06

08/04/2006

SCALE : N.T.S.

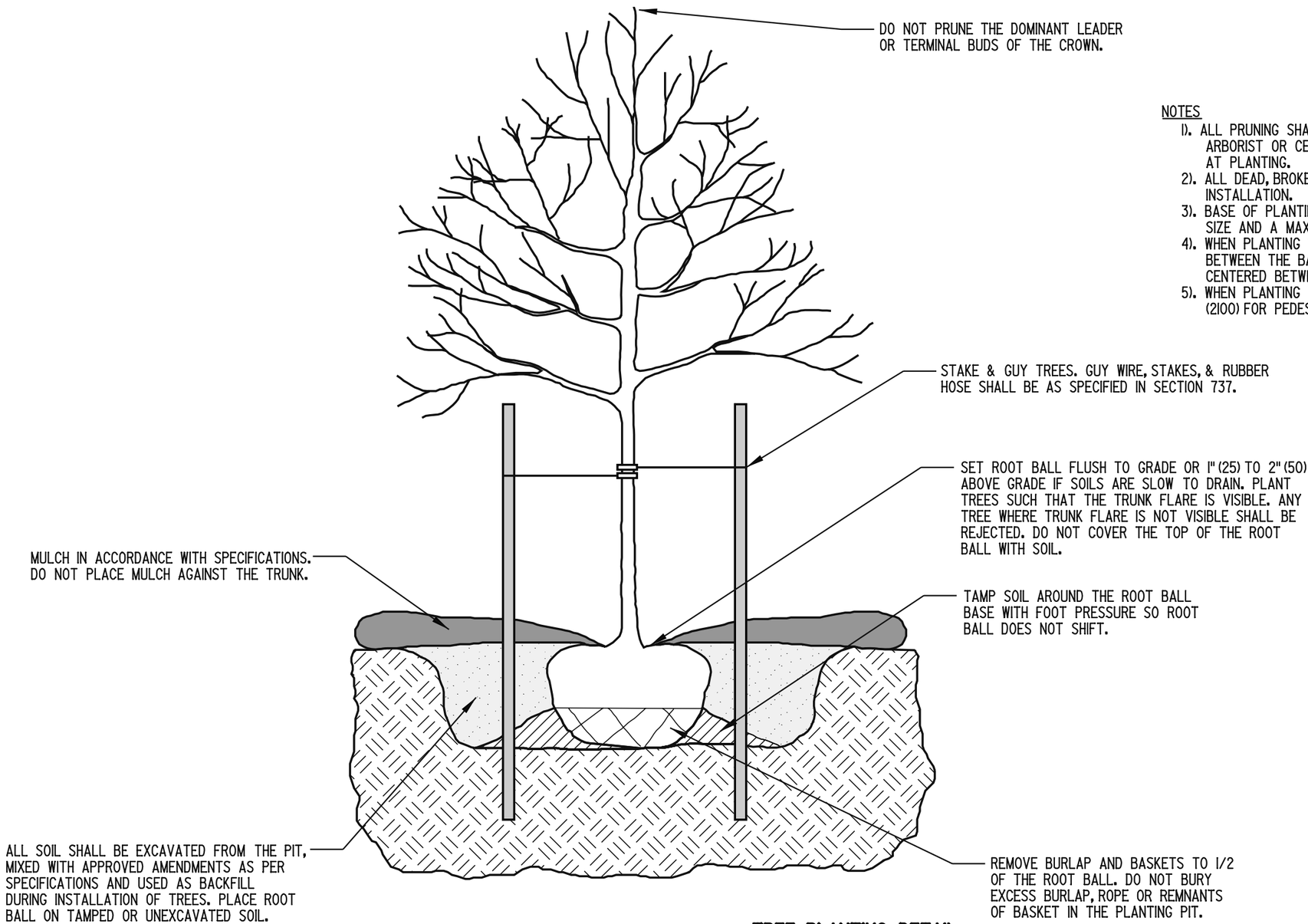

NOTES

1). ALL PRUNING SHALL BE DONE BY OR UNDER THE DIRECTION OF, AN I.S.A. CERTIFIED ARBORIST OR CERTIFIED NURSERY PROFESSIONAL. DO NOT HEAVILY PRUNE TREES AT PLANTING.
2). ALL DEAD, BROKEN, & CROSSING BRANCHES SHALL BE PRUNED OFF FOLLOWING INSTALLATION.
3). BASE OF PLANTING PIT SIZE SHALL BE A MINIMUM WIDTH OF TWICE THE ROOT BALL SIZE AND A MAXIMUM OF THREE TIMES THE ROOT BALL SIZE.
4). WHEN PLANTING TREES ALONG STREETS, THERE MUST BE A MINIMUM OF 6' (1800) BETWEEN THE BACK OF CURB AND THE EDGE OF SIDEWALK AND SHALL BE CENTERED BETWEEN THE BACK OF CURB AND THE EDGE OF SIDEWALK.
5). WHEN PLANTING TREES ALONG SIDEWALKS, THE TREE SHALL BE LIMBED TO 7' (2100) FOR PEDESTRIAN CLEARANCE.

TREE PLANTING DETAIL

DELAWARE DEPARTMENT OF TRANSPORTATION	PLANTING DETAILS		APPROVED CHIEF ENGINEER — DATE 10/10/06
	STANDARD NO. L-1 (2006)	SHT. 2 OF 3	RECOMMENDED DESIGN ENGINEER — DATE 10/3/06

08/04/2006

SCALE : N.T.S.

NOTE:
1). SEE PLANT LIST FOR SPACING (X).

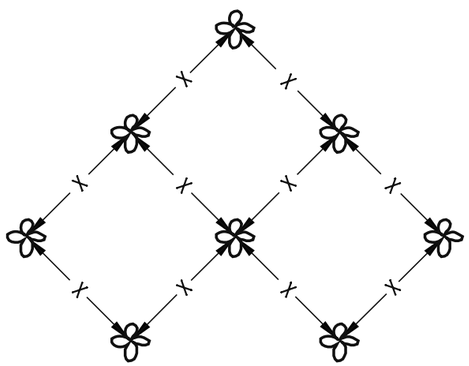

PLAN VIEW

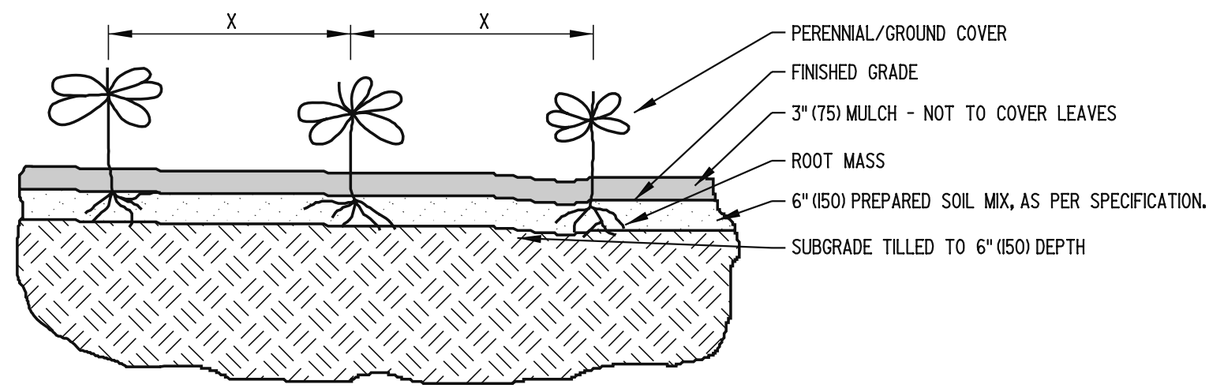

SECTION VIEW

PERENNIAL/GROUNDCOVER PLANTING DETAIL

DELAWARE DEPARTMENT OF TRANSPORTATION	PLANTING DETAILS		APPROVED CHIEF ENGINEER DATE 10/10/06
	STANDARD NO. L-1 (2006)	SHT. 3 OF 3	RECOMMENDED DESIGN ENGINEER DATE 10/3/06

06/27/2006

SCALE : N.T.S.

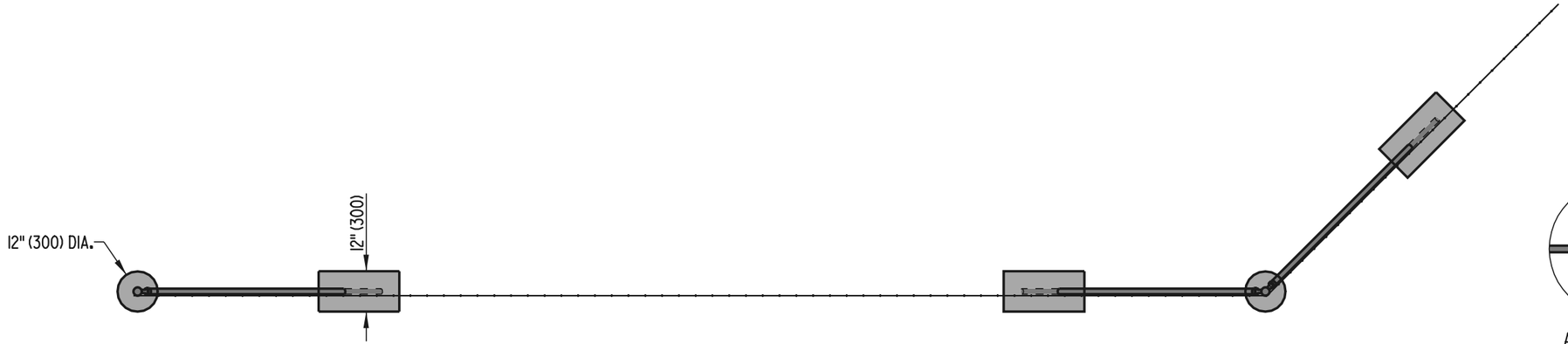

TOP VIEW

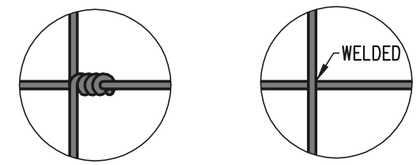

ALTERNATE METHODS OF SECURING VERTICAL STAY WIRES TO THE HORIZONTAL WIRES OF THE FABRIC.

DEATAIL 'A'

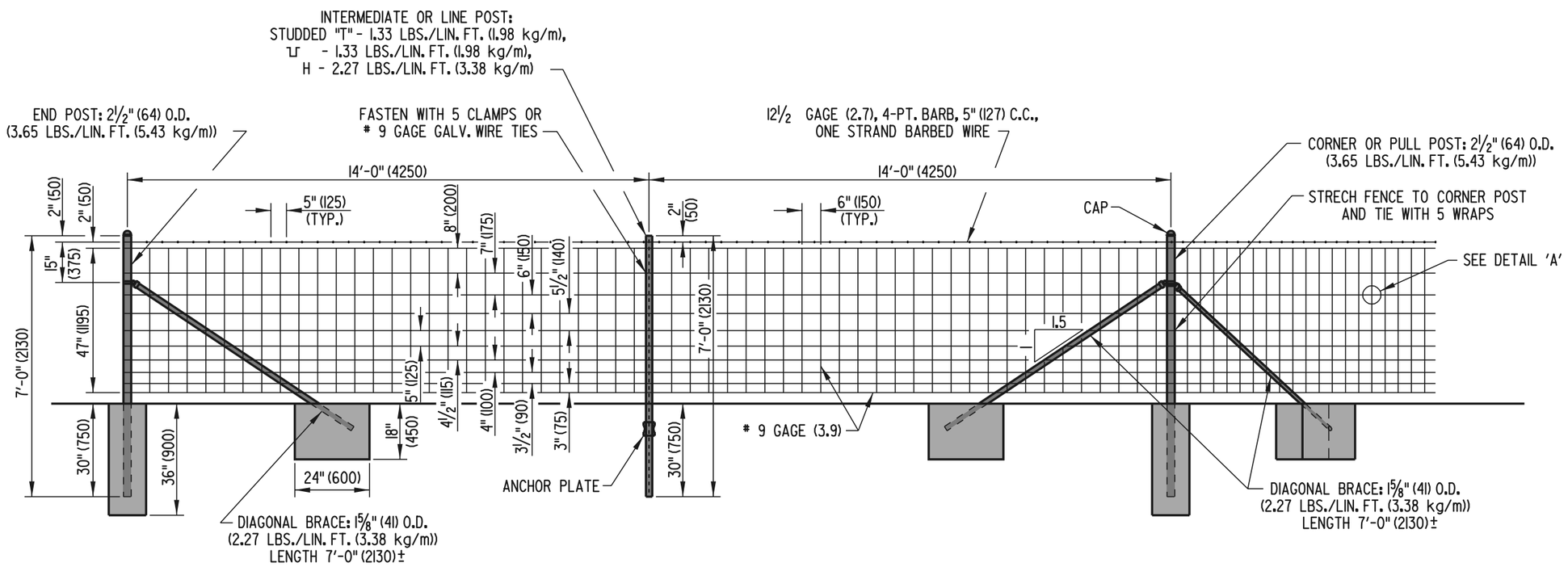

FRONT VIEW

DELAWARE DEPARTMENT OF TRANSPORTATION	RIGHT-OF-WAY FENCE		APPROVED [signature] CHIEF ENGINEER 6/18/01 DATE
	STANDARD NO. M-1 (2001)	SHT. 1 OF 1	RECOMMENDED [signature] DESIGN ENGINEER 6/18/01 DATE

05/21/2001

SCALE : N.T.S.

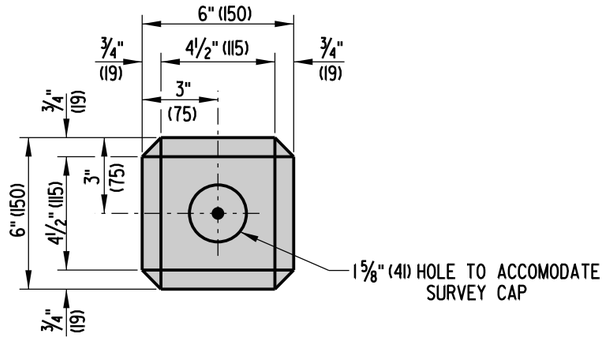

TOP

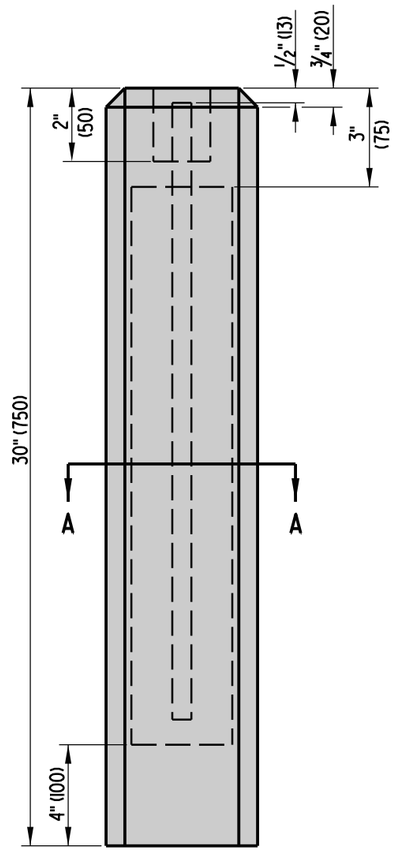

ELEVATION

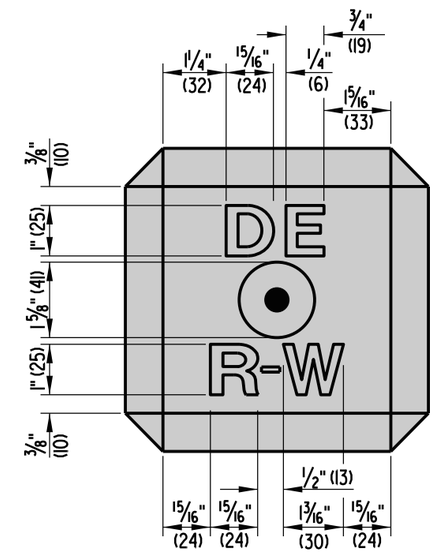

TOP DETAIL

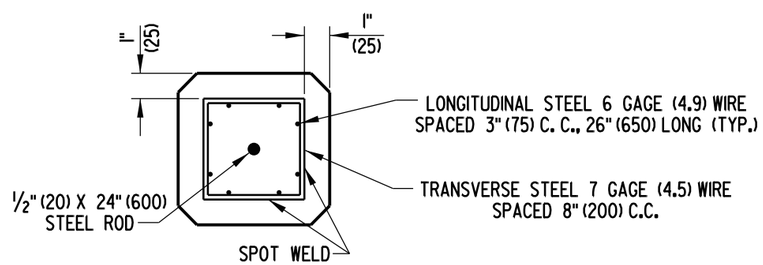

SECTION A-A

NOTES : 1. LONGITUDINAL STEEL SHALL BE HELD IN PLACE BY CRADLES.
2. LETTERS TO BE COUNTERSUNK IN TOP OF MARKER 1/4" (6).

DELAWARE DEPARTMENT OF TRANSPORTATION	CONCRETE MONUMENT		APPROVED CHIEF ENGINEER DATE 11/18/08
	STANDARD NO. M-2 (2008)	SHT. 1 OF 1	RECOMMENDED DESIGN ENGINEER DATE 11/17/08

07/28/2008

SCALE : N.T.S.

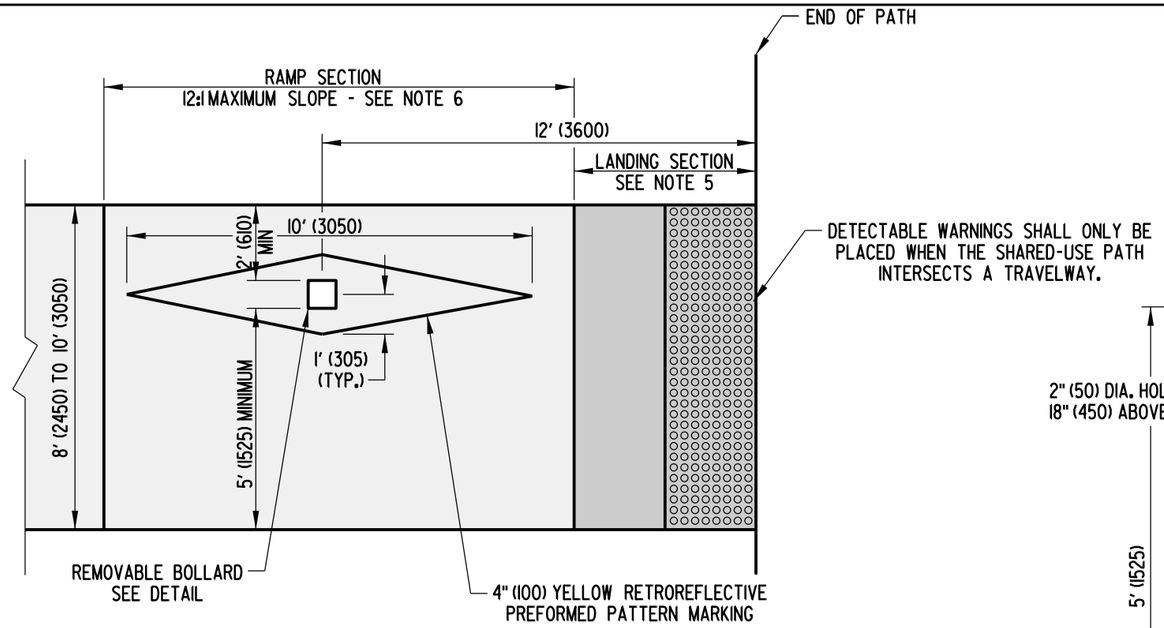

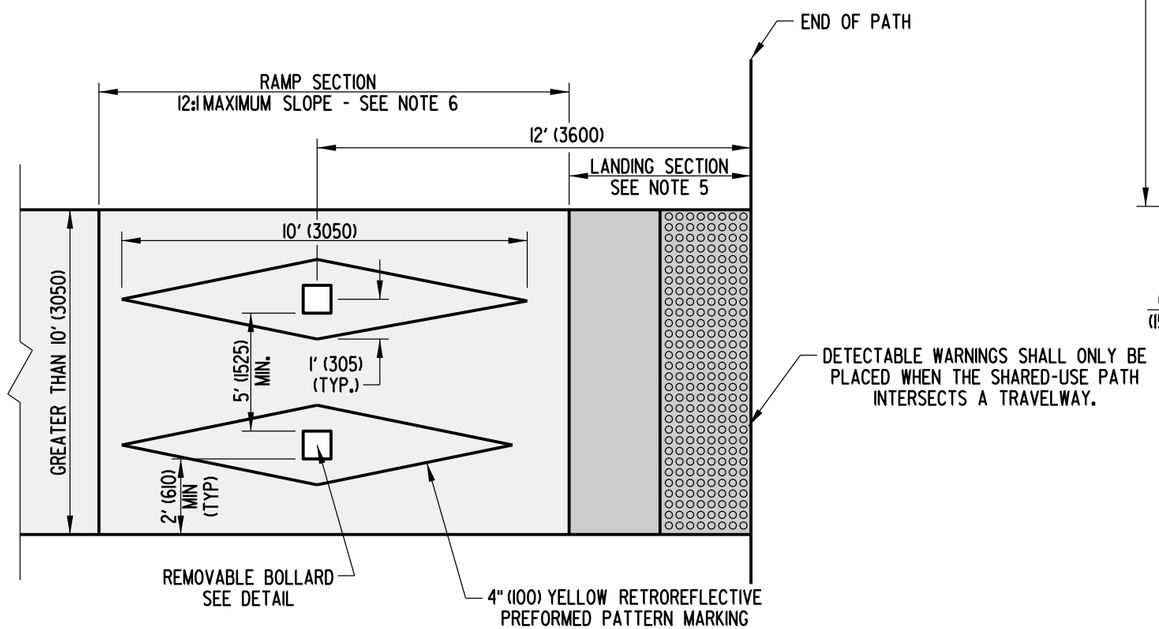

SHARED USE PATH INTERSECTION

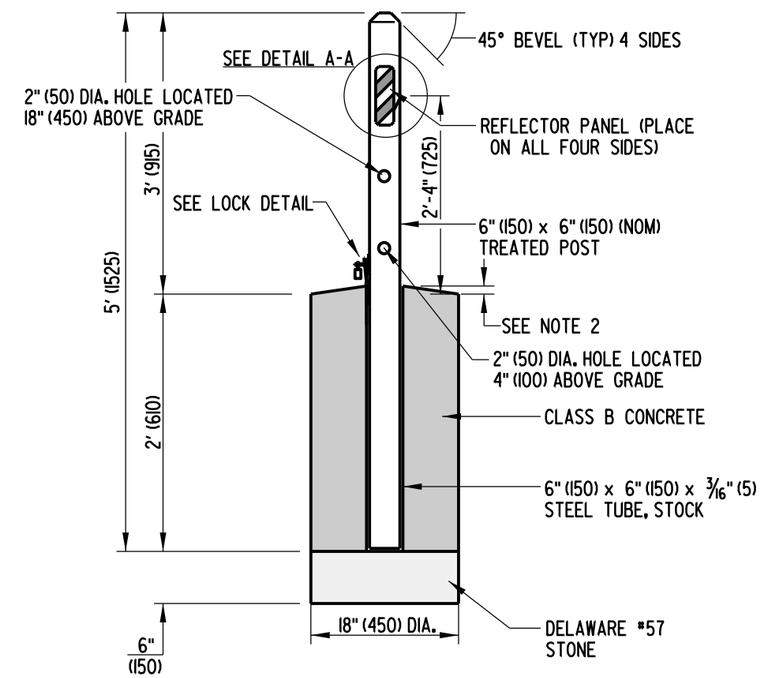

REMOVABLE BOLLARD

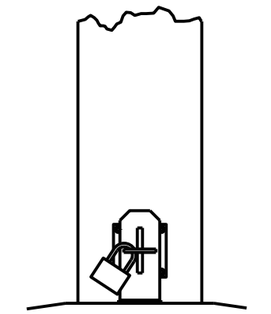

LOCK & HASP DETAIL FRONT VIEW

LOWER PORTION OF HASP SHALL BE WELDED TO STEEL TUBE.

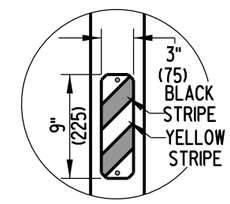

DETAIL A-A

NOTES:

1). IF THE SHARED USE PATH ENDS AT A ROADWAY OR RAILROAD CROSSING, THEN DETECTABLE WARNING TRUNCATED DOMES 24" (600) LONG AND THE FULL WIDTH OF THE PATH SHALL BE INSTALLED. SEE DETAIL C-2.
2). STEEL TUBE TO EXTEND 1/2" (13) ABOVE GROUND WITH CONCRETE TO SLOPE AWAY FROM TUBE TO KEEP WATER AND SEDIMENT FROM DRAINING INTO TUBE.
3). BOLLARDS ARE NOT REQUIRED FOR A SHARED-USE PATH LESS THAN 8' (2450) WIDE.
4). SHAVE THE POST AS NECESSARY SO THAT IT WILL FIT IN THE STEEL TUBE.
5). THE LANDING SECTION SHALL BE A MINIMUM OF 5' (1525) IN LENGTH AND SHALL HAVE A MAXIMUM CROSS SLOPE AND RUNNING SLOPE OF 2%. THE ENTIRE LANDING SECTION MUST ALSO BE CONCRETE.
6). THE RAMP SECTION SHALL HAVE A MAXIMUM CROSS SLOPE OF 2%. IT SHALL ALSO HAVE A MAXIMUM RUNNING SLOPE OF 12:1. HOWEVER, IF A 12:1 RUNNING SLOPE DOES NOT ALLOW THE RAMP MEET EXISTING GRADE WITHIN 15' (4200), THE RUNNING SLOPE MAY EXCEED 12:1.

DELAWARE DEPARTMENT OF TRANSPORTATION	BOLLARD & SHARED-USE PATH DETAILS		APPROVED CHIEF ENGINEER — DATE 11/18/08
	STANDARD NO. M-3 (2008)	SHT. 1 OF 1	RECOMMENDED DESIGN ENGINEER — DATE 11/17/08

11/14/2008

SCALE : N.T.S.

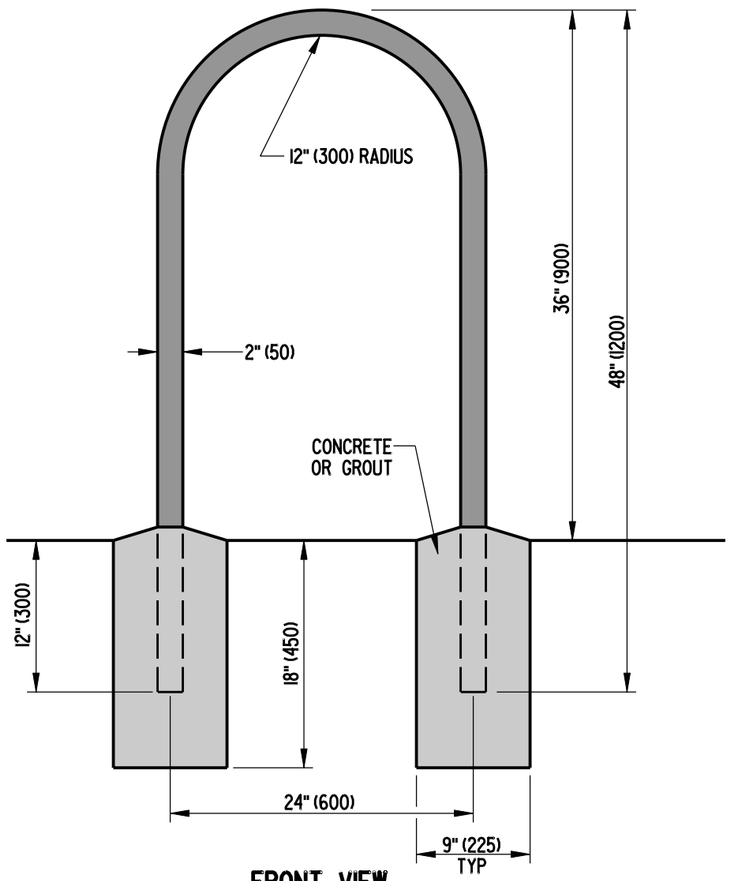

FRONT VIEW

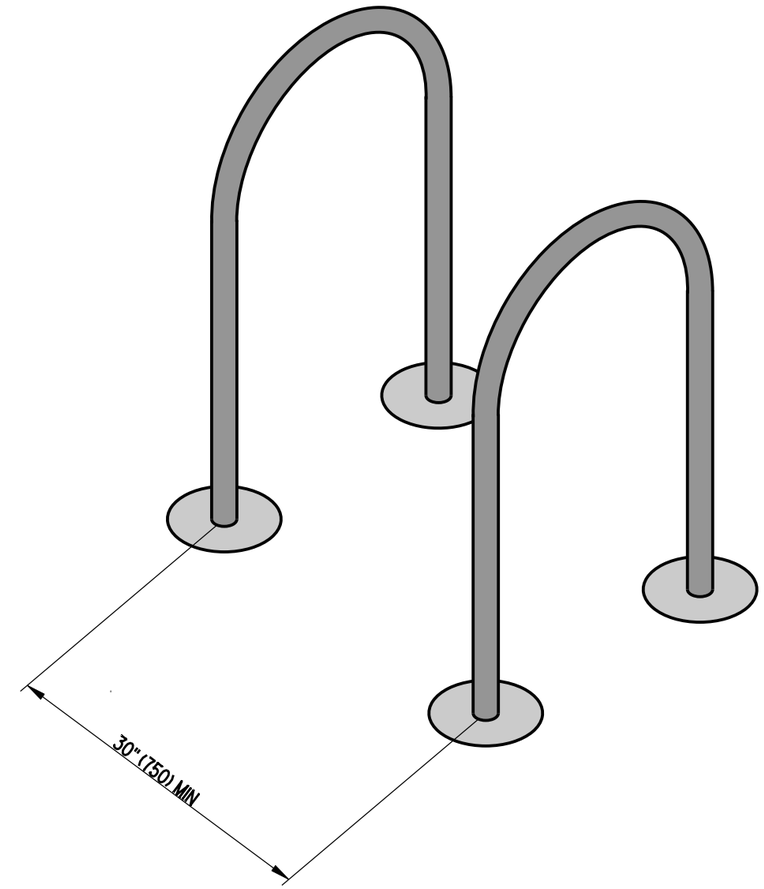

ISOMETRIC VIEW
4 BIKE INSTALLATION

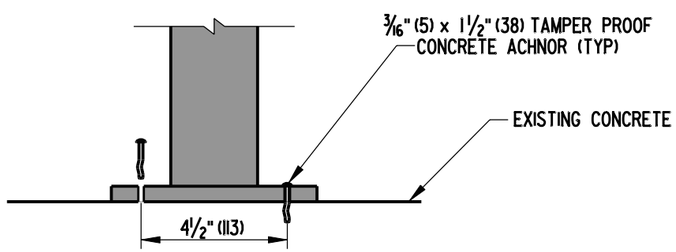

ALTERNATE ANCHOR OPTION
SECTION VIEW

DELAWARE DEPARTMENT OF TRANSPORTATION	BIKE RACK DETAILS		APPROVED CHIEF ENGINEER — DATE 10/24/07
	STANDARD NO. M-4 (2007)	SHT. 1 OF 1	RECOMMENDED DESIGN ENGINEER — DATE 10/23/07

04/03/2007

SCALE : N.T.S.

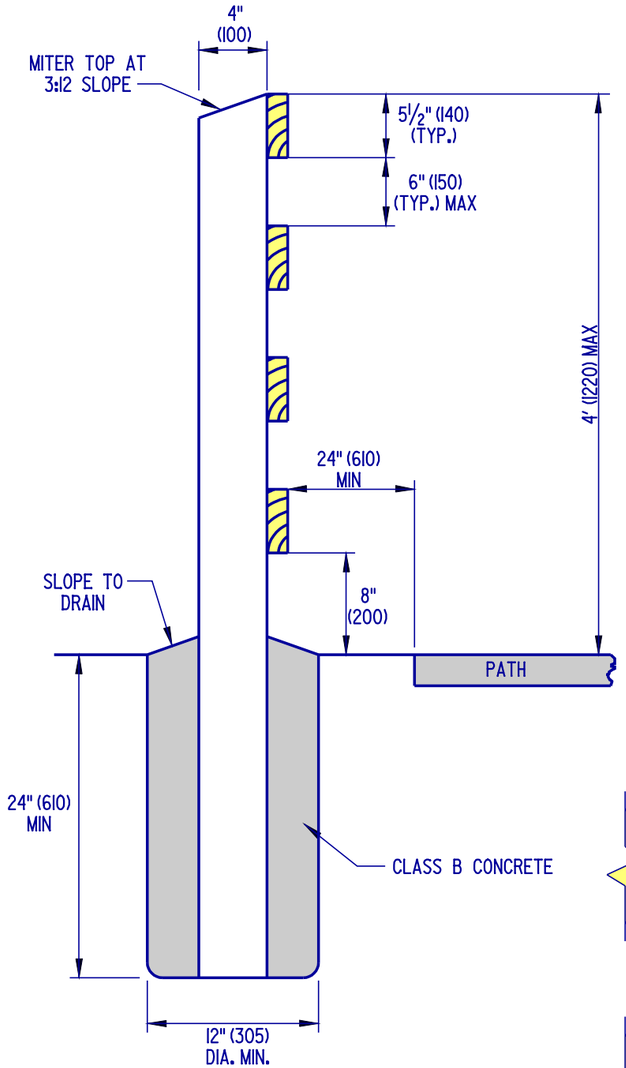

SECTION A-A

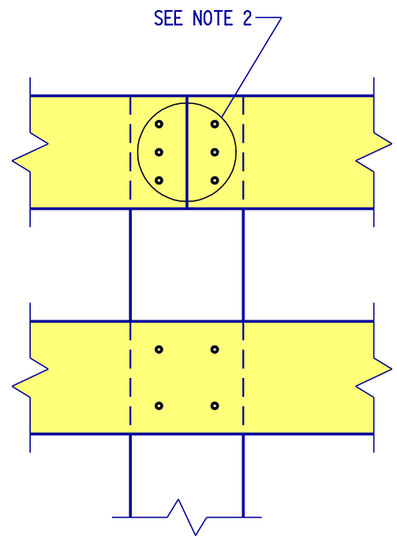

TYPICAL JOINT DETAIL

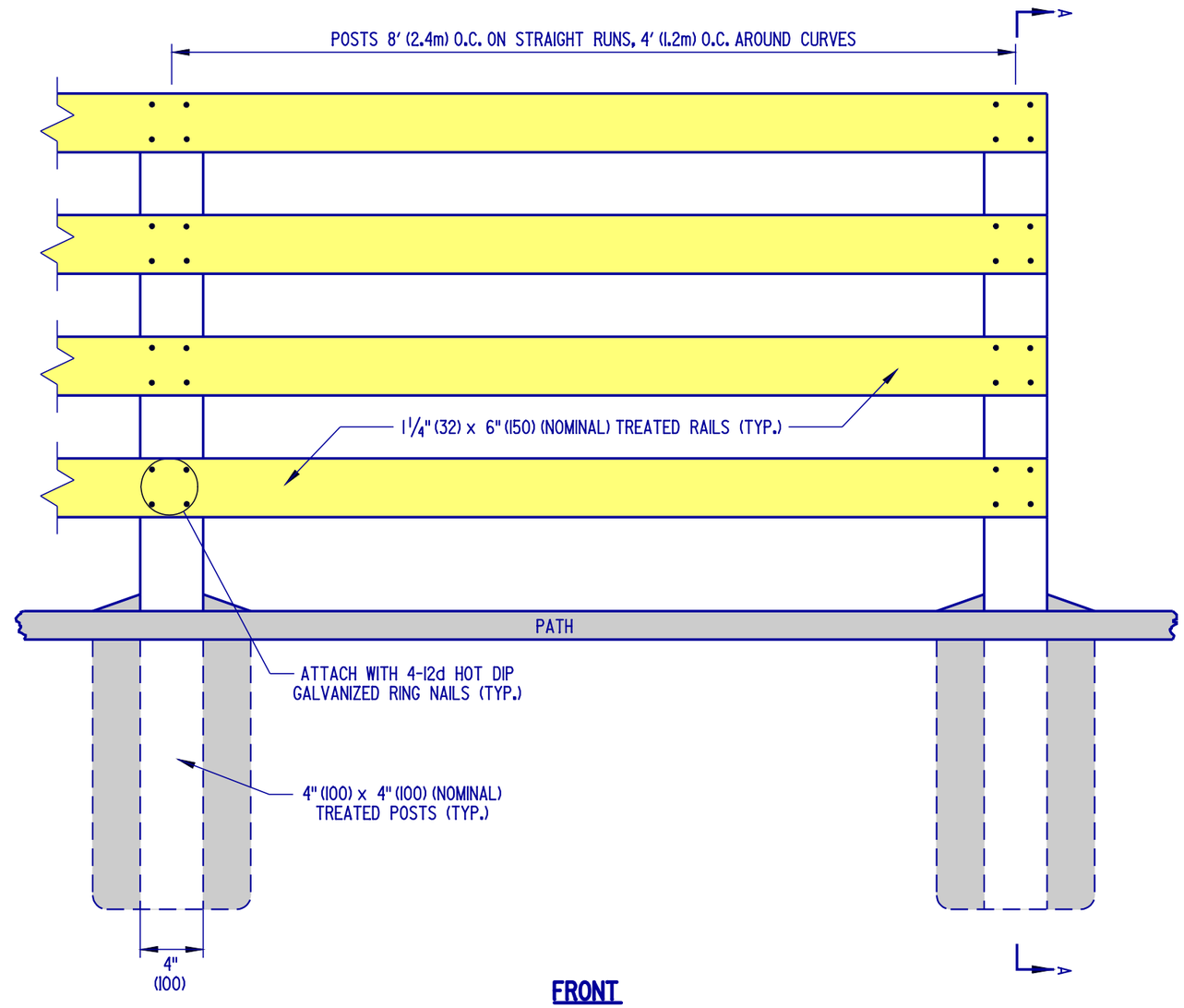

FRONT

NOTES:
1. ALL RAIL JOINTS SHALL BE CENTERED AT THE POSTS.
2. ALL JOINTS SHALL BE ATTACHED WITH 3 - 12d NAILS AND TWO ADJACENT RAILS SHALL NOT END ON THE SAME POST.
3. RAILS SHALL BE FLUSH TO THE POSTS AT THE END POSTS.

DELAWARE DEPARTMENT OF TRANSPORTATION	WOOD RAIL FENCE DETAILS		APPROVED ____ CHIEF ENGINEER ____ DATE
	STANDARD NO. M-5 (2004)	SHT. 1 OF 1	RECOMMENDED ____ DESIGN ENGINEER ____ DATE

09/27/2004

SCALE : N.T.S.

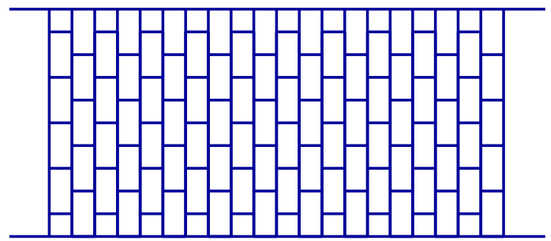

4" (100) x 8" (200) RUNNING BOND PATTERN

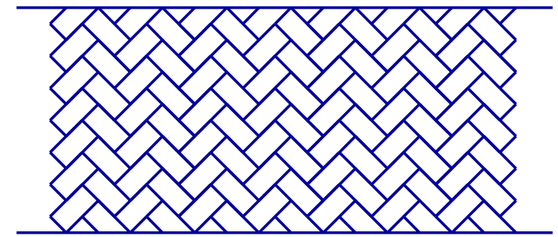

4" (100) x 8" (200) HERRINGBONE PATTERN

NOTES:

1. ACTUAL PATTERN TO BE USED SHALL BE SPECIFIED ON THE PLANS. COLOR IS TO BE "BRICK RED" UNLESS OTHERWISE NOTED ON THE PLANS.
2. MATERIALS AND PAVEMENT BOX VARY DEPENDING ON PLANS.
3. FOR CROSSWALK APPLICATIONS, 8" (200) WHITE LINES SHOULD BE PLACED ON BOTH SIDES.
4. THE PATTERNS ABOVE ARE THE PREFERRED PATTERNS AVAILABLE FOR SIDEWALK OR CROSSWALK APPLCATIONS.

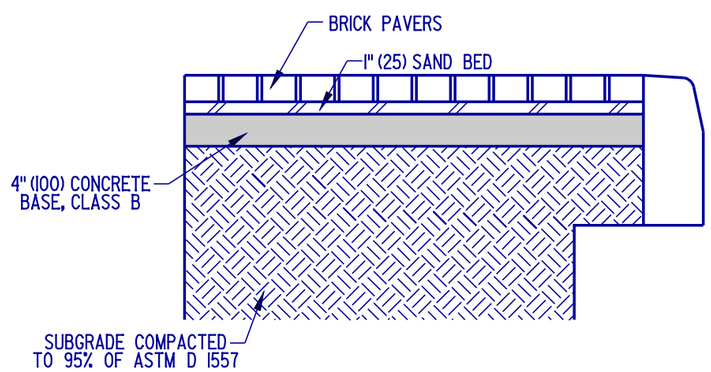

BRICK PAVER SIDEWALK DETAIL

NOTES:

1. ALL PAVERS ARE TO BE "BRICK RED" UNLESS OTHERWISE SPECIFIED ON THE PLANS. THE PATTERN SHALL BE SPECIFIED ON THE PLANS.
2. EXPANSION JOINT MAY BE NEEDED ON NON-CURB SIDE OF BRICK PAVER SIDEWALK IF THAT SIDE IS AGAINST BUILDING OR OTHER CONFINING FEATURE.

DELAWARE DEPARTMENT OF TRANSPORTATION	PATTERNED HOT-MIX OR CONCRETE & BRICK PAVER DETAILS	APPROVED ____ CHIEF ENGINEER ____ DATE
	STANDARD NO. M-6 (2004) SHT. 1 OF 1	RECOMMENDED ____ DESIGN ENGINEER ____ DATE

09/24/2004

SCALE : N.T.S.

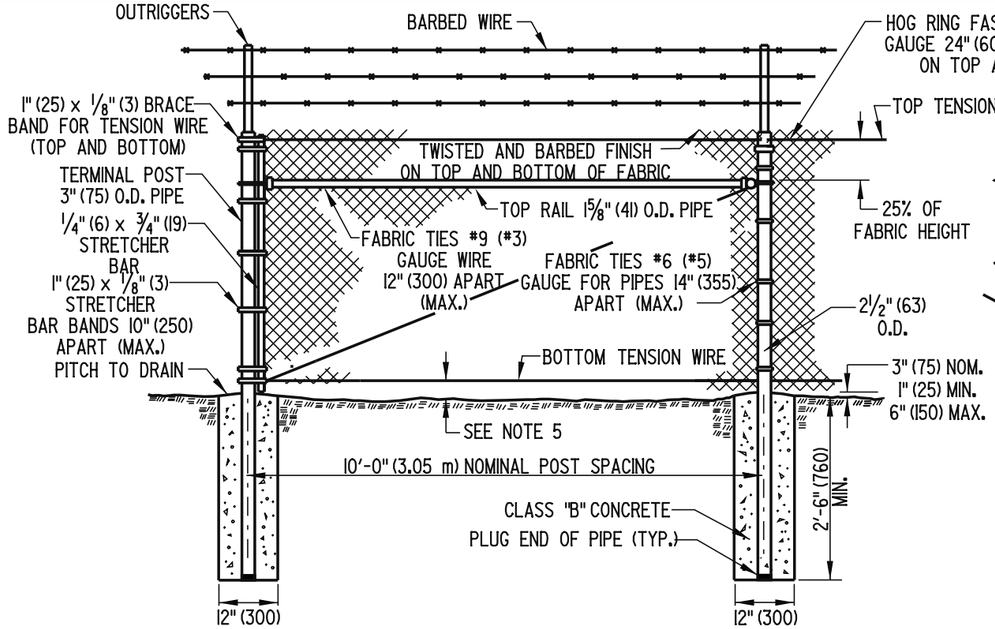

CHAIN-LINK FENCE

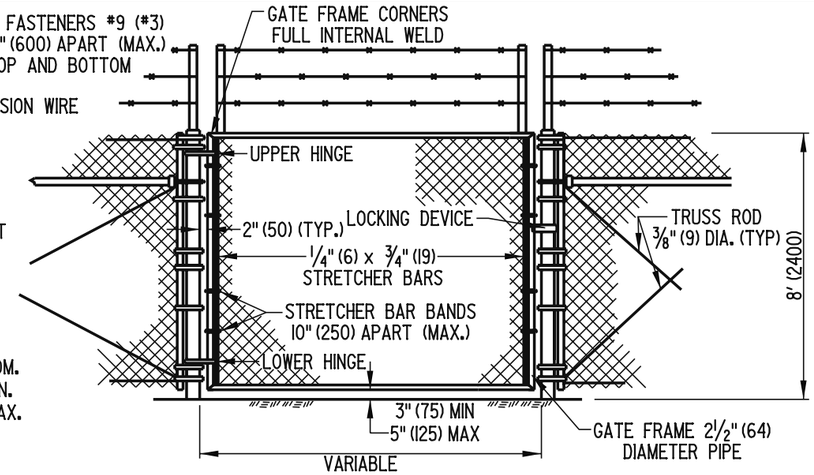

GATES, CHAIN-LINK FENCE

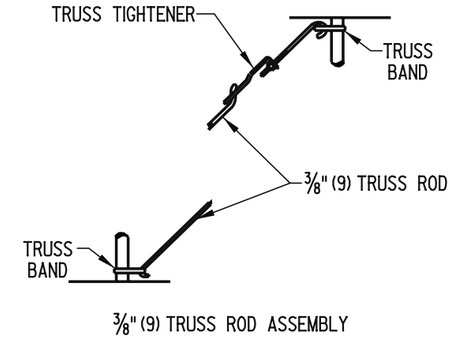

CHAIN-LINK FENCE ASSEMBLIES

TENSION WIRE CONNECTION AT ROUND INTERMEDIATE OR CORNER POST

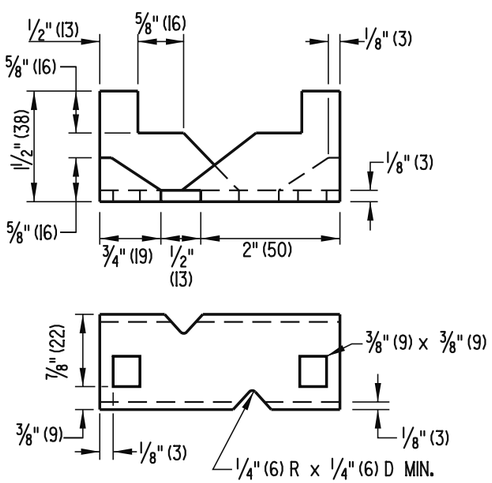

ANCHOR SHOE

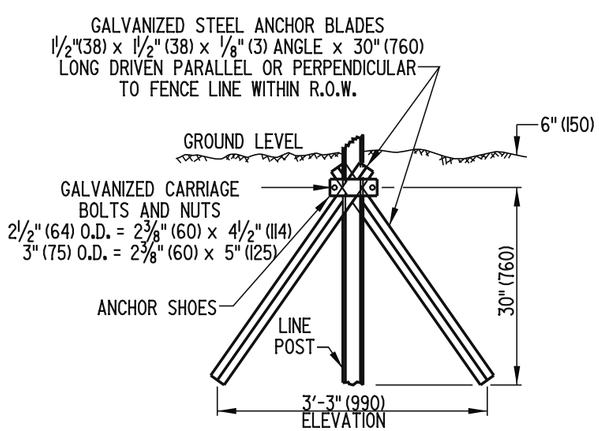

DRIVE ANCHOR SHOE ASSEMBLY

(SEE NOTE 4)

GENERAL NOTES

1). POSTS

	TERMINAL, CORNER AND GATE POSTS	LINE POSTS	TOP OR BRACE RAIL
	3" (75) O.D. PIPE	2 1/2" (64) O.D. PIPE	1 5/8" (41) O.D. PIPE
AASHTO TYPE	1 OR 11	1 OR 11	1 OR 11
AASHTO GRADE	1 OR 2	1 OR 2	1 OR 2
MINIMUM LENGTH OF POST:	10'-8" (3250)	10'-8" (3250)	N/A
ACTUAL OUTSIDE DIAMETER	2 7/8" (73)	2 3/8" (60)	1.660" (42)
WALL THICKNESS	GRADE 1 = .203" (5.2) GRADE 2 = .160" (4)	GRADE 1 = .154" (3.9) GRADE 2 = .120" (3)	GRADE 1 = .140" (3.5) GRADE 2 = .111" (2.8)

2). THE DEPTH OF CONCRETE FOOTERS IN SOLID ROCK MAY BE REDUCED TO 12" (300) BELOW THE TOP OF ROCK AND THE DIAMETER OF THE HOLE IN ROCK MAY BE REDUCED TO 6" (150).
3). BRACE BANDS AND STRETCHER BAR BANDS SHALL BE FURNISHED WITH 5/16" (8) DIA. CARRIAGE BOLTS AND ELASTIC STOP NUTS.
4). DRIVE ANCHOR SHOE ASSEMBLY ONLY TO BE USED IN WET AREAS AND WITH PRIOR APPROVAL OF THE ENGINEER.
5). THE BOTTOM OF THE FENCE SHALL BE 2" (50) MAX ABOVE HARD GROUND OR PAVEMENT. WHERE THERE IS SOFT GROUND, THE BOTTOM OF THE FENCE SHALL EXTEND INTO THE GROUND IN ORDER TO BE FIRM DUE TO SHIFTING SOIL OR SAND.
6). NUTS AND BOLTS SHALL BE TACK WELDED OR BURRED TO PREVENT REMOVAL.
7). IF THERE ARE ANY OPENINGS IN THE FENCE LARGER THAN 96 SQ. IN. (620 sq. cm) DUE TO UTILITIES OR GRADED TERRAIN, THE OPENINGS SHALL BE SECURED WITH A METAL GRILL THAT IS LOCKED OR PERMANENTLY WELDED.
8). VEGETATION AND PERMANENT STRUCTURES (SUCH AS BUILDINGS, LIGHT POLES, AND UTILITY POLES) SHALL BE AT LEAST 14' (4.2 m) FROM THE FENCE. ANY EXCEPTIONS SHALL REQUIRE THE CONSTRUCTION OF TOP GUARDS.

DELAWARE DEPARTMENT OF TRANSPORTATION	CHAIN LINK FENCE DETAILS	APPROVED CHIEF ENGINEER	DATE 10/10/06
	STANDARD NO. M-7 (2006) SHT. 1 OF 1	RECOMMENDED DESIGN ENGINEER	DATE 10/9/06

06/27/2006

SCALE : N.T.S.

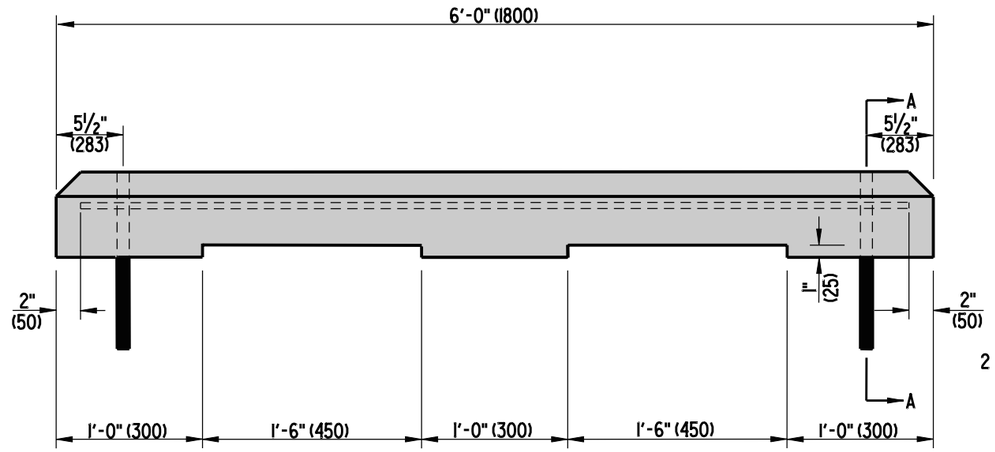

ELEVATION

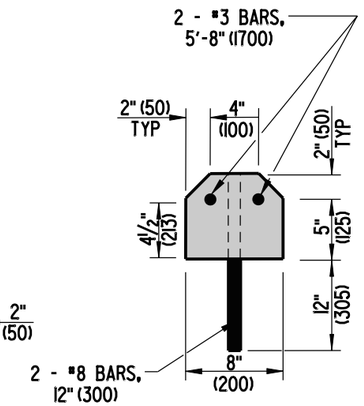

SECTION A-A

DELAWARE DEPARTMENT OF TRANSPORTATION	P.C.C. PARKING BUMPER		APPROVED CHIEF ENGINEER 10/24/07 DATE
	STANDARD NO. M-8 (2007)	SHT. 1 OF 1	RECOMMENDED DESIGN ENGINEER 10/23/07 DATE

08/01/2007

SCALE : N.T.S.

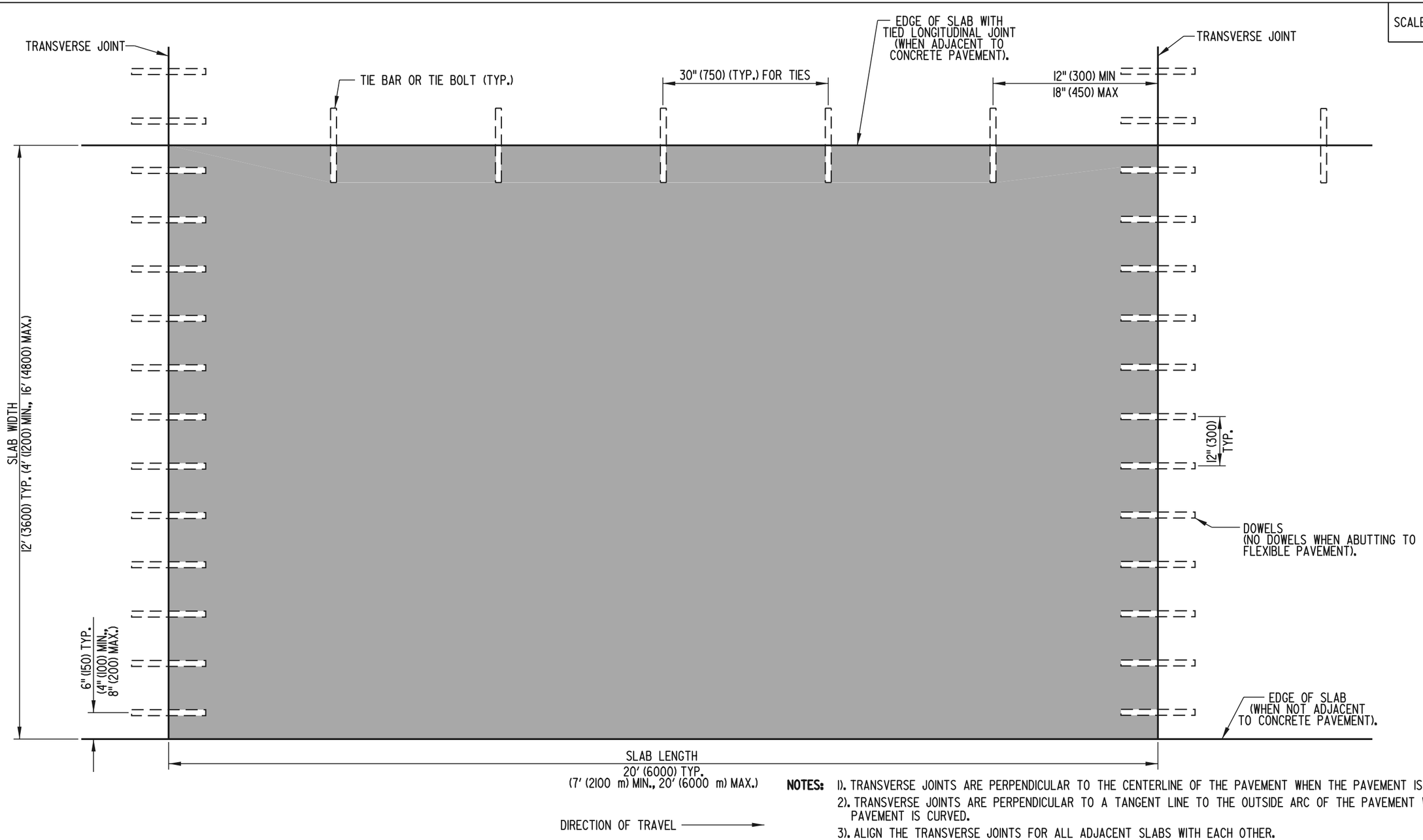

NOTES:

1). TRANSVERSE JOINTS ARE PERPENDICULAR TO THE CENTERLINE OF THE PAVEMENT WHEN THE PAVEMENT IS STRAIGHT.

2). TRANSVERSE JOINTS ARE PERPENDICULAR TO A TANGENT LINE TO THE OUTSIDE ARC OF THE PAVEMENT WHEN THE PAVEMENT IS CURVED.

3). ALIGN THE TRANSVERSE JOINTS FOR ALL ADJACENT SLABS WITH EACH OTHER.

4). ABRUPT CHANGES IN PAVEMENT WIDTH MAY OCCUR ONLY AT THE TRANSVERSE JOINT LINE; LONGITUDINAL JOINTS SHALL BE CONTINUOUS WHENEVER POSSIBLE.

5). LONGITUDINAL JOINTS SHOULD NOT BE LOCATED WITHIN PROPOSED WHEEL PATHS. THE WHEEL PATH IS GENERALLY LOCATED 2' (600) INSIDE OF THE LANE EDGELINE OR CENTERLINE.

SLAB PLAN (WITH DOWEL AND TIE LOCATIONS)

DELAWARE DEPARTMENT OF TRANSPORTATION	P.C.C. PAVEMENT		APPROVED [signature] CHIEF ENGINEER 6/18/01 DATE
	STANDARD NO. P-1 (2001)	SHT. 1 OF 5	RECOMMENDED [signature] DESIGN ENGINEER 6/15/01 DATE

04/18/2001

SCALE : N.T.S.

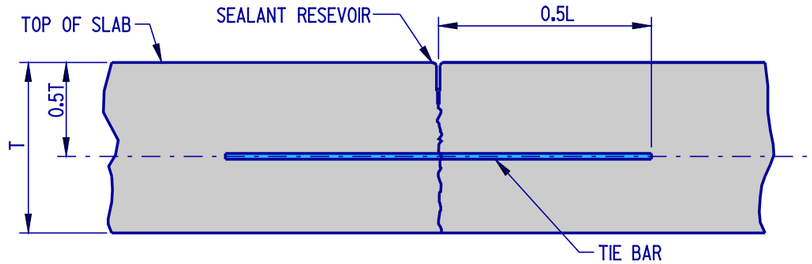

LONGITUDINAL SAW-CUT JOINT DETAIL

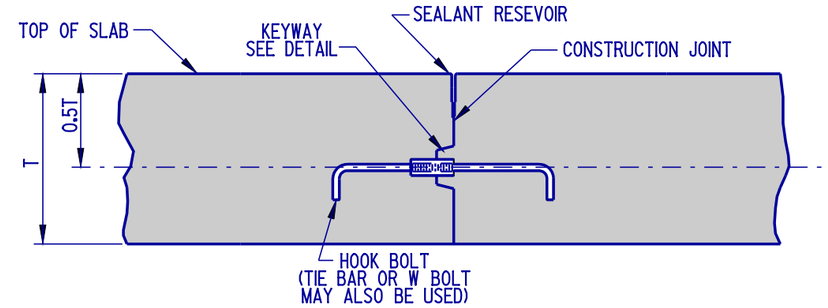

LONGITUDINAL CONSTRUCTION JOINT DETAIL

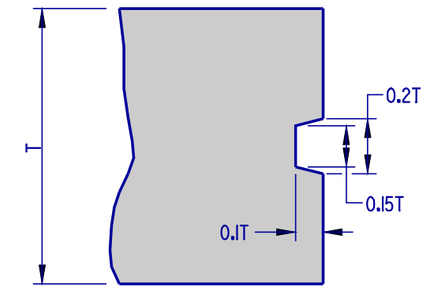

KEYWAY DETAIL

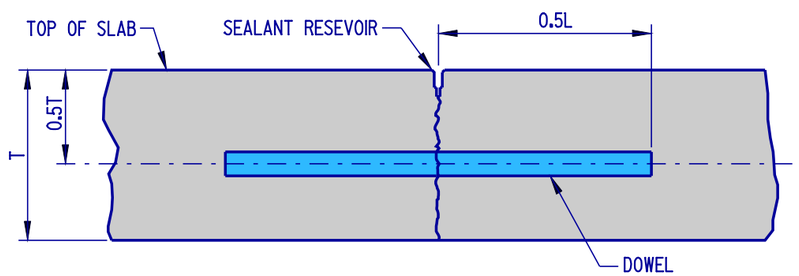

TRANSVERSE SAW-CUT JOINT DETAIL

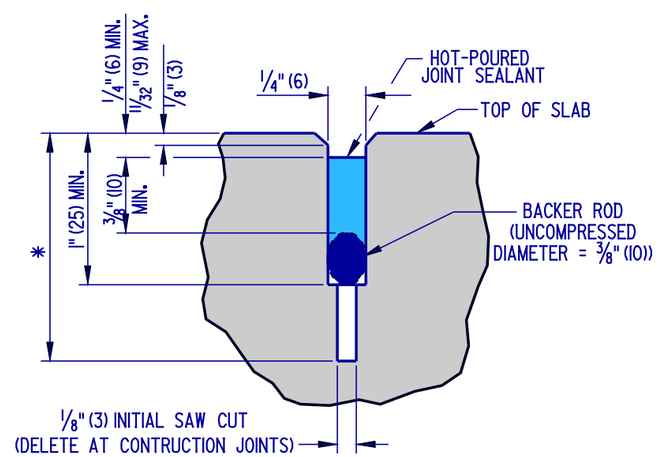

SEALANT DETAIL- LONGITUDINAL JOINT

* - 0.3T (10" (250) P.C.C. PAVEMENT)
0.4T (12" (300) P.C.C. PAVEMENT)

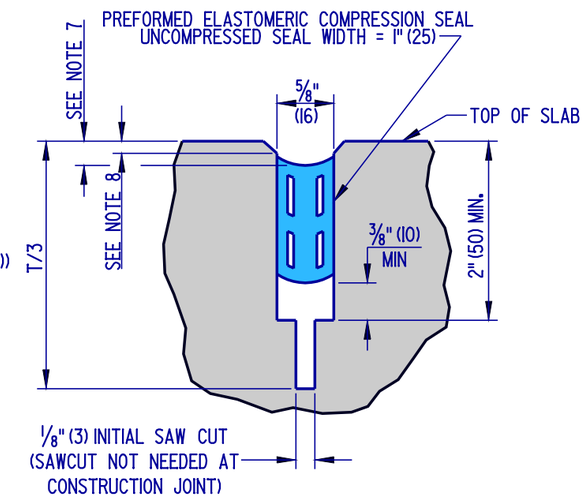

SEALANT DETAIL- TRANSVERSE JOINT

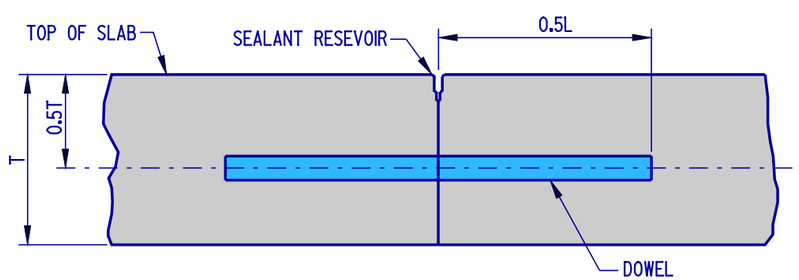

TRANSVERSE CONSTRUCTION JOINT DETAIL

NOTES:

1). AS DIMENSIONED, THE WIDTH OF THE TRANSVERSE SEALANT RESERVOIR IS APPLICABLE WHEN THE TEMPERATURE OF THE PAVEMENT SURFACE IS BETWEEN 60°F (16°C) AND 80°F (27°C). WHEN THE TEMPERATURE IS BELOW 60°F (16°C), THE SEALANT RESERVOIR SHALL BE CUT 1/16" (2) WIDER. WHEN THE TEMPERATURE IS ABOVE 80°F (27°C), THE SEALANT RESERVOIR SHALL BE CUT 1/16" (2) NARROWER.
2). "T" REFERS TO THE ACTUAL CONSTRUCTED SLAB THICKNESS.
3). TOLERANCE ON ALL JOINT SEALANT DETAIL DIMENSIONS SHOWN WITHOUT RANGES SHALL BE PLUS 1/16" (2), MINUS 0" (0).
4). THE TOP EDGES OF THE CONTACT SURFACES OF THE SEALANT MATERIAL ON BOTH SIDES OF THE JOINT RESERVOIR SHALL BE AT THE SAME ELEVATION.
5). TRANSVERSE JOINT MATERIAL SHALL BE PLACED BEFORE LONGITUDINAL JOINT MATERIAL; THE TRANSVERSE JOINT MATERIAL SHALL BE CONTINUOUS FOR THE FULL WIDTH OF ALL ADJACENT P.C.C. PAVEMENT SLABS.
6). LONGITUDINAL JOINT MATERIAL SHALL BE PLACED WITHOUT GAPS WHENEVER INTERRUPTED BY THE TRANSVERSE JOINT MATERIAL.
7). TRANSVERSE JOINT SEAL TO BE RECESSED 3/16" (5) TO 5/16" (8) BELOW THE TOP OF THE SLAB.
8). A 45° CHAMFER SHALL BE CUT 1/8" (3) TO 1/4" (6) DEEP AT THE TOP OF THE SLAB ALONG BOTH SIDES OF THE TRANSVERSE SEALANT RESERVOIR.
9). THE TOP EDGES OF THE COMPRESSION SEAL SHALL BE IN FULL CONTACT WITH THE SLAB SIDES.

JOINT AND SEALANT DETAILS

DELAWARE DEPARTMENT OF TRANSPORTATION	P.C.C. PAVEMENT		APPROVED ____ CHIEF ENGINEER ____ DATE
	STANDARD NO. P-1 (2004)	SHT. 2 OF 5	RECOMMENDED ____ DESIGN ENGINEER ____ DATE

10/01/2004

SCALE : N.T.S.

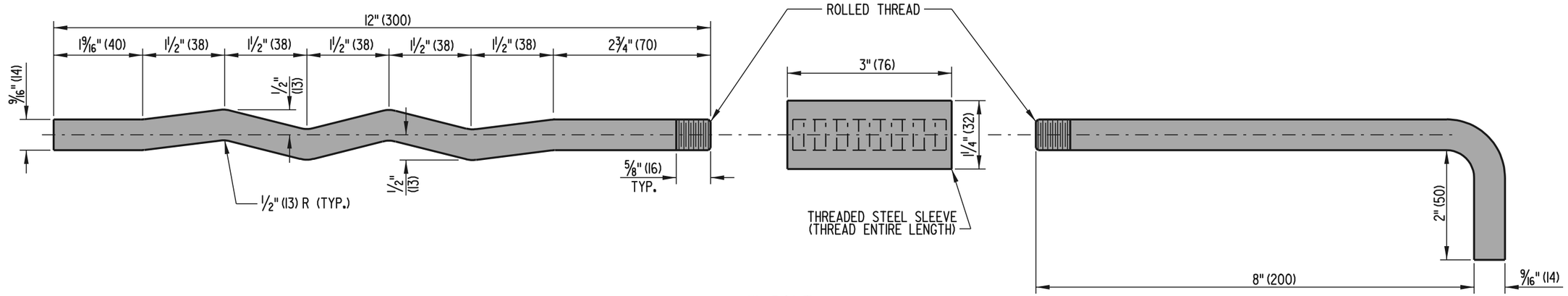

W BOLT

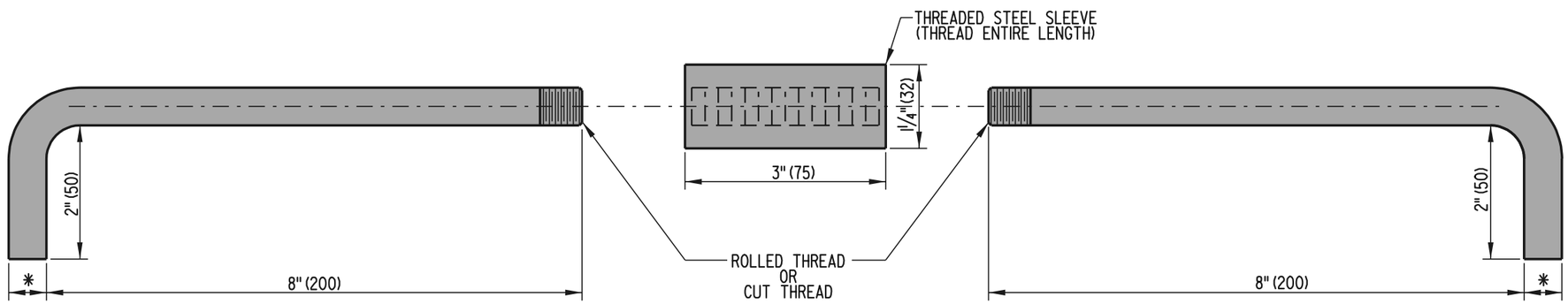

HOOK BOLT

* -11/16" (17) ROLLED THREADS
3/4" (19) CUT THREADS

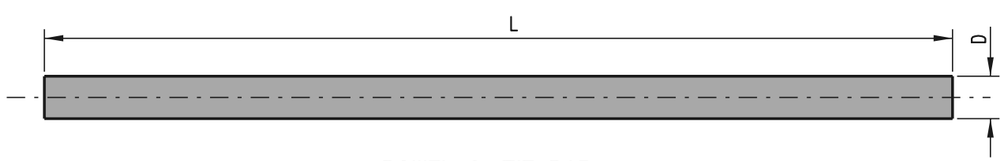

DOWEL & TIE BAR

DOWEL & TIE BAR CHART				
SLAB THICKNESS	DOWEL		TIE BAR	
	D	L	D	L
10" (250)	1 1/4" (32)	18" (450)	5/8" (16)	30" (750)
12" (300)	1 1/2" (38)	20" (500)	5/8" (16)	30" (750)

DELAWARE DEPARTMENT OF TRANSPORTATION	P.C.C. PAVEMENT		APPROVED [signature] CHIEF ENGINEER DATE 6/18/01
	STANDARD NO. P-1 (2001)	SHT. 3 OF 5	RECOMMENDED [signature] DESIGN ENGINEER DATE 6/15/01

05/22/2001

SCALE : N.T.S.

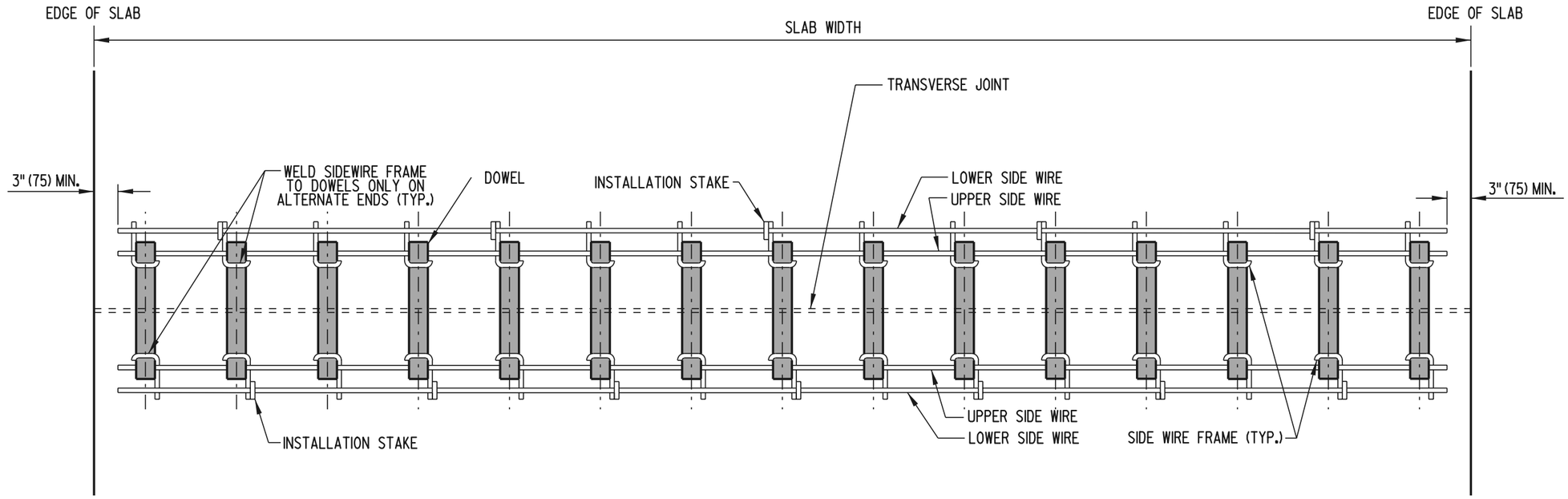

PLAN

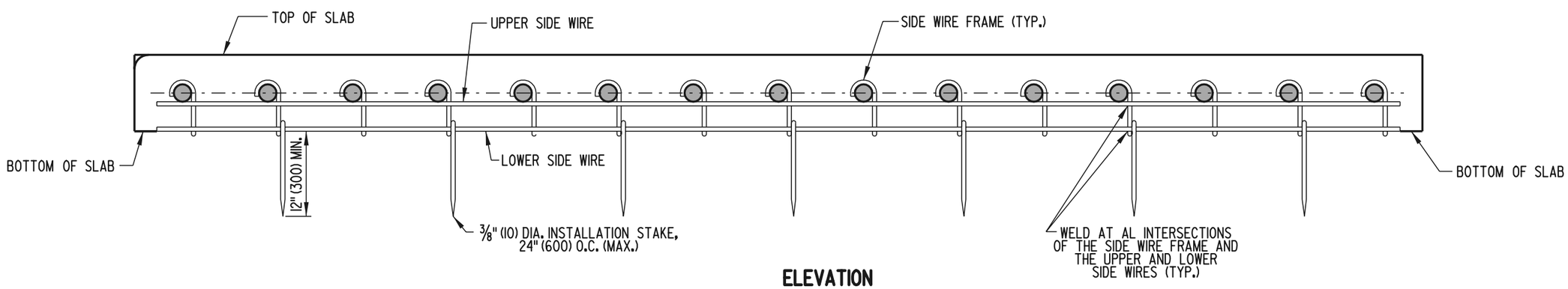

ELEVATION

DOWEL SUPPORT BASKET

DELAWARE DEPARTMENT OF TRANSPORTATION	P.C.C. PAVEMENT			APPROVED (CHIEF ENGINEER) 6/18/01 (DATE)
	STANDARD NO. P-1 (2001)	SHT. 4	OF 5	RECOMMENDED (DESIGN ENGINEER) 6/18/01 (DATE)

04/18/2001

SCALE : N.T.S.

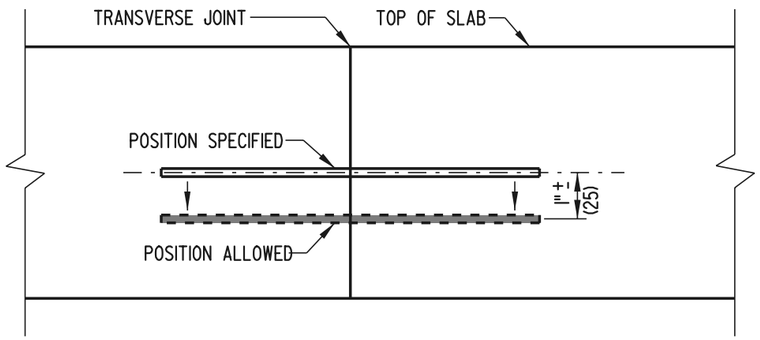

VERTICAL TRANSLATION

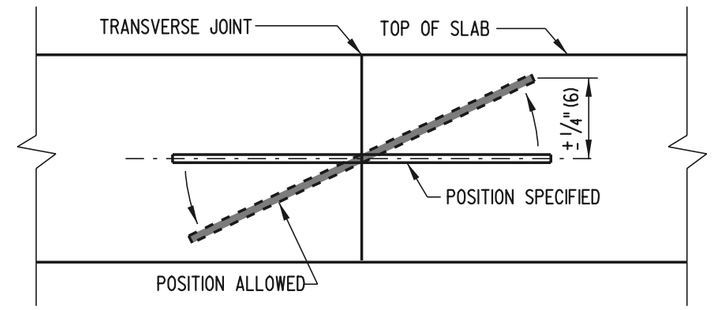

VERTICAL ROTATION

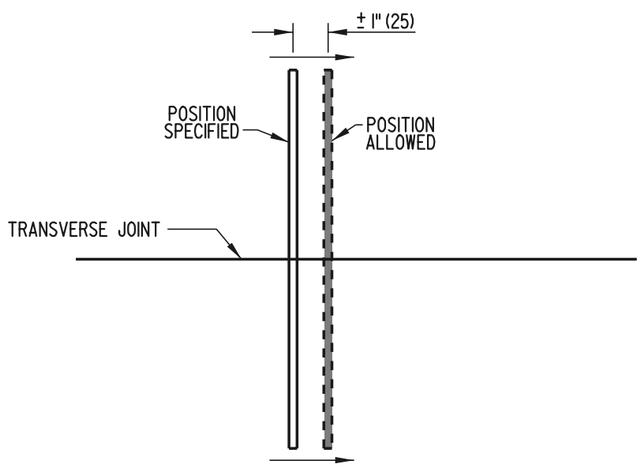

HORIZONTAL TRANSLATION

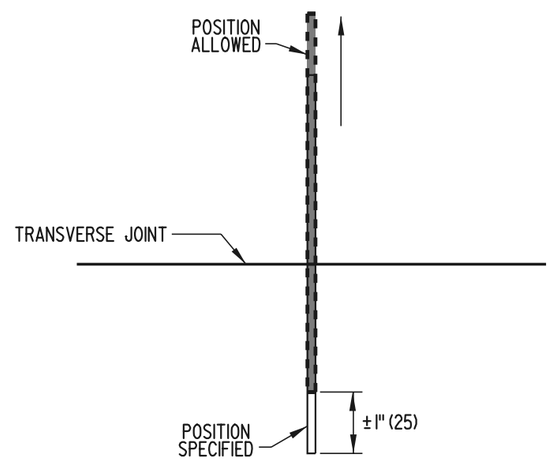

LONGITUDINAL TRANSLATION

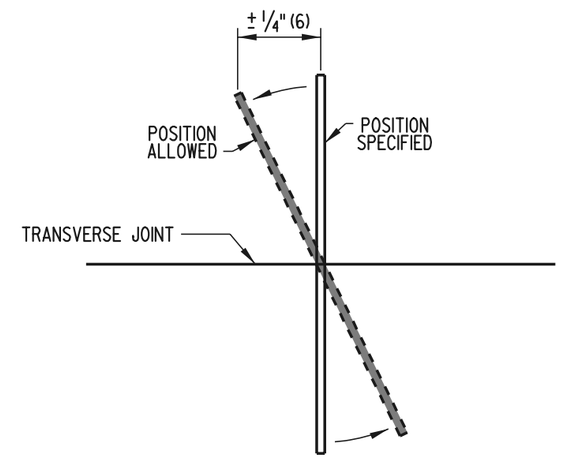

HORIZONTAL ROTATION

DOWEL & TIE BAR PLACEMENT TOLERANCES

DELAWARE DEPARTMENT OF TRANSPORTATION	P.C.C. PAVEMENT		APPROVED CHIEF ENGINEER DATE 6/18/01
	STANDARD NO. P-1 (2001)	SHT. 5 OF 5	RECOMMENDED DESIGN ENGINEER DATE 6/18/01

04/18/2001

SCALE : N.T.S.

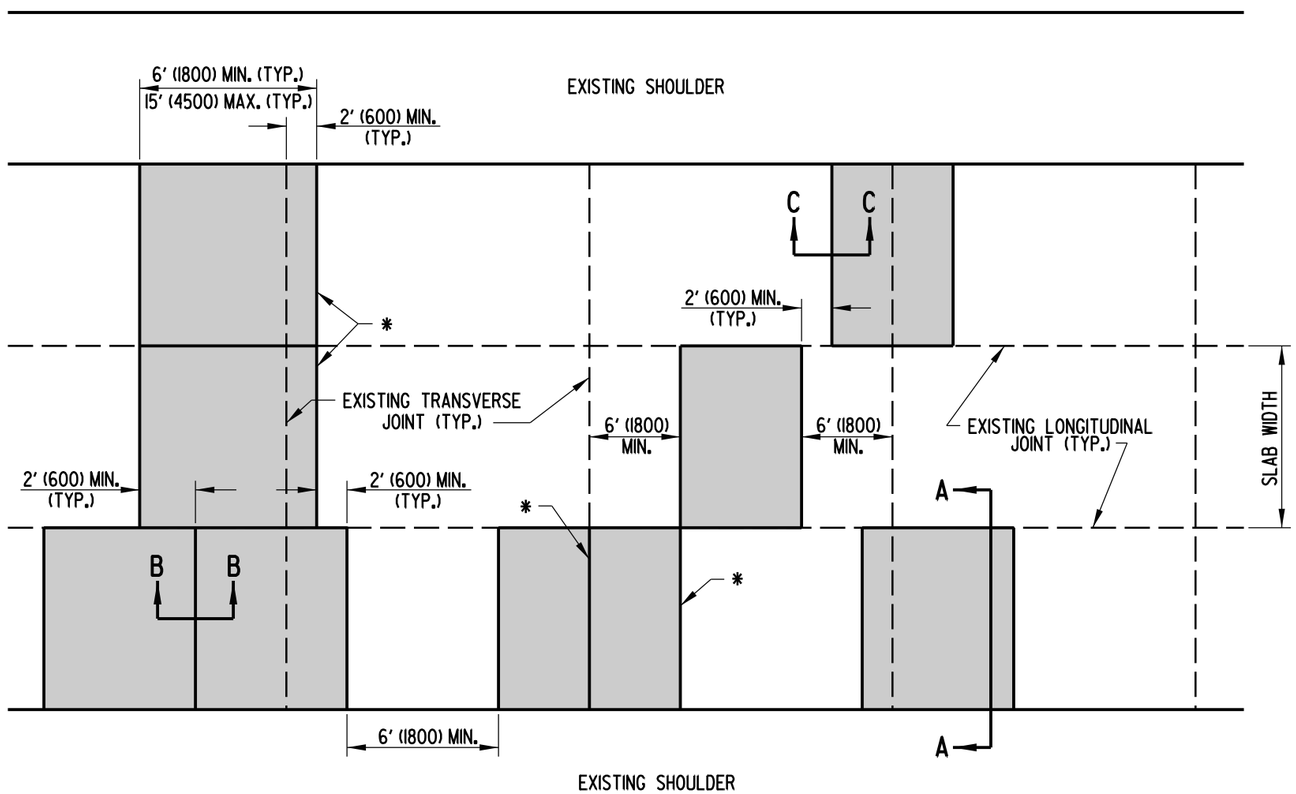

PLAN

* - PROPOSED LOCATIONS FOR TRANSVERSE JOINTS SHALL EXACTLY MATCH THE ALIGNMENT OF THE FINAL (EXISTING OR RELOCATED) TRANSVERSE JOINTS IN ALL IMMEDIATELY ADJACENT LANES.

NOTES:

1). WHEN REPAIRING EXISTING TRANSVERSE JOINTS, THE PATCH SHALL EXTEND A MINIMUM OF 24" (600) THROUGH THE EXISTING JOINT, WHICH WILL RELOCATE THE JOINT.

2). PROPOSED LOCATIONS FOR TRANSVERSE JOINTS, WHEN NOT ALIGNED WITH THE FINAL EXPECTED TRANSVERSE JOINT LOCATIONS IN THE IMMEDIATELY ADJACENT LANES, SHALL BE OFFSET A MINIMUM OF 2' (600) FROM THE AFFORMENTIONED JOINTS.

3). THE LONGITUDINAL JOINT ALIGNMENT SHALL BE STRAIGHT AND CONTINUOUS THROUGH THE REPAIRED AREA.

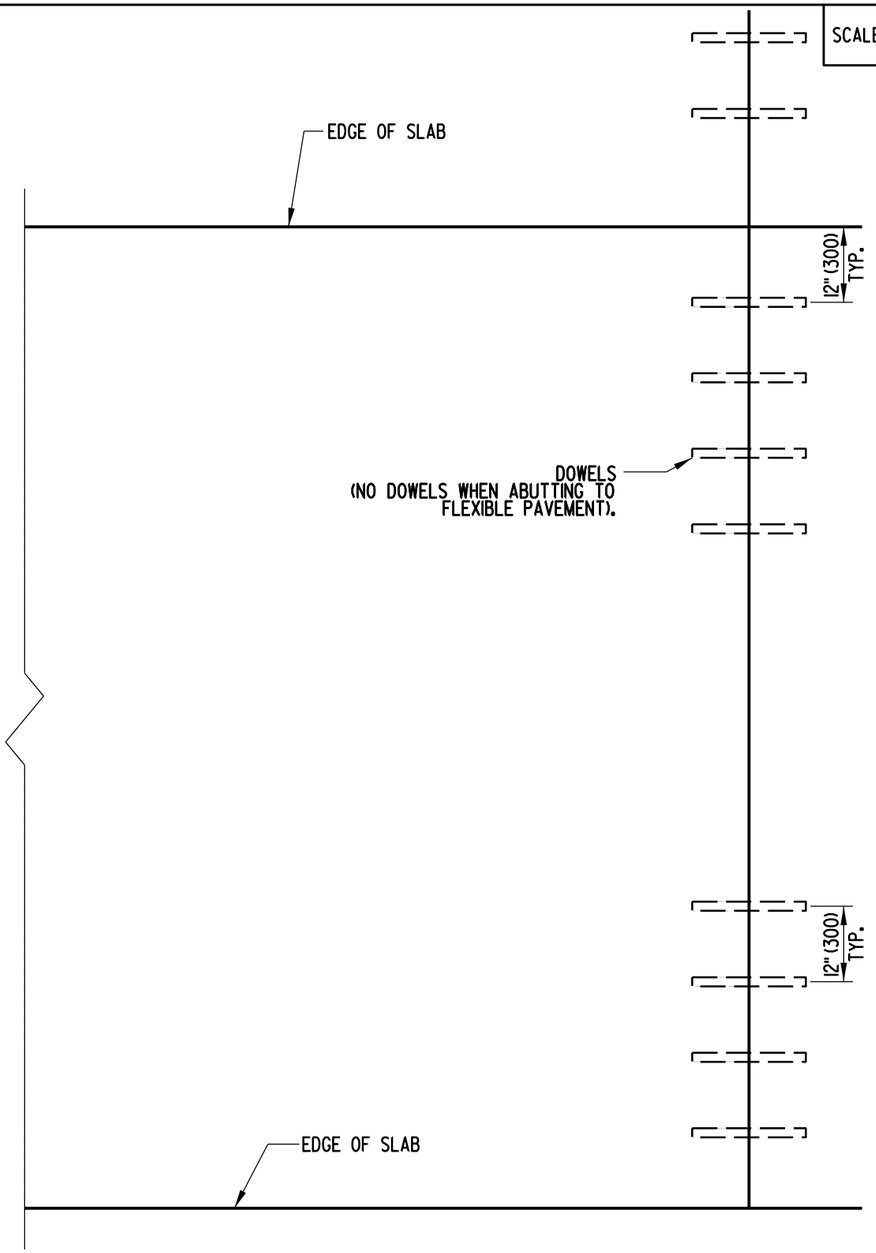

SLAB PLAN (WITH DOWEL AND TIE LOCATIONS)

FULL DEPTH PATCH

DELAWARE DEPARTMENT OF TRANSPORTATION	P.C.C. PAVEMENT PATCHING			APPROVED CHIEF ENGINEER DATE 11/18/08
	STANDARD NO. P-2 (2008)	SHT. 1	OF 5	RECOMMENDED DESIGN ENGINEER DATE 11/17/08

11/14/2008

SCALE : N.T.S.

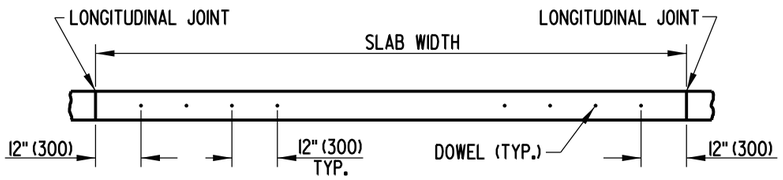

SECTION A-A

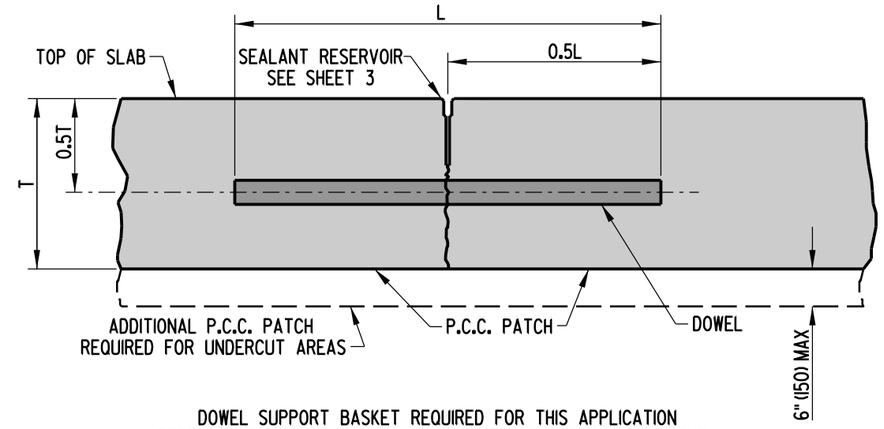

DOWEL SUPPORT BASKET REQUIRED FOR THIS APPLICATION
(REFER TO STANDARD CONSTRUCTION DETAIL FOR P.C.C. PAVEMENT.)

SECTION B-B

TRANSVERSE SAW-CUT USED FOR
JOINTS LOCATED WITHIN THE PATCH

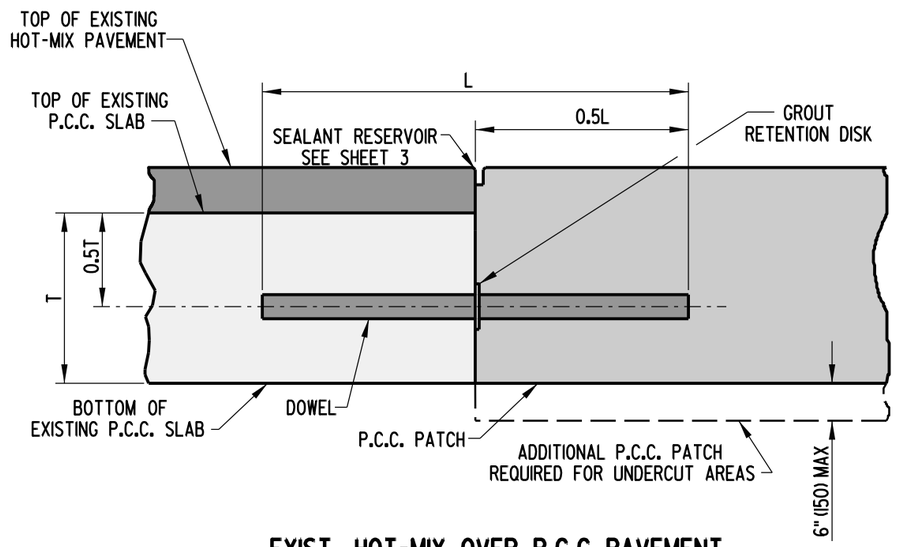

EXIST. HOT-MIX OVER P.C.C. PAVEMENT

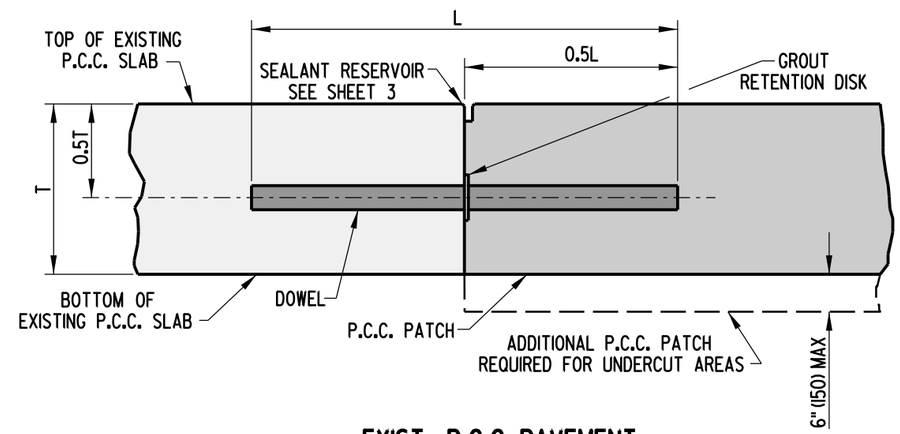

EXIST. P.C.C. PAVEMENT

SECTION C-C

TRANSVERSE CONSTRUCTION JOINT USED ON
JOINTS BETWEEN EXISTING PAVEMENT AND PATCH

FULL DEPTH PATCH

DELAWARE DEPARTMENT OF TRANSPORTATION	P.C.C. PAVEMENT PATCHING		APPROVED CHIEF ENGINEER — DATE 11/18/08
	STANDARD NO. P-2 (2008)	SHT. 2 OF 5	RECOMMENDED DESIGN ENGINEER — DATE 11/17/08

11/14/2008

SCALE : N.T.S.

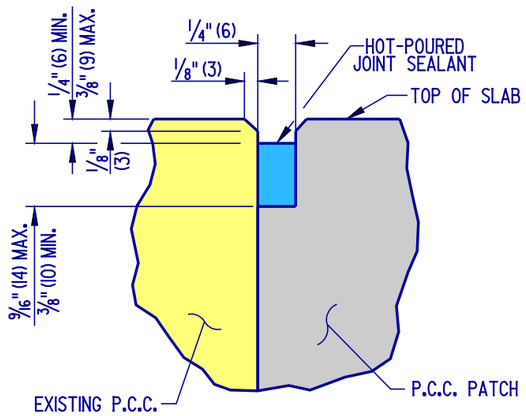

SEALANT DETAIL- LONGITUDINAL JOINT

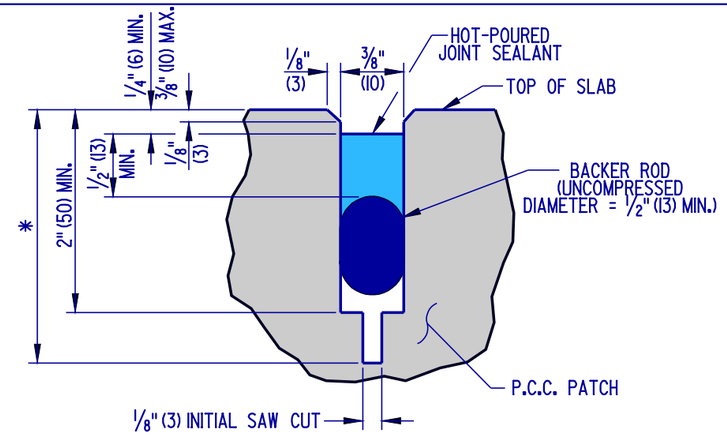

* - 0.3T (T ≤ 10" (250) P.C.C. PAVEMENT)
0.4T (T > 10" (250) P.C.C. PAVEMENT)

SEALANT DETAIL- TRANSVERSE SAW-CUT JOINT

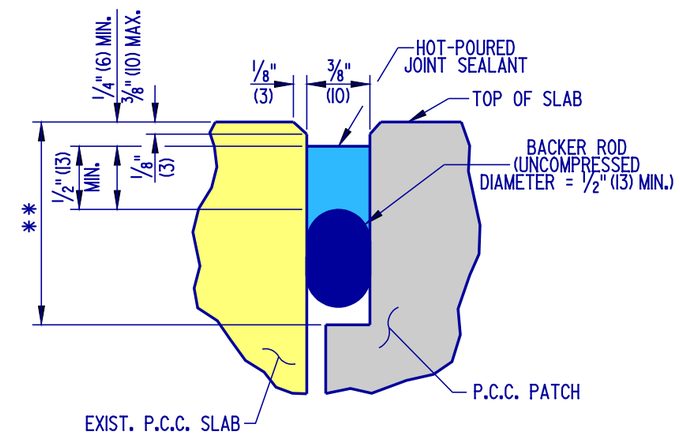

** - 2" (50) MIN. WITH BACKER ROD
5/8" (16) MIN. WITH BOND BREAKER TAPE

SEALANT DETAIL- TRANSVERSE CONSTRUCTION JOINT

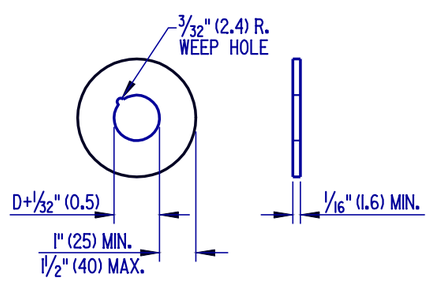

D - DOWEL DIAMETER (INCLUDING PROTECTING COATINGS, IF ANY.)

GROUT RETENTION DISK

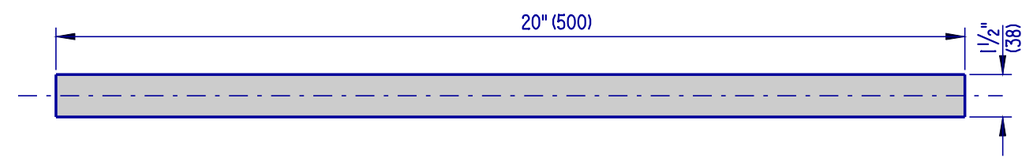

DOWEL BAR

NOTES:

1). AS DIMENSIONED, THE WIDTH OF THE TRANSVERSE SEALANT RESERVOIR IS APPLICABLE WHEN THE TEMPERATURE OF THE PAVEMENT SURFACE IS BETWEEN 60°F (16°C) AND 80°F (27°C). WHEN THE TEMPERATURE IS BELOW 60°F (16°C), THE SEALANT RESERVOIR SHALL BE CUT 1/16" (2) WIDER. WHEN THE TEMPERATURE IS ABOVE 80°F (27°C), THE SEALANT RESERVOIR SHALL BE CUT 1/16" (2) NARROWER.

2). "T" REFERS TO THE EXISTING "AS-BUILT" SLAB THICKNESS.

3). TOLERANCE ON ALL JOINT SEALANT DETAIL DIMENSIONS SHOWN WITHOUT RANGES SHALL BE PLUS 1/16" (2), MINUS 0" (0).

4). THE TOP EDGES OF THE CONTACT SURFACES OF THE SEALANT MATERIAL ON BOTH SIDES OF THE JOINT RESERVOIR SHALL BE AT THE SAME ELEVATION.

FULL DEPTH PATCH

DELAWARE DEPARTMENT OF TRANSPORTATION	P.C.C. PAVEMENT PATCHING		APPROVED ____ CHIEF ENGINEER ____ DATE
	STANDARD NO. P-2 (2004)	SHT. 3 OF 5	RECOMMENDED ____ DESIGN ENGINEER ____ DATE

10/01/2004

SCALE : N.T.S.

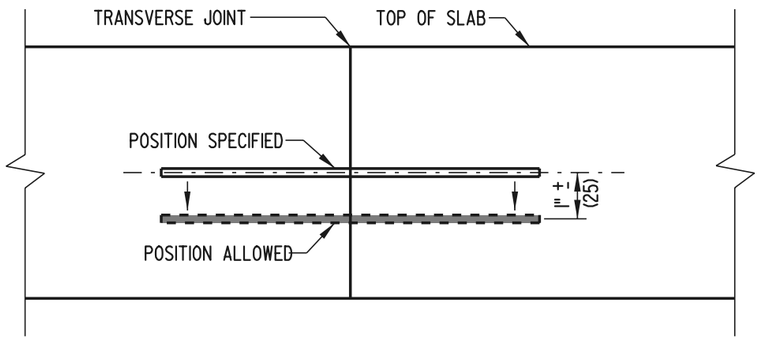

VERTICAL TRANSLATION

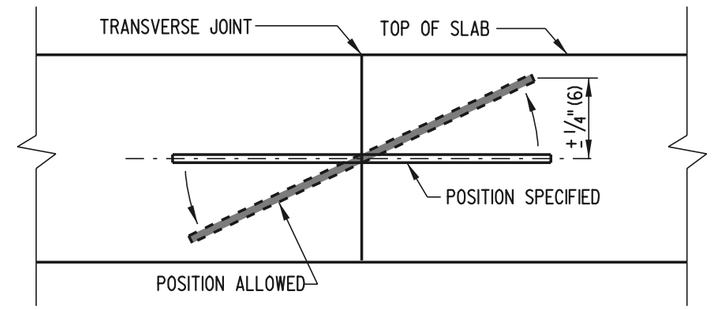

VERTICAL ROTATION

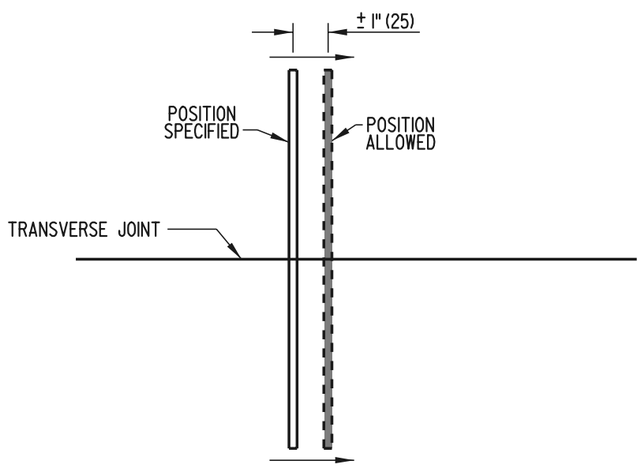

HORIZONTAL TRANSLATION

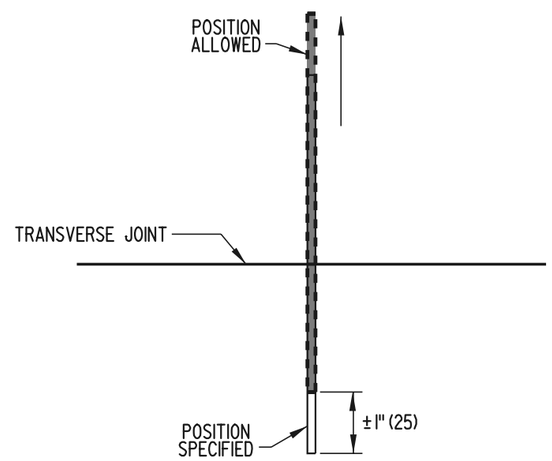

LONGITUDINAL TRANSLATION

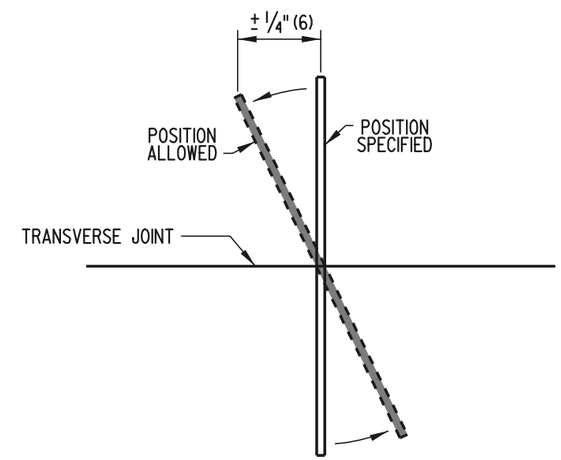

HORIZONTAL ROTATION

DOWEL & TIE BAR PLACEMENT TOLERANCES

FULL DEPTH PATCH

DELAWARE DEPARTMENT OF TRANSPORTATION	P.C.C. PAVEMENT PATCHING		APPROVED CHIEF ENGINEER DATE 6/18/01
	STANDARD NO. P-2 (2001)	SHT. 4 OF 5	RECOMMENDED DESIGN ENGINEER DATE 6/18/01

04/18/2001

SCALE : N.T.S.

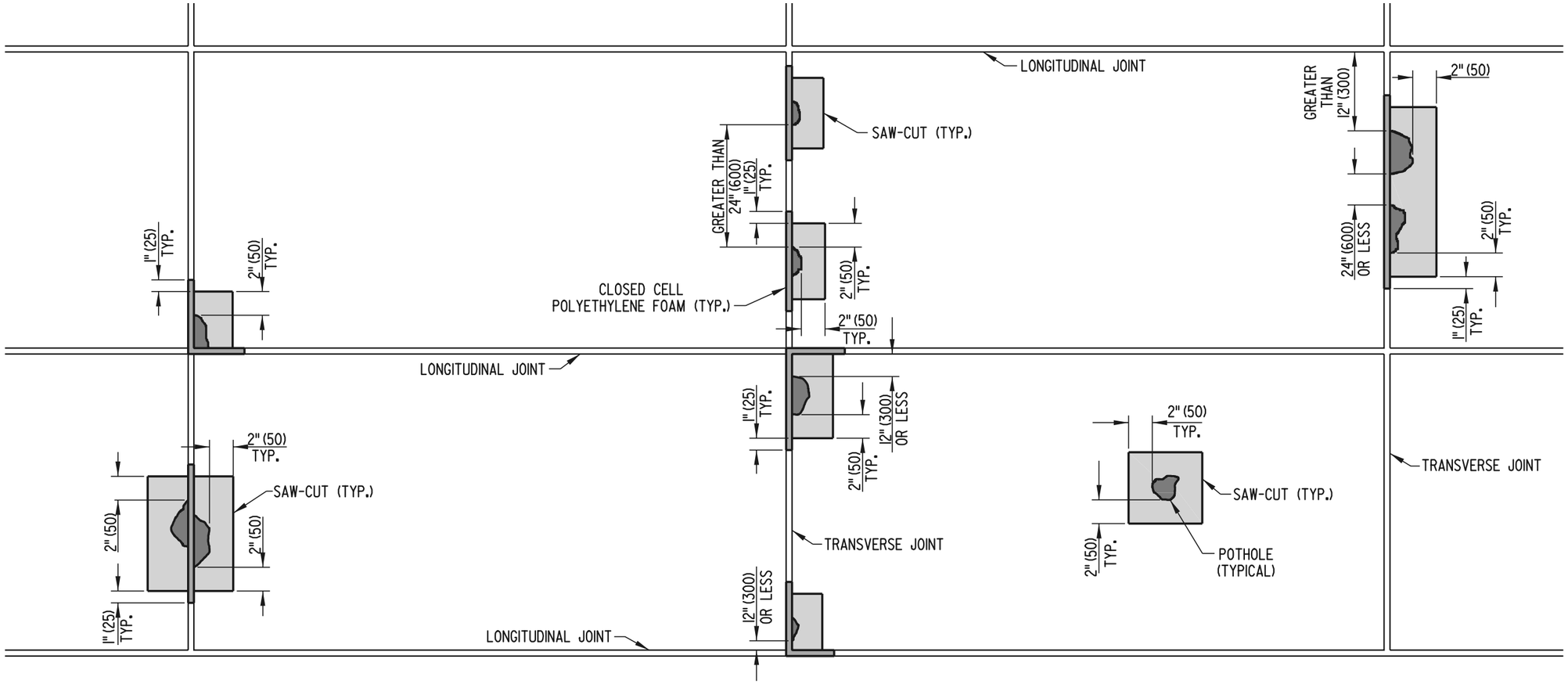

PLAN

NOTE: CLOSED CELL POLYETHYLENE FOAM SHALL BE THE SAME WIDTH AS THE JOINT AND 5" (125) IN DEPTH. AFTER THE CONCRETE IN THE REPAIR AREA HAS ACHIEVED THE SPECIFIED STRENGTH, THE FOAM SHALL BE REMOVED AND REPLACED WITH BACKER ROD AND HOT-POUR SEALANT MEETING ALL APPLICABLE STANDARD DETAILS AND SPECIFICATIONS.

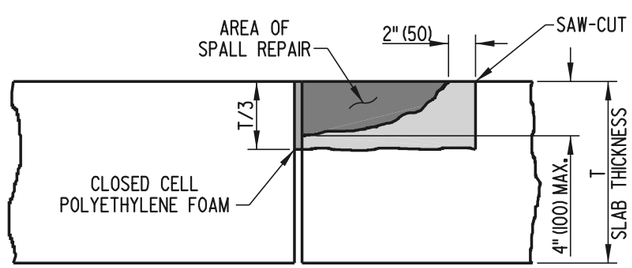

SECTION WITH SPALL ADJACENT TO JOINT

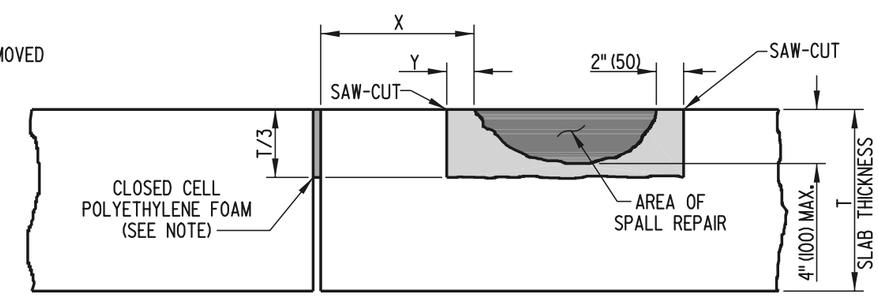

SECTION WITH SPALL NOT ADJACENT TO JOINT

NOTE: WHEN X > 12" (300), THEN Y=1" (25) AND POLYETHYLENE FOAM IS NOT USED.
WHEN X ≤ 12" (300), THEN Y=X AND POLYETHYLENE FOAM IS USED.

PARTIAL DEPTH PATCH

DELAWARE DEPARTMENT OF TRANSPORTATION	P.C.C. PAVEMENT PATCHING		APPROVED [signature] CHIEF ENGINEER DATE 6/18/01
	STANDARD NO. P-2 (2001)	SHT. 5 OF 5	RECOMMENDED [signature] DESIGN ENGINEER DATE 6/18/01

05/22/2001

SCALE : N.T.S.

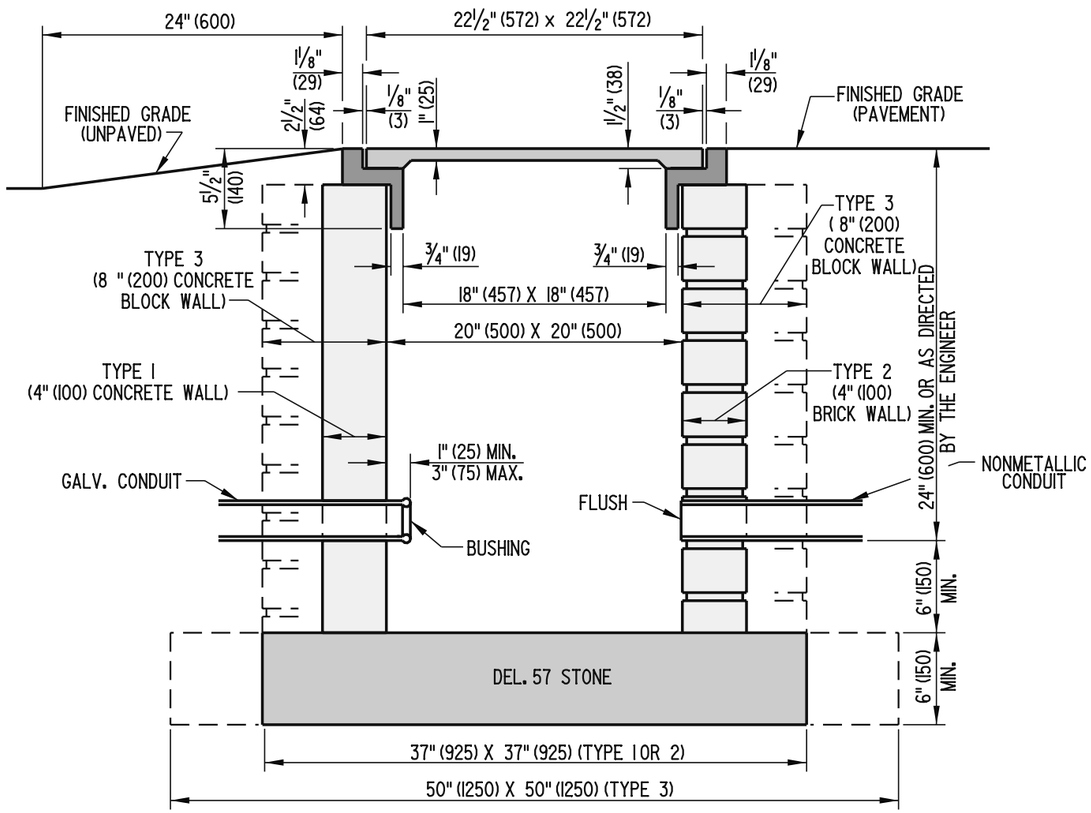

SECTION A-A

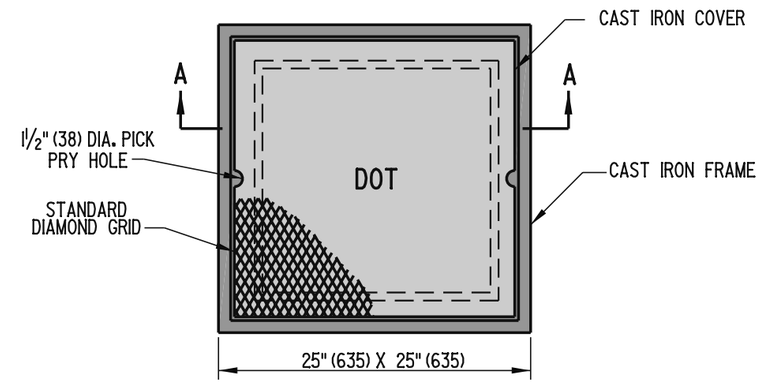

PLAN VIEW

NOTES: 1). TYPE 1 CONDUIT JUNCTION WELL SHALL BE PRECAST CONCRETE. AT LEAST ONE HOLE IN PRECAST WELLS WILL BE OF A 5" (125) DIAMETER COMPLETELY THROUGH THE WALL. UNUSED HOLES SHALL BE PLUGGED.

2). TYPE 2 AND TYPE 3 CONDUIT JUNCTION WELLS SHALL BE BRICK AND WILL CONFORM TO STANDARD SPECIFICATIONS FOR BRICK MASONRY. JOINTS SHALL BE CONCAVE TYPE. TYPE 2 WALLS WILL BE A NOMINAL 4" (100) THICK. TYPE 3 WALL WILL BE A NOMINAL 8" (200) THICK.

3). TYPE 2 AND TYPE 3 CONDUIT JUNCTION WELLS SHALL NOT BE PLACED UNDER ANY TYPE OF PAVEMENT.

4). ALL CONDUIT JUNCTION WELLS CONSTRUCTED WITHIN PAVEMENT, SIDEWALKS, ETC. WILL BE CONSTRUCTED FLUSH WITH THE SURFACE OF THE SAME. INSTALLATION IN UNPAVED AREAS WILL BE CONSTRUCTED ABOVE GRADE AND GRADED TO DRAIN AWAY FROM CONDUIT JUNCTION WELL.

DELAWARE DEPARTMENT OF TRANSPORTATION	CONDUIT JUNCTION WELL, TYPES 1, 2, AND 3		APPROVED Carolann Wicks (CHIEF ENGINEER) 12/5/05 (DATE)
	STANDARD NO. T-1 (2005)	SHT. 1 OF 1	RECOMMENDED (DESIGN ENGINEER) 11/29/05 (DATE)

09/08/2005

SCALE : N.T.S.

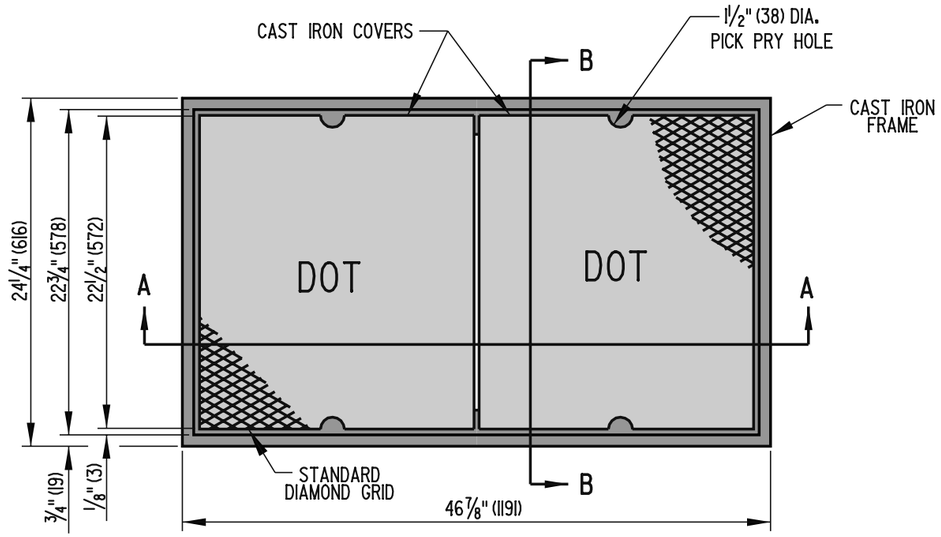

PLAN VIEW

NOTES: 1). TYPE 4 CONDUIT JUNCTION WELL SHALL BE PRECAST CONCRETE. AT LEAST ONE HOLE IN PRECAST WELLS WILL BE OF A 5" (125) DIAMETER COMPLETELY THROUGH THE WALL. UNUSED HOLES SHALL BE PLUGGED.

2). ALL CONDUIT JUNCTION WELLS CONSTRUCTED WITHIN PAVEMENT, SIDEWALKS, ETC. WILL BE CONSTRUCTED FLUSH WITH THE SURFACE OF THE SAME. INSTALLATION IN UNPAVED AREAS WILL BE CONSTRUCTED ABOVE GRADE AND GRADED TO DRAIN AWAY FROM CONDUIT JUNCTION WELL.

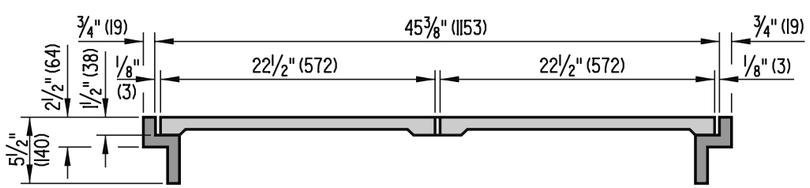

SECTION A-A

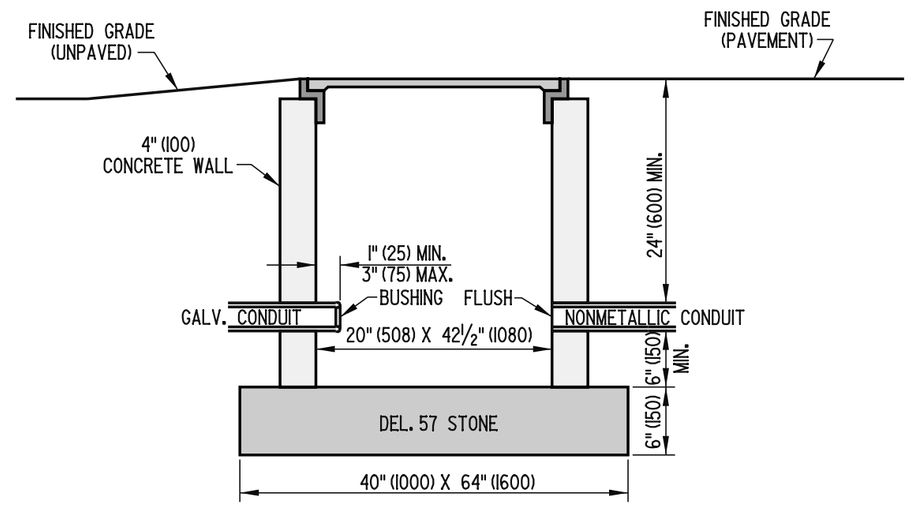

SECTION B-B

DELAWARE DEPARTMENT OF TRANSPORTATION	CONDUIT JUNCTION WELL, TYPE 4		APPROVED Carolann Wicks CHIEF ENGINEER — 12/5/05 DATE
	STANDARD NO. T-2 (2005)	SHT. 1 OF 1	RECOMMENDED [illegible] DESIGN ENGINEER — 11/29/05 DATE

09/08/2005

SCALE : N.T.S.

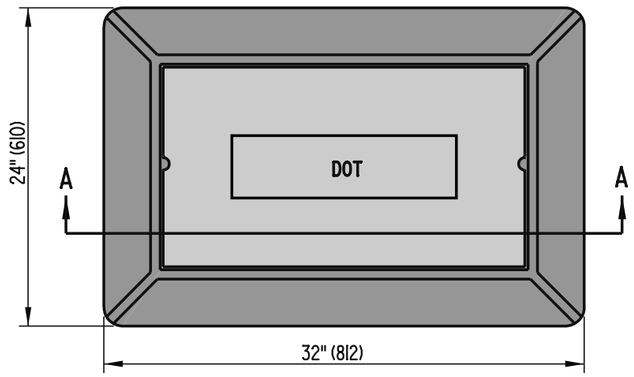

PLAN VIEW

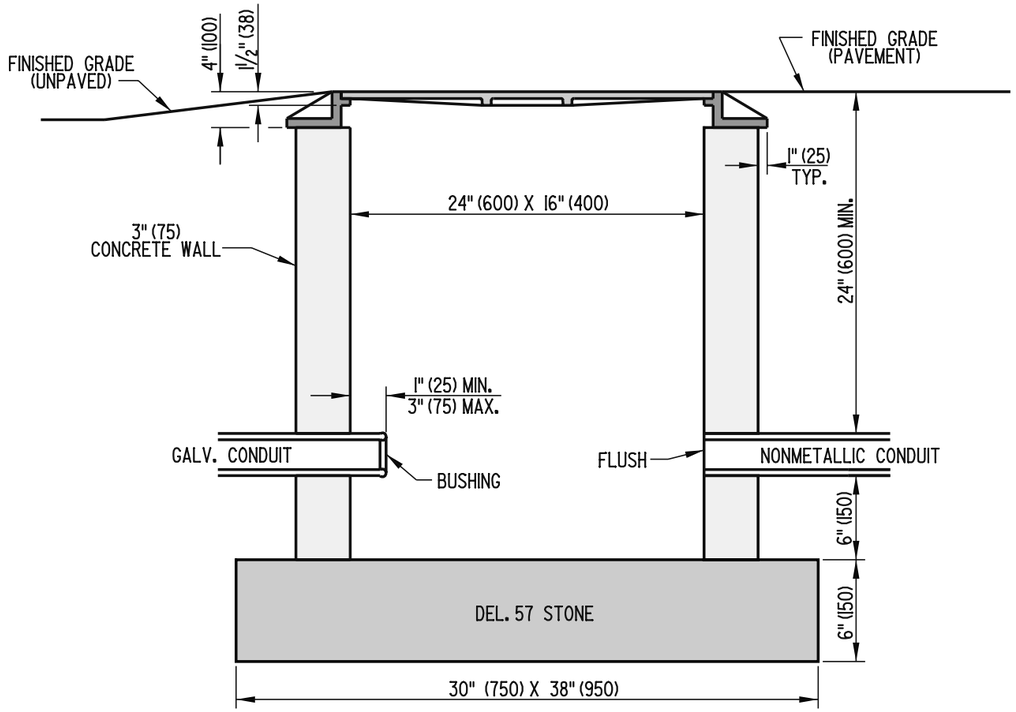

SECTION A-A

NOTES: 1). TYPE 5 CONDUIT JUNCTION WELL SHALL BE PRECAST CONCRETE. AT LEAST ONE HOLE IN PRECAST WELLS WILL BE OF A 5" (125) DIAMETER COMPLETELY THROUGH THE WALL. UNUSED HOLES SHALL BE PLUGGED.

2). ALL CONDUIT JUNCTION WELLS CONSTRUCTED WITHIN PAVEMENT, SIDEWALKS, ETC. WILL BE CONSTRUCTED FLUSH WITH THE SURFACE OF THE SAME. INSTALLATION IN UNPAVED AREAS WILL BE CONSTRUCTED ABOVE GRADE AND GRADED TO DRAIN AWAY FROM CONDUIT JUNCTION WELL.

DELAWARE DEPARTMENT OF TRANSPORTATION	CONDUIT JUNCTION WELL, TYPE 5		APPROVED Carolann Wicks CHIEF ENGINEER 12/5/05 DATE
	STANDARD NO. T-3 (2005)	SHT. 1 OF 1	RECOMMENDED [signature] DESIGN ENGINEER 11/29/05 DATE

09/08/2005

SCALE : N.T.S.

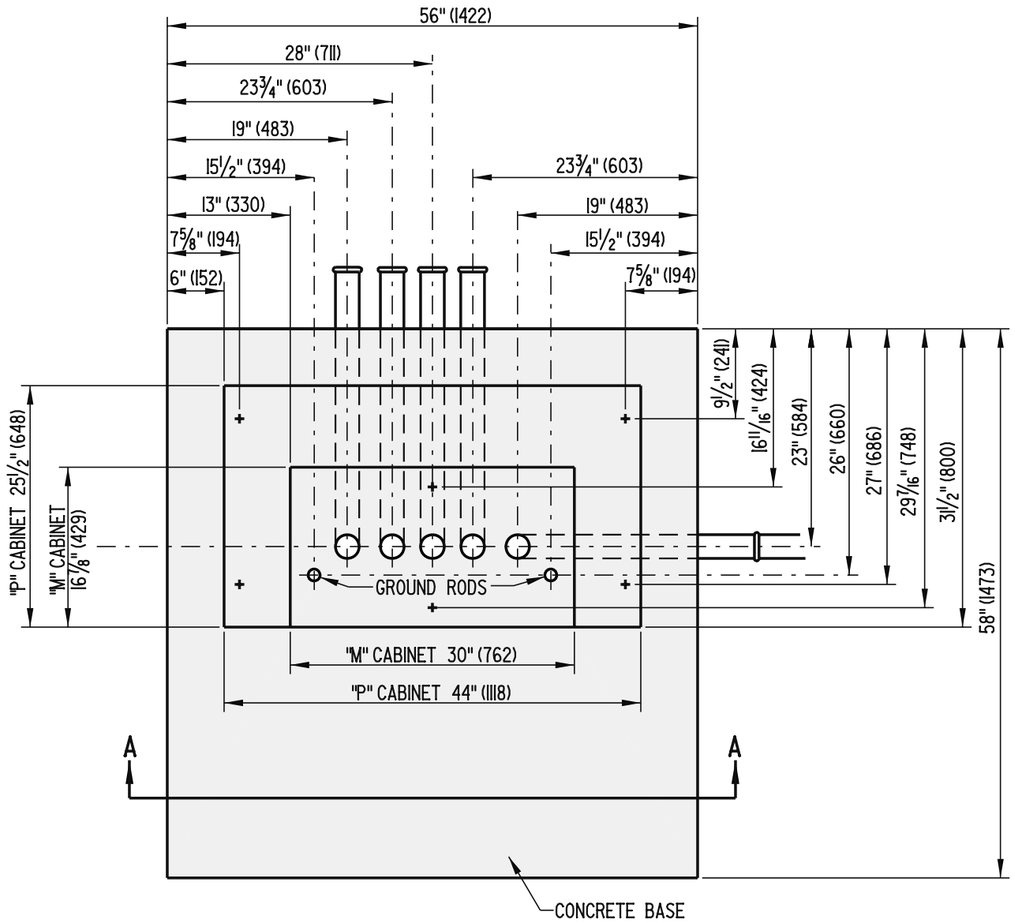

PLAN VIEW

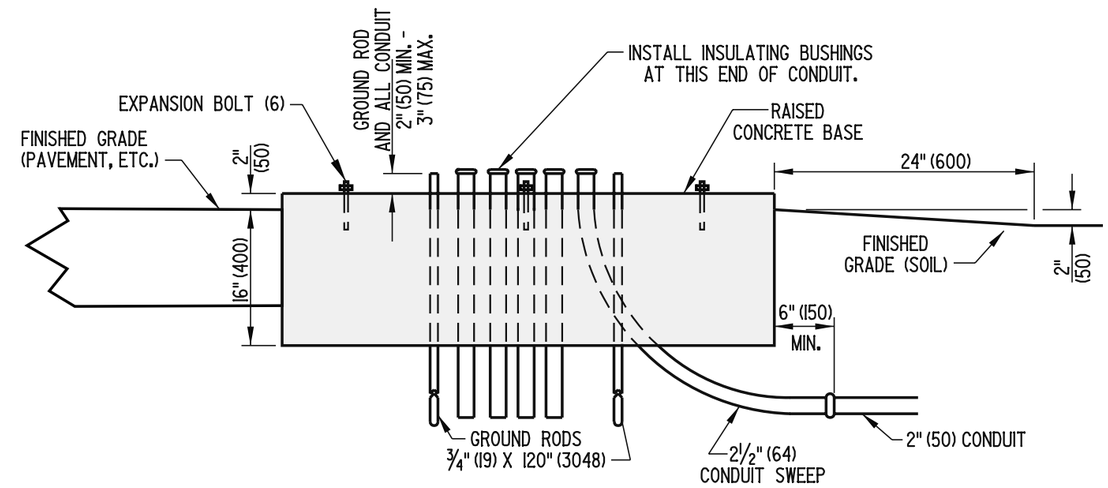

SECTION A-A

CONCRETE CABINET BASE

DELAWARE DEPARTMENT OF TRANSPORTATION	CABINET BASES (TYPES 'M' & 'P')		APPROVED Carolann Wicks CHIEF ENGINEER 12/5/05 DATE
	STANDARD NO. T-4 (2005)	SHT. 1 OF 1	RECOMMENDED [signature] DESIGN ENGINEER 11/29/05 DATE

09/09/2005

SCALE : N.T.S.

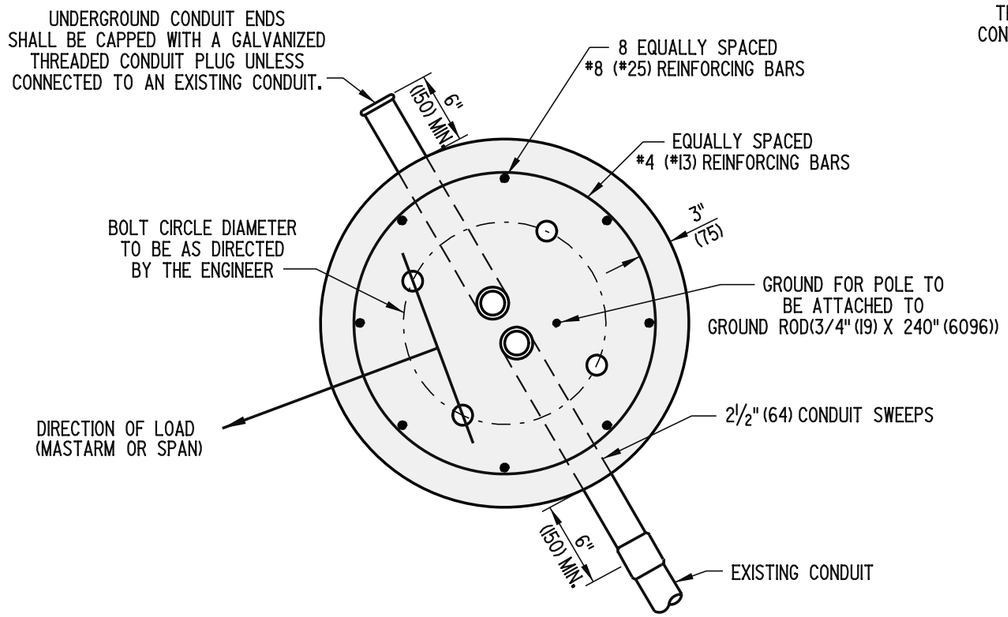

ROUND BASE

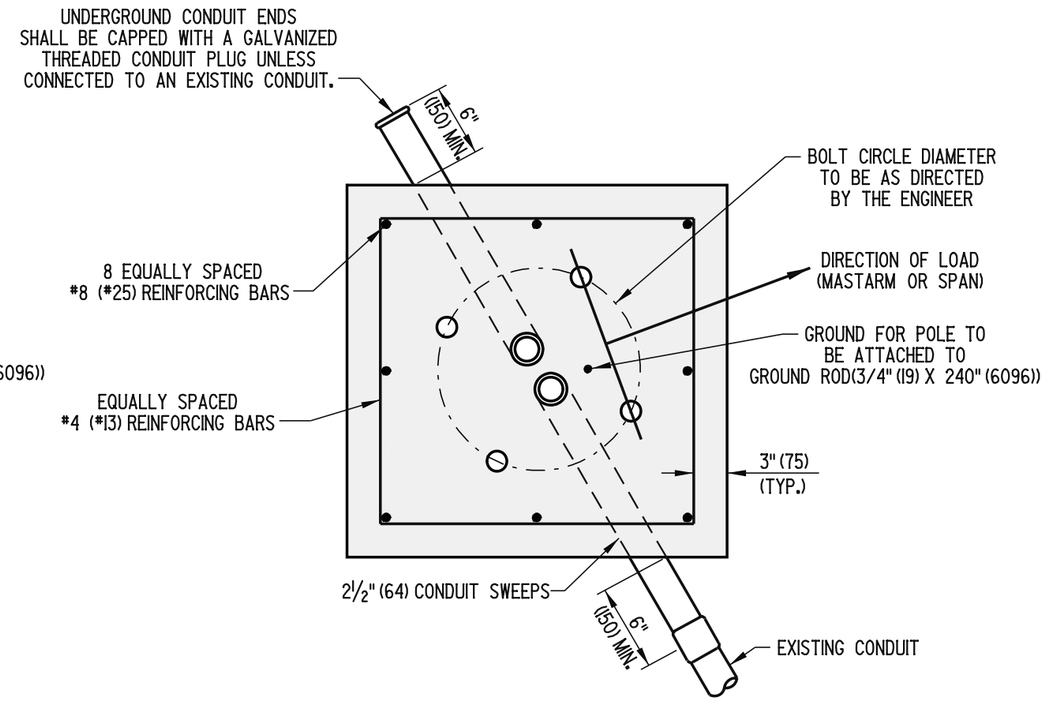

SQUARE BASE

NOTE: BASE DEPENDENT ON POLE AND EQUIPMENT TO BE ATTACHED.

DELAWARE DEPARTMENT OF TRANSPORTATION	POLE BASES		APPROVED Carolann Wicks CHIEF ENGINEER 12/5/05 DATE
	STANDARD NO. T-5 (2005)	SHT. 1 OF 3	RECOMMENDED [signature] DESIGN ENGINEER 11/29/05 DATE

09/08/2005

SCALE : N.T.S.

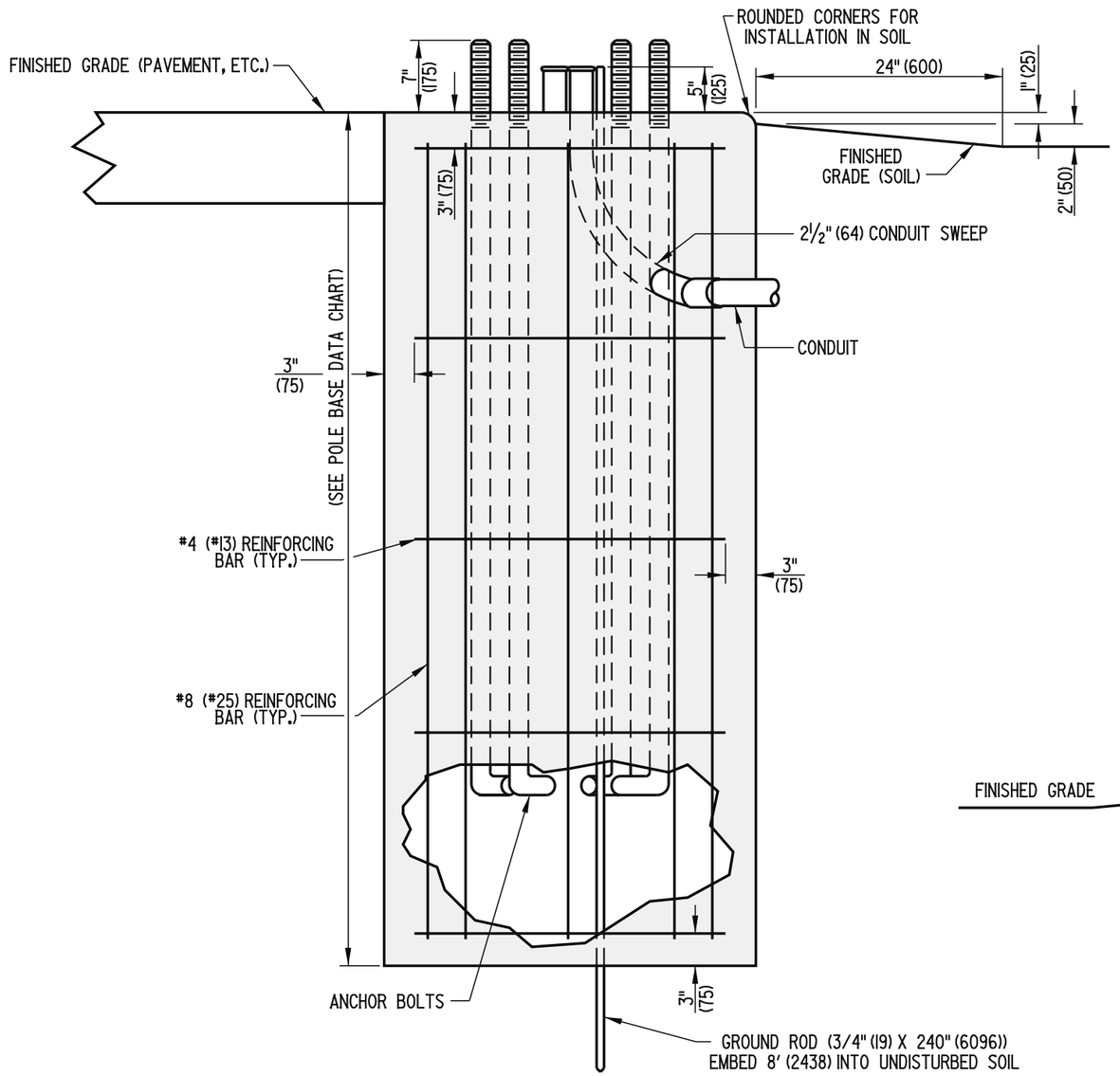

TYPICAL SECTION (BASES 1,2,2A,2B,3,3A,3B, AND 7)

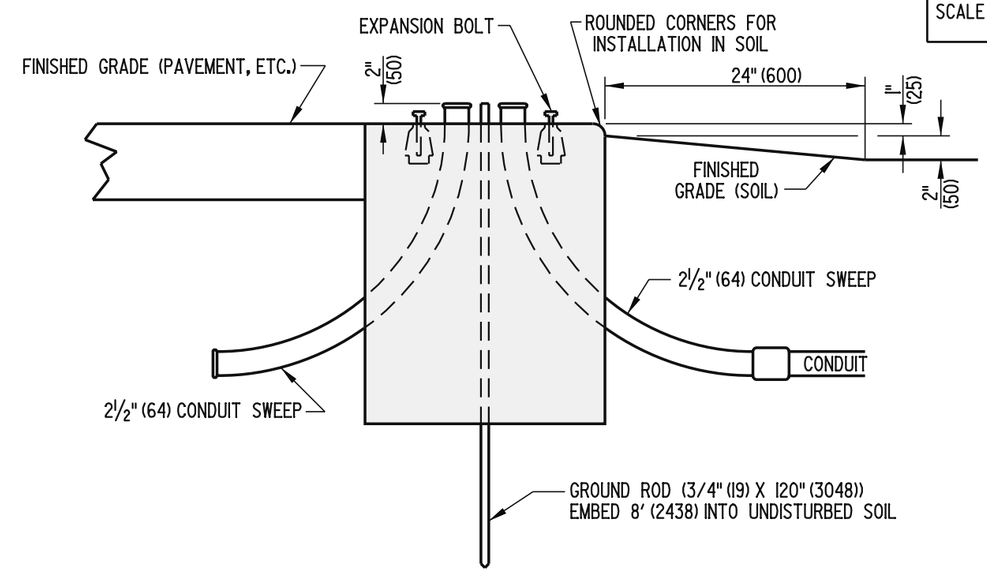

TYPICAL SECTION (BASE 4)

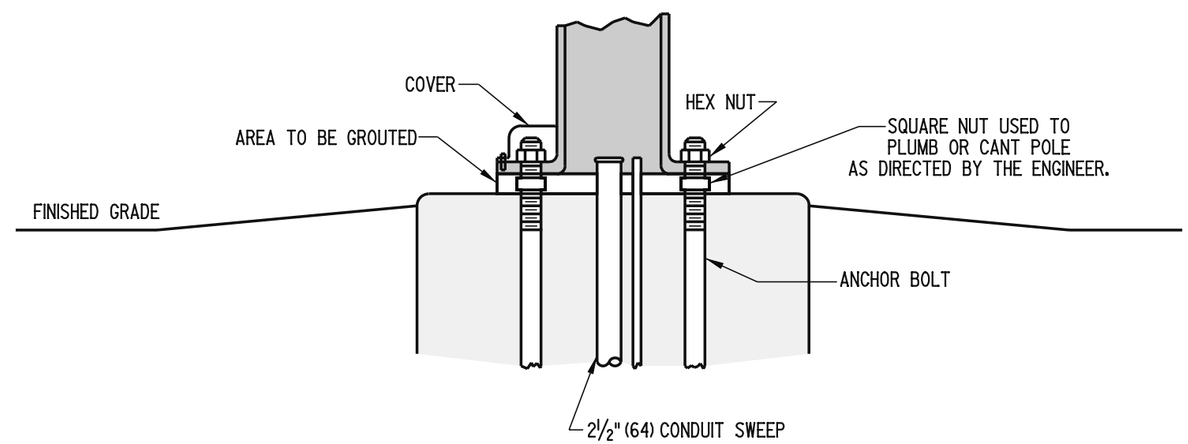

TYPICAL INSTALLATION (BASES 1,2,2A,2B,3,3A,3B,4, AND 7)

NOTES:
1.) PLACE 2 EACH 6" (150) LONG x ½" (13) DIA. P.V.C., SCHEDULE 40 (TYP) VENTS IN THE GROUT AS DIRECTED IN THE FIELD BY ENGINEER.
2.) SEE POLE BASE DATA CHART FOR POLE BASE DIMENSIONS.

DELAWARE DEPARTMENT OF TRANSPORTATION	POLE BASES		APPROVED Carolann Wicks CHIEF ENGINEER 12/5/05 DATE
	STANDARD NO. T-5 (2005)	SHT. 2 OF 3	RECOMMENDED [signature] DESIGN ENGINEER 11/29/05 DATE

09/08/2005

SCALE : N.T.S.

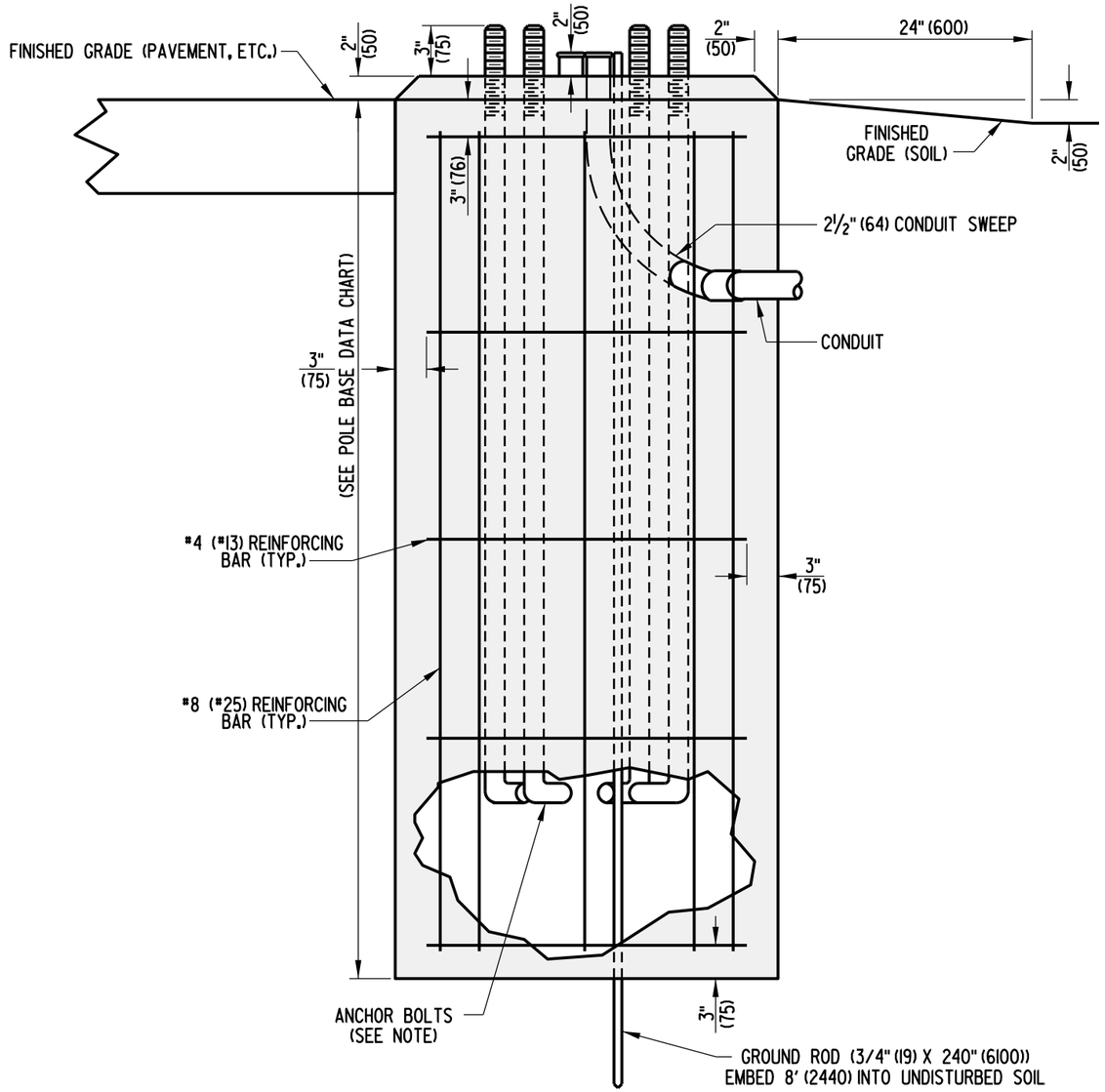

TYPICAL SECTION (BASES 5 AND 6)

NOTE:
SEE SPECIFICATIONS AND DETAILS FROM CURRENT PURCHASING CONTRACT FOR ANCHOR BOLT DIMENSIONS.

POLE BASE DATA CHART

POLE BASE TYPE #	DIAMETER	DEPTH *	#4 (#13) HORIZONTAL REINFORCING BARS	#8 (#25) VERTICAL REINFORCING BARS
1	36" (915)	7' (2150)	5	8
2	36" (915)	10' (3050)	6	8
2A	48" (1220)	8' (2450)	5	8
2B	60" (1525)	7' (2150)	5	8
3	48" (1220)	10' (3050)	6	8
3A	60" (1525)	9' (2750)	6	8
3B	72" (1830)	7' (2150)	5	8
4	24" (610)	2'-4" (725)	NONE	NONE
5	36" (915)	4' (1225)	NONE	NONE
6	24" (610)	6' (1850)	4	8
7	48" (1220)	13'-4" (4000)	7	8

* - ADDITIONAL DEPTH FOR POLE BASE EXTENSION, IF REQUIRED, TO BE DETERMINED BY TRAFFIC ENGINEERING AND MANAGEMENT (TEAM) FIELD REPRESENTATIVE.

DELAWARE DEPARTMENT OF TRANSPORTATION	POLE BASES	APPROVED CHIEF ENGINEER	DATE 11/18/08
	STANDARD NO. T-5 (2008) SHT. 3 OF 3	RECOMMENDED DESIGN ENGINEER	DATE 11/17/08

07/30/2008

SCALE : N.T.S.

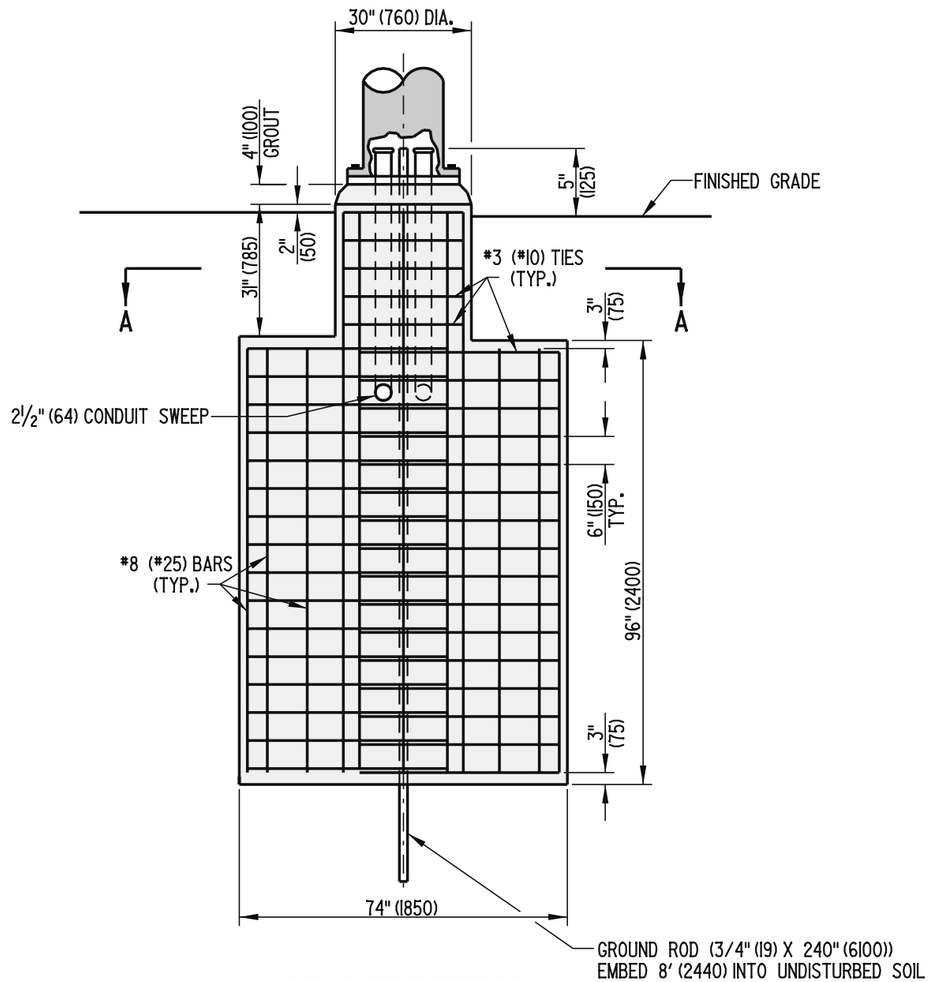

FOUNDATION DETAILS

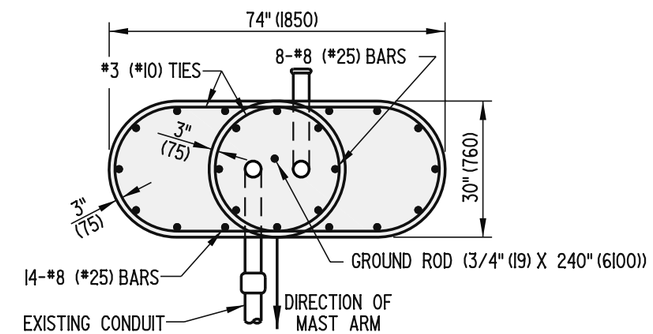

SECTION A-A

NOTES:

1. UNDERGROUND CONDUIT ENDS SHALL BE CAPPED WITH A GALVANIZED THREADED CONDUIT PLUG UNLESS CONNECTED TO AN EXISTING CONDUIT.
2. PLACE 2 EACH 6" (150) x ½" (13) P.V.C., SCHEDULE 40 (TYP) VENTS IN THE GROUT AS DIRECTED IN THE FIELD BY THE ENGINEER.

DELAWARE DEPARTMENT OF TRANSPORTATION	SPECIAL POLE BASE		APPROVED Carolann Wicks CHIEF ENGINEER 12/5/05 DATE
	STANDARD NO. T-6 (2005)	SHT. 1 OF 1	RECOMMENDED [illegible] DESIGN ENGINEER 11/29/05 DATE

09/09/2005

SCALE : N.T.S.

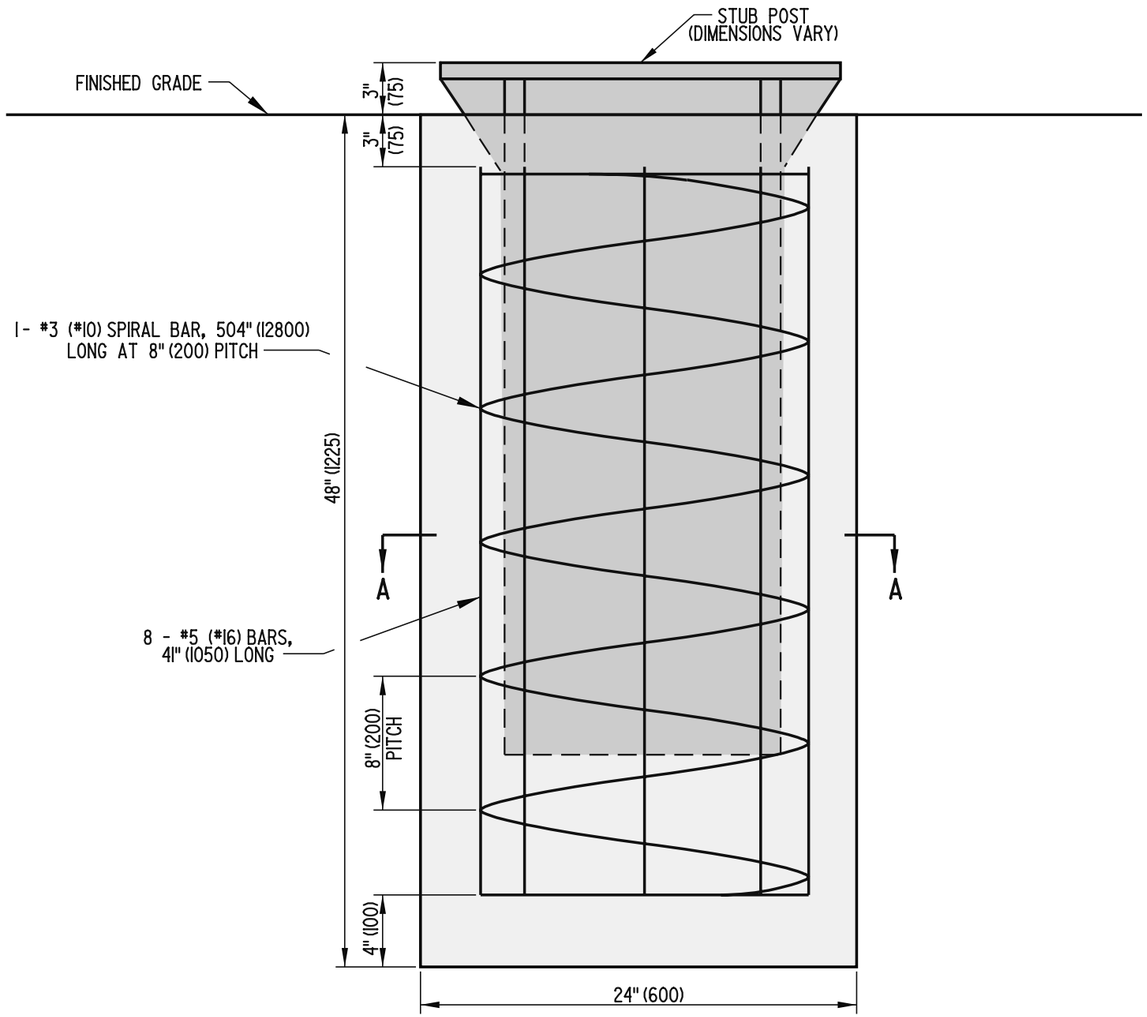

NOTES: 1). STUB POST TO BE SUPPLIED BY THE DEPARTMENTS TRAFFIC, ENGINEERING, AND MANAGEMENT SECTION.

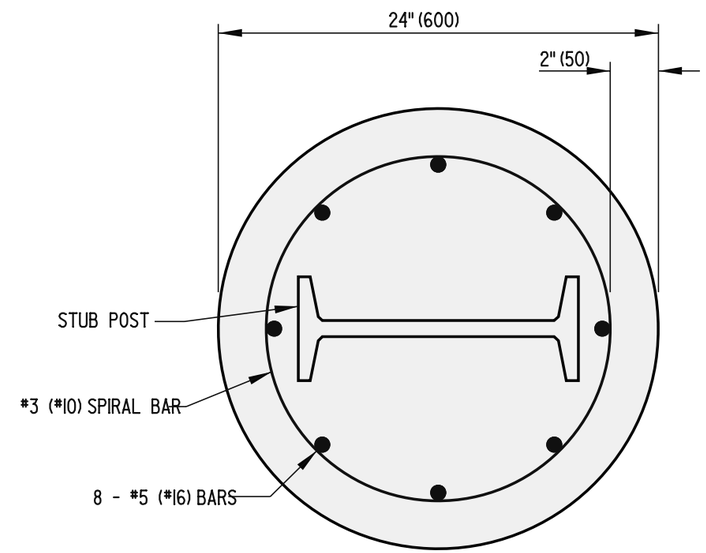

SECTION A-A

DELAWARE DEPARTMENT OF TRANSPORTATION	SIGN FOUNDATION		APPROVED Carolann Wicks CHIEF ENGINEER 12/5/05 DATE
	STANDARD NO. T-7 (2005)	SHT. 1 OF 1	RECOMMENDED [signature] DESIGN ENGINEER 11/29/05 DATE

09/09/2005

SCALE : N.T.S.

NOTES: 1. THE CONTRACTOR SHALL BE RESPONSIBLE FOR PROTECTING THE CONDUIT AGAINST ANY POSSIBLE DAMAGE IN PAVING OPERATIONS.

2. THE WEATHERPROOF FITTING SHALL CONSIST OF A GALVANIZED 1½" (38) COUPLING CONTAINING A STEEL THREADED REDUCING BUSHING (1½" (38) TO ¾" (19)) AND A ¾" (19) WATERTIGHT CONNECTOR FOR SERVICE ENTRANCE CABLE.

3. THE LEAD-IN WIRE SHALL BE RUN THROUGH THE RUBBER OF THE WEATHERPROOF FITTING.

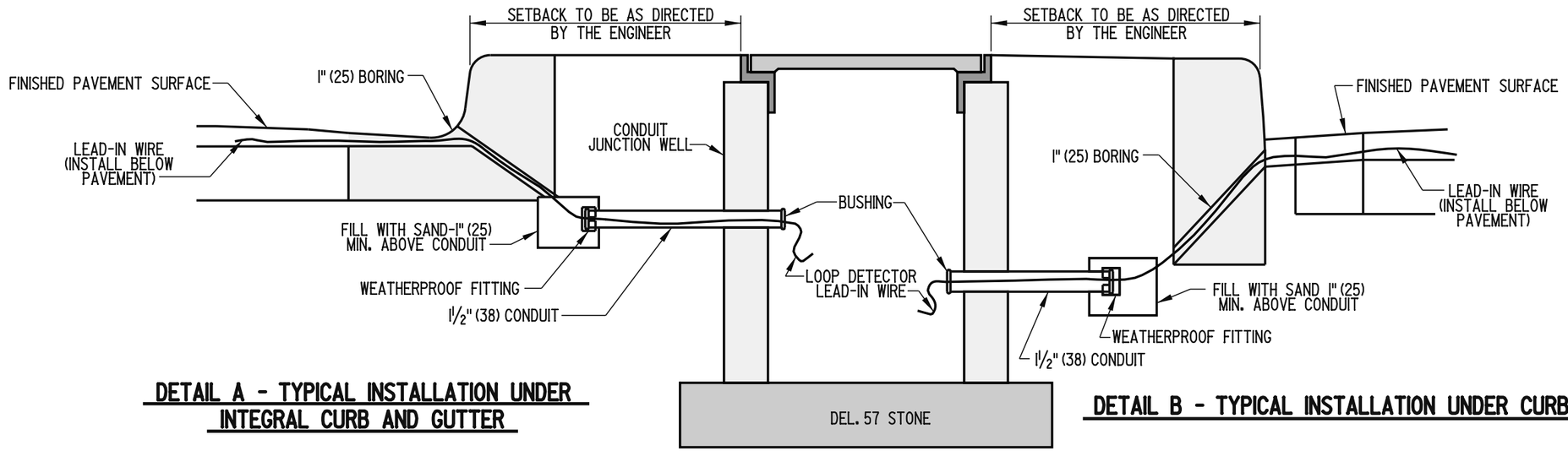

DETAIL A - TYPICAL INSTALLATION UNDER INTEGRAL CURB AND GUTTER

DETAIL B - TYPICAL INSTALLATION UNDER CURBING

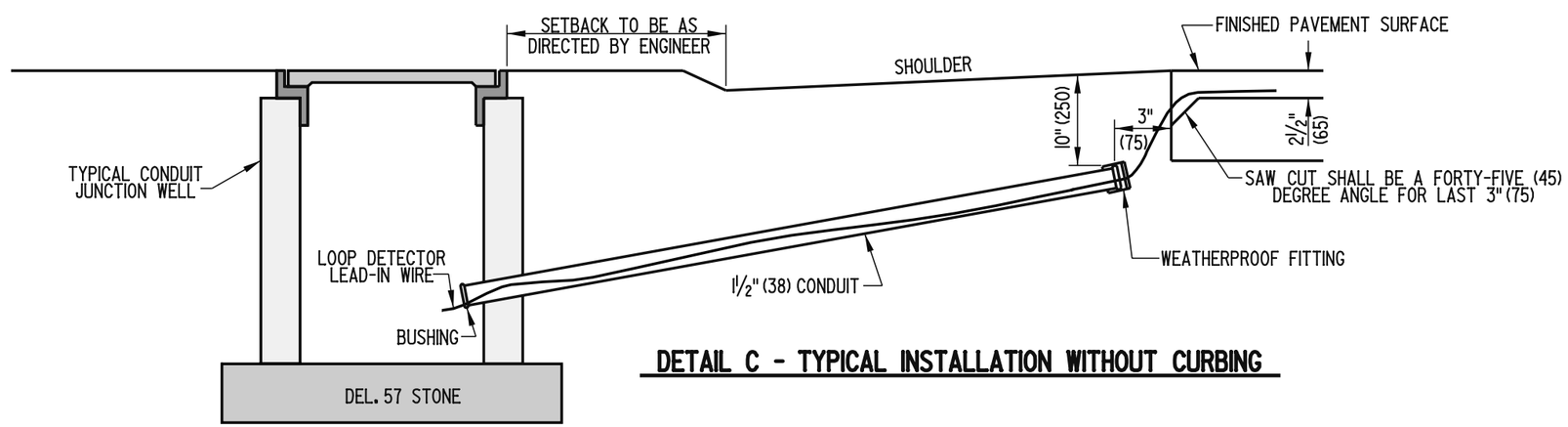

DETAIL C - TYPICAL INSTALLATION WITHOUT CURBING

DELAWARE DEPARTMENT OF TRANSPORTATION	LOOP DETECTOR TO CONDUIT JUNCTION WELL CONNECTION		APPROVED Carolann Wicks (CHIEF ENGINEER) 12/5/05 (DATE)
	STANDARD NO. T-8 (2005)	SHT. 1 OF 1	RECOMMENDED (DESIGN ENGINEER) 11/29/05 (DATE)

09/09/2005

SCALE : N.T.S.

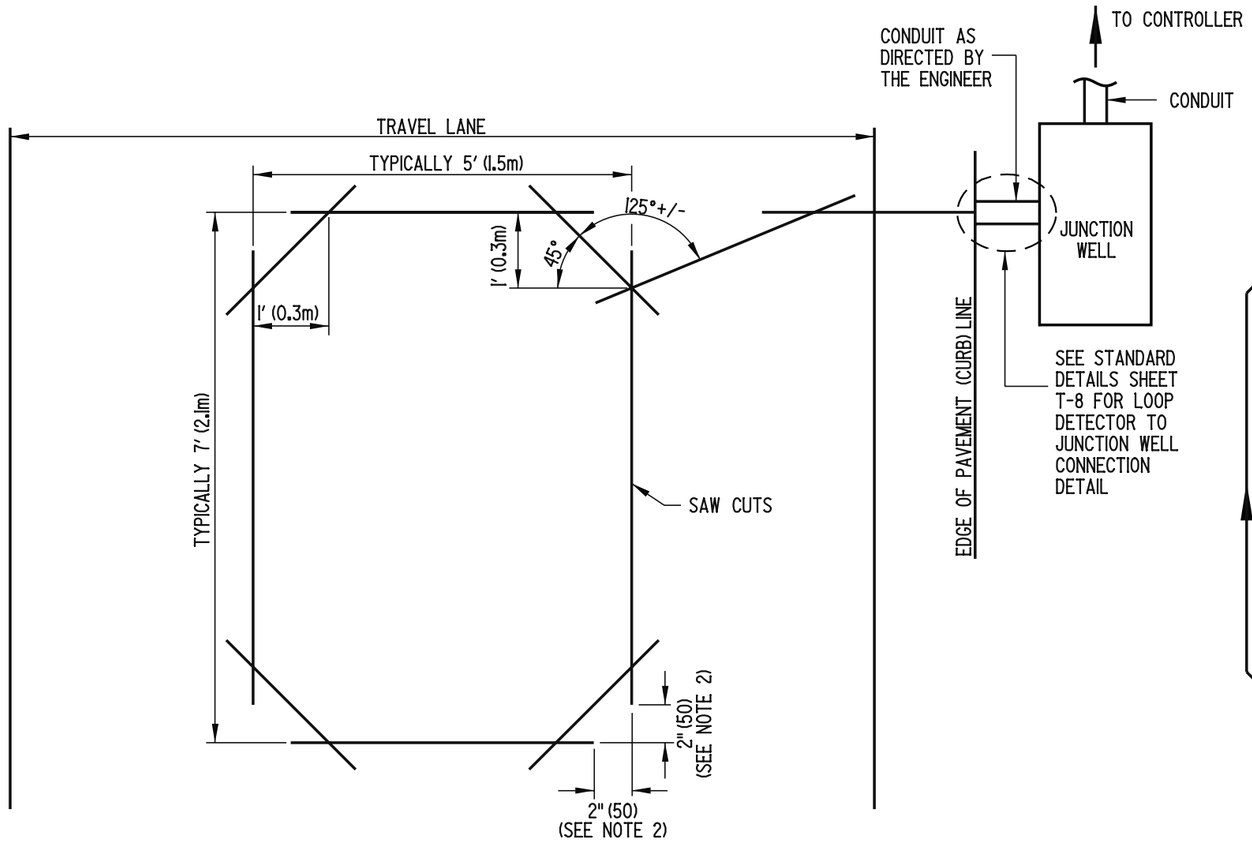

WIRE SLOT CONSTRUCTION

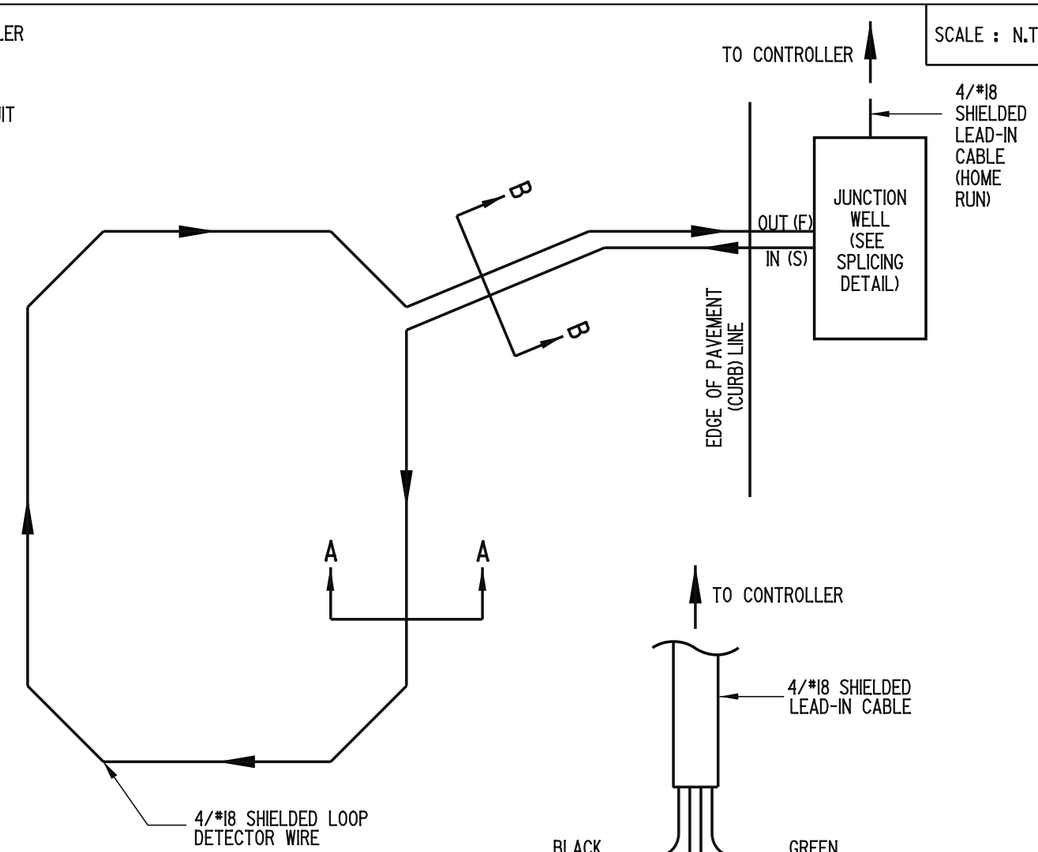

DETAILS FOR INSTALLING LOOP DETECTOR WIRE

(SINGLE WRAP)

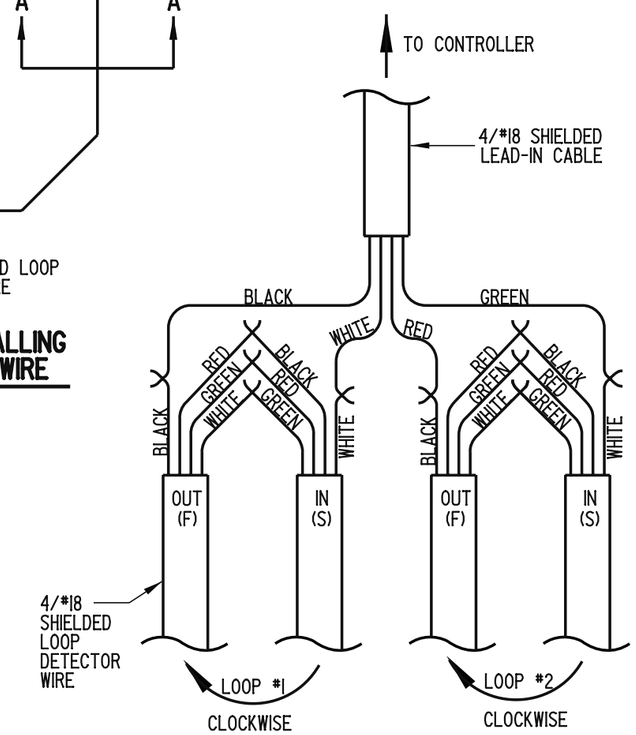

SPLICING DETAIL

(SEE NOTE 3)

NOTES:

1). SAW CUTS FOR WIRE SLOT CONSTRUCTION SHALL BE EXTENDED BEYOND THE CORNERS SO THAT THE SLOT IS FULL DEPTH AT TURN POINTS. A FORTY-FIVE (45) DEGREE ANGLE SHALL BE CUT 12" (300) BACK FROM THE POINT OF THE EXTENDED CORNER.

2). THE LONGITUDINAL / TRANSVERSE CUT SHALL BE STOPPED APPROXIMATELY 2" (50) FROM THE CORNER TO PREVENT THE TRIANGULAR PORTION OF THE PAVEMENT FROM BREAKING.

3). A MAXIMUM OF TWO LOOP DETECTORS CAN BE SPLICED TO ONE LEAD-IN CABLE, THE DETAIL ILLUSTRATES THE METHOD OF SPLICING TWO LOOP DETECTORS (LOOP #1 AND LOOP #2) TO A LEAD-IN CABLE.

4). LOOP DETECTOR SHALL BE CENTERED IN TRAVEL LANE.

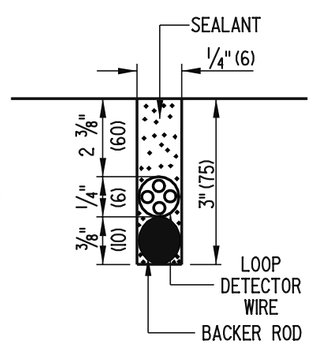

SECTION A - A

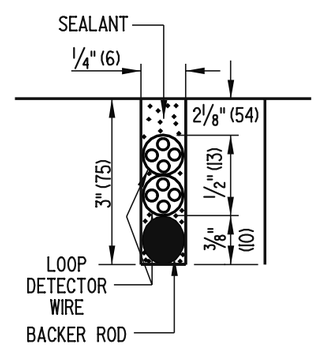

SECTION B - B

DELAWARE DEPARTMENT OF TRANSPORTATION	TYPE #1 LOOP DETECTOR		APPROVED Carolann Wicks (CHIEF ENGINEER) 12/5/05 (DATE)
	STANDARD NO. T-9 (2005)	SHT. 1 OF 1	RECOMMENDED (DESIGN ENGINEER) 11/29/05 (DATE)

01/19/2006

SCALE : N.T.S.

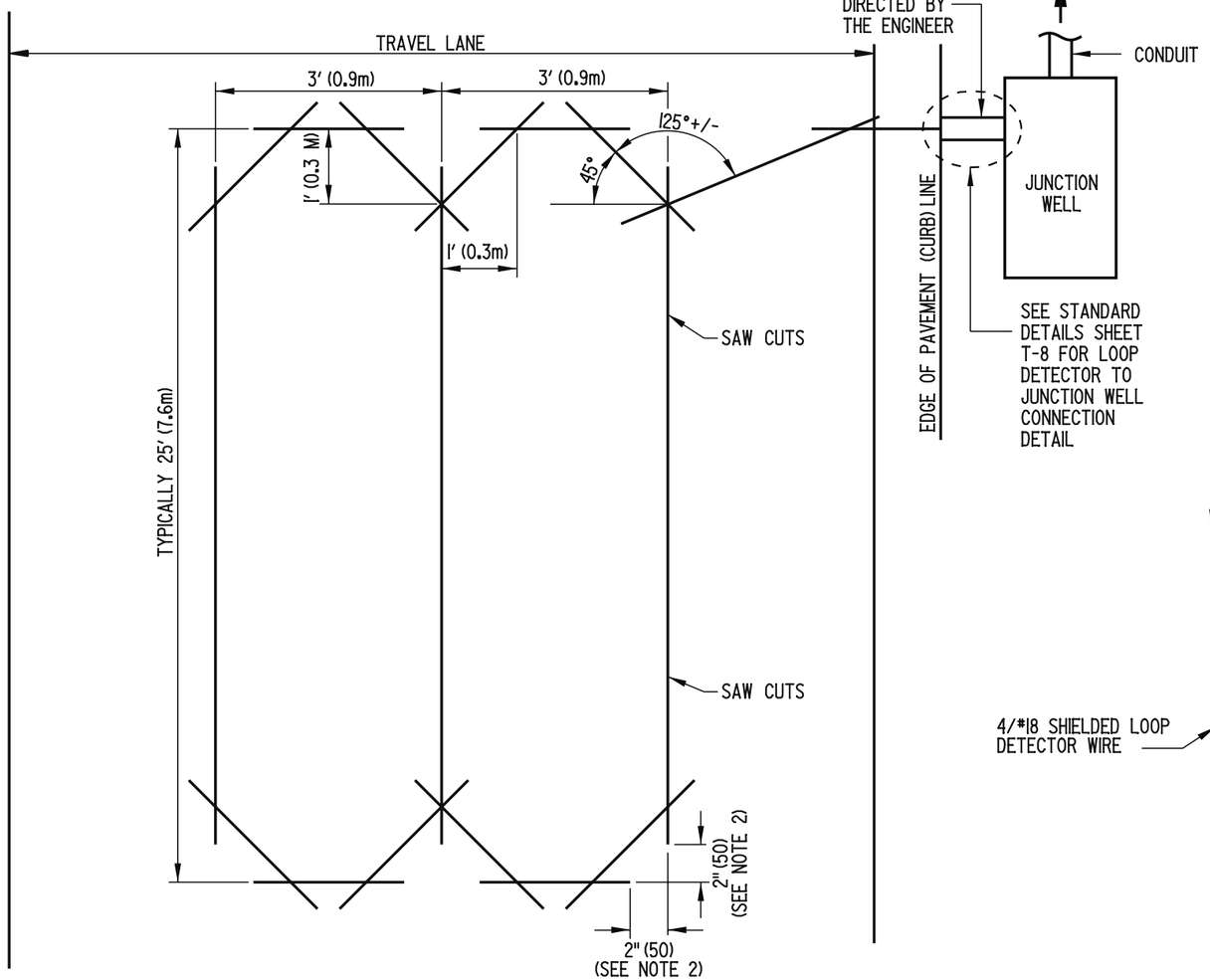

WIRE SLOT CONSTRUCTION

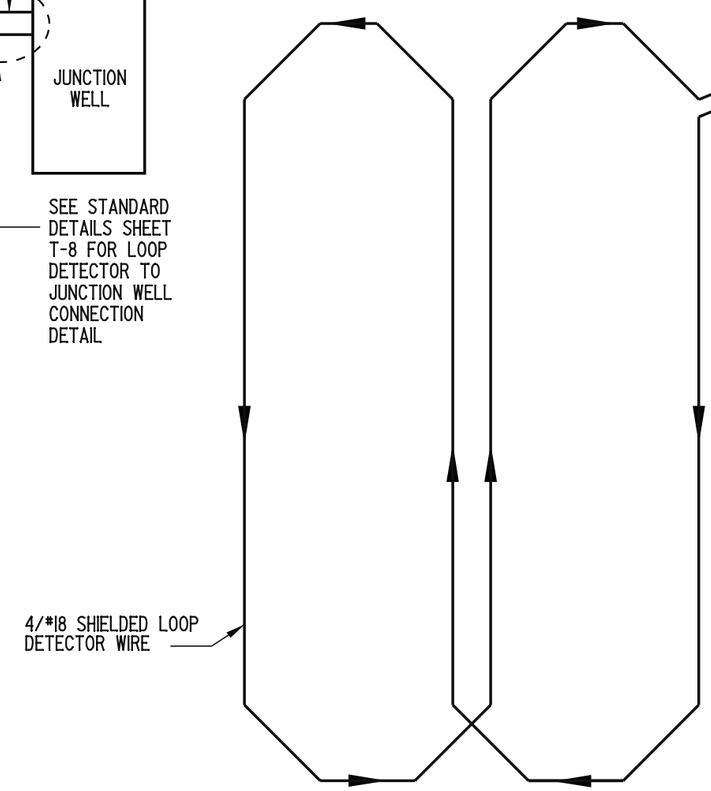

DETAILS FOR INSTALLING LOOP DETECTOR WIRE

(SINGLE WRAP)

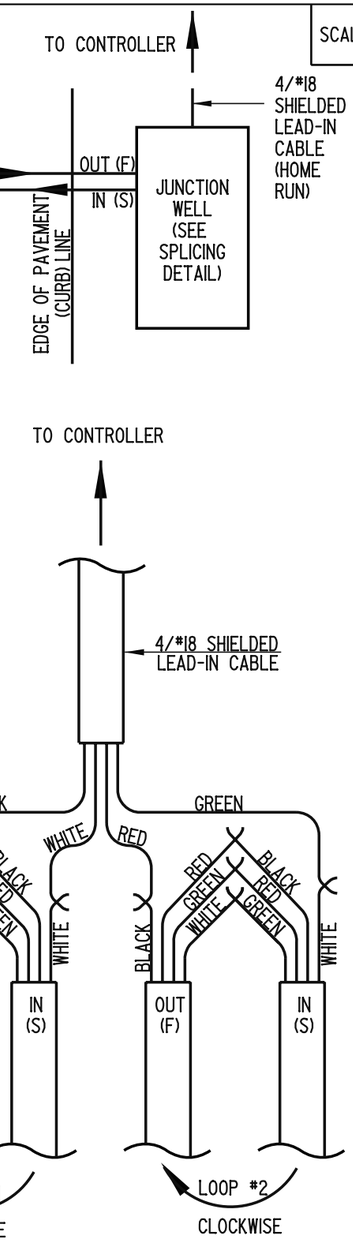

SPLICING DETAIL

(SEE NOTE 3)

NOTES:

1). SAW CUTS FOR WIRE SLOT CONSTRUCTION SHALL BE EXTENDED BEYOND THE CORNERS SO THAT THE SLOT IS FULL DEPTH AT TURN POINTS. A FORTY-FIVE (45) DEGREE ANGLE SHALL BE CUT 1' (0.3m) BACK FROM THE POINT OF THE EXTENDED CORNER.

2). THE LONGITUDINAL / TRANSVERSE CUT SHALL BE STOPPED APPROXIMATELY 2" (50) FROM THE CORNER TO PREVENT THE TRIANGULAR PORTION OF THE PAVEMENT FROM BREAKING.

3). A MAXIMUM OF TWO LOOP DETECTORS CAN BE SPLICED TO ONE LEAD-IN CABLE. THE DETAIL ILLUSTRATES THE METHOD OF SPLICING TWO LOOP DETECTORS (LOOP #1 AND LOOP #2) TO A LEAD-IN CABLE.

4). LOOP DETECTOR SHALL BE CENTERED IN TRAVEL LANE.

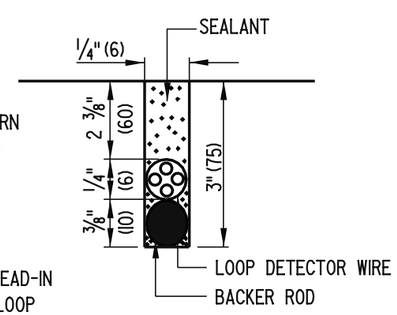

SECTION A - A

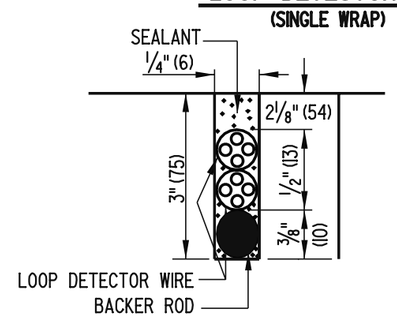

SECTION B - B

DELAWARE DEPARTMENT OF TRANSPORTATION	TYPE #2 LOOP DETECTOR		APPROVED Carolann Wicks (CHIEF ENGINEER) 12/5/05 (DATE)
	STANDARD NO. T-10 (2005)	SHT. 1 OF 1	RECOMMENDED (DESIGN ENGINEER) 11/29/05 (DATE)

01/19/2006

SCALE : N.T.S.

INTERMEDIATE

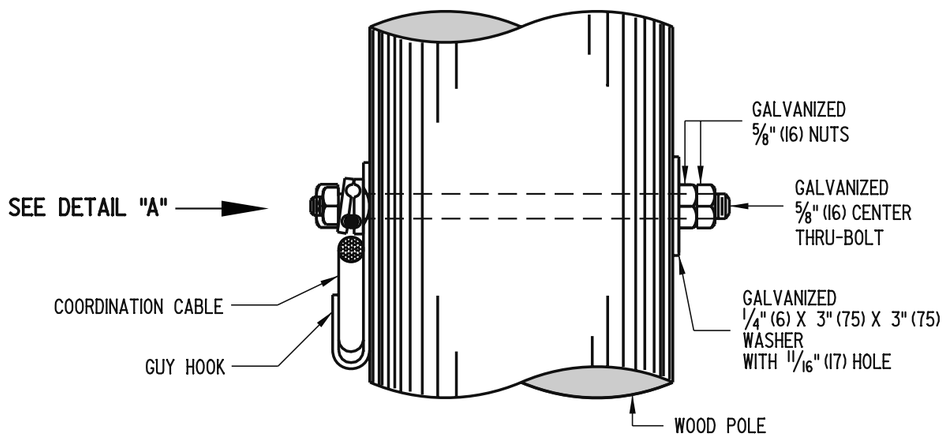

SIDE VIEW

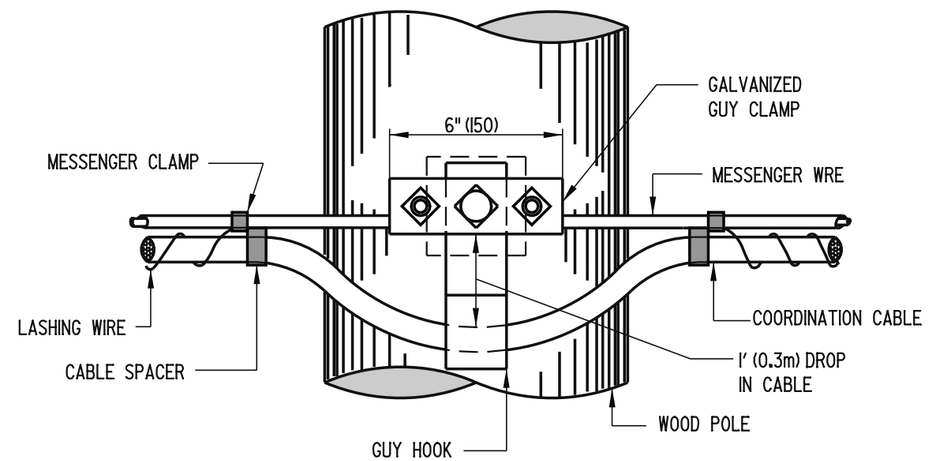

FRONT VIEW

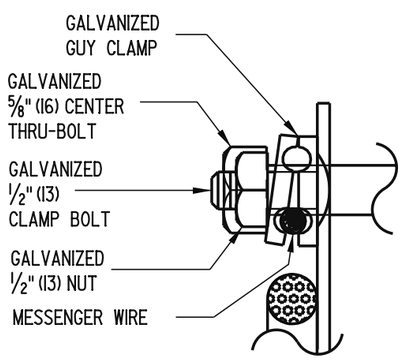

DETAIL "A"

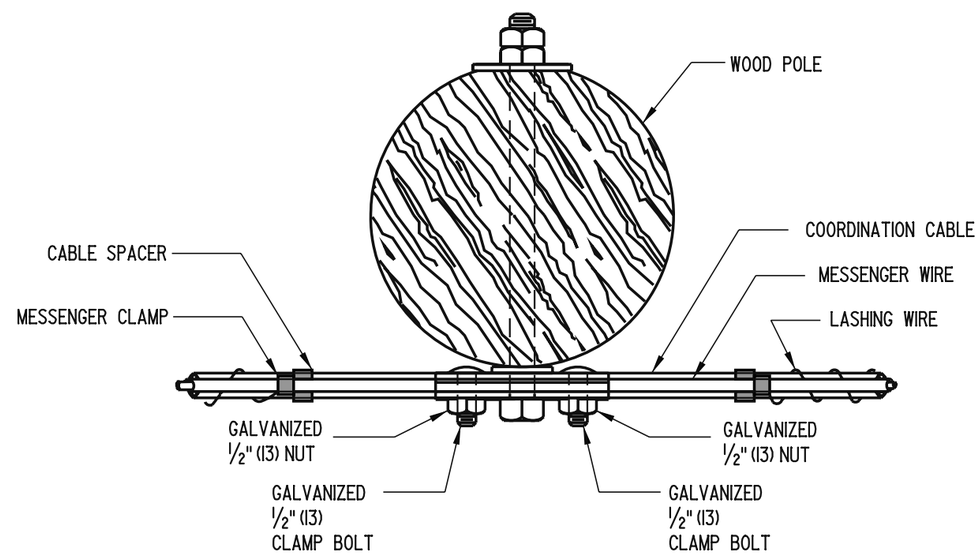

TOP VIEW

DELAWARE DEPARTMENT OF TRANSPORTATION	INTERMEDIATE MESSENGER WIRE ATTACHMENT ON WOOD POLES		APPROVED Carolann Wicks CHIEF ENGINEER — 12/5/05 DATE
	STANDARD NO. T-11 (2005)	SHT. 1 OF 2	RECOMMENDED [illegible] DESIGN ENGINEER — 11/29/05 DATE

09/09/2005

SCALE : N.T.S.

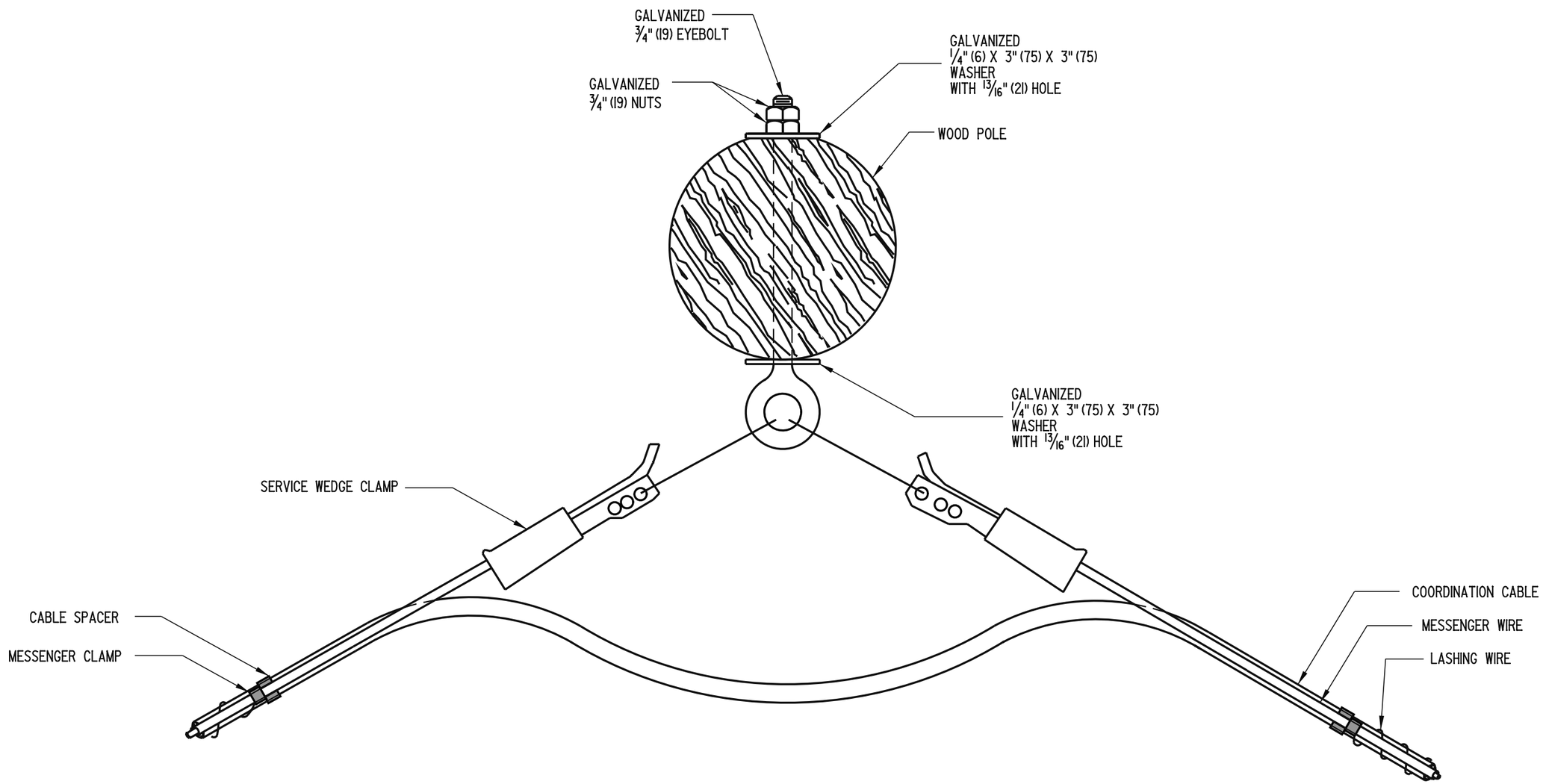

TOP VIEW

DELAWARE DEPARTMENT OF TRANSPORTATION	ANGULAR INTERMEDIATE MESSENGER WIRE ATTACHMENT		APPROVED Carolann Wicks CHIEF ENGINEER — 12/5/05 DATE
	STANDARD NO. T-11 (2005)	SHT. 2 OF 2	RECOMMENDED DESIGN ENGINEER — 11/29/05 DATE

09/27/2004

SCALE : N.T.S.

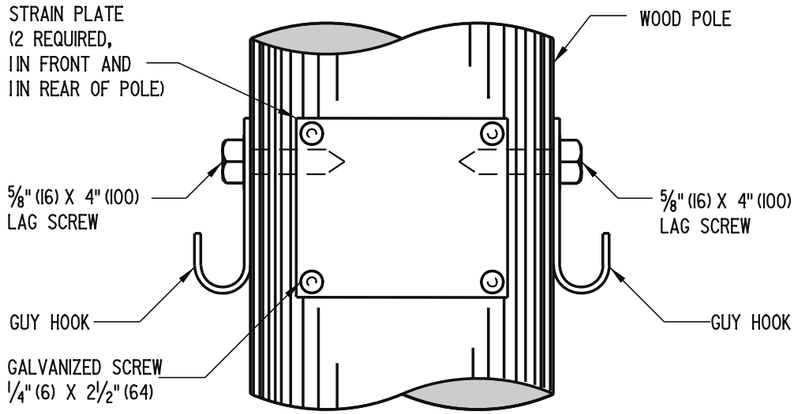

FRONT VIEW
(SPAN WIRE NOT SHOWN)

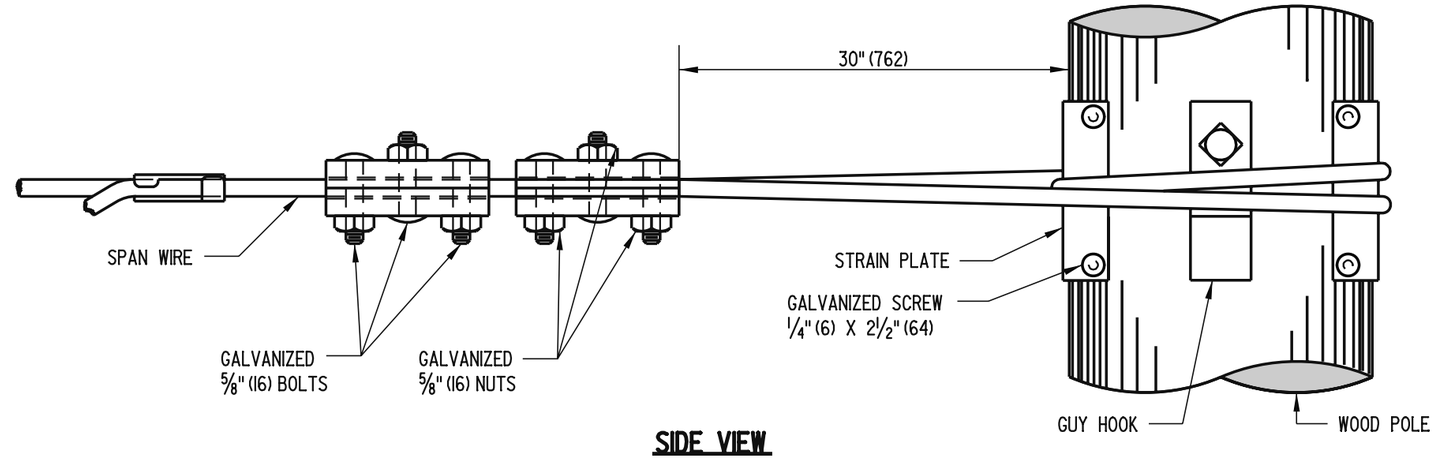

SIDE VIEW

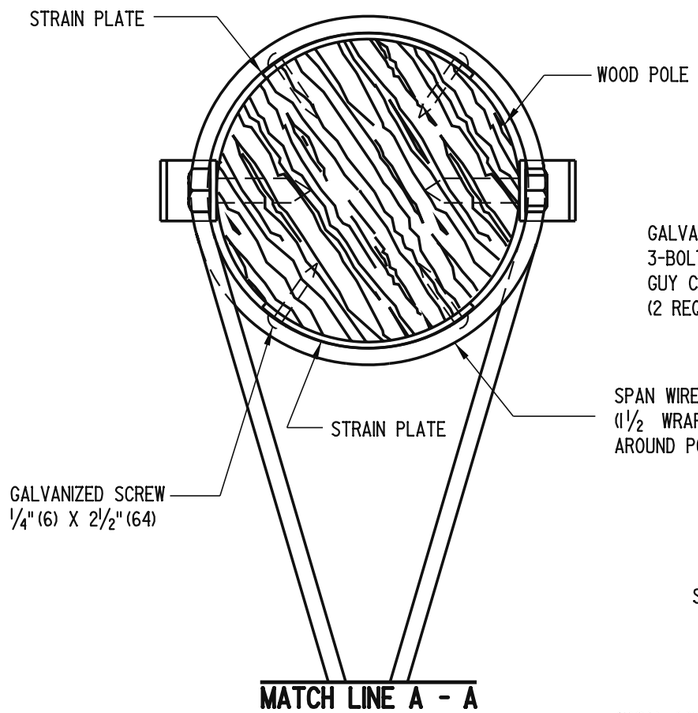

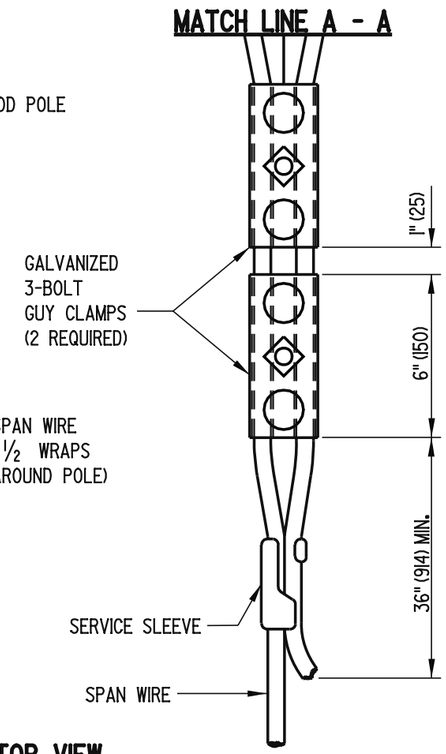

TOP VIEW

NOTE: SPAN WIRE ATTACHMENT BETWEEN METAL POLES IS THE SAME AS SHOWN FOR WOOD POLES EXCEPT THAT THE STRAIN PLATES AND GUY HOOKS ARE NOT USED. FOR DETAIL SEE T-14 SHEET 2 - "DEAD END MESSENGER WIRE ATTACHMENT, METAL POLES ".

DELAWARE DEPARTMENT OF TRANSPORTATION	SPAN WIRE ATTACHMENT BETWEEN POLES		APPROVED Carolann Wicks CHIEF ENGINEER — DATE 12/5/05
	STANDARD NO. T-12 (2005)	SHT. 1 OF 2	RECOMMENDED [illegible] DESIGN ENGINEER — DATE 11/29/05

09/09/2005

SCALE : N.T.S.

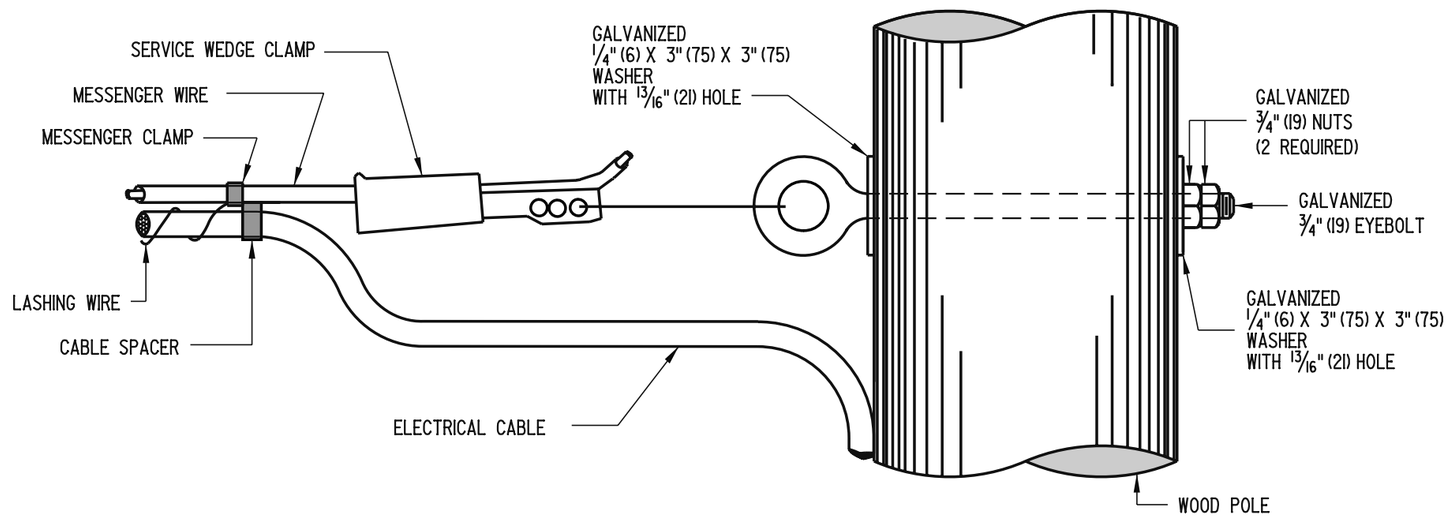

WOOD POLES

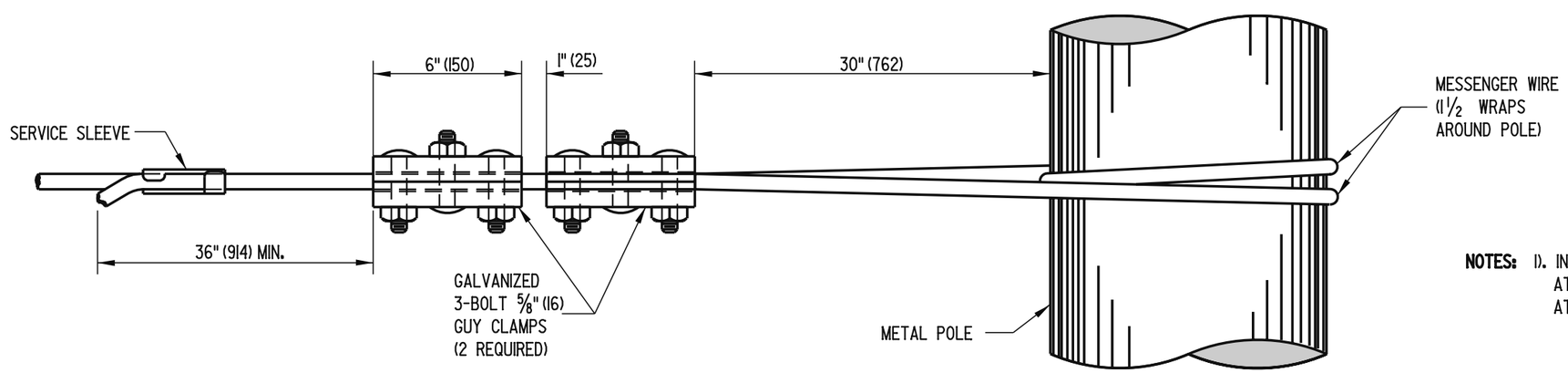

NOTES: 1). INSTALLATION METHOD SHOWN FOR DEAD END MESSENGER WIRE ATTACHMENT TO METAL POLES SHALL BE USED FOR SPAN WIRE ATTACHMENT BETWEEN METAL POLES.

METAL POLES

DELAWARE DEPARTMENT OF TRANSPORTATION	DEAD END MESSENGER WIRE ATTACHMENT		APPROVED Carolann Wicks CHIEF ENGINEER 12/5/05 DATE
	STANDARD NO. T-12 (2005)	SHT. 2 OF 2	RECOMMENDED [signature] DESIGN ENGINEER 11/29/05 DATE

09/09/2005

SCALE : N.T.S.

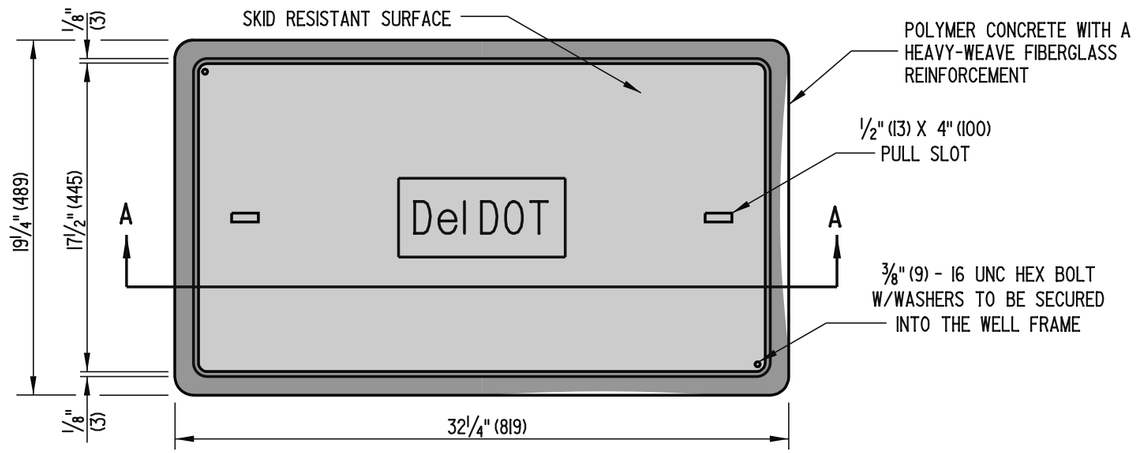

PLAN VIEW

NOTES:

1). TYPE 6 CONDUIT JUNCTION WELL SHALL BE PRECAST POLYMER CONCRETE.

2). ALL CONDUIT JUNCTION WELLS CONSTRUCTED WITHIN PAVEMENT, SIDEWALKS, ETC. WILL BE CONSTRUCTED FLUSH WITH THE SURFACE OF THE SAME. INSTALLATION IN UNPAVED AREAS WILL BE CONSTRUCTED ABOVE GRADE AND GRADED TO DRAIN AWAY FROM THE CONDUIT JUNCTION WELL.

3). POLYMER CONCRETE COVERS SHALL BE THE HEAVY-DUTY TYPE WITH A DESIGN LOAD OF 15,000 LBS (6800 kg) OVER A 10" (255) SQUARE.

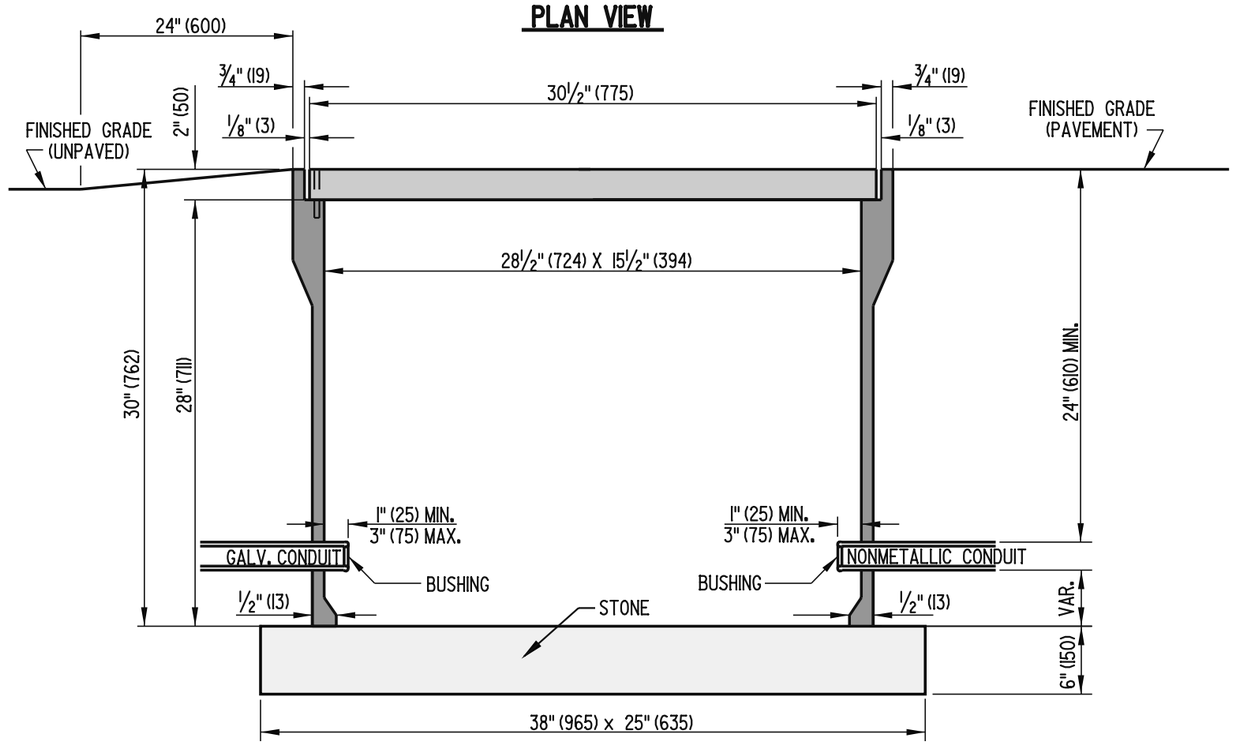

SECTION A-A

DELAWARE DEPARTMENT OF TRANSPORTATION	CONDUIT JUNCTION WELL, TYPE 6		APPROVED Carolann Wicks CHIEF ENGINEER — DATE 12/5/05
	STANDARD NO. T-13 (2005)	SHT. 1 OF 3	RECOMMENDED [signature] DESIGN ENGINEER — DATE 11/29/05

01/19/2006

SCALE : N.T.S.

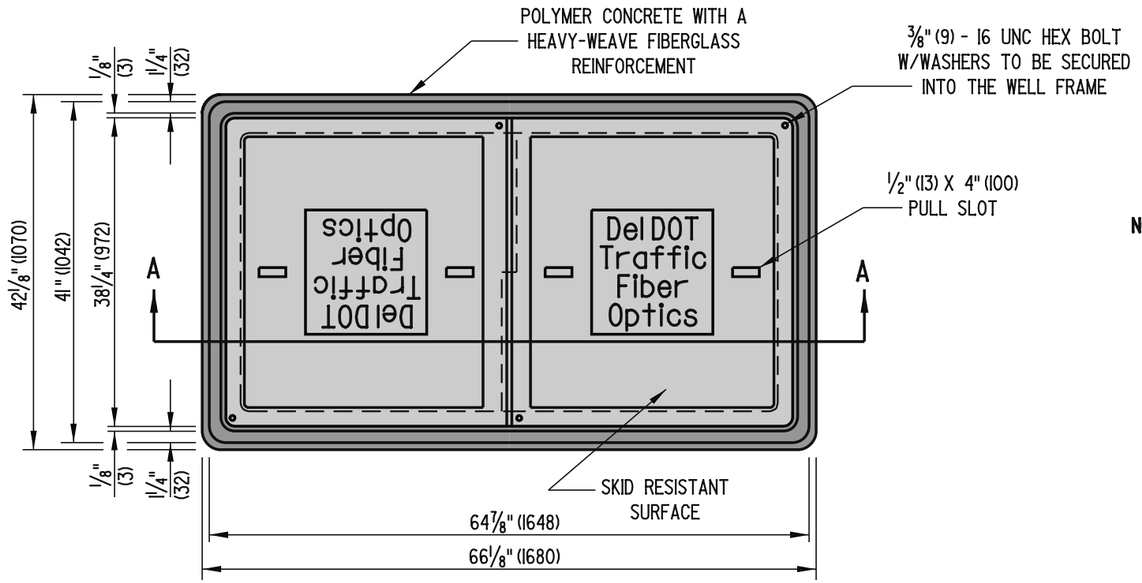

PLAN VIEW

NOTES:

1). TYPE 7 CONDUIT JUNCTION WELL SHALL BE PRECAST POLYMER CONCRETE.

2). ALL CONDUIT JUNCTION WELLS CONSTRUCTED WITHIN PAVEMENT, SIDEWALKS, ETC. WILL BE CONSTRUCTED FLUSH WITH THE SURFACE OF THE SAME. INSTALLATION IN UNPAVED AREAS WILL BE CONSTRUCTED ABOVE GRADE AND GRADED TO DRAIN AWAY FROM THE CONDUIT JUNCTION WELL.

3). POLYMER CONCRETE COVERS SHALL BE THE HEAVY DUTY TYPE WITH A DESIGN LOAD OF 15,000 LBS (6800 kg) OVER A 10" (255) SQUARE.

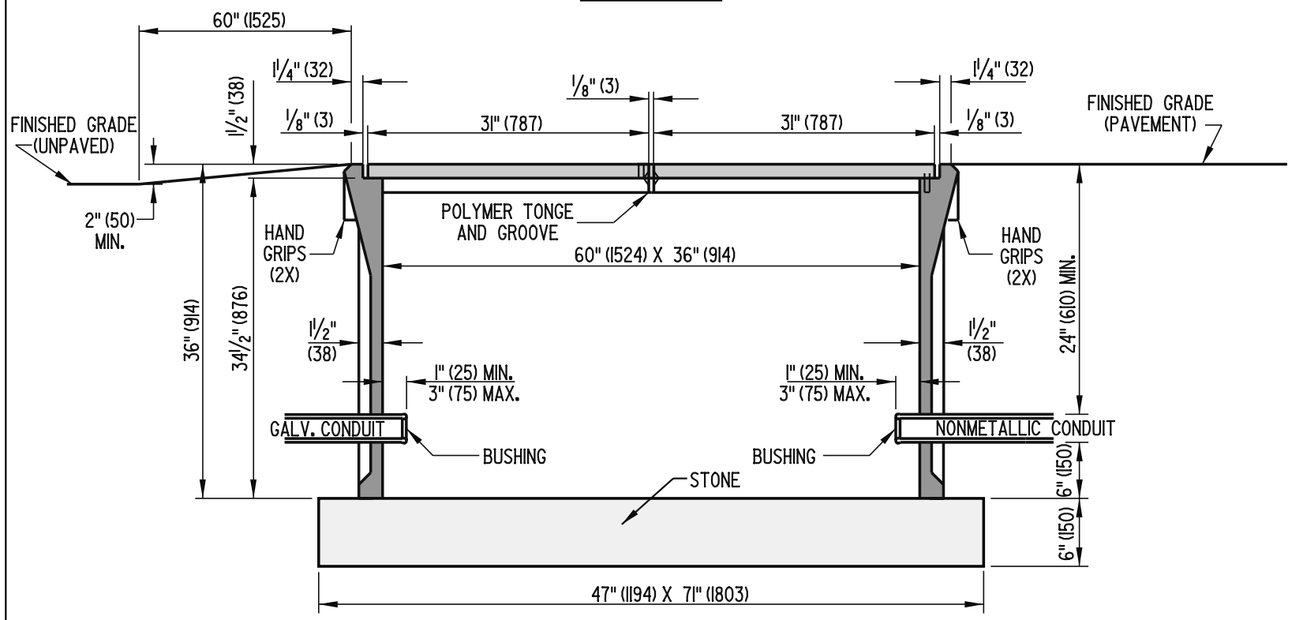

SECTION A-A

DELAWARE DEPARTMENT OF TRANSPORTATION	CONDUIT JUNCTION WELL, TYPE 7		APPROVED CHIEF ENGINEER — DATE 10/10/06
	STANDARD NO. T-13 (2006)	SHT. 2 OF 3	RECOMMENDED DESIGN ENGINEER — DATE 10/3/06

05/13/2006

SCALE : N.T.S.

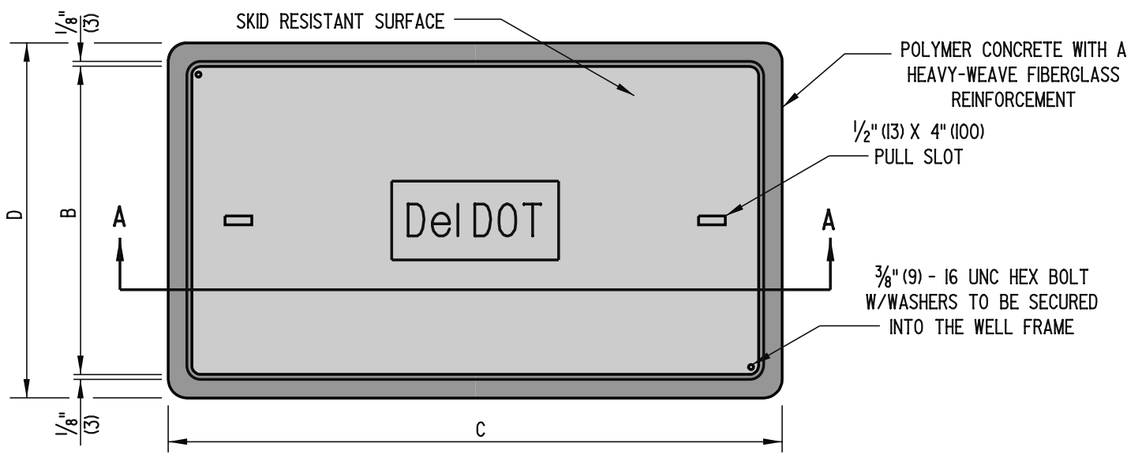

PLAN VIEW

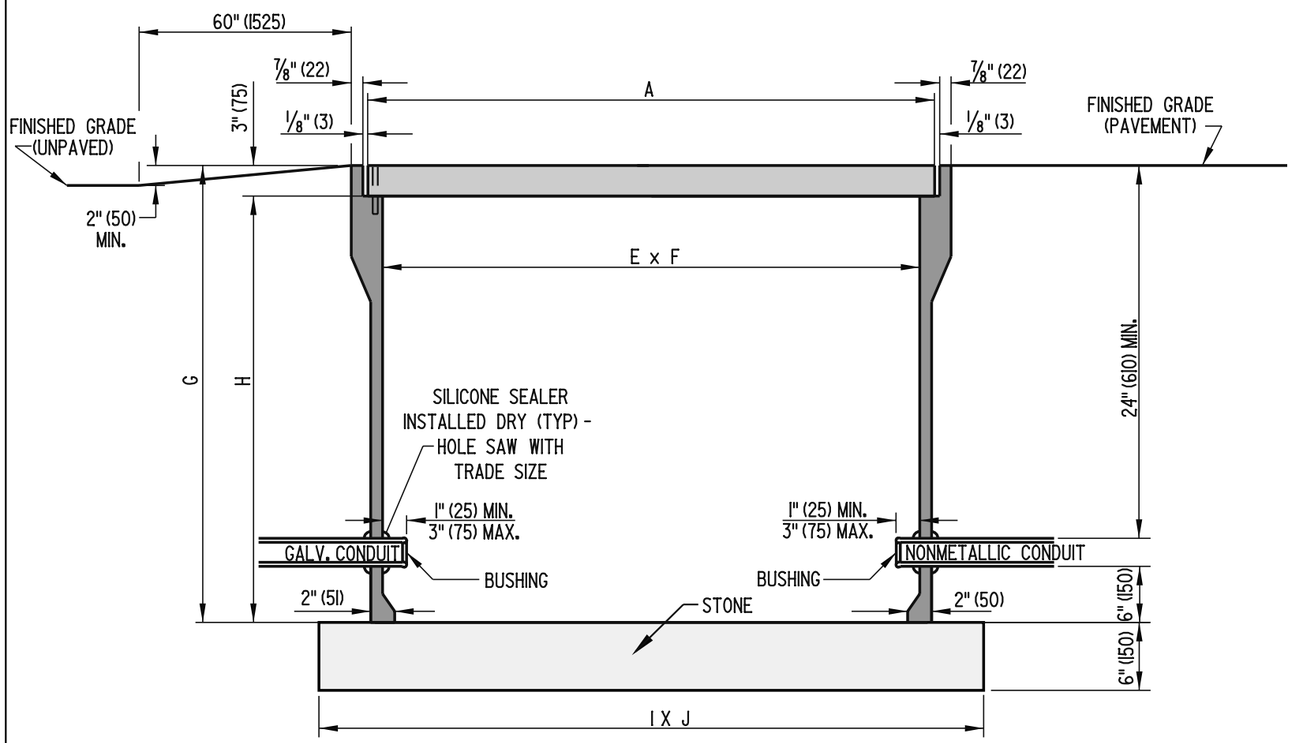

SECTION A-A

NOTES:

1). TYPES 8 & 10 CONDUIT JUNCTION WELLS SHALL BE PRECAST POLYMER CONCRETE.

2). ALL CONDUIT JUNCTION WELLS CONSTRUCTED WITHIN PAVEMENT, SIDEWALKS, ETC. WILL BE CONSTRUCTED FLUSH WITH THE SURFACE OF THE SAME. INSTALLATION IN UNPAVED AREAS WILL BE CONSTRUCTED ABOVE GRADE AND GRADED TO DRAIN AWAY FROM THE CONDUIT JUNCTION WELL.

3). POLYMER CONCRETE COVERS SHALL BE THE HEAVY-DUTY TYPE WITH A DESIGN LOAD OF 15,000 LBS (6800 kg) OVER A 10" (255) SQUARE.

DIMENSIONS		TYPE 8	TYPE 10
COVER	A	47 5/8" (1210)	35 5/8" (905)
	B	30 1/8" (765)	24" (610)
FRAME	C	49 5/8" (1261)	37 5/8" (956)
	D	32 1/8" (816)	26" (660)
	E	45 5/8" (1159)	33 7/8" (860)
	F	28 1/8" (714)	22 1/4" (565)
	G	36" (914)	30" (1067)
	H	33" (838)	27" (991)
BASE	I	58" (1473)	46" (1168)
	J	40" (1016)	34" (864)

DELAWARE DEPARTMENT OF TRANSPORTATION

CONDUIT JUNCTION WELLS, TYPES 8 & 10

STANDARD NO. T-13 (2006) SHT. 3 OF 3

APPROVED CHIEF ENGINEER DATE 10/10/06

RECOMMENDED DESIGN ENGINEER DATE 10/3/06

05/13/2006

SCALE : N.T.S.

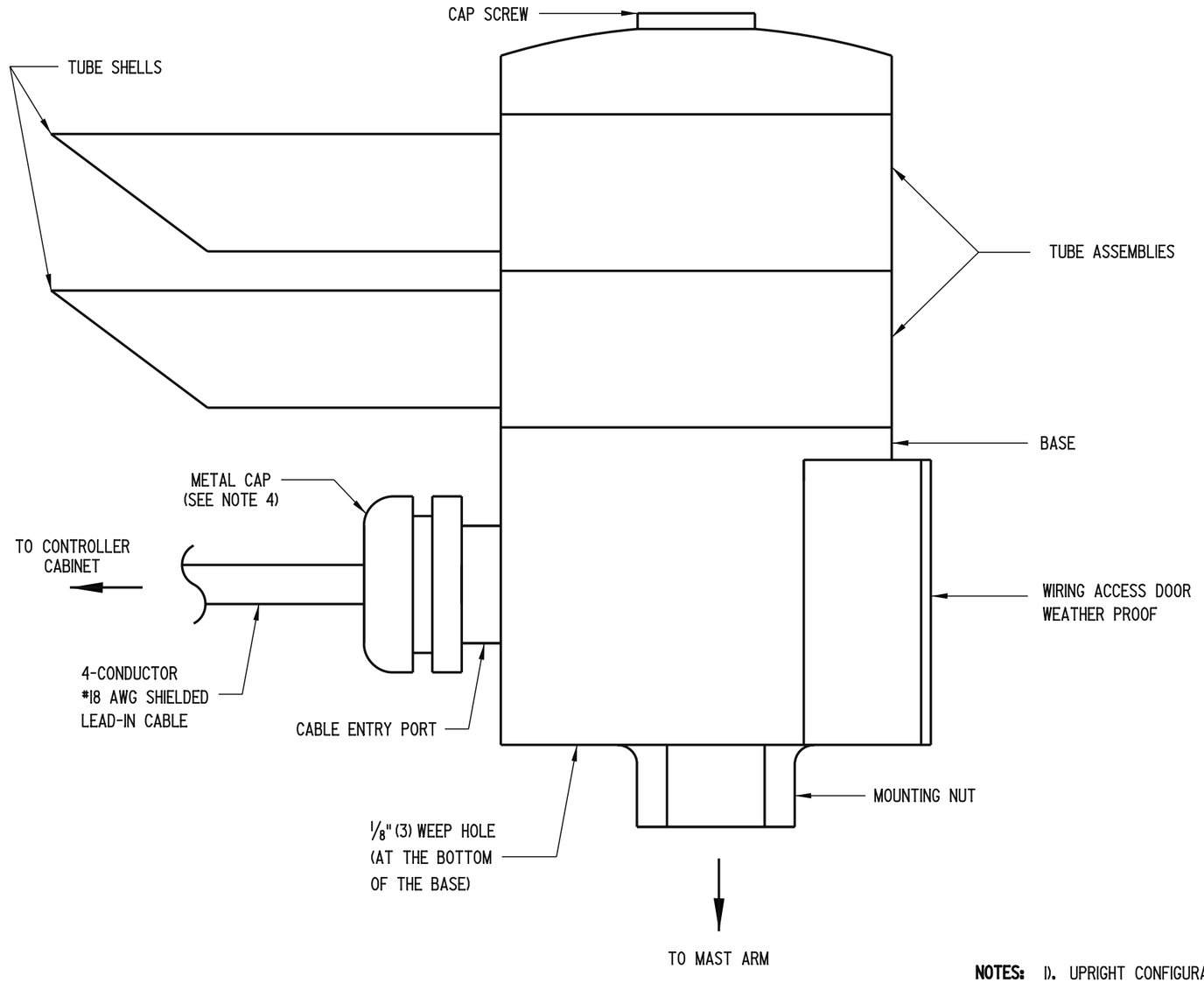

SIDE VIEW

CABLE CONNECTIONS TO TERMINAL STRIP

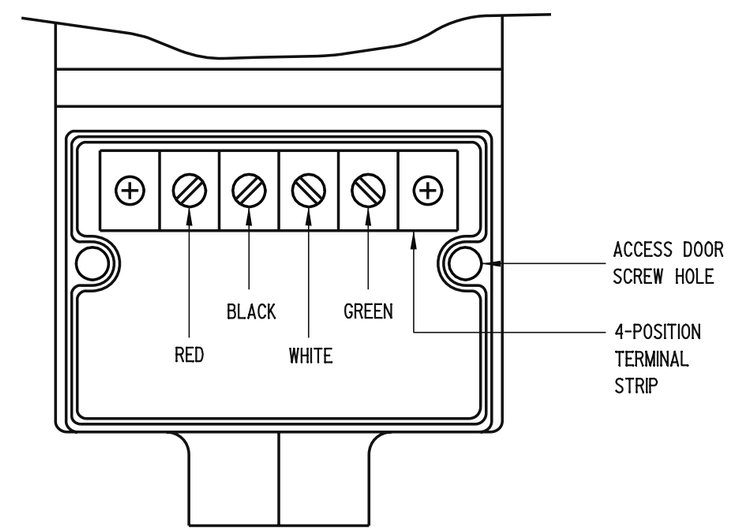

FRONT VIEW
(CABLE IS NOT SHOWN)

NOTES:
1). UPRIGHT CONFIGURATION SHALL BE USED FOR MOUNTING ON MAST ARMS, SIGNAL HEAD FRAMEWORKS AND PEDESTALS.
2). UPRIGHT MOUNTING HARDWARE SHALL BE SUPPLIED BY THE DEPARTMENT.
3). TEFLON TAPE SHALL BE APPLIED TO THREADS BEFORE MOUNTING.
4). ROUTE THE LEAD-IN CABLE THROUGH THE METAL CAP AND THE RUBBER PLUG. REPLACE THE METAL CAP, SEALING THE CABLE ENTRY PORT. TIGHTEN THE METAL CAP SO THE CABLE WILL NOT SLIDE THROUGH THE RUBBER PLUG.

DELAWARE DEPARTMENT OF TRANSPORTATION	EMERGENCY PREEMPTION RECEIVER, UPRIGHT MOUNT	APPROVED CHIEF ENGINEER	DATE 10/10/06
	STANDARD NO. T-14 (2006) SHT. 1 OF 2	RECOMMENDED DESIGN ENGINEER	DATE 10/3/06

06/27/2006

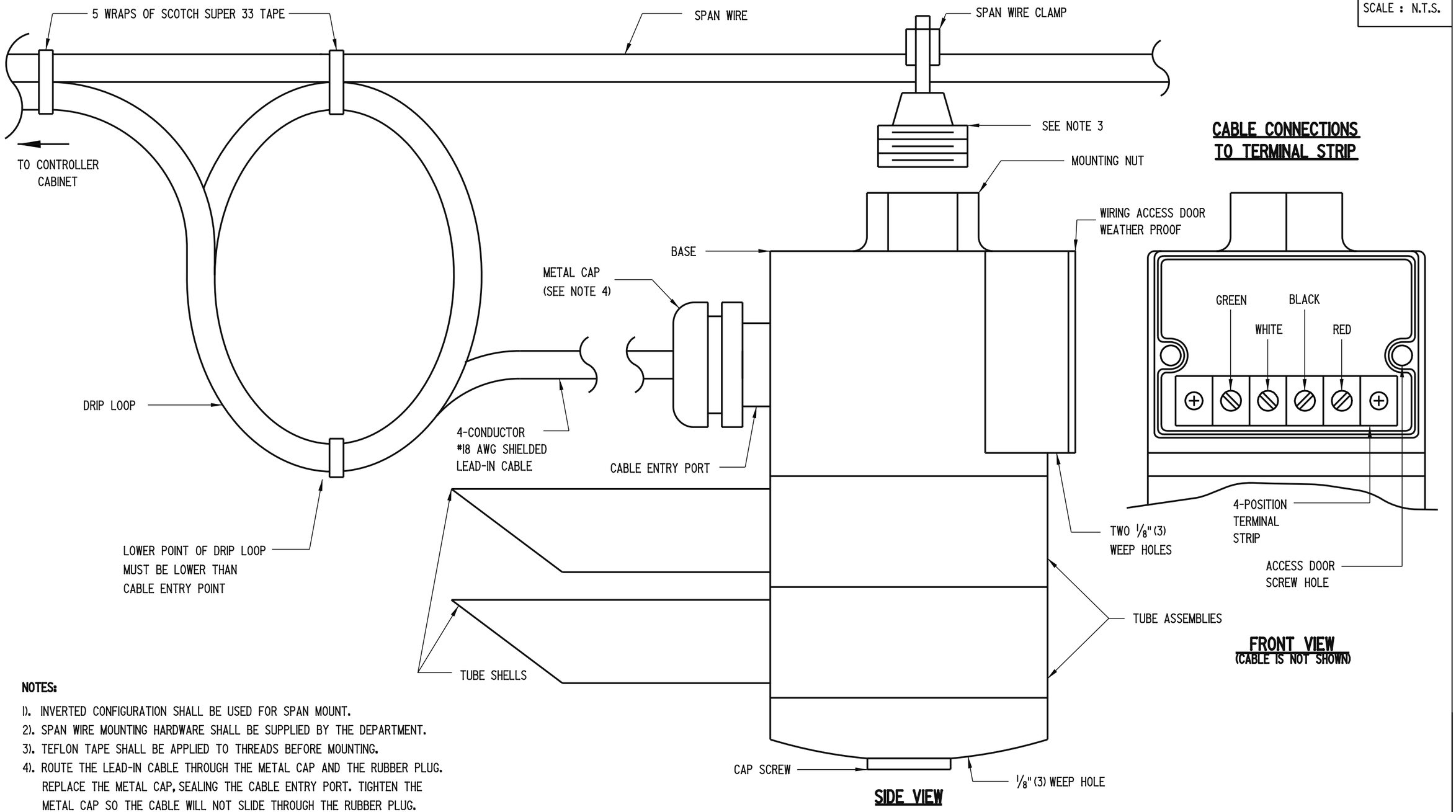

NOTES:

1). INVERTED CONFIGURATION SHALL BE USED FOR SPAN MOUNT.
2). SPAN WIRE MOUNTING HARDWARE SHALL BE SUPPLIED BY THE DEPARTMENT.
3). TEFLON TAPE SHALL BE APPLIED TO THREADS BEFORE MOUNTING.
4). ROUTE THE LEAD-IN CABLE THROUGH THE METAL CAP AND THE RUBBER PLUG. REPLACE THE METAL CAP, SEALING THE CABLE ENTRY PORT. TIGHTEN THE METAL CAP SO THE CABLE WILL NOT SLIDE THROUGH THE RUBBER PLUG.

DELAWARE DEPARTMENT OF TRANSPORTATION	EMERGENCY PREEMPTION RECEIVER, INVERTED MOUNT		APPROVED Carolann Wicks CHIEF ENGINEER 12/5/05 DATE
	STANDARD NO. T-14 (2005)	SHT. 2 OF 2	RECOMMENDED [signature] DESIGN ENGINEER 11/29/05 DATE

09/09/2005