THE STATE OF DELAWARE
DEPARTMENT OF TRANSPORTATION

U.S. CUSTOMARY UNITS

CONSTRUCTION PLANS FOR:

SR1 / I-95 INTERCHANGE - CHRISTIANA MALL ROAD BRIDGE

CONTRACT NUMBER: T201009004
FEDERAL AID PROJECT NUMBER: STP-2010(39)

COUNTY: NEW CASTLE M.R. #: 67

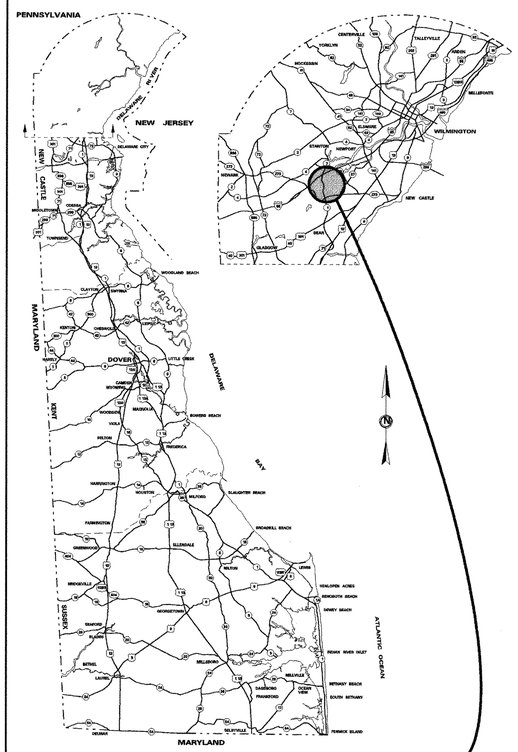

GENERAL LOCATION OF CONTRACT

LIMIT OF CONSTRUCTION CONTRACT T201009004 STATION 1332 + 40

BRIDGES 1-716, 1-716A, AND 1-717 REHABILITATION

LIMIT OF CONSTRUCTION CONTRACT T201009004 STATION 1515 + 50

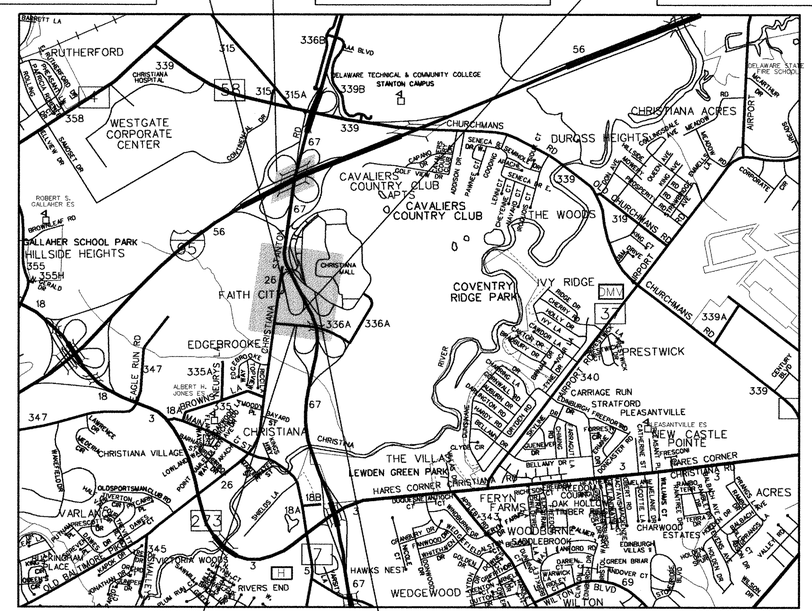

LIMIT OF CONSTRUCTION CONTRACT T201009004 STATION 1340 + 83

LIMIT OF CONSTRUCTION CONTRACT T201009004 STATION 100 + 00

DESIGN DESIGNATION

FUNCTIONAL CLASS: URBAN PRINCIPLE ARTERIAL		D.H.V. PROJECTED: 9,410	YEAR: 2030
TYPE OF CONSTRUCTION: RECONSTRUCTION		DESIGN SPEED: VARIES, SEE SHEET 5	
A.A.D.T. CURRENT: 92,700	YEAR: 2008	TRUCKS: 9%	
A.A.D.T. PROJECTED: 126,175	YEAR: 2030	DIRECTION OF DISTRIBUTION: 59%	

INDEX OF SHEETS

SHEET Nº	TABLE OF CONTENTS
1	TITLE
2	PLAN SHEET INDEX
3	LEGEND
4-5	NOTES
6-11	TYPICAL SECTIONS
12-15	HORIZONTAL AND VERTICAL CONTROL
16-19	CONSTRUCTION PLANS
20-23	PROFILES
24-26	DRAINAGE PLANS
27-29	GRADES AND GEOMETRICS
30-35	CONSTRUCTION DETAILS
36-39	BRIDGE PLAN AND ELEVATION
40-48	BRIDGE ABUTMENT PLANS
49-52	BRIDGE WINGWALL PLANS
53-55	BRIDGE ABUTMENT REINFORCING
56-59	BRIDGE PIER PLANS
60	BRIDGE BEARING DETAILS
61	BRIDGE FRAMING PLANS
62	BRIDGE CAMBER TABLE
63-64	BRIDGE MISCELLANEOUS DETAILS
65-69	BRIDGE DECK PLAN
70-75	BRIDGE APPROACH SLAB PLANS
76-79	BRIDGE BORING LOGS
80	RETAINING WALL DETAILS
81-98	REHABILITATION DETAILS FOR BRIDGES 1-716, 1-716A AND 1-717
99-111	STORMWATER MANAGEMENT PLANS
112-115	ENVIRONMENTAL COMPLIANCE PLANS
116-124	CONSTRUCTION PHASING, MOT AND EROSION CONTROL PLANS
125-127	DETOUR PLANS
128-138	LIGHTING PLANS
139-141	UTILITY RELOCATION PLANS
142-145	SIGNING, STRIPING AND CONDUIT PLANS
146-148	SIGNALIZATION PLANS
149-164	SOIL BORING PLANS

TOTAL SHEETS: 164

APPROVED DESIGN EXCEPTIONS

DESIGN PARAMETER	REQUIRED	PROVIDED	DATE

ADDENDA & REVISIONS

DESCRIPTION	NAME & DATE

ASSOCIATED CONTRACTS

CONTRACT NO.	CONTRACT NAME
T200809003	S.R. 1 / I-95 INTERCHANGE

PREPARED BY
THE CONSULTING FIRM OF RUMMEL, KLEPPER & KAHL, LLP

THOMAS E. MOHLER REGISTERED No. 14234 DELAWARE PROFESSIONAL ENGINEER
SEAL

RECOMMENDED — DATE 8/17/10

RECOMMENDED

SQUAD MANAGER, CONSTRUCTION — DATE 8/23/2010

GROUP ENGINEER, CONSTRUCTION — DATE 8-23-10

ASSISTANT DIRECTOR, TRANSPORTATION SOLUTIONS (CONSTRUCTION) — DATE 8-23-2010

RECOMMENDED

STORMWATER ENGINEER — DATE 31 AUG 2010

VINCENT W. DAVIS REGISTERED No. 12898 DELAWARE PROFESSIONAL ENGINEER
SEAL

~~**RECOMMENDED**~~

~~SQUAD MANAGER, TRANSPORTATION SOLUTIONS (PROJECT DEVELOPMENT OR BRIDGE DESIGN)~~ — DATE

SEAL

RECOMMENDED

BRIDGE DESIGN ENGINEER — DATE Aug. 31st, 2010

JITEN K. SONAGI REGISTERED NO. 9907 DELAWARE PROFESSIONAL ENGINEER
SEAL

RECOMMENDED

GROUP ENGINEER, PROJECT DEVELOPMENT — DATE August 20, 2010

DARREN M. O'NEILL REGISTERED No. 10857 DELAWARE PROFESSIONAL ENGINEER
SEAL

RECOMMENDED

ASSISTANT DIRECTOR, TRANSPORTATION SOLUTIONS — DATE 8/20/10

DREW A. BOYCE REGISTERED DELAWARE PROFESSIONAL ENGINEER
SEAL

APPROVED

CHIEF ENGINEER — DATE August 31, 2010

SEAL

8/10/2010 6:54:39 PM
M:\PROJECTS\2003\03059_DELTRNPK\SRMALL\CADD\3009004\PLANS\T001_RAMPRIDGN

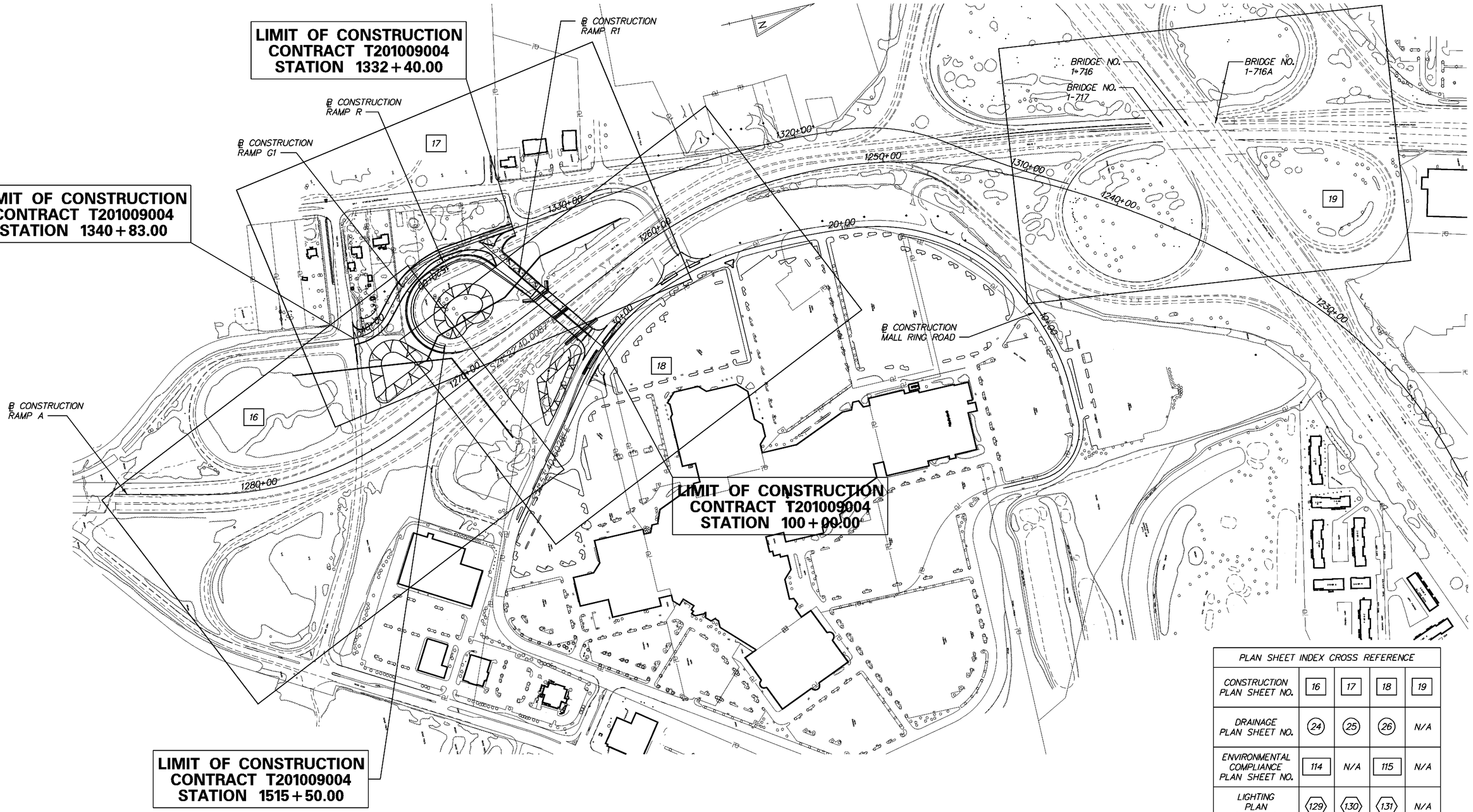

PROFILE SHEET INDEX	
ROADWAY ALIGNMENT	SHEET NO.'S
RAMP G1	20
RAMP R	21-22
RAMP R1	23

PLAN SHEET INDEX CROSS REFERENCE				
CONSTRUCTION PLAN SHEET NO.	16	17	18	19
DRAINAGE PLAN SHEET NO.	24	25	26	N/A
ENVIRONMENTAL COMPLIANCE PLAN SHEET NO.	114	N/A	115	N/A
LIGHTING PLAN SHEET NO.	129	130	131	N/A
UTILITY RELOCATION PLAN SHEET NO.	139	140	141	N/A
SIGNING, STRIPING AND CONDUIT PLAN SHEET NO.	142	143	144	N/A

9/15/2010 11:52:29 AM
M:\projects\2003\03059_deltrnpk\SR1Mall\Cadd\3009004\Plans\ls01_RampR1.dgn

DELAWARE
DEPARTMENT OF TRANSPORTATION

ADDENDUMS / REVISIONS

SCALE
0 200 400 600
FEET

SR1/I-95 INTERCHANGE -
CHRISTIANA MALL
ROAD BRIDGE

CONTRACT	BRIDGE NO.	1-223
T201009004	DESIGNED BY: SJS	
COUNTY	CHECKED BY: CDW	
NEW CASTLE		

PLAN SHEET INDEX

SHEET NO. 2
TOTAL SHTS. 164

EXISTING SYMBOLS

DRAINAGE	
	DITCH OR STREAM CENTERLINE
	DIRECTIONAL STREAM FLOW ARROW
C.B.	DRAINAGE CATCH BASIN
J.B.	DRAINAGE JUNCTION BOX
D	DRAINAGE MANHOLE
SIZE/TYPE LABEL	DRAINAGE PIPE AND FLOW ARROW
	DRAINAGE PIPE HEADWALL
	RIPRAP - AREA FEATURE
	RIPRAP - LINEAR FEATURE

MANMADE ROADSIDE FEATURES	
(TYPE LABEL)	CURB
(TYPE LABEL)	CURB AND GUTTER
	FENCE - CHAINLINK OR STRANDED
	FENCE - STOCKADE OR SPLIT RAIL
FP	FLAG POLE
	GUARDRAIL - STEEL BEAM
	GUARDRAIL - WIRE ROPE
LAMP	LAMP AND POST - RESIDENTIAL
MB	MAILBOX
PM	PARKING METER AND POST
	PAVEMENT - FLEXIBLE
	PAVEMENT - RIGID
	PILE - BRIDGE
	PILLAR OR MISCELLANEOUS POST
	TRAFFIC SIGN AND POST
	WALL - BRICK OR BLOCK
	WALL - STONE

NATURAL ROADSIDE FEATURES	
	GRASS LAWN
	HEDGEROW OR THICKET
	MARSH BOUNDARY LINE
	TREE - CONIFEROUS
	TREE - DECIDUOUS
	TREE STUMP
	SHRUBBERY
WL	DELINEATED WETLAND BOUNDARY LINE
	WOODS LINE BOUNDARY

SURVEY CONTROL & MONUMENTATION	
B.M.	SURVEY BENCHMARK LOCATION
T.P.	SURVEY TIE POINT LOCATION
	SURVEY TRAVERSE POINT
	POINT OF CURVATURE OR TANGENCY
	POINT OF INTERSECTING TANGENTS
C.M.	PROPERTY MARKER - CONCRETE MON.
I.P.	PROPERTY MARKER - IRON PIPE

UTILITY	
	SOIL BORING LOCATION
	UTILITY TEST HOLE LOCATION
TV	CABLE TV DISTRIBUTION BOX
E	ELECTRIC MANHOLE
E	ELECTRIC TRANSFORMER
	POLE MOUNTED LUMINAIRE
G	GAS MANHOLE
G.M.	GAS METER
G.V.	GAS VALVE
G.P.	GAS PUMP - SERVICE STATION
	RAILROAD TRACKS
S	SANITARY SEWER MANHOLE
S.V.	SANITARY SEWER VALVE
VENT	SANITARY SEWER VENT OR CLEANOUT
S.D.F.	SEPTIC DRAIN FIELD
B	TELEPHONE BOOTH
T	TELEPHONE MANHOLE
T	TELEPHONE TEST POINT
J.W.	TRAFFIC - CONDUIT JUNCTION WELL
	TRAFFIC - LIGHT POLE AND BASE
	TRAFFIC - PEDESTRIAN POLE & BASE
	TRAFFIC - SIGNAL CABINET & BASE
	TRAFFIC - SIGNAL POLE AND BASE
U	UTILITY BOX
	UTILITY POLE GUY WIRE ANCHOR
	UTILITY POLE
F.H.	WATER - FIRE HYDRANT
W.M.	WATER METER
W.V.	WATER VALVE
WELL	WELL HEAD

UTILITY COMPANY FACILITIES	
AD-COM	ADESTA COMMUNICATIONS
AW	ARTESIAN WATER
COM	COMCAST
DOT-COMM	DELDOT COMMUNICATIONS & TRAFFIC
DOT-E	DELDOT ELECTRIC
DPE	DELMARVA POWER ELECTRIC
DPG	DELMARVA POWER GAS
NCC	NEW CASTLE COUNTY SANITARY SEWER
UW	UNITED WATER
UNK-E	UNKNOWN ELECTRIC UTILITY
UNK	UNKNOWN UTILITY
VER	VERIZON

PROPOSED SYMBOLS

CONSTRUCTION	
	CONCRETE SAFETY BARRIER - PERMANENT
BFS	BIOFILTRATION SWALE
	BUTT JOINT
100+00	CONSTRUCTION BASELINE
	CURB, TYPE 1 & TYPE 3
	CURB, TYPE 2
	CURB & GUTTER, TYPE 1
	CURB & GUTTER, TYPE 2
	CURB & GUTTER, TYPE 3
	CURB & GUTTER, TYPE 4
CZ	CLEAR ZONE
	DRAINAGE INLET
	DITCH
	FENCE - METAL
	FENCE - WOOD
	FLARED END SECTION
	GUARDRAIL, TYPES 1 & 3
	GUARDRAIL, TYPE 2
	GUARDRAIL END TREATMENT - PARALLEL
	GUARDRAIL END TREATMENT - PARABOLIC
HC	HORIZONTAL CLEARANCE
	JUNCTION BOX - DRAINAGE
LOC	LIMIT OF CONSTRUCTION
	MANHOLE
	PAVEMENT PATCH
	PIPE & DIRECTIONAL FLOW ARROW
	RIPRAP
	P.C.C. SIDEWALK @ 4"
	P.C.C. SIDEWALK @ 6"
	UNDERDRAIN
	UNDERDRAIN OUTLET

CONSTRUCTION PHASING SYMBOLS	
	BARRICADE, TYPE 3
	CONCRETE SAFETY BARRIER - PORTABLE
	CONSTRUCTION WARNING SIGN LOCATION
END ROAD WORK	CONSTRUCTION WARNING SIGN
	CRASH CUSHION ARRAY
	DRUM - TRAFFIC CONTROL
	PHASING TRAFFIC FLOW ARROW

LANDSCAPING	
	SHRUBBERY
	CONIFEROUS TREE
	DECIDUOUS TREE

EROSION & SEDIMENT CONTROL	
DWB	DEWATERING BASIN
	EROSION CONTROL BLANKET
ED	EARTH DIKE
	INLET SEDIMENT CONTROL
	PERIMETER DIKE/SWALE
PST	PORTABLE SEDIMENT TANK
RSF	REINFORCED SILT FENCE
SBD	SANDBAG DIKE
SB	SANDBAG DIVERSION
	STONE CHECK DAM
SCE	STABILIZED CONSTRUCTION ENTRANCE
SF	SILT FENCE
SP-1	SUMP PIT, TYPE 1
SP-2	SUMP PIT, TYPE 2
ST	SEDIMENT TRAP
ST	SEDIMENT TRAP WITH INLET AS OUTLET
ST	SEDIMENT TRAP PIPE OUTLET
SW	STILLING WELL
	TEMPORARY SWALE
TSD	TEMPORARY SLOPE DRAIN

IDENTIFIERS	
A/C	ADJUST BY CONTRACTOR
A/O	ADJUST BY OTHERS
B	CONCRETE SAFETY BARRIER
C	CURB OR CURB & GUTTER
CJB	CONVERT TO JUNCTION BOX
CMH	CONVERT TO DRAINAGE MANHOLE
C/O	CURB OPENING
CR	CURB RAMP / TYPE
CR-N	CURB RAMP / TYPE - WITHOUT SIDEWALK SURFACE DETECTABLE WARNING SYSTEM
DI	DRAINAGE INLET
DND	DO NOT DISTURB
FES	FLARED END SECTION
FS	FILTRATION STRUCTURE
GR	GUARDRAIL
JB	JUNCTION BOX
LS	LANDSCAPE PLANTINGS
MH	MANHOLE
M	MONUMENT - RIGHT-OF-WAY
P	PIPE
RL/C	RELOCATE BY CONTRACTOR
RL/O	RELOCATE BY OTHERS
RM/C	REMOVE BY CONTRACTOR
RM/O	REMOVE BY OTHERS
ST	SEDIMENT TRAP
SF	SILT FENCE
UD	UNDERDRAIN

PAVEMENT SECTION(S)	
	OVERLAY PAVEMENT - SEE TYPICAL SECTIONS FOR MATERIALS AND DEPTHS
	RECONSTRUCTED PAVEMENT - SEE TYPICAL SECTIONS FOR MATERIALS AND DEPTHS
	DRIVEWAY AND ENTRANCE PAVEMENT - SEE TYPICAL SECTIONS FOR MATERIALS AND DEPTHS

RIGHT-OF-WAY SYMBOLS	
	PROPOSED RIGHT-OF-WAY MONUMENT
	EXISTING PROPERTY LINE
EASEMENT TYPE	EXISTING EASEMENT
	EXISTING RIGHT-OF-WAY
DA	PROPOSED DENIAL OF ACCESS
PE	PROPOSED PERMANENT EASEMENT
R/W	PROPOSED RIGHT-OF-WAY
R/W-DA	PROPOSED R/W & DENIAL OF ACCESS
TCE	TEMPORARY CONSTRUCTION EASEMENT
100+00	PROPOSED RIGHT-OF-WAY BASELINE
100+00	HISTORIC RIGHT-OF-WAY BASELINE

TRAFFIC	
ITMS-CON	ITMS CONDUIT
SIG-CON	SIGNAL CONDUIT
	CONDUIT JUNCTION WELL
	LUMINAIRE
	PAVEMENT MARKINGS
	PAVEMENT STRIPING
	TRAFFIC SIGN

MISCELLANEOUS	
	REMOVAL OF EXISTING PAVEMENT
CSF	CONSTRUCTION SAFETY FENCE
	PORTABLE IMPACT ATTENUATOR
	ARROW PANEL
OHW/WL	ORDINARY HIGH WATER / WETLAND
OHW	ORDINARY HIGH WATER
HW	HEADWALL
	8" P.C.C. SIDEWALK, SPECIAL

9/16/2010 4:33:23 PM
M:\PROJECTS\2003\03059_DELTRNPK\SRIMALL\CADD\3009004\PLANS\LG01_RAMPR1.DGN

DELAWARE DEPARTMENT OF TRANSPORTATION

ADDENDUMS / REVISIONS

NOT TO SCALE

SR1/I-95 INTERCHANGE - CHRISTIANA MALL ROAD BRIDGE

CONTRACT	BRIDGE NO.	1-223
T201009004	DESIGNED BY:	SNT
COUNTY		
NEW CASTLE	CHECKED BY:	CDW

LEGEND

SHEET NO. 3
TOTAL SHTS. 164

GENERAL NOTES

1. THIS PROJECT IS TO BE CONSTRUCTED IN ACCORDANCE WITH THE DELAWARE DEPARTMENT OF TRANSPORTATION "STANDARD SPECIFICATIONS", DATED AUGUST 2001 AND THE DELAWARE DEPARTMENT OF TRANSPORTATION "STANDARD CONSTRUCTION DETAILS", DATED 2001, INCLUDING ALL REVISIONS UP TO THE DATE OF ADVERTISEMENT.

2. THE CONTRACTOR SHALL GIVE TWO (2) WEEKS NOTICE TO THE PROPERTY OWNER WHEN ANY FIXTURE, SHRUB OR OTHER OBJECT MUST BE REMOVED FROM THE RIGHT OF WAY OR EASEMENT AREA. IF THE OWNER HAS NOT ATTEMPTED TO SALVAGE THIS PROPERTY, THE CONTRACTOR SHALL REMOVE IT WITHOUT OBLIGATION. COMPENSATION SHALL BE INCIDENTAL TO THE CONTRACT.

3. THE ENDS OF ALL CURBS SHALL BE DEPRESSED FLUSH WITH THE PAVEMENT AT A RATIO OF TWELVE TO ONE (12:1) UNLESS OTHERWISE DIRECTED BY THE ENGINEER.

4. THE CONTRACTOR SHALL PROVIDE AND INSTALL PVC SLEEVES (4" INSIDE MINIMUM DIAMETER, 6" INSIDE MAXIMUM DIAMETER) IN PROPOSED CONCRETE SIDEWALKS, ISLANDS, AND MEDIANS FOR FUTURE TRAFFIC SIGN POSTS AS DIRECTED BY THE ENGINEER. THE LOWER END OF THE SLEEVE SHALL SIT ON THE TOP OF THE SUBBASE MATERIAL. THE COST SHALL BE INCIDENTAL TO THE CONTRACT.

5. STAGING AREAS - PROPER EROSION AND SEDIMENT CONTROL MEASURES AS DETERMINED BY THE ENGINEER SHALL BE INSTALLED IN ALL STAGING AREAS. ALL AREAS USED BY THE CONTRACTOR FOR STAGING OPERATIONS SHALL BE FULLY RESTORED BY THE CONTRACTOR UPON COMPLETION OF THE CONTRACT. IF THE STAGING AREA IS PAVED, IT SHALL BE RESTORED TO ITS ORIGINAL CONDITION. IF THE AREA IS UNPAVED, IT SHALL BE RE-GRADED, TOPSOILED, SEEDED AND MULCHED IN ACCORDANCE WITH DELAWARE STANDARD SPECIFICATIONS 732, 734 AND 735, FOR TOPSOIL, SEED AND MULCH RESPECTIVELY, TO THE SATISFACTION OF THE ENGINEER. THE SEED SHALL ADHERE TO THE SPECIFICATIONS OF SECTION 734 FOR PERMANENT GRASS SEEDING - DRY GROUND. ALL COSTS ASSOCIATED WITH RESTORATION OF THE STAGING AREA SHALL BE AT THE CONTRACTOR'S EXPENSE. IF THE ENGINEER DETERMINES THAT A SATISFACTORY STAND OF GRASS DOES NOT EXIST AT THE TIME OF FINAL INSPECTION, ALL COSTS ASSOCIATED WITH REESTABLISHING A SATISFACTORY STAND OF GRASS SHALL BE AT THE CONTRACTOR'S EXPENSE.

6. SITE REVIEWER - AN EROSION CONTROL SITE REVIEWER SHALL BE A PERSON FROM THE CONTRACTOR'S STAFF ASSIGNED TO EROSION AND SEDIMENT CONTROL IMPLEMENTATION AND MAINTENANCE AND SHALL BE REQUIRED ON SPECIFIC PROJECTS. THE NAME AND DNREC CERTIFICATION NUMBER OF EACH SITE REVIEWER SO REQUIRED SHALL BE SUBMITTED TO THE DEPARTMENT AT THE TIME OF BID. THE NAME OF THE DELAWARE REGISTERED PROFESSIONAL ENGINEER PROVIDING DIRECTION AND SUPERVISION OF THE SITE REVIEWER, AS REQUIRED IN SECTION 12.3 OF THE DELAWARE SEDIMENT AND STORMWATER REGULATIONS, SHALL ALSO BE SUBMITTED TO THE DEPARTMENT AT THE TIME OF BID. THE SITE REVIEWER REQUIREMENTS IN EFFECT ON THIS PROJECT SHALL BE MARKED WITH AN "X" BELOW:

EROSION POTENTIAL FOR THIS PROJECT	SITE REVIEWER REQUIREMENT
( ) INSIGNIFICANT	NONE
( ) MINOR	CONTRACTOR CERTIFICATION COURSE TRAINING ONLY, AS DEFINED IN SECTION 13 OF THE DELAWARE SEDIMENT AND STORMWATER REGULATIONS.
( ) MEDIUM	AT THE TIME OF BID OF THE CONTRACT, EITHER THE SUPERINTENDENT OR A SEPARATE INDIVIDUAL FROM THE CONTRACTOR'S STAFF SHALL BE A CERTIFIED CONSTRUCTION REVIEWER (CCR), AS DEFINED IN SECTION 12 OF THE DELAWARE SEDIMENT AND STORMWATER REGULATIONS.
(X) MAJOR	SUPERINTENDENT AND AN INDIVIDUAL FROM CONTRACTOR'S STAFF SHALL BE CCR. ONE INDIVIDUAL FROM THE CONTRACTOR'S STAFF MUST BE A CCR AT THE TIME OF BID OF THE CONTRACT. THE SUPERINTENDENT MUST BECOME A CCR WITHIN ONE YEAR AFTER THE AWARD OF CONTRACT.

7. ELECTRONIC PROJECT FILES THAT WILL BE MADE AVAILABLE TO THE CONTRACTOR INCLUDE:

( )	NONE
(X)	ASCII DATA FILES WITH COORDINATES AND ELEVATIONS FOR PROPOSED POINTS AS SELECTED BY THE ENGINEER.
(X)	RASTER FILES, IN .CAL FILE FORMAT, FOR ALL PLAN SHEETS.
( )	EXISTING DIGITAL TERRAIN MODEL, IN .DTM FILE FORMAT, COMPATIBLE WITH SOFTWARE CURRENTLY USED BY DELDOT.
( )	PROPOSED DIGITAL TERRAIN MODEL, IN .DTM FILE FORMAT, COMPATIBLE WITH SOFTWARE CURRENTLY USED BY DELDOT.
( )	DESIGN FILE, IN .DGN FILE FORMAT, CONTAINING ONLY THE PROPOSED 3D TRIANGLES OF THE PROPOSED DIGITAL TERRAIN MODEL (DTM).

8. AMERICAN TRAFFIC SAFETY SERVICES ASSOCIATION (ATSSA) CERTIFIED TRAFFIC CONTROL SUPERVISOR REQUIREMENT FOR THIS PROJECT.

( )	THE CONTRACTOR SHALL NOT BE REQUIRED TO HAVE AN ATSSA SUPERVISOR ASSIGNED TO THIS PROJECT.
( )	THE CONTRACTOR SHALL HAVE AN ATSSA SUPERVISOR ASSIGNED TO THIS PROJECT. THE CONTRACTOR'S GENERAL SUPERINTENDENT FOR THIS PROJECT OR ANOTHER ATSSA CERTIFIED MEMBER OF THE CONTRACTOR'S PROJECT STAFF MAY BE THE ATSSA SUPERVISOR.
(X)	THE CONTRACTOR SHALL HAVE AN ATSSA SUPERVISOR ASSIGNED TO THIS PROJECT. THE ATSSA SUPERVISOR'S SOLE JOB SHALL BE SUPERVISION OF THE INSTALLATION, OPERATION AND MAINTENANCE OF TRAFFIC CONTROL DEVICES FOR THIS PROJECT. THE CONTRACTOR'S GENERAL SUPERINTENDENT FOR THIS PROJECT SHALL NOT BE THE ATSSA SUPERVISOR.

9. THE DISTURBED AREA FOR THIS PROJECT IS 18.28 ACRES.

PROJECT NOTES

SECTION 100

1. ANY DAMAGE TO ITEMS NOTED TO BE RELOCATED OR RESET BY THE CONTRACTOR, AT THE DISCRETION OF THE ENGINEER, SHALL BE REPAIRED AND/OR REPLACED IN KIND AT THE CONTRACTOR'S EXPENSE.

2. UNLESS OTHERWISE NOTED ON THE PLANS, THE CONTRACTOR SHALL, AS PART OF HIS PROJECT SCHEDULE, SUBMIT TO THE ENGINEER AN ESTIMATE OF THE MONTHLY PAYMENTS EXPECTED TO BE RECEIVED ON THE CONTRACT. THIS WILL BE REFERENCED AS THE "MONTHLY SPEND PAYMENT CHART".

   A CHART IN MICROSOFT EXCEL, MICROSOFT WORD, OR HAND WRITTEN FORMAT WILL BE ACCEPTABLE FOR THIS PURPOSE. THE CHART SHOULD INCLUDE, AS A MINIMUM, COLUMNS FOR THE MONTH, YEAR AND ESTIMATED MONTHLY PAYMENTS. THE TOTAL OF ALL ESTIMATED MONTHLY PAYMENTS SHOULD EQUAL THE AWARDED CONTRACT TOTAL BID PRICE.

   THE ENGINEER MAY REQUEST AN UPDATED "MONTHLY SPEND PAYMENT CHART" AT HIS DISCRETION, DEPENDING ON THE ACCURACY OF THE INITIAL ESTIMATES AND ACCORDING TO THE OVERALL NEEDS OF THE DEPARTMENT.

   THE "MONTHLY SPEND PAYMENT CHART" WILL NOT BE CONSIDERED A BINDING DOCUMENT BY EITHER THE CONTRACTOR OR THE DEPARTMENT AND IS CONSIDERED SOLELY INFORMATIONAL.

   ON PROJECTS REQUIRING CPM SCHEDULES, THE CONTRACTOR MAY, BUT IS NOT REQUIRED TO, "COST LOAD" THE CPM SCHEDULE IN ORDER TO GENERATE THE MONTHLY PAYMENT ESTIMATES.

   COSTS TO PREPARE AND/OR UPDATE THE "MONTHLY SPEND PAYMENT CHART" ARE ADDRESSED AS FOLLOWS:
   A. ON CONTRACTS REQUIRING CPM SCHEDULES AND UPDATES, PREPARATION OF THE INITIAL CHART SHALL BE INCIDENTAL TO ITEM 763508. UPDATES SHALL BE INCIDENTAL TO ITEM 763509.

   B. ON CONTRACTS NOT REQUIRING CPM SCHEDULES, THE COST TO PREPARE AND UPDATE THE "MONTHLY SPEND PAYMENT CHART" SHALL BE INCLUDED IN ITEM 763000 - INITIAL EXPENSE.

SECTION 200

3. THE ENGINEER MAY REQUIRE THE CONTRACTOR TO EXCAVATE TEST PITS ALONG PROPOSED DRAINAGE RUNS, AT POINTS OF POSSIBLE UTILITY CONFLICTS, TO DETERMINE IF A CONFLICT EXISTS. ANY CONFLICTS SHALL BE COORDINATED BY THE CONTRACTOR, WITH THE ENGINEER AND THE UTILITY COMPANY INVOLVED. THE ENGINEER SHALL ULTIMATELY DETERMINE THE SOLUTION TO THE UTILITY CONFLICT. TEST HOLES SHALL BE MEASURED AND PAID FOR IN ACCORDANCE WITH ITEM 208000 - EXCAVATION AND BACKFILL FOR PIPE TRENCHES, BUT ONLY TO THE ACTUAL DEPTH EXCAVATED.

4. ITEMS TO BE REMOVED UNDER ITEM 211000 - REMOVAL OF STRUCTURES AND OBSTRUCTIONS SHALL INCLUDE, BUT NOT BE LIMITED TO, THE OVERHEAD SIGN STRUCTURES AND FOUNDATIONS. ALL EXISTING OVERHEAD SIGN STRUCTURES SHALL BECOME THE PROPERTY OF THE CONTRACTOR FOLLOWING REMOVAL. THE OVERHEAD SIGN STRUCTURE FOUNDATIONS SHALL BE REMOVED IN THEIR ENTIRETY.

5. EXISTING DRAINAGE PIPES SHALL BE REMOVED WHERE SHOWN ON PLANS AND PAYMENT SHALL BE INCIDENTAL TO ITEM 202000, EXCAVATION AND EMBANKMENT.

6. THIS PROJECT IS COVERED UNDER AN NPDES GENERAL PERMIT FOR CONSTRUCTION. UNDER THE GENERAL PERMIT, COMPLIANCE WITH DELDOT'S APPROVED SEDIMENT AND STORMWATER MANAGEMENT PLANS WILL CONSTITUTE COMPLIANCE WITH THE NPDES INDUSTRIAL PERMITTING REQUIREMENTS FOR THIS CONSTRUCTION PROJECT. A COPY OF THE NPDES GENERAL PERMIT AND NOI IS KEPT ON FILE IN EACH OF THE CONSTRUCTION OFFICES AND THE DEPARTMENT'S TEAM SUPPORT SECTION. A COPY OF THE GENERAL PERMIT OR THE NOI CAN BE OBTAINED UPON REQUEST FROM EITHER THE DEPARTMENT'S STORMWATER ENGINEER OR THE APPROPRIATE CONSTRUCTION ENGINEER.

7. ALL EXISTING DRAINAGE SYSTEMS SHOWN WITHIN THE RIGHT-OF-WAY ARE TO REMAIN OPERATIONAL UNLESS DENOTED FOR ABANDONMENT AT THE END OF THIS PROJECT'S CONSTRUCTION. ALL EXISTING DRAINAGE STRUCTURES AND PIPES WITHIN THE PROJECT LIMITS SHALL BE CLEANED OF ALL SEDIMENT AND DEBRIS IN COMPLIANCE WITH DNREC GUIDELINES AS DIRECTED BY THE ENGINEER. COST TO BE INCLUDED IN ITEM 250000, SEDIMENT REMOVAL.

SECTION 300

8. A. THE CONTRACTOR MAY ELECT TO USE ANY OF THE FOLLOWING MATERIALS TO MEET THE REQUIREMENTS OF ITEM 302007 - GRADED AGGREGATE BASE COURSE, TYPE 'B':
   a. CRUSHED STONE (PER STANDARD SPECIFICATION 821)
   b. CRUSHED CONCRETE (PER STANDARD SPECIFICATION 821)
   c. HOT-MIX MILLINGS (PER SPECIAL PROVISION 302514 MILLED HOT-MIX BASE COURSE)

   THE CONTRACTOR WILL NOT BE ALLOWED TO MIX DIFFERENT MATERIALS (OR SIMILAR MATERIALS FROM DIFFERENT SOURCES) TO MEET THE REQUIREMENTS OF ITEM 302007 - GRADED AGGREGATE BASE COURSE, TYPE 'B'.

   ALL OF THE ABOVE LISTED MATERIALS ARE PERMITTED FOR USE ON THE JOB, PROVIDED THEY ARE SEPARATED INTO APPROVED AREAS. EACH AREA OF BASE COURSE MUST BE CONSTRUCTED USING MATERIALS FROM A SINGULAR SOURCE, FULL DEPTH, IN ORDER THAT PROPER TESTING MAY BE ACCOMPLISHED. THE CONTRACTOR AND DELDOT'S PROJECT ENGINEER SHALL AGREE ON THE LIMITS OF EACH SOURCE OF MATERIAL PRIOR TO PLACEMENT.

   B. THE QUANTITY USED FOR BASE OF EACH OF THE ABOVE LISTED MATERIALS WILL BE THE CONTRACTOR'S CHOICE, WITH THE TOTAL MEETING THE ADVERTISED QUANTITY OF ITEM 302007 - GRADED AGGREGATE BASE COURSE, TYPE 'B'.

   C. THE CONTRACTOR MAY ALSO ELECT TO RECYCLE MILLINGS FOR USE IN HOT-MIX AS PERMITTED BY THE STANDARD SPECIFICATIONS. THE CHOICE OF THE QUANTITY OF MILLINGS USED FOR THIS PURPOSE, OR FOR BASE COURSE, LIES WITH THE CONTRACTOR. ALL MILLING MATERIAL SHALL BECOME PROPERTY OF THE CONTRACTOR.

   D. HOT-MIX MILLINGS MAY BE GENERATED FROM THE FOLLOWING SOURCES:
   a. MATERIAL MADE AVAILABLE WHEN MILLED ON THIS CONTRACT UNDER ITEM 760507.
   b. MATERIAL MILLED ON THIS CONTRACT AT THE CONTRACTOR'S CHOICE UNDER ITEM 202000.
   c. MILLED MATERIAL FURNISHED ON THE JOB FROM THE CONTRACTOR'S YARD OR OTHER OUTSIDE SOURCE.
   ALL MILLED MATERIALS SHALL MEET THE MATERIAL REQUIREMENTS OF ITEM 302514 - MILLED HOT-MIX BASE COURSE.

   E. PAYMENT CLARIFICATION:
   a. SHOULD THE CONTRACTOR ELECT TO MILL PORTIONS OF HOT-MIX SHOWN ON THE PLANS TO BE REMOVED UNDER ITEM 202000 - EXCAVATION AND EMBANKMENT THE COST OF MILLING THIS HOT-MIX WILL BE PAID AS ITEM 202000 - EXCAVATION AND EMBANKMENT. THE MILLINGS GENERATED MAY BE RECYCLED INTO HOT-MIX, UTILIZED FOR BASE COURSE, OR DISPOSED OF TO AN APPROVED SITE. HAULING COSTS FOR DISPOSAL AND/OR RECYCLING ARE INCIDENTAL TO ITEM 202000 - EXCAVATION AND EMBANKMENT.

   b. MILLINGS GENERATED UNDER ITEM 760507 - PROFILE MILLING, HOT-MIX MAY BE RECYCLED INTO HOT-MIX, UTILIZED FOR BASE COURSE OR DISPOSED OF BY THE CONTRACTOR TO AN APPROVED SITE. NO SEPARATE PAYMENT WILL BE MADE FOR TRANSPORTING MILLINGS ON SITE OR TO AN APPROVED DISPOSAL SITE.

   c. SHOULD THE CONTRACTOR ELECT TO TEMPORARILY STOCKPILE MILLINGS ON THE JOB SITE FOR LATER USE, ALL COSTS FOR STOCKPILING AND SUBSEQUENT REHANDLING SHALL BE INCIDENTAL TO ITEM 202000 - EXCAVATION AND EMBANKMENT.

   d. MILLINGS USED FOR BASE COURSE SHALL BE PLACED IN ACCORDANCE WITH THE REQUIREMENTS OF SPECIAL PROVISION 302514 - MILLED HOT-MIX BASE COURSE. NO SEPARATE PAYMENT WILL BE MADE TO FURNISH MILLINGS FROM AN OUTSIDE SOURCE OR TRANSPORT MILLINGS WITHIN THE PROJECT LIMITS. MILLINGS USED FOR BASE COURSE WILL BE PAID IN PLACE AT THE UNIT BID PRICE FOR ITEM 302007 - GRADED AGGREGATE BASE COUSRE, TYPE 'B'.

   e. ALL COSTS TO UTILIZE MILLINGS IN RECYCLED HOT-MIX WILL BE INCIDENTAL TO THE UNIT PRICE BID FOR THE HOT-MIX ITEM USING THE RECYCLED MATERIAL.

   f. SPECIAL PROVISION 302514 - MILLED HOT-MIX BASE COURSE IS PROVIDED TO SPECIFY THE MEANS OF LAY DOWN AND COMPACTION AS WELL AS THE MATERIAL REQUIREMENTS FOR MILLINGS USED AS BASE COURSE. ALL COSTS TO BRING THE MILLINGS INTO COMPLIANCE WITH THE REQUIREMENTS OF ITEM - 302514 MILLED HOT-MIX BASE COURSE ARE INCIDENTAL TO ITEM 302007 - GRADED AGGREGATE BASE COURSE, TYPE 'B'. NO PAYMENT WILL BE MADE FOR ITEM 302514 - MILLED HOT-MIX BASE COURSE. THE QUANTITY OF MILLINGS USED FOR BASE COURSE WILL BE PAID FOR UNDER ITEM 302007 - GRADED AGGREGATE BASE COURSE.

SECTION 600

9. THE DEPARTMENT AND THE CONTRACTOR SHALL INSPECT ALL EXISTING PIPES AND DRAINAGE STRUCTURES TO BE USED IN THE FINAL DRAINAGE SYSTEM AND AGREE ON THE CONDITION PRIOR TO THE START OF CONSTRUCTION. EXISTING PIPES AND DRAINAGE STRUCTURES DAMAGED DUE TO CONTRACTOR OPERATIONS SHALL BE REPAIRED OR REPLACED IN-KIND AT THE CONTRACTOR'S EXPENSE. THE CONTRACTOR IS REQUIRED TO VIDEO INSPECT NEW PIPE RUNS TO CONFIRM CONDITION PRIOR TO ACCEPTANCE. PAYMENT FOR VIDEO INSPECTION OF NEW PIPES WILL BE MADE UNDER ITEM 612529 - VIDEO INSPECTION.

SECTION 700

10. IN AREAS WHERE PROPOSED CURB MEETS EXISTING CURB AND THE TWO CURB TYPES ARE NOT SIMILAR, THE PROPOSED CURB SHALL BE TRANSITIONED IN 10 LINEAR FEET, UNLESS OTHERWISE DIRECTED BY THE ENGINEER. PAYMENT FOR THIS WORK, INCLUDING SAW CUTTING EXISTING CURB SHALL BE INCIDENTAL TO THE PROPOSED CURB ITEM.

11. WHERE PROPOSED CONCRETE SIDEWALK IS CONSTRUCTED TO MEET EXISTING SIDEWALK, THE EXISTING SIDEWALK SHALL BE SAWCUT AT THE TIE-IN POINT OR MEET THE NEAREST EXISTING SIDEWALK JOINT. ALL SAW CUTTING SHALL BE FULL DEPTH, UNLESS OTHERWISE NOTED ON THE PLANS OR DIRECTED BY THE ENGINEER AND SHALL BE PAID FOR UNDER ITEM 762002 - SAWCUTTING, CONCRETE, FULL DEPTH.

12. PORTLAND CEMENT CONCRETE CHANNELIZING ISLANDS THAT ARE LESS THAN 75 SQ FT MAY BE POURED MONOLITHICALLY, OR AS DIRECTED BY THE ENGINEER.

13. STATION AND ELEVATION DATA GIVEN FOR DRAINAGE STRUCTURES ARE TO BE APPLIED TO THE CENTER OF THE GRATE FOR INLETS, AND TO THE CENTER OF THE STRUCTURE FOR JUNCTION BOXES AND MANHOLES.

14. DRAINAGE INLET GRATES ADJACENT TO THE ROAD, WITHIN THE PROJECT LIMITS, WHICH ARE NOT TYPE 1 SHALL BE REPLACED. THE ACTUAL LOCATIONS, THE NEED FOR ANY GRATE MODIFICATIONS OR FOR NEW FRAMES SHALL BE DETERMINED BY THE ENGINEER. ALL REPLACED GRATES/FRAMES SHALL BE DELIVERED TO THE NEAREST DISTRICT MAINTENANCE YARD WITH THE COST OF DELIVERY INCIDENTAL TO ITEM 708500 - REPLACING CATCH BASIN GRATES. FINAL PAYMENT FOR REPLACED GRATES/FRAMES SHALL NOT BE MADE UNTIL RECEIPT OF DELIVERED MATERIALS IS PRODUCED, SIGNED BY A DELDOT MAINTENANCE YARD SUPERVISOR.

15. THE NEW CASTLE COUNTY DEPARTMENT OF PUBLIC WORKS SHALL SUPPLY AND THE STATE'S CONTRACTOR SHALL INSTALL NEW SELF SEALING MANHOLE FRAMES AND COVERS ON ALL COUNTY SEWER MANHOLES, THAT ARE NOT BEING RELOCATED, WITHIN THE PROJECT LIMITS IN ACCORDANCE WITH THE COUNTY'S STANDARD SPECIFICATIONS. THE EXISTING MANHOLE FRAMES AND COVERS THAT ARE REMOVED SHALL BECOME THE PROPERTY OF THE STATE'S CONTRACTOR. PAYMENT SHALL BE INCIDENTAL TO ITEM 710506 - ADJUST AND REPAIR EXISTING SANITARY SEWER MANHOLE.

16. ALL PAVED AREAS TO BE RECONSTRUCTED OR WIDENED SHALL BE SAWCUT AT THE POINT WHERE THE NEW PAVEMENT IS TO TIE INTO THE EXISTING PAVEMENT.

17. ALL HOT-MIX SAW CUTTING SHALL BE FULL DEPTH, UNLESS OTHERWISE NOTED ON THE PLANS, OR AS DIRECTED BY THE ENGINEER.

18. WHERE ADJUSTMENTS ARE REQUIRED TO NEW DRAINAGE STRUCTURES I.E. DRAINAGE INLETS, MANHOLES, JUNCTION BOXES, ETC., FOR STAGED CONSTRUCTION, THE ADJUSTED TOPS SHALL BE CAST-IN-PLACE CONCRETE. ELEVATION ADJUSTMENTS SHALL NOT EXCEED 1'. THIS NOTE SHALL SUPERSEDE ANY REFERENCE TO STANDARD CONSTRUCTION METHODS AS REFERRED TO ON THE STANDARD CONSTRUCTION DETAIL SHEETS. CONTRACTOR SHALL SUBMIT DETAILED PLANS SHOWING SECTIONS, JOINTS, REINFORCEMENT AND OTHER PERTINENT INFORMATION FOR APPROVAL. COST SHALL BE INCIDENTAL TO THE RESPECTIVE DRAINAGE STRUCTURE.

19. ALL COSTS ASSOCIATED WITH CONNECTING PROPOSED CONDUIT TO EXISTING JUNCTION WELLS SHALL BE CONSIDERED INCIDENTAL TO THE COST OF THE CONDUIT BEING INSTALLED.

20. ALL GUARDRAIL POST STAKEOUT SHALL BE COORDINATED WITH EXISTING AND PROPOSED STORM DRAIN SYSTEMS, UNDERDRAIN OUTLET PIPES, AND UTILITIES TO AVOID DISTURBANCE OF THE UNDERGROUND FACILITY. COST SHALL BE INCIDENTAL TO THE GUARDRAIL ITEM BEING INSTALLED. ANY DAMAGE TO THESE SYSTEMS SHALL BE REPAIRED AT CONTRACTOR'S EXPENSE.

21. THE CONTRACTOR SHALL BE RESPONSIBLE FOR STAKING ALL RIGHT OF WAY AND EASEMENT LINES ACQUIRED FOR THE PROJECT'S CONSTRUCTION. COST SHALL BE INCLUDED IN ITEM 763501, CONSTRUCTION ENGINEERING.

PROJECT NOTES

SECTION 700 CONTINUED

22. THE COST FOR ANY SHEETING USED FOR POLE BASE INSTALLATION SHALL BE INCIDENTAL TO THE RESPECTIVE POLE BASE ITEM.

23. THE CONTRACTOR SHALL MAINTAIN ALL MOWER ACCESSIBLE GRASS WITHIN THE LIMIT OF CONSTRUCTION BEHIND PORTABLE P.C.C. SAFETY BARRIER TO A MAXIMUM HEIGHT OF 6 INCHES UNLESS OTHERWISE DIRECTED BY THE ENGINEER. THE CONTRACTOR SHALL ANTICIPATE, BUT IS NOT LIMITED TO A MINIMUM OF 4 CUTTINGS PER YEAR. ALL COSTS ASSOCIATED WITH MAINTAINING A 6 INCH MAXIMUM GRASS HEIGHT SHALL BE PAID UNDER ITEM 736502, MOWING.

24. WHEN REMOVAL OF AN EXISTING DRAINAGE SYSTEM (PIPE OR STRUCTURE) IS REQUIRED TO INSTALL A PROPOSED DRAINAGE SYSTEM, THE COST OF THE EXISTING DRAINAGE SYSTEM REMOVAL SHALL BE INCLUDED IN THE UNIT COST BID FOR THE RESPECTIVE PROPOSED DRAINAGE PIPE OR STRUCTURE.

MISCELLANEOUS

25. THE CONTRACTOR SHALL CONTACT MICHAEL ELLER, THE CHIEF OF SCHEDULING FOR DART FIRST STATE, 14 DAYS PRIOR TO THE START OF CONSTRUCTION AT 302-576-6061.

26. CROSS SECTIONS USED IN THE PREPARATION OF THIS CONTRACT ARE AVAILABLE FROM THE DEPARTMENT.

27. RIGHT-OF-WAY PLANS FOR RIGHT-OF-WAY OR EASEMENT STAKEOUT PURPOSES ARE AVAILABLE FROM THE DEPARTMENT.

28. DELDOT WILL BE RESPONSIBLE FOR OBTAINING AND MODIFYING THE FOLLOWING PERMITS:
    - ACOE INDIVIDUAL PERMIT
    - DNREC SUBAQUEOUS LANDS PERMIT
    - DNREC WETLANDS PERMIT
    - DNREC WATER QUALITY CERTIFICATION
    - DNREC COASTAL ZONE CONSISTENCY CERTIFICATION
    - NEW CASTLE COUNTY FLOODPLAIN DEVELOPMENT APPROVAL
    - NEW CASTLE COUNTY NOISE ORDINANCE

    THE CONTRACTOR SHALL BE RESPONSIBLE FOR OBTAINING ALL OTHER PERMITS REQUIRED, FOR PURPOSES OF CONSTRUCTION FOR THE PROJECT. DIFFICULTIES IN OBTAINING THE PERMITS OR CHANGES TO PERMITS, EITHER BY DELDOT OR THE CONTRACTOR, WILL NOT JUSTIFY A DELAY IN THE CONSTRUCTION SCHEDULE OR INCREASE IN COST.

29. IT SHALL BE REQUIRED THAT, AT A MINIMUM, A CREW CONSISTING OF THREE PERSONS WITH A BACKHOE BE DEVOTED TO ADDRESSING EROSION AND SEDIMENT CONTROL ITEMS ON THE CONTRACT ON A DAILY BASIS. ADDITIONAL PERSONNEL AND OTHER TOOLS AND/OR MECHANIZED EQUIPMENT MAY BE DEEMED NECESSARY TO ADDRESS THESE ITEMS AND SHALL BE MADE AVAILABLE AS REQUIRED. THE CREW, TOOLS, AND EQUIPMENT MAY BE RELEASED OR REDUCED BY THE ENGINEER ON A DAILY BASIS ONCE IT HAS BEEN DETERMINED THAT ALL EROSION AND SEDIMENT CONTROL ITEMS HAVE BEEN ADEQUATELY ADDRESSED. IF THE NECESSARY CREW, TOOLS AND EQUIPMENT ARE NOT DEVOTED AND ACTIVELY WORKING TO ADDRESS THE NECESSARY EROSION AND SEDIMENT CONTROL ITEMS AND HAVE NOT BEEN RELEASED BY THE ENGINEER, PAYMENT MAY BE DENIED FOR ALL WORK PERFORMED DURING THE TIME PERIOD THAT THE EROSION AND SEDIMENT CONTROL ITEMS HAVE NOT BEEN ADDRESSED TO THE SATISFACTION OF THE ENGINEER. ALL COSTS ASSOCIATED WITH PROVIDING A CREW, TOOLS AND EQUIPMENT SHALL BE INCIDENTAL TO THE APPLICABLE EROSION AND SEDIMENT CONTROL ITEMS.

30. THE BASE TOPOGRAPHY IS FROM AERIAL MAPPING, WHICH HAS BEEN SUPPLEMENTED AND ADJUSTED WITH GROUND SURVEY.

31. SEE ENVIRONMENTAL COMPLIANCE PLANS FOR FURTHER RESTRICTIONS/GUIDANCE ASSOCIATED WITH THIS PROJECT.

△1 32. THE CONTRACTOR SHALL STOCKPILE ALL SUITABLE EXCESS PROJECT EXCAVATION MEETING THE REQUIREMENTS OF BORROW TYPE F IN SOIL STOCKPILE AREAS A AND B FOR USE IN FUTURE CONTRACT T200809003. SOIL STOCKPILES SHALL BE STABILIZED WITH ITEM 734017, TEMPORARY GRASS SEEDING, DRY GROUND AND MULCHED WITH ITEM 735006, MULCHING STRAW. ALL UNSUITABLE EXCAVATED MATERIAL SHALL BE PROPERLY DISPOSED OF BY THE CONTRACTOR.

△1 33. THE CONTRACTOR IS ADVISED THAT OTHER ROADWAY CONTRACTS WILL BE UNDER CONSTRUCTION ADJACENT TO AND AT THE SAME TIME AS THIS PROJECT. THEREFORE, THE CONTRACTOR MUST COORDINATE CONSTRUCTION ACTIVITIES WITH DELDOT AND THESE OTHER CONTRACTORS AS APPLICABLE.

EARTHWORK SUMMARY

EXCAVATION	
EXCAVATION FROM CROSS SECTIONS	21,087 C.Y.
EXCAVATION FOR ROOTMAT REMOVAL	819 C.Y.
EXCAVATION FOR PAVEMENT REMOVAL	997 C.Y.
EXCAVATION FOR STORMWATER PONDS	58,987 C.Y.
EXCAVATION FOR STRUCTURES	2,100 C.Y.
MISC. EXCAVATION (DRAINAGE, POLE BASES, ETC.)	3,445 C.Y.
ROCK EXCAVATION FOR ROADWAY AND TRENCHES	0 C.Y.
TOPSOIL STRIPPING	1252 C.Y.
TOTAL EXCAVATION	88,687 C.Y.
EXCAVATION AVAILABLE FOR EMBANKMENT	
EXCAVATION MEETING BORROW TYPE 'A'	0 C.Y.
EXCAVATION MEETING BORROW TYPE 'F'	57,171 C.Y.
EXCAVATION MEETING TOPSOIL	1,491 C.Y.
EMBANKMENT REQUIREMENTS	
BORROW TYPE 'A' REQUIRED (INCLUDING UNDERCUT)	100 C.Y.
BORROW TYPE 'F' REQUIRED	11,609 C.Y.
TOPSOIL REQUIRED	5,413 C.Y.
MATERIAL BALANCE ("+"= EXCESS, "-"= NEED)	
BORROW TYPE 'A'	-100 C.Y.
BORROW TYPE 'F'	+45,562 C.Y.
TOPSOIL	-3,922 C.Y.
UNSUITABLE MATERIAL	29,926 C.Y.

NOTES:
1) THE VALUES LISTED IN THE EARTHWORK SUMMARY ARE APPROXIMATE AND ARE NOT TO BE USED AS A BASIS OF PAYMENT. THE EARTHWORK SUMMARY IS CONSIDERED FOR INFORMATIONAL PURPOSES ONLY.

2) OTHER SOURCES OF EXCAVATION MAY INCLUDE PIPE TRENCH EXCAVATION, STRUCTURE EXCAVATION, UNDERCUT EXCAVATION, STORMWATER MANAGEMENT POND EXCAVATION, ENVIRONMENTAL SITE EXCAVATION, MAINTENANCE OF TRAFFIC EXCAVATION, ETC.

3) UNSUITABLE MATERIALS INCLUDE UNDERCUT SOILS, BITUMINOUS PAVEMENT, ETC.

DESIGN SPEED TABLE

ROADWAY	DESIGN SPEED
SR7/SR1	60 MPH
RAMP G1	50 MPH
RAMP R	25 MPH
RAMP R1	30 MPH
MALL RING ROAD	30 MPH

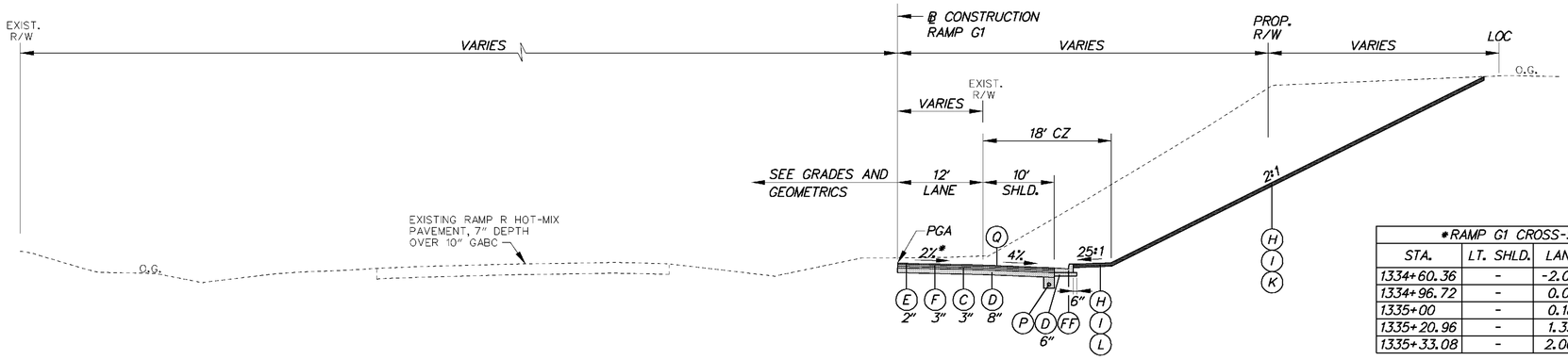

*RAMP G1 CROSS-SLOPES			
STA.	LT. SHLD.	LANES	RT. SHLD.
1334+60.36	-	-2.00%	-4.00%
1334+96.72	-	0.00%	-4.00%
1335+00	-	0.18%	-4.00%
1335+20.96	-	1.33%	-4.00%
1335+33.08	-	2.00%	-4.00%

RAMP G1

STA. 1333+90.00 TO STA. 1335+20.96

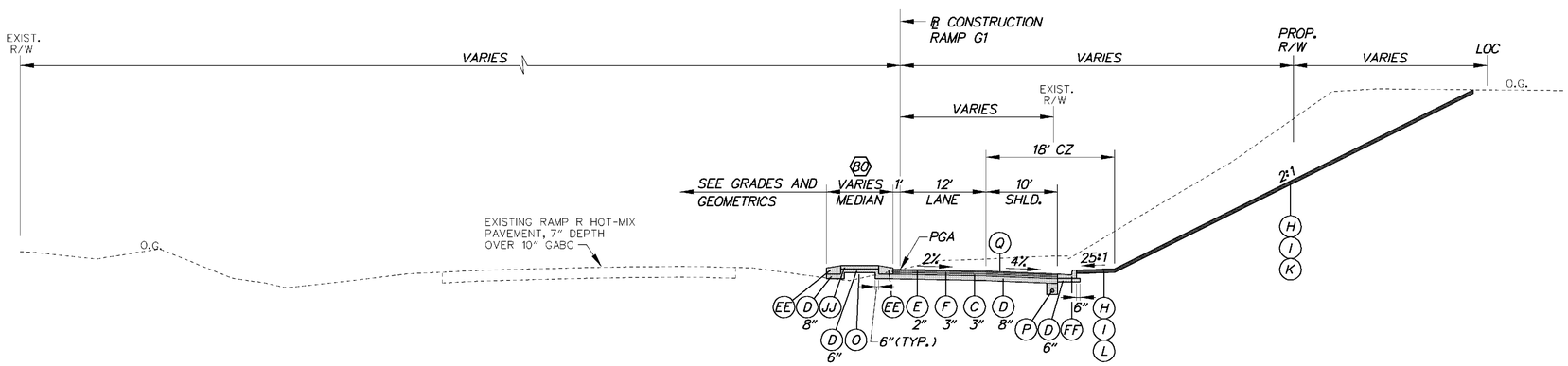

RAMP G1

STA. 1332+97.46 TO STA. 1333+90.00

80 STA.1332+97.46 TO STA.1333+40.00
WIDTH TAPERS 6.08' TO 40'

STA.1333+40.00 TO STA.1333+90.00
WIDTH TAPERS 40' TO 5.5'

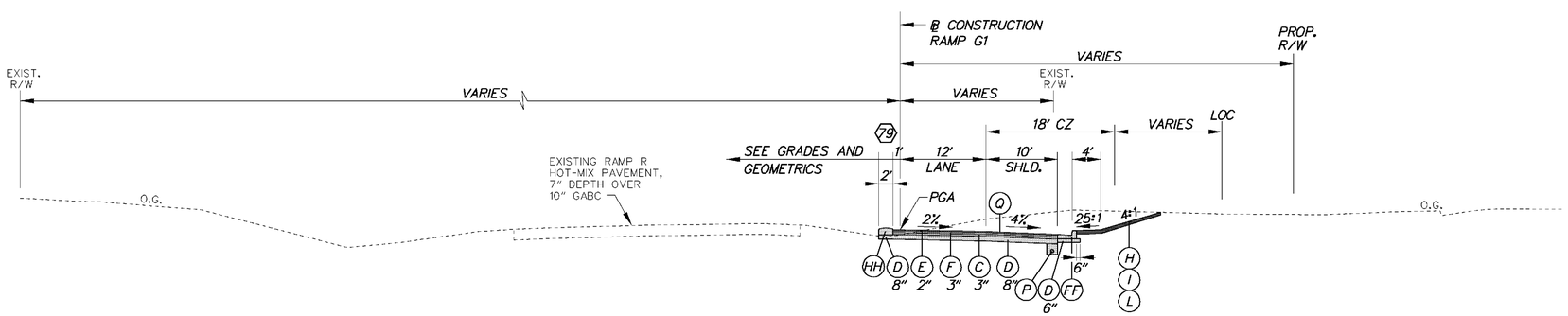

RAMP G1

STA. 1332+40.00 TO STA. 1332+97.46

79 STA.1332+72.32 TO STA.1332+97.46
WIDTH TAPERS 2' TO 6.08'

LEGEND

- (A) ITEM 401708 - SUPERPAVE, TYPE C HOT-MIX, 160 GYRATIONS, PG 70-22 (NON-CARBONATE STONE)
- (B) ITEM 401654 - SUPERPAVE, TYPE B HOT-MIX, 160 GYRATIONS, PG 70-22
- (C) ITEM 401663 - SUPERPAVE, BITUMINOUS CONCRETE BASE COURSE, 160 GYRATIONS, PG 64-22
- (D) ITEM 302007 - GRADED AGGREGATE BASE COURSE, TYPE B
- (E) ITEM 401711 - SUPERPAVE, TYPE C HOT-MIX, 160 GYRATIONS, PG 76-22 (NON-CARBONATE STONE)
- (F) ITEM 401660 - SUPERPAVE, TYPE B HOT-MIX, 160 GYRATIONS, PG 76-22
- (G) ITEM 501006 - PORTLAND CEMENT CONCRETE PAVEMENT, 12"
- (H) ITEM 732002 - TOPSOIL, 6" DEPTH
- (I) ITEM 734013 - PERMANENT GRASS SEEDING, DRY GROUND
- (K) ITEM 735533 - SOIL RETENTION BLANKET MULCH, TYPE 3
- (L) ITEM 735534 - SOIL RETENTION BLANKET MULCH, TYPE 4
- (M) ITEM 735535 - SOIL RETENTION BLANKET MULCH, TYPE 5
- (N) ITEM 209001 - BORROW, TYPE A
- (O) APPROVED PROJECT EXCAVATION MEETING BORROW, TYPE F
- (P) ITEM 715001 - PERFORATED PIPE UNDERDRAINS, 6"
- (Q) ITEM 760504 - RUMBLE STRIPS, HOT-MIX
- (R) ITEM 602772 - MECHANICALLY STABILIZED EARTH WALLS
- (S) ITEM 602773 - PCC MASONRY FOR MECHANICALLY STABILIZED EARTH WALLS
- (T) ITEM 720529 - PCC SAFETY BARRIER PERMANENT, SINGLE FACE
- (U) ITEM 720654 - PCC SAFETY BARRIER PERMANENT, SINGLE FACE, MODIFIED TYPE 1
- (V) ITEM 720587 - PCC SAFETY BARRIER PERMANENT, DOUBLE FACE, MODIFIED
- (W) ITEM 720655 - PCC SAFETY BARRIER PERMANENT, SINGLE FACE, MODIFIED TYPE 2
- (X) ITEM 712005 - RIPRAP, R-4
- (Y) ITEM 401665 - SUPERPAVE, TYPE C HOT-MIX, 160 GYRATIONS, PG 64-22, PATCHING
- (Z) ITEM 401666 - SUPERPAVE, TYPE B HOT-MIX, 160 GYRATIONS, PG 64-22, PATCHING
- (AA) ITEM 401667 - SUPERPAVE, BITUMINOUS CONCRETE BASE COURSE, 160 GYRATIONS, PG 64-22, PATCHING
- (BB) ITEM 302008 - GRADED AGGREGATE BASE COURSE, TYPE B, PATCHING
- (CC) ITEM 755000 - HOT-MIX, HOT LAID, BITUMINOUS CONCRETE CURB
- (DD) ITEM 701010 - PORTLAND CEMENT CONCRETE CURB, TYPE 1
- (EE) ITEM 701011 - PORTLAND CEMENT CONCRETE CURB, TYPE 2
- (FF) ITEM 701020 - INTEGRAL PORTLAND CEMENT CONCRETE CURB AND GUTTER, TYPE 1
- (GG) ITEM 701023 - INTEGRAL PORTLAND CEMENT CONCRETE CURB AND GUTTER, TYPE 4
- (HH) ITEM 701026 - PORTLAND CEMENT CONCRETE MONOLITHIC MEDIAN
- (II) ITEM 701027 - PORTLAND CEMENT CONCRETE CURB, TYPE 1 MODIFIED
- (JJ) ITEM 705002 - PCC SIDEWALK, 6"
- (KK) ITEM 720050 - GALVANIZED STEEL BEAM GUARDRAIL, TYPE 1
- (LL) ITEM 760507 - PROFILE MILLING, HOT-MIX
- (MM) ITEM 720656 - PCC SAFETY BARRIER PERMANENT, SINGLE FACE, MODIFIED TYPE 3
- (NN) ITEM 720657 - PCC SAFETY BARRIER PERMANENT, SINGLE FACE, MODIFIED TYPE 4
- (OO) ITEM 720651 - PCC SAFETY BARRIER PERMANENT, DOUBLE FACE, BIFURCATED TYPE 1
- (PP) ITEM 720652 - PCC SAFETY BARRIER PERMANENT, DOUBLE FACE, BIFURCATED TYPE 2
- (RR) ITEM 401668 - SUPERPAVE, TYPE C HOT-MIX, 160 GYRATIONS, PG 64-22, WEDGE
- (SS) ITEM 401669 - SUPERPAVE, TYPE B HOT-MIX, 160 GYRATIONS, PG 64-22, WEDGE
- (TT) ITEM 705001 - PCC SIDEWALK, 4"

PAVEMENT LIFT NOTE:
THE MAXIMUM LIFTS FOR THE INDIVIDUAL PAVING MATERIAL ARE AS FOLLOWS:
SUPERPAVE, TYPE C HOT-MIX - 2"
SUPERPAVE, TYPE B HOT-MIX - 3"
SUPERPAVE, BIT. CONC. BASE COURSE - 6"
GRADED AGGREGATE BASE COURSE - 8"

NOTES:
1) THE PGA IS APPLIED TO THE TOP OF THE FINAL PAVEMENT SURFACE.

9/20/2010 8:44:30 AM
M:\PROJECTS\2003\03059_DELTRNPK\SR1MALL\CADD\3009004\PLANS\TS35_RAMPR1.DGN

DELAWARE DEPARTMENT OF TRANSPORTATION	ADDENDUMS / REVISIONS	NOT TO SCALE	SR1 / I-95 INTERCHANGE - CHRISTIANA MALL ROAD BRIDGE	CONTRACT T201009004	BRIDGE NO. 1-223	TYPICAL SECTIONS	SHEET NO. 6
				COUNTY NEW CASTLE	DESIGNED BY: EGD		TOTAL SHTS. 164
					CHECKED BY: CDW		

*RAMP G1 CROSS-SLOPES				
STA.	LT. SHLD.	LANE LEFT OF ℄	LANE RIGHT OF ℄	RT. SHLD.
1340+50	-	2.00%	-2.00%	-
1340+70.57	-	2.80%	-2.80%	-

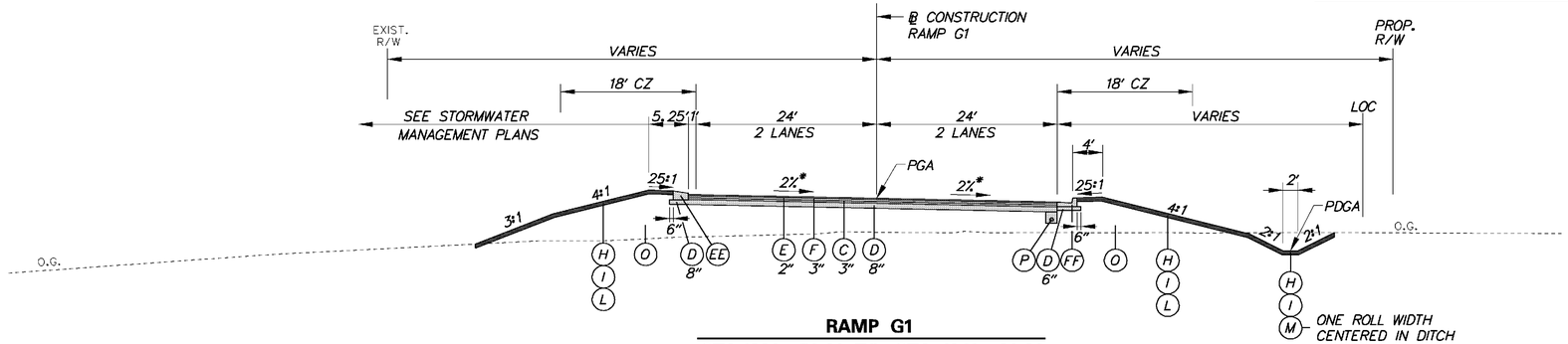

RAMP G1

STA.1339+50.00 TO STA. 1340+80.82

*RAMP G1 CROSS-SLOPES				
STA.	LT. SHLD.	LANE LEFT OF ℄	LANE RIGHT OF ℄	RT. SHLD.
1338+01.21	-	-2.00%	2.00%	-
1338+25.48	-	-1.11%	1.11%	-
1338+50	-	-0.21%	0.21%	-
1338+55.76	-	0.00%	0.00%	-
1339+00	-	1.62%	-1.62%	-
1339+10.31	-	2.00%	-2.00%	-

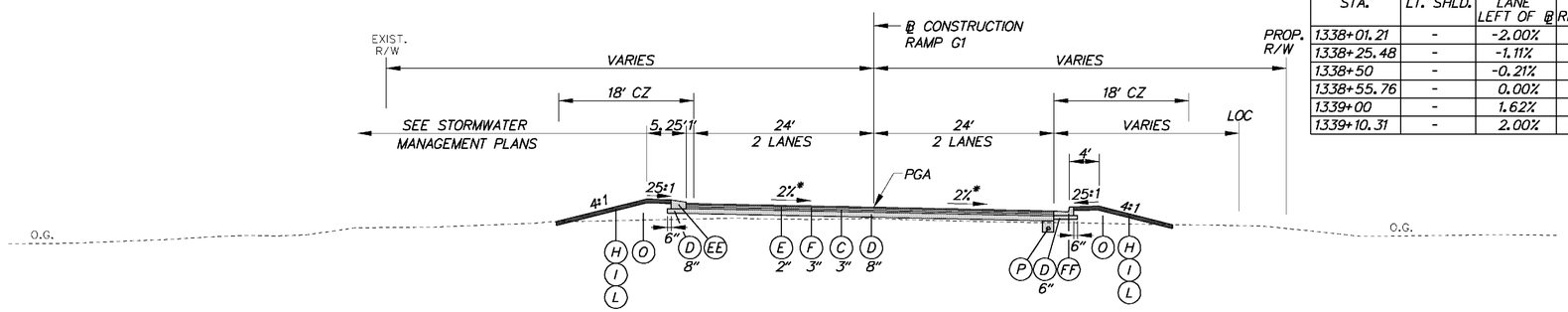

RAMP G1

STA.1337+75.45 TO STA. 1339+50.00

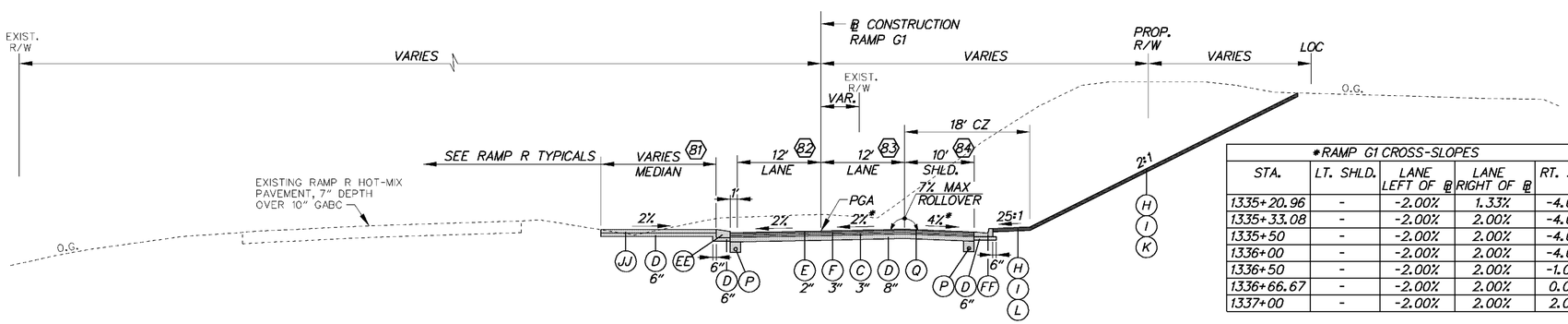

*RAMP G1 CROSS-SLOPES				
STA.	LT. SHLD.	LANE LEFT OF ℄	LANE RIGHT OF ℄	RT. SHLD.
1335+20.96	-	-2.00%	1.33%	-4.00%
1335+33.08	-	-2.00%	2.00%	-4.00%
1335+50	-	-2.00%	2.00%	-4.00%
1336+00	-	-2.00%	2.00%	-4.00%
1336+50	-	-2.00%	2.00%	-1.00%
1336+66.67	-	-2.00%	2.00%	0.00%
1337+00	-	-2.00%	2.00%	2.00%

RAMP G1

STA. 1335+20.96 TO STA. 1337+75.45

81 STA.1335+20.96 TO STA.1337+75.45
MEDIAN TAPERS 13.13' TO 10'

82 STA.1336+00.00 TO STA.1337+28.17
WIDTH TAPERS 12' TO 24'

83 STA.1336+00.00 TO STA.1337+28.17
WIDTH TAPERS 12' TO 24'

84 STA.1336+00.00 TO STA.1337+28.17
SHOULDER TAPERS 10' TO 0'
NO RUMBLE STRIPS WITHIN
THESE STATION LIMITS

LEGEND

- (A) ITEM 401708 - SUPERPAVE, TYPE C HOT-MIX, 160 GYRATIONS, PG 70-22 (NON-CARBONATE STONE)
- (B) ITEM 401654 - SUPERPAVE, TYPE B HOT-MIX, 160 GYRATIONS, PG 70-22
- (C) ITEM 401663 - SUPERPAVE, BITUMINOUS CONCRETE BASE COURSE, 160 GYRATIONS, PG 64-22
- (D) ITEM 302007 - GRADED AGGREGATE BASE COURSE, TYPE B
- (E) ITEM 401711 - SUPERPAVE, TYPE C HOT-MIX, 160 GYRATIONS, PG 76-22 (NON-CARBONATE STONE)
- (F) ITEM 401660 - SUPERPAVE, TYPE B HOT-MIX, 160 GYRATIONS, PG 76-22
- (G) ITEM 501006 - PORTLAND CEMENT CONCRETE PAVEMENT, 12"
- (H) ITEM 732002 - TOPSOIL, 6" DEPTH
- (I) ITEM 734013 - PERMANENT GRASS SEEDING, DRY GROUND
- (K) ITEM 735533 - SOIL RETENTION BLANKET MULCH, TYPE 3
- (L) ITEM 735534 - SOIL RETENTION BLANKET MULCH, TYPE 4
- (M) ITEM 735535 - SOIL RETENTION BLANKET MULCH, TYPE 5
- (N) ITEM 209001 - BORROW, TYPE A
- (O) APPROVED PROJECT EXCAVATION MEETING BORROW, TYPE F
- (P) ITEM 715001 - PERFORATED PIPE UNDERDRAINS, 6"
- (Q) ITEM 760504 - RUMBLE STRIPS, HOT-MIX
- (R) ITEM 602772 - MECHANICALLY STABILIZED EARTH WALLS
- (S) ITEM 602773 - PCC MASONRY FOR MECHANICALLY STABILIZED EARTH WALLS
- (T) ITEM 720529 - PCC SAFETY BARRIER PERMANENT, SINGLE FACE
- (U) ITEM 720654 - PCC SAFETY BARRIER PERMANENT, SINGLE FACE, MODIFIED TYPE 1
- (V) ITEM 720587 - PCC SAFETY BARRIER PERMANENT, DOUBLE FACE, MODIFIED
- (W) ITEM 720655 - PCC SAFETY BARRIER PERMANENT, SINGLE FACE, MODIFIED TYPE 2
- (X) ITEM 712005 - RIPRAP, R-4
- (Y) ITEM 401665 - SUPERPAVE, TYPE C HOT-MIX, 160 GYRATIONS, PG 64-22, PATCHING
- (Z) ITEM 401666 - SUPERPAVE, TYPE B HOT-MIX, 160 GYRATIONS, PG 64-22, PATCHING
- (AA) ITEM 401667 - SUPERPAVE, BITUMINOUS CONCRETE BASE COURSE, 160 GYRATIONS, PG 64-22, PATCHING
- (BB) ITEM 302008 - GRADED AGGREGATE BASE COURSE, TYPE B, PATCHING
- (CC) ITEM 755000 - HOT-MIX, HOT LAID, BITUMINOUS CONCRETE CURB
- (DD) ITEM 701010 - PORTLAND CEMENT CONCRETE CURB, TYPE 1
- (EE) ITEM 701011 - PORTLAND CEMENT CONCRETE CURB, TYPE 2
- (FF) ITEM 701020 - INTEGRAL PORTLAND CEMENT CONCRETE CURB AND GUTTER, TYPE 1
- (GG) ITEM 701023 - INTEGRAL PORTLAND CEMENT CONCRETE CURB AND GUTTER, TYPE 4
- (HH) ITEM 701026 - PORTLAND CEMENT CONCRETE MONOLITHIC MEDIAN
- (II) ITEM 701027 - PORTLAND CEMENT CONCRETE CURB, TYPE 1 MODIFIED
- (JJ) ITEM 705002 - PCC SIDEWALK, 6"
- (KK) ITEM 720050 - GALVANIZED STEEL BEAM GUARDRAIL, TYPE 1
- (LL) ITEM 760507 - PROFILE MILLING, HOT-MIX
- (MM) ITEM 720656 - PCC SAFETY BARRIER PERMANENT, SINGLE FACE, MODIFIED TYPE 3
- (NN) ITEM 720657 - PCC SAFETY BARRIER PERMANENT, SINGLE FACE, MODIFIED TYPE 4
- (OO) ITEM 720651 - PCC SAFETY BARRIER PERMANENT, DOUBLE FACE, BIFURCATED TYPE 1
- (PP) ITEM 720652 - PCC SAFETY BARRIER PERMANENT, DOUBLE FACE, BIFURCATED TYPE 2
- (RR) ITEM 401668 - SUPERPAVE, TYPE C HOT-MIX, 160 GYRATIONS, PG 64-22, WEDGE
- (SS) ITEM 401669 - SUPERPAVE, TYPE B HOT-MIX, 160 GYRATIONS, PG 64-22, WEDGE
- (TT) ITEM 705001 - PCC SIDEWALK, 4"

PAVEMENT LIFT NOTE:
THE MAXIMUM LIFTS FOR THE INDIVIDUAL PAVING MATERIAL ARE AS FOLLOWS:
SUPERPAVE, TYPE C HOT-MIX - 2"
SUPERPAVE, TYPE B HOT-MIX - 3"
SUPERPAVE, BIT. CONC. BASE COURSE - 6"
GRADED AGGREGATE BASE COURSE - 8"

NOTES:
1) THE PGA IS APPLIED TO THE TOP OF THE FINAL PAVEMENT SURFACE.

9/20/2010 9:01:42 AM
M:\PROJECTS\2003\03059_DELTRNPK\SR1MALL\CADD\3009004\PLANS\TS36_RAMPR1.DGN

DELAWARE DEPARTMENT OF TRANSPORTATION	ADDENDUMS / REVISIONS	NOT TO SCALE	SR1/I-95 INTERCHANGE - CHRISTIANA MALL ROAD BRIDGE	CONTRACT T201009004	BRIDGE NO. 1-223	TYPICAL SECTIONS	SHEET NO. 7
				COUNTY NEW CASTLE	DESIGNED BY: EGD		TOTAL SHTS. 164
					CHECKED BY: CDW		

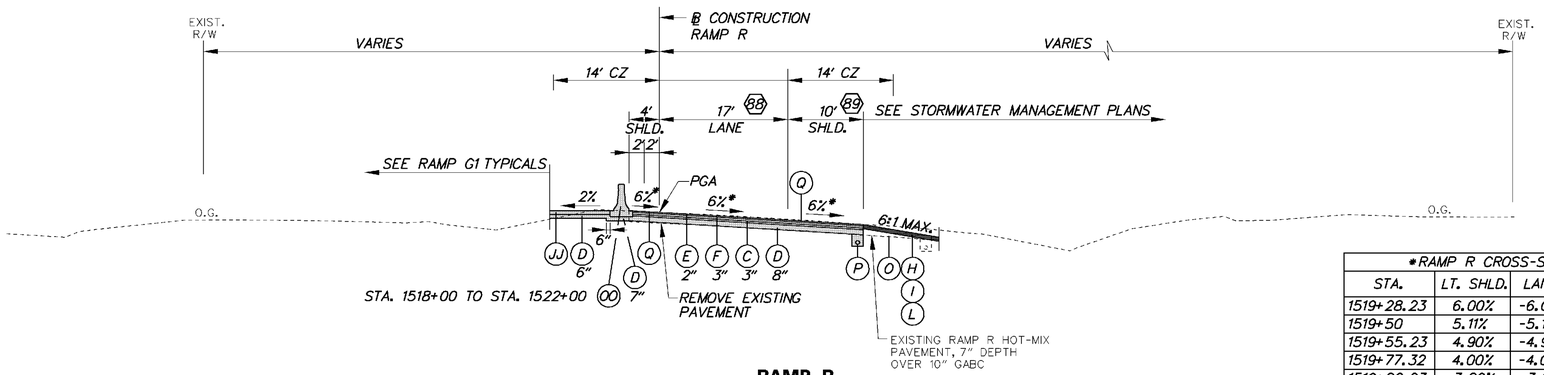

RAMP R

STA. 1518+50.00 TO STA. 1522+00.00

BB STA.1519+01.70 TO STA.1519+73.81
WIDTH TAPERS 17' TO 15'

*RAMP R CROSS-SLOPES			
STA.	LT. SHLD.	LANES	RT. SHLD.
1519+28.23	6.00%	-6.00%	-6.00%
1519+50	5.11%	-5.11%	-5.11%
1519+55.23	4.90%	-4.90%	-4.90%
1519+77.32	4.00%	-4.00%	-4.00%
1519+82.23	3.80%	-3.80%	-4.00%

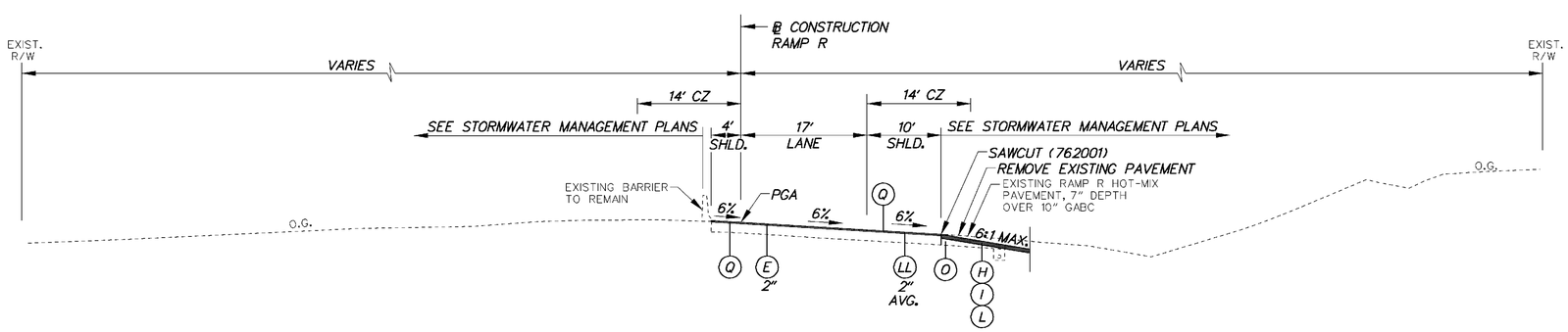

RAMP R

STA. 1515+50.00 TO STA. 1518+50.00

LEGEND

- (A) ITEM 401708 - SUPERPAVE, TYPE C HOT-MIX, 160 GYRATIONS, PG 70-22 (NON-CARBONATE STONE)
- (B) ITEM 401654 - SUPERPAVE, TYPE B HOT-MIX, 160 GYRATIONS, PG 70-22
- (C) ITEM 401663 - SUPERPAVE, BITUMINOUS CONCRETE BASE COURSE, 160 GYRATIONS, PG 64-22
- (D) ITEM 302007 - GRADED AGGREGATE BASE COURSE, TYPE B
- (E) ITEM 401711 - SUPERPAVE, TYPE C HOT-MIX, 160 GYRATIONS, PG 76-22 (NON-CARBONATE STONE)
- (F) ITEM 401660 - SUPERPAVE, TYPE B HOT-MIX, 160 GYRATIONS, PG 76-22
- (G) ITEM 501006 - PORTLAND CEMENT CONCRETE PAVEMENT, 12"
- (H) ITEM 732002 - TOPSOIL, 6" DEPTH
- (I) ITEM 734013 - PERMANENT GRASS SEEDING, DRY GROUND
- (K) ITEM 735533 - SOIL RETENTION BLANKET MULCH, TYPE 3
- (L) ITEM 735534 - SOIL RETENTION BLANKET MULCH, TYPE 4
- (M) ITEM 735535 - SOIL RETENTION BLANKET MULCH, TYPE 5
- (N) ITEM 209001 - BORROW, TYPE A
- (O) APPROVED PROJECT EXCAVATION MEETING BORROW, TYPE F
- (P) ITEM 715001 - PERFORATED PIPE UNDERDRAINS, 6"
- (Q) ITEM 760504 - RUMBLE STRIPS, HOT-MIX
- (R) ITEM 602772 - MECHANICALLY STABILIZED EARTH WALLS
- (S) ITEM 602773 - PCC MASONRY FOR MECHANICALLY STABILIZED EARTH WALLS
- (T) ITEM 720529 - PCC SAFETY BARRIER PERMANENT, SINGLE FACE
- (U) ITEM 720654 - PCC SAFETY BARRIER PERMANENT, SINGLE FACE, MODIFIED TYPE 1
- (V) ITEM 720587 - PCC SAFETY BARRIER PERMANENT, DOUBLE FACE, MODIFIED
- (W) ITEM 720655 - PCC SAFETY BARRIER PERMANENT, SINGLE FACE, MODIFIED TYPE 2
- (X) ITEM 712005 - RIPRAP, R-4
- (Y) ITEM 401665 - SUPERPAVE, TYPE C HOT-MIX, 160 GYRATIONS, PG 64-22, PATCHING
- (Z) ITEM 401666 - SUPERPAVE, TYPE B HOT-MIX, 160 GYRATIONS, PG 64-22, PATCHING
- (AA) ITEM 401667 - SUPERPAVE, BITUMINOUS CONCRETE BASE COURSE, 160 GYRATIONS, PG 64-22, PATCHING
- (BB) ITEM 302008 - GRADED AGGREGATE BASE COURSE, TYPE B, PATCHING
- (CC) ITEM 755000 - HOT-MIX, HOT LAID, BITUMINOUS CONCRETE CURB
- (DD) ITEM 701010 - PORTLAND CEMENT CONCRETE CURB, TYPE 1
- (EE) ITEM 701011 - PORTLAND CEMENT CONCRETE CURB, TYPE 2
- (FF) ITEM 701020 - INTEGRAL PORTLAND CEMENT CONCRETE CURB AND GUTTER, TYPE 1
- (GG) ITEM 701023 - INTEGRAL PORTLAND CEMENT CONCRETE CURB AND GUTTER, TYPE 4
- (HH) ITEM 701026 - PORTLAND CEMENT CONCRETE MONOLITHIC MEDIAN
- (II) ITEM 701027 - PORTLAND CEMENT CONCRETE CURB, TYPE 1 MODIFIED
- (JJ) ITEM 705002 - PCC SIDEWALK, 6"
- (KK) ITEM 720050 - GALVANIZED STEEL BEAM GUARDRAIL, TYPE 1
- (LL) ITEM 760507 - PROFILE MILLING, HOT-MIX
- (MM) ITEM 720656 - PCC SAFETY BARRIER PERMANENT, SINGLE FACE, MODIFIED TYPE 3
- (NN) ITEM 720657 - PCC SAFETY BARRIER PERMANENT, SINGLE FACE, MODIFIED TYPE 4
- (OO) ITEM 720651 - PCC SAFETY BARRIER PERMANENT, DOUBLE FACE, BIFURCATED TYPE 1
- (PP) ITEM 720652 - PCC SAFETY BARRIER PERMANENT, DOUBLE FACE, BIFURCATED TYPE 2
- (RR) ITEM 401668 - SUPERPAVE, TYPE C HOT-MIX, 160 GYRATIONS, PG 64-22, WEDGE
- (SS) ITEM 401669 - SUPERPAVE, TYPE B HOT-MIX, 160 GYRATIONS, PG 64-22, WEDGE
- (TT) ITEM 705001 - PCC SIDEWALK, 4"

PAVEMENT LIFT NOTE:
THE MAXIMUM LIFTS FOR THE INDIVIDUAL PAVING MATERIAL ARE AS FOLLOWS:
SUPERPAVE, TYPE C HOT-MIX - 2"
SUPERPAVE, TYPE B HOT-MIX - 3"
SUPERPAVE, BIT. CONC. BASE COURSE - 6"
GRADED AGGREGATE BASE COURSE - 8"

NOTES:
1) THE PGA IS APPLIED TO THE TOP OF THE FINAL PAVEMENT SURFACE.

8/13/2010 12:19:08 PM
M:\PROJECTS\2003\03059_DELTRNPK\SRIMALL\CADD\3009004\PLANS\TS38_RAMPR1.DGN

DELAWARE DEPARTMENT OF TRANSPORTATION	ADDENDUMS / REVISIONS	NOT TO SCALE	SR1/I-95 INTERCHANGE - CHRISTIANA MALL ROAD BRIDGE	CONTRACT T201009004	BRIDGE NO. 1-223	TYPICAL SECTIONS	SHEET NO. 8
				COUNTY NEW CASTLE	DESIGNED BY: EGD		TOTAL SHTS. 164
					CHECKED BY: CDW		

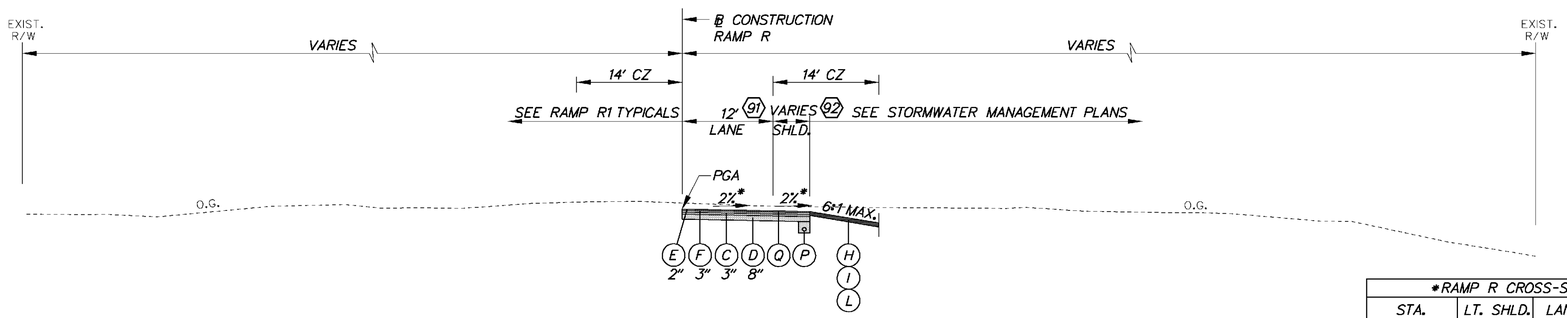

RAMP R

STA. 1523+00.75 TO STA. 1524+90.96

(91) STA. 1523+00.75 TO STA. 1523+66.39
WIDTH TAPERS 14.13' TO 12'

(92) STA. 1523+66.39 TO STA. 1524+90.96
SHOULDER TAPERS 6' TO 2'
NO RUMBLE STRIPS WITHIN THESE
STATION LIMITS

*RAMP R CROSS-SLOPES			
STA.	LT. SHLD.	LANES	RT. SHLD.
1522+33.39	6.00%	-6.00%	-6.00%
1522+50	5.23%	-5.23%	-5.23%
1522+76.39	4.00%	-4.00%	-4.00%
1523+00	2.90%	-2.90%	-2.90%
1523+19.39	-	-2.00%	-2.00%

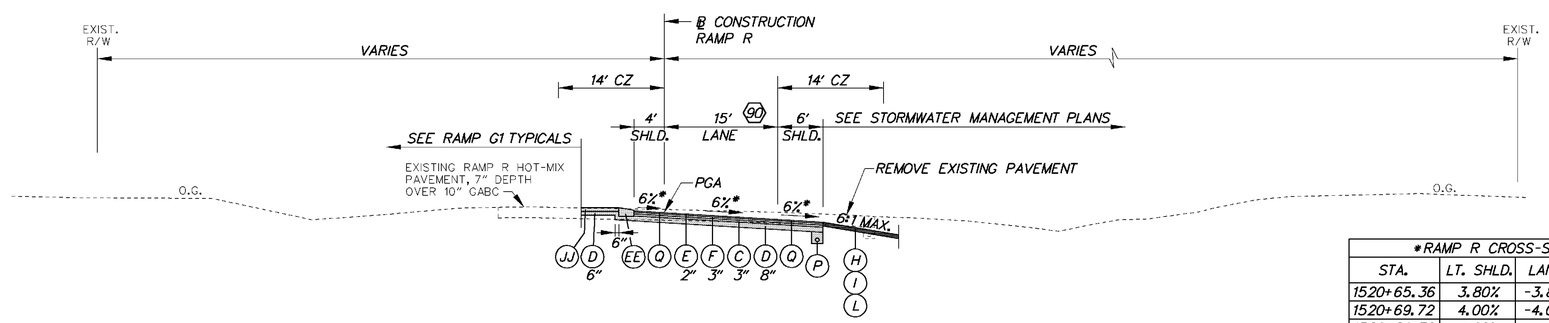

RAMP R

STA. 1522+00.00 TO STA. 1523+00.75

(90) STA. 1522+71.04 TO STA. 1523+00.75
WIDTH TAPERS 15' TO 14.13'

*RAMP R CROSS-SLOPES			
STA.	LT. SHLD.	LANES	RT. SHLD.
1520+65.36	3.80%	-3.80%	-4.00%
1520+69.72	4.00%	-4.00%	-4.00%
1520+89.36	4.90%	-4.90%	-4.90%
1521+00	5.39%	-5.39%	-5.39%
1521+13.36	6.00%	-6.00%	-6.00%

LEGEND

- (A) ITEM 401708 - SUPERPAVE, TYPE C HOT-MIX, 160 GYRATIONS, PG 70-22 (NON-CARBONATE STONE)
- (B) ITEM 401654 - SUPERPAVE, TYPE B HOT-MIX, 160 GYRATIONS, PG 70-22
- (C) ITEM 401663 - SUPERPAVE, BITUMINOUS CONCRETE BASE COURSE, 160 GYRATIONS, PG 64-22
- (D) ITEM 302007 - GRADED AGGREGATE BASE COURSE, TYPE B
- (E) ITEM 401711 - SUPERPAVE, TYPE C HOT-MIX, 160 GYRATIONS, PG 76-22 (NON-CARBONATE STONE)
- (F) ITEM 401660 - SUPERPAVE, TYPE B HOT-MIX, 160 GYRATIONS, PG 76-22
- (G) ITEM 501006 - PORTLAND CEMENT CONCRETE PAVEMENT, 12"
- (H) ITEM 732002 - TOPSOIL, 6" DEPTH
- (I) ITEM 734013 - PERMANENT GRASS SEEDING, DRY GROUND
- (K) ITEM 735533 - SOIL RETENTION BLANKET MULCH, TYPE 3
- (L) ITEM 735534 - SOIL RETENTION BLANKET MULCH, TYPE 4
- (M) ITEM 735535 - SOIL RETENTION BLANKET MULCH, TYPE 5
- (N) ITEM 209001 - BORROW, TYPE A
- (O) APPROVED PROJECT EXCAVATION MEETING BORROW, TYPE F
- (P) ITEM 715001 - PERFORATED PIPE UNDERDRAINS, 6"
- (Q) ITEM 760504 - RUMBLE STRIPS, HOT-MIX
- (R) ITEM 602772 - MECHANICALLY STABILIZED EARTH WALLS
- (S) ITEM 602773 - PCC MASONRY FOR MECHANICALLY STABILIZED EARTH WALLS
- (T) ITEM 720529 - PCC SAFETY BARRIER PERMANENT, SINGLE FACE
- (U) ITEM 720654 - PCC SAFETY BARRIER PERMANENT, SINGLE FACE, MODIFIED TYPE 1
- (V) ITEM 720587 - PCC SAFETY BARRIER PERMANENT, DOUBLE FACE, MODIFIED
- (W) ITEM 720655 - PCC SAFETY BARRIER PERMANENT, SINGLE FACE, MODIFIED TYPE 2
- (X) ITEM 712005 - RIPRAP, R-4
- (Y) ITEM 401665 - SUPERPAVE, TYPE C HOT-MIX, 160 GYRATIONS, PG 64-22, PATCHING
- (Z) ITEM 401666 - SUPERPAVE, TYPE B HOT-MIX, 160 GYRATIONS, PG 64-22, PATCHING
- (AA) ITEM 401667 - SUPERPAVE, BITUMINOUS CONCRETE BASE COURSE, 160 GYRATIONS, PG 64-22, PATCHING
- (BB) ITEM 302008 - GRADED AGGREGATE BASE COURSE, TYPE B, PATCHING
- (CC) ITEM 755000 - HOT-MIX, HOT LAID, BITUMINOUS CONCRETE CURB
- (DD) ITEM 701010 - PORTLAND CEMENT CONCRETE CURB, TYPE 1
- (EE) ITEM 701011 - PORTLAND CEMENT CONCRETE CURB, TYPE 2
- (FF) ITEM 701020 - INTEGRAL PORTLAND CEMENT CONCRETE CURB AND GUTTER, TYPE 1
- (GG) ITEM 701023 - INTEGRAL PORTLAND CEMENT CONCRETE CURB AND GUTTER, TYPE 4
- (HH) ITEM 701026 - PORTLAND CEMENT CONCRETE MONOLITHIC MEDIAN
- (II) ITEM 701027 - PORTLAND CEMENT CONCRETE CURB, TYPE 1 MODIFIED
- (JJ) ITEM 705002 - PCC SIDEWALK, 6"
- (KK) ITEM 720050 - GALVANIZED STEEL BEAM GUARDRAIL, TYPE 1
- (LL) ITEM 760507 - PROFILE MILLING, HOT-MIX
- (MM) ITEM 720656 - PCC SAFETY BARRIER PERMANENT, SINGLE FACE, MODIFIED TYPE 3
- (NN) ITEM 720657 - PCC SAFETY BARRIER PERMANENT, SINGLE FACE, MODIFIED TYPE 4
- (OO) ITEM 720651 - PCC SAFETY BARRIER PERMANENT, DOUBLE FACE, BIFURCATED TYPE 1
- (PP) ITEM 720652 - PCC SAFETY BARRIER PERMANENT, DOUBLE FACE, BIFURCATED TYPE 2
- (RR) ITEM 401668 - SUPERPAVE, TYPE C HOT-MIX, 160 GYRATIONS, PG 64-22, WEDGE
- (SS) ITEM 401669 - SUPERPAVE, TYPE B HOT-MIX, 160 GYRATIONS, PG 64-22, WEDGE
- (TT) ITEM 705001 - PCC SIDEWALK, 4"

PAVEMENT LIFT NOTE:
THE MAXIMUM LIFTS FOR THE INDIVIDUAL PAVING MATERIAL ARE AS FOLLOWS:
SUPERPAVE, TYPE C HOT-MIX - 2"
SUPERPAVE, TYPE B HOT-MIX - 3"
SUPERPAVE, BIT. CONC. BASE COURSE - 6"
GRADED AGGREGATE BASE COURSE - 8"

NOTES:
1) THE PGA IS APPLIED TO THE TOP OF THE FINAL PAVEMENT SURFACE.

8/11/2010 11:15:08 AM
M:\PROJECTS\2003\03059_DELTRNPK\SRIMALL\CADD\3009004\PLANS\TS39_RAMPR1.DGN

DELAWARE DEPARTMENT OF TRANSPORTATION	ADDENDUMS / REVISIONS	NOT TO SCALE	SR1/I-95 INTERCHANGE - CHRISTIANA MALL ROAD BRIDGE	CONTRACT T201009004	BRIDGE NO. 1-223	TYPICAL SECTIONS	SHEET NO. 9
				COUNTY NEW CASTLE	DESIGNED BY: EGD		TOTAL SHTS. 164
					CHECKED BY: CDW		

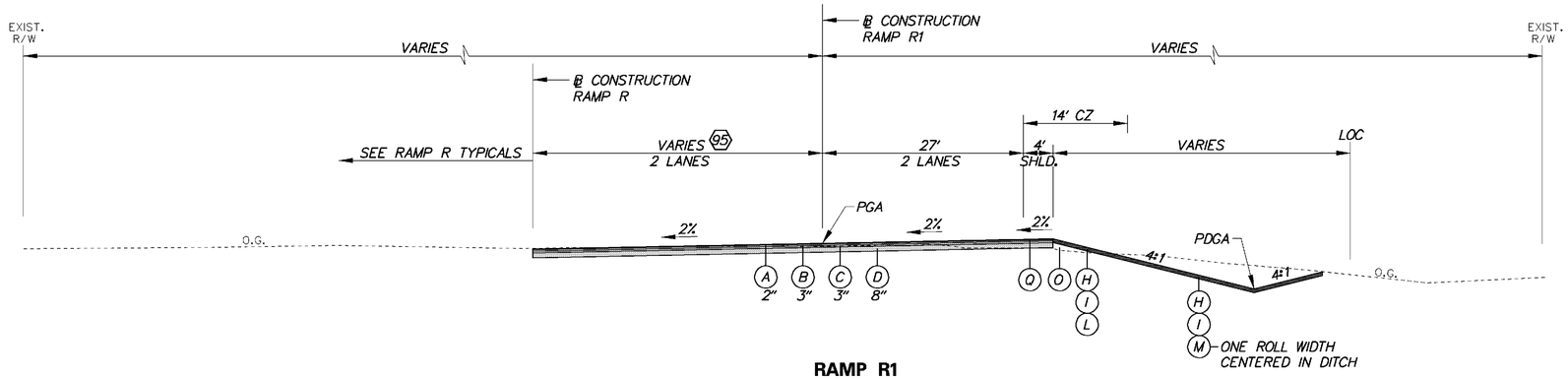

RAMP R1

STA. 105+24.81 TO STA. 105+61.52

95 STA. 105+24.81 TO STA. 105+61.52
WIDTH TAPERS FROM 37.2' TO 39.68'

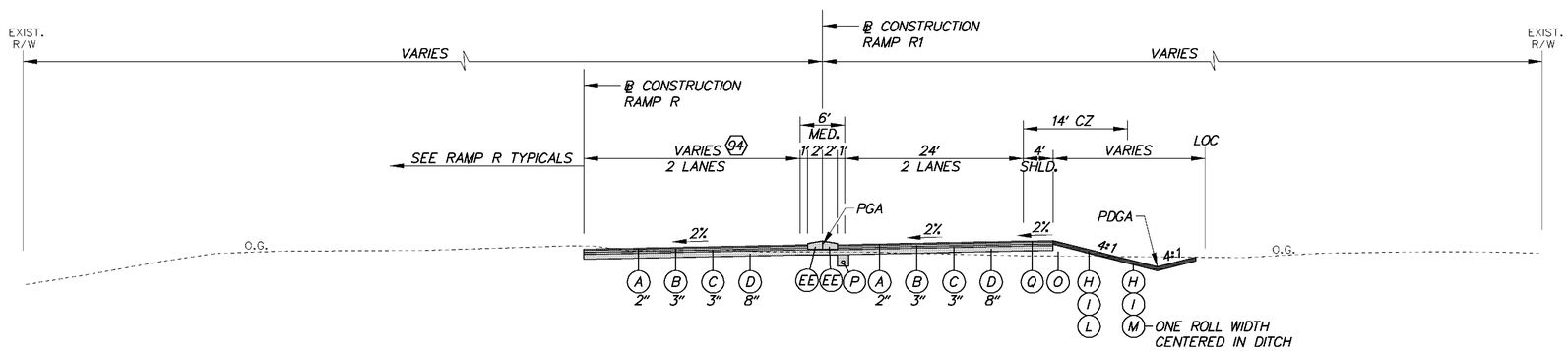

RAMP R1

STA. 103+75.81 TO STA. 105+24.81

94 STA. 103+69.14 TO STA. 105+24.81
WIDTH TAPERS FROM 24' TO 36.2'

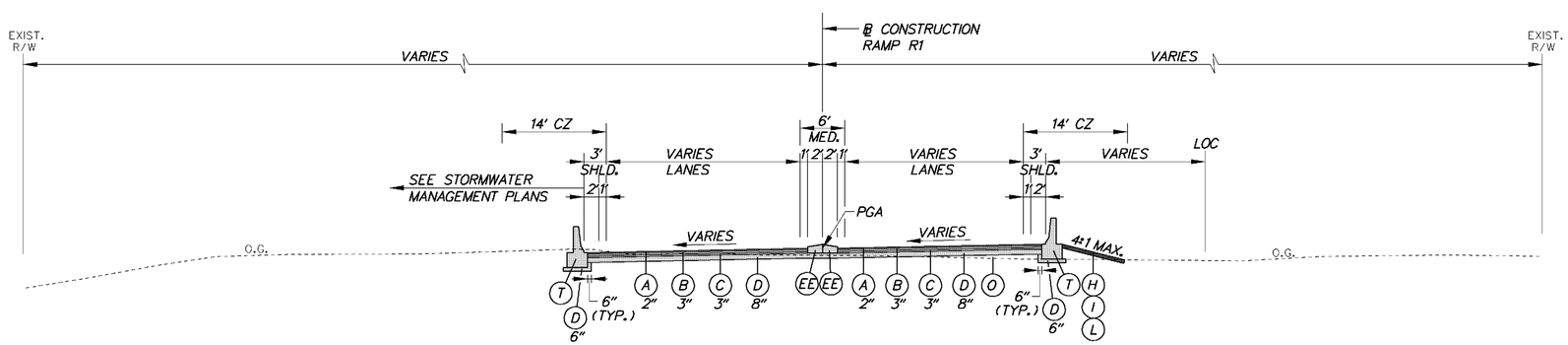

RAMP R1

STA. 100+44.19 TO STA. 100+86.60

LEGEND

- (A) ITEM 401708 - SUPERPAVE, TYPE C HOT-MIX, 160 GYRATIONS, PG 70-22 (NON-CARBONATE STONE)
- (B) ITEM 401654 - SUPERPAVE, TYPE B HOT-MIX, 160 GYRATIONS, PG 70-22
- (C) ITEM 401663 - SUPERPAVE, BITUMINOUS CONCRETE BASE COURSE, 160 GYRATIONS, PG 64-22
- (D) ITEM 302007 - GRADED AGGREGATE BASE COURSE, TYPE B
- (E) ITEM 401711 - SUPERPAVE, TYPE C HOT-MIX, 160 GYRATIONS, PG 76-22 (NON-CARBONATE STONE)
- (F) ITEM 401660 - SUPERPAVE, TYPE B HOT-MIX, 160 GYRATIONS, PG 76-22
- (G) ITEM 501006 - PORTLAND CEMENT CONCRETE PAVEMENT, 12"
- (H) ITEM 732002 - TOPSOIL, 6" DEPTH
- (I) ITEM 734013 - PERMANENT GRASS SEEDING, DRY GROUND
- (K) ITEM 735533 - SOIL RETENTION BLANKET MULCH, TYPE 3
- (L) ITEM 735534 - SOIL RETENTION BLANKET MULCH, TYPE 4
- (M) ITEM 735535 - SOIL RETENTION BLANKET MULCH, TYPE 5
- (N) ITEM 209001 - BORROW, TYPE A
- (O) APPROVED PROJECT EXCAVATION MEETING BORROW, TYPE F
- (P) ITEM 715001 - PERFORATED PIPE UNDERDRAINS, 6"
- (Q) ITEM 760504 - RUMBLE STRIPS, HOT-MIX
- (R) ITEM 602772 - MECHANICALLY STABILIZED EARTH WALLS
- (S) ITEM 602773 - PCC MASONRY FOR MECHANICALLY STABILIZED EARTH WALLS
- (T) ITEM 720529 - PCC SAFETY BARRIER PERMANENT, SINGLE FACE
- (U) ITEM 720654 - PCC SAFETY BARRIER PERMANENT, SINGLE FACE, MODIFIED TYPE 1
- (V) ITEM 720587 - PCC SAFETY BARRIER PERMANENT, DOUBLE FACE, MODIFIED
- (W) ITEM 720655 - PCC SAFETY BARRIER PERMANENT, SINGLE FACE, MODIFIED TYPE 2
- (X) ITEM 712005 - RIPRAP, R-4
- (Y) ITEM 401665 - SUPERPAVE, TYPE C HOT-MIX, 160 GYRATIONS, PG 64-22, PATCHING
- (Z) ITEM 401666 - SUPERPAVE, TYPE B HOT-MIX, 160 GYRATIONS, PG 64-22, PATCHING
- (AA) ITEM 401667 - SUPERPAVE, BITUMINOUS CONCRETE BASE COURSE, 160 GYRATIONS, PG 64-22, PATCHING
- (BB) ITEM 302008 - GRADED AGGREGATE BASE COURSE, TYPE B, PATCHING
- (CC) ITEM 755000 - HOT-MIX, HOT LAID, BITUMINOUS CONCRETE CURB
- (DD) ITEM 701010 - PORTLAND CEMENT CONCRETE CURB, TYPE 1
- (EE) ITEM 701011 - PORTLAND CEMENT CONCRETE CURB, TYPE 2
- (FF) ITEM 701020 - INTEGRAL PORTLAND CEMENT CONCRETE CURB AND GUTTER, TYPE 1
- (GG) ITEM 701023 - INTEGRAL PORTLAND CEMENT CONCRETE CURB AND GUTTER, TYPE 4
- (HH) ITEM 701026 - PORTLAND CEMENT CONCRETE MONOLITHIC MEDIAN
- (II) ITEM 701027 - PORTLAND CEMENT CONCRETE CURB, TYPE 1 MODIFIED
- (JJ) ITEM 705002 - PCC SIDEWALK, 6"
- (KK) ITEM 720050 - GALVANIZED STEEL BEAM GUARDRAIL, TYPE 1
- (LL) ITEM 760507 - PROFILE MILLING, HOT-MIX
- (MM) ITEM 720656 - PCC SAFETY BARRIER PERMANENT, SINGLE FACE, MODIFIED TYPE 3
- (NN) ITEM 720657 - PCC SAFETY BARRIER PERMANENT, SINGLE FACE, MODIFIED TYPE 4
- (OO) ITEM 720651 - PCC SAFETY BARRIER PERMANENT, DOUBLE FACE, BIFURCATED TYPE 1
- (PP) ITEM 720652 - PCC SAFETY BARRIER PERMANENT, DOUBLE FACE, BIFURCATED TYPE 2
- (RR) ITEM 401668 - SUPERPAVE, TYPE C HOT-MIX, 160 GYRATIONS, PG 64-22, WEDGE
- (SS) ITEM 401669 - SUPERPAVE, TYPE B HOT-MIX, 160 GYRATIONS, PG 64-22, WEDGE
- (TT) ITEM 705001 - PCC SIDEWALK, 4"

PAVEMENT LIFT NOTE:
THE MAXIMUM LIFTS FOR THE INDIVIDUAL PAVING MATERIAL ARE AS FOLLOWS:
SUPERPAVE, TYPE C HOT-MIX - 2"
SUPERPAVE, TYPE B HOT-MIX - 3"
SUPERPAVE, BIT. CONC. BASE COURSE - 6"
GRADED AGGREGATE BASE COURSE - 8"

NOTES:
1) THE PGA IS APPLIED TO THE TOP OF THE FINAL PAVEMENT SURFACE.

9/16/2010 2:59:31 PM
M:\PROJECTS\2003\03059_DELTRNPK\SRIMALL\CADD\3009004\PLANS\TS40_RAMPR1.DGN

DELAWARE DEPARTMENT OF TRANSPORTATION	ADDENDUMS / REVISIONS	NOT TO SCALE	SR1/I-95 INTERCHANGE - CHRISTIANA MALL ROAD BRIDGE	CONTRACT T201009004	BRIDGE NO. 1-223	TYPICAL SECTIONS	SHEET NO. 10
				COUNTY NEW CASTLE	DESIGNED BY: EGD		TOTAL SHTS. 164
					CHECKED BY: CDW		

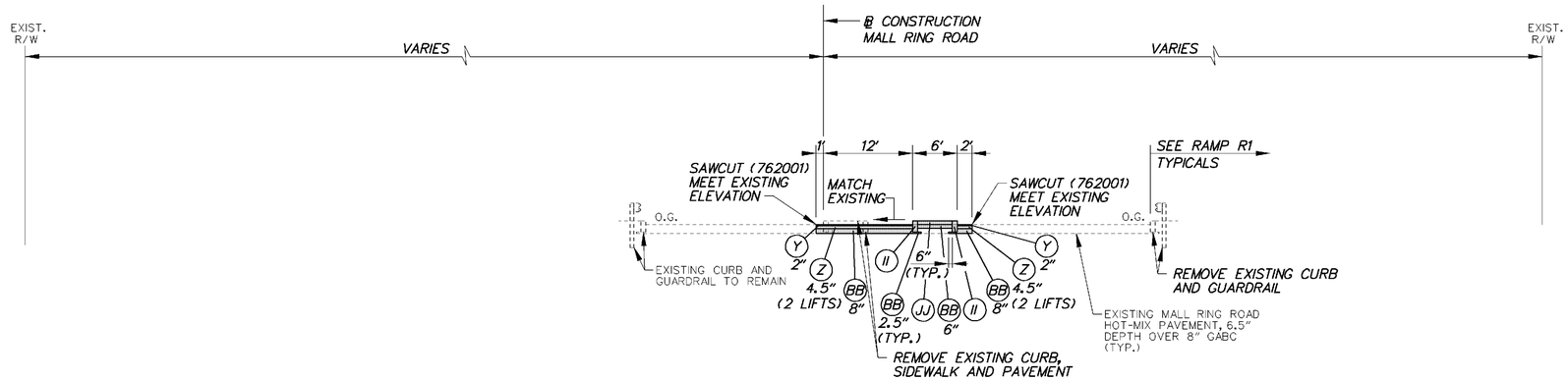

MALL RING ROAD

STA. 31+78.57 TO STA. 32+55.50

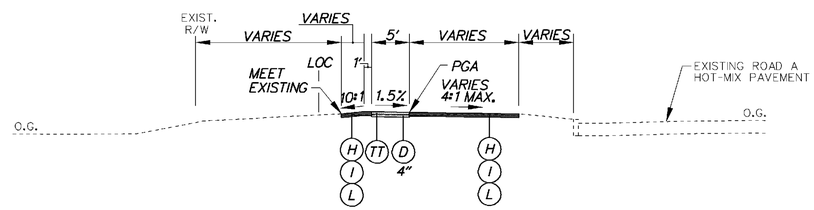

ROAD A SIDEWALK IN FILL

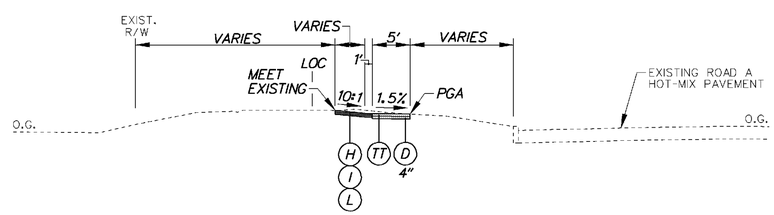

ROAD A SIDEWALK IN CUT

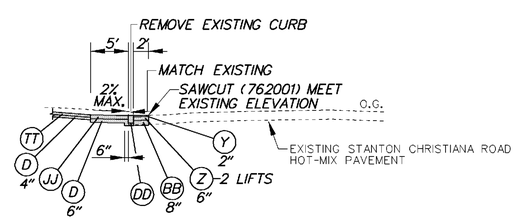

ROAD A /STANTON CHRISTIANA ROAD SOUTHEAST CORNER CURB RAMP

LEGEND

- (A) ITEM 401708 - SUPERPAVE, TYPE C HOT-MIX, 160 GYRATIONS, PG 70-22 (NON-CARBONATE STONE)
- (B) ITEM 401654 - SUPERPAVE, TYPE B HOT-MIX, 160 GYRATIONS, PG 70-22
- (C) ITEM 401663 - SUPERPAVE, BITUMINOUS CONCRETE BASE COURSE, 160 GYRATIONS, PG 64-22
- (D) ITEM 302007 - GRADED AGGREGATE BASE COURSE, TYPE B
- (E) ITEM 401711 - SUPERPAVE, TYPE C HOT-MIX, 160 GYRATIONS, PG 76-22 (NON-CARBONATE STONE)
- (F) ITEM 401660 - SUPERPAVE, TYPE B HOT-MIX, 160 GYRATIONS, PG 76-22
- (G) ITEM 501006 - PORTLAND CEMENT CONCRETE PAVEMENT, 12"
- (H) ITEM 732002 - TOPSOIL, 6" DEPTH
- (I) ITEM 734013 - PERMANENT GRASS SEEDING, DRY GROUND
- (K) ITEM 735533 - SOIL RETENTION BLANKET MULCH, TYPE 3
- (L) ITEM 735534 - SOIL RETENTION BLANKET MULCH, TYPE 4
- (M) ITEM 735535 - SOIL RETENTION BLANKET MULCH, TYPE 5
- (N) ITEM 209001 - BORROW, TYPE A
- (O) APPROVED PROJECT EXCAVATION MEETING BORROW, TYPE F
- (P) ITEM 715001 - PERFORATED PIPE UNDERDRAINS, 6"
- (Q) ITEM 760504 - RUMBLE STRIPS, HOT-MIX
- (R) ITEM 602772 - MECHANICALLY STABILIZED EARTH WALLS
- (S) ITEM 602773 - PCC MASONRY FOR MECHANICALLY STABILIZED EARTH WALLS
- (T) ITEM 720529 - PCC SAFETY BARRIER PERMANENT, SINGLE FACE
- (U) ITEM 720654 - PCC SAFETY BARRIER PERMANENT, SINGLE FACE, MODIFIED TYPE 1
- (V) ITEM 720587 - PCC SAFETY BARRIER PERMANENT, DOUBLE FACE, MODIFIED
- (W) ITEM 720655 - PCC SAFETY BARRIER PERMANENT, SINGLE FACE, MODIFIED TYPE 2
- (X) ITEM 712005 - RIPRAP, R-4
- (Y) ITEM 401665 - SUPERPAVE, TYPE C HOT-MIX, 160 GYRATIONS, PG 64-22, PATCHING
- (Z) ITEM 401666 - SUPERPAVE, TYPE B HOT-MIX, 160 GYRATIONS, PG 64-22, PATCHING
- (AA) ITEM 401667 - SUPERPAVE, BITUMINOUS CONCRETE BASE COURSE, 160 GYRATIONS, PG 64-22, PATCHING
- (BB) ITEM 302008 - GRADED AGGREGATE BASE COURSE, TYPE B, PATCHING
- (CC) ITEM 755000 - HOT-MIX, HOT LAID, BITUMINOUS CONCRETE CURB
- (DD) ITEM 701010 - PORTLAND CEMENT CONCRETE CURB, TYPE 1
- (EE) ITEM 701011 - PORTLAND CEMENT CONCRETE CURB, TYPE 2
- (FF) ITEM 701020 - INTEGRAL PORTLAND CEMENT CONCRETE CURB AND GUTTER, TYPE 1
- (GG) ITEM 701023 - INTEGRAL PORTLAND CEMENT CONCRETE CURB AND GUTTER, TYPE 4
- (HH) ITEM 701026 - PORTLAND CEMENT CONCRETE MONOLITHIC MEDIAN
- (II) ITEM 701027 - PORTLAND CEMENT CONCRETE CURB, TYPE 1 MODIFIED
- (JJ) ITEM 705002 - PCC SIDEWALK, 6"
- (KK) ITEM 720050 - GALVANIZED STEEL BEAM GUARDRAIL, TYPE 1
- (LL) ITEM 760507 - PROFILE MILLING, HOT-MIX
- (MM) ITEM 720656 - PCC SAFETY BARRIER PERMANENT, SINGLE FACE, MODIFIED TYPE 3
- (NN) ITEM 720657 - PCC SAFETY BARRIER PERMANENT, SINGLE FACE, MODIFIED TYPE 4
- (OO) ITEM 720651 - PCC SAFETY BARRIER PERMANENT, DOUBLE FACE, BIFURCATED TYPE 1
- (PP) ITEM 720652 - PCC SAFETY BARRIER PERMANENT, DOUBLE FACE, BIFURCATED TYPE 2
- (RR) ITEM 401668 - SUPERPAVE, TYPE C HOT-MIX, 160 GYRATIONS, PG 64-22, WEDGE
- (SS) ITEM 401669 - SUPERPAVE, TYPE B HOT-MIX, 160 GYRATIONS, PG 64-22, WEDGE
- (TT) ITEM 705001 - PCC SIDEWALK, 4"

PAVEMENT LIFT NOTE:
THE MAXIMUM LIFTS FOR THE INDIVIDUAL PAVING MATERIAL ARE AS FOLLOWS:
SUPERPAVE, TYPE C HOT-MIX - 2"
SUPERPAVE, TYPE B HOT-MIX - 3"
SUPERPAVE, BIT. CONC. BASE COURSE - 6"
GRADED AGGREGATE BASE COURSE - 8"

NOTES:
1) THE PGA IS APPLIED TO THE TOP OF THE FINAL PAVEMENT SURFACE.

HORIZONTAL / VERTICAL CONTROL DATA					
POINT	STATION	OFFSET	NORTHING	EASTING	ELEVATION
503	103+39.99	480.81	610979.518	432227.386	75.922

DATUMS

HORIZONTAL - PROJECT BASED ON THE DELAWARE STATE PLANE COORDINATE SYSTEM (NAD 27)

VERTICAL - PLAN ELEVATIONS ARE BASED ON N.G.S. SURVEY DATUM (NGVD 1929/59)

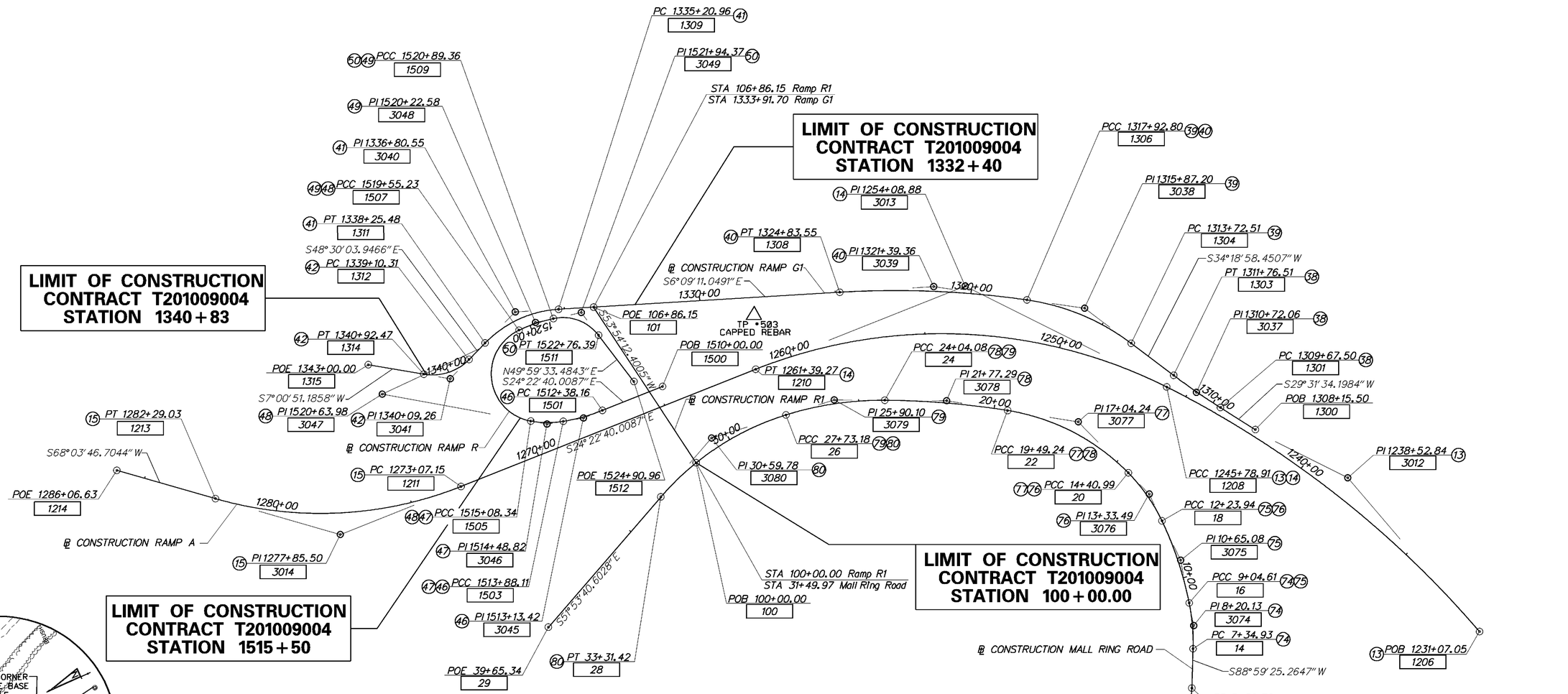

DELAWARE DEPARTMENT OF TRANSPORTATION	ADDENDUMS / REVISIONS	SCALE 0 200 400 600 FEET	SR1/I-95 INTERCHANGE - CHRISTIANA MALL ROAD BRIDGE	CONTRACT T201009004	BRIDGE NO. 1-223	HORIZONTAL AND VERTICAL CONTROL PLAN	SHEET NO. 12
				COUNTY NEW CASTLE	DESIGNED BY: ZJS		TOTAL SHTS. 164
					CHECKED BY: CDW		

8/10/2010 10:58:36 AM
M:\PROJECTS\2003\03059_DELTRNPK\SRMALL\CADD\3009004\PLANS\HV01_RAMPR1.DGN

RAMP A

CIRCULAR CURVE NO. 13

Element: Circular

	STATION	NORTHING	EASTING
PCC (1206)	1231+07.05	613701.3330	433271.6671
PI (3012)	1238+52.84	613190.2361	432728.5482
CC (1207)		611006.8104	435807.3224
PCC (1208)	1245+78.91	612508.6491	432425.8315

Radius: 3700.0000
Delta: 22°47'31.7249" Left
Degree of Curvature(Arc): 1°32'54.7245"
Length: 1471.8526
Tangent: 745.7870
Chord: 1462.1671
Middle Ordinate: 72.9465
External: 74.4136
Tangent Direction: S 46°44'23.3918" W
Radial Direction: N 43°15'36.6082" W
Chord Direction: S 35°20'37.5293" W
Radial Direction: N 66°03'08.3331" W
Tangent Direction: S 23°56'51.6669" W

CIRCULAR CURVE NO. 14

Element: Circular

	STATION	NORTHING	EASTING
PCC (1208)	1245+78.91	612508.6491	432425.8315
PI (3013)	1254+08.88	611750.1194	432088.9419
CC (1209)		611757.7298	434116.5770
PT (1210)	1261+39.27	610994.1400	432431.5159

Radius: 1850.0000
Delta: 48°19'31.6756" Left
Degree of Curvature(Arc): 3°05'49.4490"
Length: 1560.3612
Tangent: 829.9770
Chord: 1514.5198
Middle Ordinate: 162.0849
External: 177.6494
Tangent Direction: S 23°56'51.6669" W
Radial Direction: N 66°03'08.3331" W
Chord Direction: S 0°12'54.1709" E
Radial Direction: S 65°37'19.9913" W
Tangent Direction: S 24°22'40.0087" E

CIRCULAR CURVE NO. 15

Element: Circular

	STATION	NORTHING	EASTING
PC (1211)	1273+07.15	609930.3772	432913.5628
PI (3014)	1277+85.50	609494.6758	433111.0020
CC (1212)		609352.5254	431638.3815
PT (1213)	1282+29.03	609029.2538	433000.5472

Radius: 1400.0000
Delta: 37°43'42.0087" Right
Degree of Curvature(Arc): 4°05'33.2004"
Length: 921.8772
Tangent: 478.3492
Chord: 905.3119
Middle Ordinate: 75.1972
External: 79.4654
Tangent Direction: S 24°22'40.0087" E
Radial Direction: S 65°37'19.9913" W
Chord Direction: S 5°30'49.0043" E
Radial Direction: N 76°38'58.0000" W
Tangent Direction: S 13°21'02.0000" W

RAMP G1

CIRCULAR CURVE NO. 38

Element: Circular

	STATION	NORTHING	EASTING
PC (1301)	1309+67.50	612709.8159	432492.0468
PI (3037)	1310+72.06	612618.8315	432440.5154
CC (1302)		613941.8684	430316.7200
PT (1303)	1311+76.51	612532.4681	432381.5664

Radius: 2500.0000
Delta: 4°47'24.2524" Right
Degree of Curvature(Arc): 2°17'30.5922"
Length: 209.0062
Tangent: 104.5640
Chord: 208.9454
Middle Ordinate: 2.1839
External: 2.1858
Tangent Direction: S 29°31'34.1984" W
Radial Direction: N 60°28'25.8016" W
Chord Direction: S 31°55'16.3246" W
Radial Direction: N 55°41'01.5493" W
Tangent Direction: S 34°18'58.4507" W

CIRCULAR CURVE NO. 39

Element: Circular

	STATION	NORTHING	EASTING
PC (1304)	1313+72.51	612370.5841	432271.0694
PI (3038)	1315+87.20	612193.2580	432150.0321
CC (1305)		611899.8444	432960.7281
PCC (1306)	1317+92.80	611979.5416	432129.5402

Radius: 835.0000
Delta: 28°50'21.3225" Left
Degree of Curvature(Arc): 6°51'42.3720"
Length: 420.2889
Tangent: 214.6965
Chord: 415.8662
Middle Ordinate: 26.3042
External: 27.1598
Tangent Direction: S 34°18'58.4507" W
Radial Direction: N 55°41'01.5493" W
Chord Direction: S 19°53'47.7895" W
Radial Direction: N 84°31'22.8717" W
Tangent Direction: S 5°28'37.1283" W

CIRCULAR CURVE NO. 40

Element: Circular

	STATION	NORTHING	EASTING
PCC (1306)	1317+92.80	611979.5416	432129.5402
PI (3039)	1321+39.36	611634.5582	432096.4620
CC (1307)		611654.7395	435517.0042
PT (1308)	1324+83.55	611289.9890	432133.6086

Radius: 3403.0000
Delta: 11°37'48.1726" Left
Degree of Curvature(Arc): 1°41'01.2638"
Length: 690.7499
Tangent: 346.5657
Chord: 689.5647
Middle Ordinate: 17.5112
External: 17.6018
Tangent Direction: S 5°28'37.1283" W
Radial Direction: N 84°31'22.8717" W
Chord Direction: S 0°20'16.9580" E
Radial Direction: S 83°50'48.9557" W
Tangent Direction: S 6°09'11.0443" E

CIRCULAR CURVE NO. 41

Element: Circular

	STATION	NORTHING	EASTING
PC (1309)	1335+20.96	610258.5482	432244.8042
PI (3040)	1336+80.55	610099.8783	432261.9098
CC (1310)		610302.7084	432654.4307
PT (1311)	1338+25.48	609994.1335	432381.4371

Radius: 412.0000
Delta: 42°20'52.8975" Left
Degree of Curvature(Arc): 13°54'24.2734"
Length: 304.5144
Tangent: 159.5893
Chord: 297.6302
Middle Ordinate: 27.8151
External: 29.8289
Tangent Direction: S 6°09'11.0491" E
Radial Direction: S 83°50'48.9509" W
Chord Direction: S 27°19'37.4979" E
Radial Direction: S 41°29'56.0534" W
Tangent Direction: S 48°30'03.9466" E

RAMP G1

CIRCULAR CURVE NO. 42

Element: Circular

	STATION	NORTHING	EASTING
PC (1312)	1339+10.31	609937.9206	432444.9767
PI (3041)	1340+09.26	609872.3599	432519.0824
CC (1313)		609797.1145	432320.4068
PT (1314)	1340+92.47	609774.1568	432506.9998

Radius: 188.0000
Delta: 55°30'55.1324" Right
Degree of Curvature(Arc): 30°28'35.3225"
Length: 182.1579
Tangent: 98.9437
Chord: 175.1155
Middle Ordinate: 21.6340
External: 24.4473
Tangent Direction: S 48°30'03.9466" E
Radial Direction: S 41°29'56.0534" W
Chord Direction: S 20°44'36.3804" E
Radial Direction: N 82°59'08.8142" W
Tangent Direction: S 7°00'51.1858" W

RAMP R

CIRCULAR CURVE NO. 46

Element: Circular

	STATION	NORTHING	EASTING
PC (1501)	1512+38.16	610437.3244	432609.1823
PI (3045)	1513+13.42	610368.7702	432640.2478
CC (1502)		610148.3985	431971.5917
PCC (1503)	1513+88.11	610295.1790	432656.0298

Radius: 700.0000
Delta: 12°16'25.7082" Right
Degree of Curvature(Arc): 8°11'06.4009"
Length: 149.9529
Tangent: 75.2645
Chord: 149.6663
Middle Ordinate: 4.0115
External: 4.0346
Tangent Direction: S 24°22'40.0087" E
Radial Direction: S 65°37'19.9913" W
Chord Direction: S 18°14'27.1546" E
Radial Direction: S 77°53'45.6995" W
Tangent Direction: S 12°06'14.3005" E

CIRCULAR CURVE NO. 47

Element: Circular

	STATION	NORTHING	EASTING
PCC (1503)	1513+88.11	610295.1790	432656.0298
PI (3046)	1514+48.82	610235.8150	432668.7606
CC (1504)		610221.7887	432313.8107
PCC (1505)	1515+08.34	610175.6316	432660.7538

Radius: 350.0000
Delta: 19°40'55.4747" Right
Degree of Curvature(Arc): 16°22'12.8015"
Length: 120.2310
Tangent: 60.7137
Chord: 119.6407
Middle Ordinate: 5.1500
External: 5.2269
Tangent Direction: S 12°06'14.3005" E
Radial Direction: S 77°53'45.6995" W
Chord Direction: S 2°15'46.5631" E
Radial Direction: N 82°25'18.8258" W
Tangent Direction: S 7°34'41.1742" W

DATUMS

HORIZONTAL - PROJECT BASED ON THE DELAWARE STATE PLANE COORDINATE SYSTEM (NAD 27)

VERTICAL - PLAN ELEVATIONS ARE BASED ON N.G.S. SURVEY DATUM (NGVD 1929/59)

6/29/2010 10:00:42 AM
M:\PROJECTS\2003\03059_DELTRNPK\SRIMALL\CADD\3009004\PLANS\HV02_RAMPR1.DGN

DELAWARE DEPARTMENT OF TRANSPORTATION	ADDENDUMS / REVISIONS	NOT TO SCALE	SR1/I-95 INTERCHANGE - CHRISTIANA MALL ROAD BRIDGE	CONTRACT T201009004	BRIDGE NO. 1-223	HORIZONTAL AND VERTICAL CONTROL PLAN	SHEET NO. 13
				COUNTY NEW CASTLE	DESIGNED BY: ZJS		TOTAL SHTS. 164
					CHECKED BY: CDW		

RAMP R

CIRCULAR CURVE NO. 48

Element: Circular

	STATION	NORTHING	EASTING
PCC (1505)	1515+08.34	610175.6316	432660.7538
PI (3047)	1520+63.98	609624.8417	432587.4770
CC (1506)		610198.9739	432485.2997
PCC (1507)	1519+55.23	610116.5316	432328.6720

Radius: 177.0000
Delta: 144°39'41.2123" Right
Degree of Curvature(Arc): 32°22'13.7889"
Length: 446.8929
Tangent: 555.6428
Chord: 337.2998
Middle Ordinate: 123.2766
External: 406.1535
Tangent Direction: S 7°34'41.1742" W
Radial Direction: N 82°25'18.8258" W
Chord Direction: S 79°54'31.7804" W
Radial Direction: N 62°14'22.3865" E
Tangent Direction: N 27°45'37.6135" W

CIRCULAR CURVE NO. 49

Element: Circular

	STATION	NORTHING	EASTING
PCC (1507)	1519+55.23	610116.5316	432328.6720
PI (3048)	1520+22.58	610176.1252	432297.3044
CC (1508)		610395.9971	432859.6136
PCC (1509)	1520+89.36	610241.1897	432279.9286

Radius: 600.0000
Delta: 12°48'29.8713" Right
Degree of Curvature(Arc): 9°32'57.4676"
Length: 134.1282
Tangent: 67.3448
Chord: 133.8491
Middle Ordinate: 3.7441
External: 3.7676
Tangent Direction: N 27°45'37.6135" W
Radial Direction: N 62°14'22.3865" E
Chord Direction: N 21°21'22.6778" W
Radial Direction: N 75°02'52.2579" E
Tangent Direction: N 14°57'07.7421" W

CIRCULAR CURVE NO. 50

Element: Circular

	STATION	NORTHING	EASTING
PCC (1509)	1520+89.36	610241.1897	432279.9286
PI (3049)	1521+94.37	610342.6393	432252.8361
CC (1510)		610283.7618	432439.3420
PT (1511)	1522+76.39	610410.1455	432333.2658

Radius: 165.0000
Delta: 64°56'41.2264" Right
Degree of Curvature(Arc): 34°43'28.9735"
Length: 187.0276
Tangent: 105.0049
Chord: 177.1747
Middle Ordinate: 25.7977
External: 30.5787
Tangent Direction: N 14°57'07.7421" W
Radial Direction: N 75°02'52.2579" E
Chord Direction: N 17°31'12.8711" E
Radial Direction: S 40°00'26.5157" E
Tangent Direction: N 49°59'33.4843" E

MALL RING ROAD

CIRCULAR CURVE NO. 73

Element: Circular

	STATION	NORTHING	EASTING
PC (11)	2+55.80	612442.9591	433743.1290
PI (3073)	4+69.87	612657.0277	433743.4645
CC (12)		612443.2883	433533.1292
PT (13)	5+89.70	612653.2556	433529.4289

Radius: 210.0000
Delta: 91°05'58.0630" Left
Degree of Curvature(Arc): 27°17'01.3363"
Length: 333.8970
Tangent: 214.0689
Chord: 299.8206
Middle Ordinate: 62.9391
External: 89.8758
Tangent Direction: N 0°05'23.3277" E
Radial Direction: S 89°54'36.6723" E
Chord Direction: N 45°27'35.7038" W
Radial Direction: N 1°00'34.7353" W
Tangent Direction: S 88°59'25.2647" W

CIRCULAR CURVE NO. 74

Element: Circular

	STATION	NORTHING	EASTING
PC (14)	7+34.93	612650.6966	433384.2241
PI (3074)	8+20.13	612649.1953	433299.0343
CC (15)		611900.8131	433397.4397
PCC (16)	9+04.61	612628.6230	433216.3521

Radius: 750.0000
Delta: 12°57'44.9778" Left
Degree of Curvature(Arc): 7°38'21.9742"
Length: 169.6786
Tangent: 85.2031
Chord: 169.3170
Middle Ordinate: 4.7934
External: 4.8242
Tangent Direction: S 88°59'25.2647" W
Radial Direction: N 1°00'34.7353" W
Chord Direction: S 82°30'32.7758" W
Radial Direction: N 13°58'19.7131" W
Tangent Direction: S 76°01'40.2869" W

CIRCULAR CURVE NO. 75

Element: Circular

	STATION	NORTHING	EASTING
PCC (16)	9+04.61	612628.6230	433216.3521
PI (3075)	10+65.08	612589.8764	433060.6254
CC (17)		611367.0858	433530.2373
PCC (18)	12+23.94	612514.4235	432918.9958

Radius: 1300.0000
Delta: 14°04'27.1653" Left
Degree of Curvature(Arc): 4°24'26.5236"
Length: 319.3338
Tangent: 160.4746
Chord: 318.5315
Middle Ordinate: 9.7929
External: 9.8672
Tangent Direction: S 76°01'40.2869" W
Radial Direction: N 13°58'19.7131" W
Chord Direction: S 68°59'26.7043" W
Radial Direction: N 28°02'46.8784" W
Tangent Direction: S 61°57'13.1216" W

CIRCULAR CURVE NO. 76

Element: Circular

	STATION	NORTHING	EASTING
PCC (18)	12+23.94	612514.4235	432918.9958
PI (3076)	13+33.49	612462.9164	432822.3138
CC (19)		611940.7547	433224.6165
PCC (20)	14+40.99	612382.5663	432747.8541

Radius: 650.0000
Delta: 19°07'57.4997" Left
Degree of Curvature(Arc): 8°48'53.0471"
Length: 217.0529
Tangent: 109.5463
Chord: 216.0458
Middle Ordinate: 9.0390
External: 9.1664
Tangent Direction: S 61°57'13.1216" W
Radial Direction: N 28°02'46.8784" W
Chord Direction: S 52°23'14.3718" W
Radial Direction: N 47°10'44.3781" W
Tangent Direction: S 42°49'15.6219" W

MALL RING ROAD

CIRCULAR CURVE NO. 77

Element: Circular

	STATION	NORTHING	EASTING
PCC (20)	14+40.99	612382.5663	432747.8541
PI (3077)	17+04.24	612189.4811	432568.9237
CC (21)		611838.7981	433334.6386
PCC (22)	19+49.63	611927.8729	432539.6130

Radius: 800.0000
Delta: 36°25'41.6619" Left
Degree of Curvature(Arc): 7°09'43.1008"
Length: 508.6342
Tangent: 263.2451
Chord: 500.1104
Middle Ordinate: 40.0840
External: 42.1983
Tangent Direction: S 42°49'15.6210" W
Radial Direction: N 47°10'44.3790" W
Chord Direction: S 24°36'24.7900" W
Radial Direction: N 83°36'26.0409" W
Tangent Direction: S 6°23'33.9591" W

CIRCULAR CURVE NO. 78

Element: Circular

	STATION	NORTHING	EASTING
PCC (22)	19+49.63	611927.8729	432539.6130
PI (3078)	21+77.29	611701.6236	432514.2640
CC (23)		611593.8425	435520.9590
PCC (24)	24+04.08	611474.1400	432523.3481

Radius: 3000.0000
Delta: 8°40'46.2810" Left
Degree of Curvature(Arc): 1°54'35.4935"
Length: 454.4587
Tangent: 227.6649
Chord: 454.0243
Middle Ordinate: 8.6014
External: 8.6261
Tangent Direction: S 6°23'33.9591" W
Radial Direction: N 83°36'26.0409" W
Chord Direction: S 2°03'10.8186" W
Radial Direction: S 87°42'47.6781" W
Tangent Direction: S 2°17'12.3219" E

CIRCULAR CURVE NO. 79

Element: Circular

	STATION	NORTHING	EASTING
PCC (24)	24+04.08	611474.1400	432523.3481
PI (3079)	25+90.10	611288.2704	432530.7703
CC (25)		611522.0210	433722.3924
PCC (26)	27+73.18	611113.3709	432594.1172

Radius: 1200.0000
Delta: 17°37'23.2624" Left
Degree of Curvature(Arc): 4°46'28.7339"
Length: 369.0979
Tangent: 186.0178
Chord: 367.6447
Middle Ordinate: 14.1630
External: 14.3322
Tangent Direction: S 2°17'12.3189" E
Radial Direction: S 87°42'47.6811" W
Chord Direction: S 11°05'53.9501" E
Radial Direction: S 70°05'24.4187" W
Tangent Direction: S 19°54'35.5813" E

CIRCULAR CURVE NO. 80

Element: Circular

	STATION	NORTHING	EASTING
PCC (26)	27+73.18	611113.3709	432594.1172
PI (3080)	30+59.78	610843.9001	432691.7168
CC (27)		611453.9127	433534.3466
PCC (28)	33+31.42	610667.0357	432917.2367

Radius: 1000.0000
Delta: 31°59'05.0215" Left
Degree of Curvature(Arc): 5°43'46.4806"
Length: 558.2388
Tangent: 286.6012
Chord: 551.0185
Middle Ordinate: 38.7016
External: 140.2597
Tangent Direction: S 19°54'35.5813" E
Radial Direction: S 70°05'24.4187" W
Chord Direction: S 35°54'08.0920" E
Radial Direction: S 38°06'19.3972" W
Tangent Direction: S 51°53'40.6028" E

DATUMS

HORIZONTAL - PROJECT BASED ON THE DELAWARE STATE PLANE COORDINATE SYSTEM (NAD 27)

VERTICAL - PLAN ELEVATIONS ARE BASED ON N.G.S. SURVEY DATUM (NGVD 1929/59)

6/25/2010 3:58:55 PM
M:\PROJECTS\2003\03059_DELTRNPK\SR1MALL\CADD\3009004\PLANS\HV03_RAMPR1.DGN

DELAWARE DEPARTMENT OF TRANSPORTATION

ADDENDUMS / REVISIONS

NOT TO SCALE

SR1/I-95 INTERCHANGE - CHRISTIANA MALL ROAD BRIDGE

CONTRACT	BRIDGE NO.	1-223
T201009004	DESIGNED BY:	ZJS
COUNTY		
NEW CASTLE	CHECKED BY:	CDW

HORIZONTAL AND VERTICAL CONTROL PLAN

SHEET NO.
14
TOTAL SHTS.
164

RAMP A

CONSTRUCTION ALIGNMENT CONTROL				
POINT	STATION	OFFSET	NORTHING	EASTING
1206	1231+07.05	0	613701.3330	433271.6671
3012	1238+42.98	74.4136	613190.2361	432728.5482
1208	1245+78.91	0	612508.6491	432425.8315
3013	1253+59.09	177.6494	611750.1194	432088.9419
1210	1261+39.27	0	610994.1400	432431.5159
1211	1273+07.15	0	609930.3772	432913.5628
3014	1277+68.09	-79.4654	609494.6758	433111.0020
1213	1282+29.03	0	609029.2538	433000.5472
1214	1286+06.63	0	608661.8591	432913.3564

RAMP G1

CONSTRUCTION ALIGNMENT CONTROL				
POINT	STATION	OFFSET	NORTHING	EASTING
1300	1308+15.50	0	612842.0758	432566.9556
1301	1309+67.50	0	612709.8159	432492.0468
3037	1310+72.00	-2.1858	612618.8315	432440.5154
1303	1311+76.51	0	612532.4681	432381.5664
1304	1313+72.51	0	612370.5841	432271.0694
3038	1315+82.65	27.1598	612193.2580	432150.0321
1306	1317+92.80	0	611979.5416	432129.5402
3039	1321+38.17	17.6018	611634.5582	432096.4620
1308	1324+83.55	0	611289.9890	432133.6086
1309	1335+20.96	0	610258.5482	432244.8042
3040	1336+73.22	29.8289	610099.8783	432261.9098
1311	1338+25.48	0	609994.1335	432381.4371
1312	1339+10.31	0	609937.9206	432444.9767
3041	1340+01.39	-24.4473	609872.3599	432519.0824
1314	1340+92.47	0	609774.1568	432506.9998
1315	1343+00.00	0	609568.1791	432481.6571

RAMP R

CONSTRUCTION ALIGNMENT CONTROL				
POINT	STATION	OFFSET	NORTHING	EASTING
1500	1510+00.00	0	610654.2486	432510.8826
1501	1512+38.16	0	610437.3244	432609.1823
3045	1513+13.13	-4.0346	610368.7702	432640.2478
1503	1513+88.11	0	610295.1790	432656.0298
3046	1514+48.23	-5.2269	610235.8150	432668.7606
1505	1515+08.34	0	610175.6316	432660.7538
3047	1517+31.79	-406.1535	609624.8417	432587.4770
1507	1519+55.23	0	610116.5316	432328.6720
3048	1520+22.30	-3.7676	610176.1252	432297.3044
1509	1520+89.36	0	610241.1897	432279.9286
3049	1521+82.88	-30.5787	610342.6393	432252.8361
1511	1522+76.39	0	610410.1455	432333.2658
1512	1524+90.96	0	610548.0904	432497.6192

RAMP R1

CONSTRUCTION ALIGNMENT CONTROL				
POINT	STATION	OFFSET	NORTHING	EASTING
100	100+00.00	0	610791.3127	432785.3734
101	106+86.15	0	610387.0703	432230.9487

MALL RING ROAD

CONSTRUCTION ALIGNMENT CONTROL				
POINT	STATION	OFFSET	NORTHING	EASTING
10	0+96.34	0	612283.5005	433742.8790
11	2+55.80	0	612442.9591	433743.1290
3073	4+22.75	89.87	612657.0277	433743.4645
13	5+89.70	0	612653.2556	433529.4289
14	7+34.93	0	612650.6966	433384.2207
3074	8+19.77	4.82	612649.1953	433299.0343
16	9+04.61	0	612628.6230	433216.3521
3075	10+64.27	9.87	612589.8764	433060.6254
18	12+23.94	0	612514.4235	432918.9958
3076	13+32.47	9.17	612462.9164	432822.3138
20	14+40.99	0	612382.5663	432747.8541
3077	16+95.31	42.20	612189.4811	432568.9237
22	19+49.63	0	611927.8729	432539.6130
3078	21+76.86	8.62	611701.6236	432514.2640
24	24+04.08	0	611474.1400	432523.3481
3079	25+88.63	14.33	611288.2704	432530.7703
26	27+73.18	0	611113.3709	432594.1172
3080	30+52.30	40.26	610843.9001	432691.7168
28	33+31.42	0	610667.0357	432917.2367
29	39+65.34	0	610275.8407	433416.0495

DATUMS

HORIZONTAL - PROJECT BASED ON THE DELAWARE STATE PLANE COORDINATE SYSTEM (NAD 27)

VERTICAL - PLAN ELEVATIONS ARE BASED ON N.G.S. SURVEY DATUM (NGVD 1929/59)

6/25/2010 4:01:01 PM
M:\PROJECTS\2003\03059_DELTRNPK\SR1MALL\CADD\3009004\PLANS\HV04_RAMPR.DGN

DELAWARE DEPARTMENT OF TRANSPORTATION	ADDENDUMS / REVISIONS	NOT TO SCALE	SR1/I-95 INTERCHANGE - CHRISTIANA MALL ROAD BRIDGE	CONTRACT T201009004	BRIDGE NO. 1-223	HORIZONTAL AND VERTICAL CONTROL PLAN	SHEET NO. 15
				COUNTY NEW CASTLE	DESIGNED BY: ZJS		TOTAL SHTS. 164
					CHECKED BY: CDW		

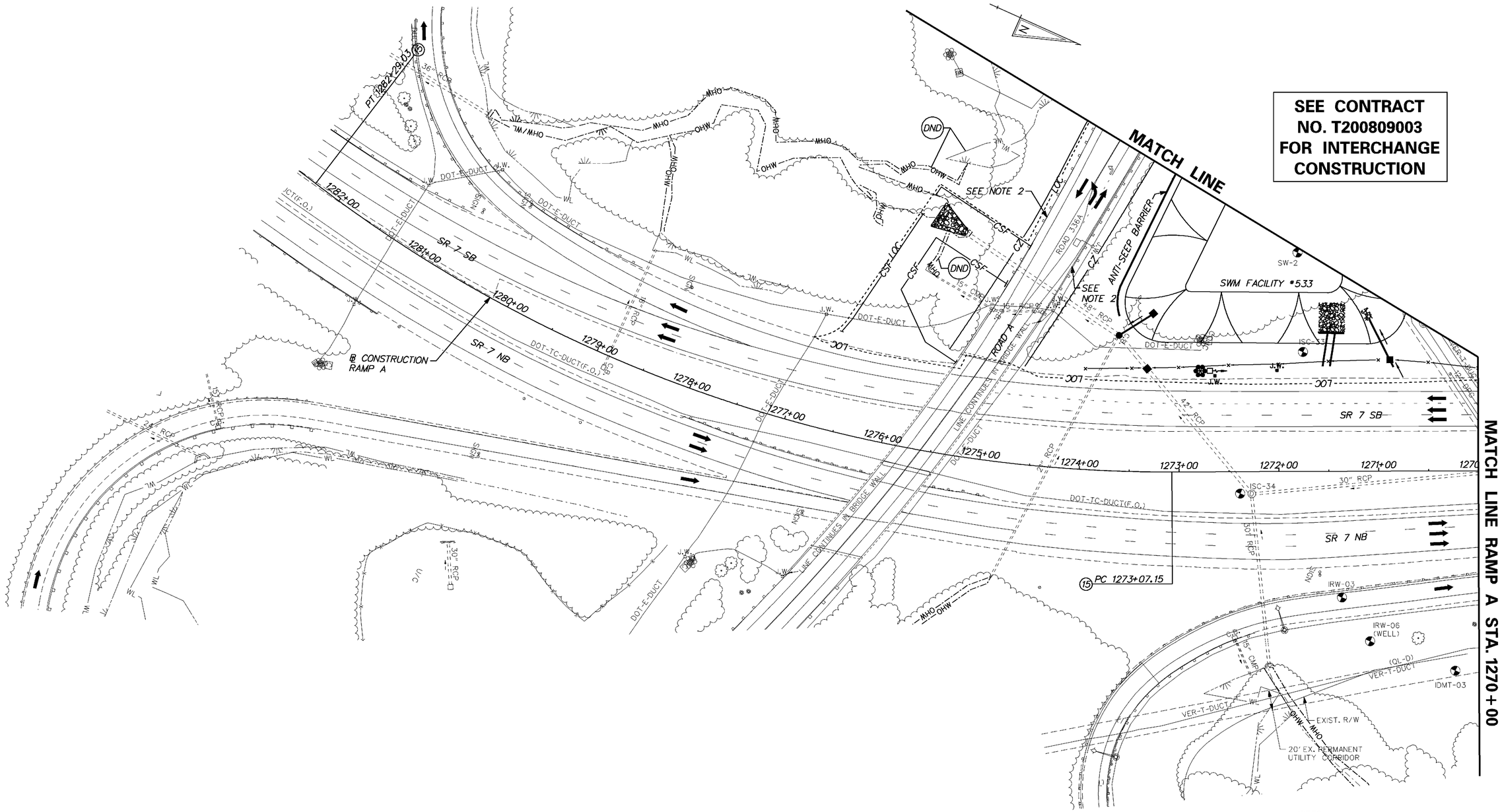

NOTES:

1. SEE DRAINAGE PLANS FOR PIPE AND DRAINAGE SCHEDULES AND DITCH GRADING.
2. EXISTING GUARDRAIL TO REMAIN. SEE CONSTRUCTION DETAILS TO REPLACE STEEL OFFSET BLOCKS WITH WOOD OFFSET BLOCKS (720010).

9/15/2010 1:29:12 PM
M:\PROJECTS\2003\03059_DELTRNPK\SRMALL\CADD\3009004\PLANS\CP03_RAMPR1.DGN

DELAWARE DEPARTMENT OF TRANSPORTATION	ADDENDUMS / REVISIONS	SCALE 0 50 100 150 FEET	SR1/I-95 INTERCHANGE - CHRISTIANA MALL ROAD BRIDGE	CONTRACT T201009004	BRIDGE NO. 1-223	CONSTRUCTION PLAN	SHEET NO. 16
				COUNTY NEW CASTLE	DESIGNED BY: RLS		TOTAL SHTS. 164
					CHECKED BY: NRB		

GUARDRAIL SCHEDULE

NO.	ITEM DESCRIPTION / TYPE	BEGIN STA.	OFFSET	LENGTH
17*	GUARDRAIL END TREATMENT ATTENUATOR, TYPE 1	N/A	A	1 EACH
	GALVANIZED STEEL BEAM GUARDRAIL, TYPE 1	N/A	VARIES	25.00'

NOTES: ALL BEGINNING STATIONS ARE APPROXIMATE. EXACT LOCATIONS ARE TO BE DETERMINED BY THE ENGINEER IN THE FIELD.
A = OFFSET ATTENUATORS AS PER STANDARD DETAILS.

* GUARDRAIL INSTALLATION SHALL INCLUDE ±35 S.Y. OF MAINTENANCE PAVEMENT. SEE CONSTRUCTION DETAILS.

CURB SCHEDULE

NO.	ITEM DESCRIPTION / TYPE	LENGTH
1	PCC CURB, TYPE 1 (701010)	10'
2	PCC CURB, TYPE 2 (701011)	911'
3	INT. PCC CURB AND GUTTER, TYPE 1 (701020)	849'
4	PCC CURB, TYPE 2 (701011)	216'
5	PCC MONOLITHIC MEDIAN (701026)	58'

BARRIER SCHEDULE

NO.	ITEM DESCRIPTION / TYPE	LENGTH
128	DOUBLE FACE, BIFURCATED TYPE 1 (720651)	400'

NOTE: SEE CONSTRUCTION DETAILS FOR RAMP R BARRIER TRANSITION TO P.C.C. CURB, TYPE 2.

UNDERDRAIN SCHEDULE

NO.	SIZE / TYPE	LENGTH	DIS. TYPE	DIS. EL.
1	6" PERFORATED	105.00	D1-362	47.87
2	6" PERFORATED	29.00	D1-363	47.72
3	6" PERFORATED	29.00	D1-363	47.72
4	6" PERFORATED	288.75	D1-391	47.94
5	6" PERFORATED	207.00	D1-392	54.23
6	6" PERFORATED	164.65	D1-322	56.59
7	6" PERFORATED	97.50	D1-395	51.35
8	6" PERFORATED	174.67	D1-393	53.96
9	6" PERFORATED	137.25	D1-504	56.56
10	6" OUTLET	11.75	1518+50 RT	49.40
11	6" PERFORATED	320.00	1518+50 RT	49.40
12	6" OUTLET	10.75	1521+70 RT	54.76
13	6" PERFORATED	321.00	1521+70 RT	54.76
14	6" PERFORATED	142.50	D1-375	62.08
15	6" PERFORATED	92.25	D1-323	49.78
16	6" PERFORATED	68.50	D1-381	57.87

RIGHT-OF-WAY MONUMENT SCHEDULE

NO.	STATION	OFFSET	NORTHING	EASTING
4100	1340+09.21	71.55	609833.8000	432430.9311
4102	1339+10.31	54.00	609897.4781	432409.1939
4104	1338+25.48	54.00	609953.6869	432345.6589
4108	1335+20.96	54.00	610252.7625	432191.1150
4110	1332+44.70	54.00	610527.4359	432161.5036

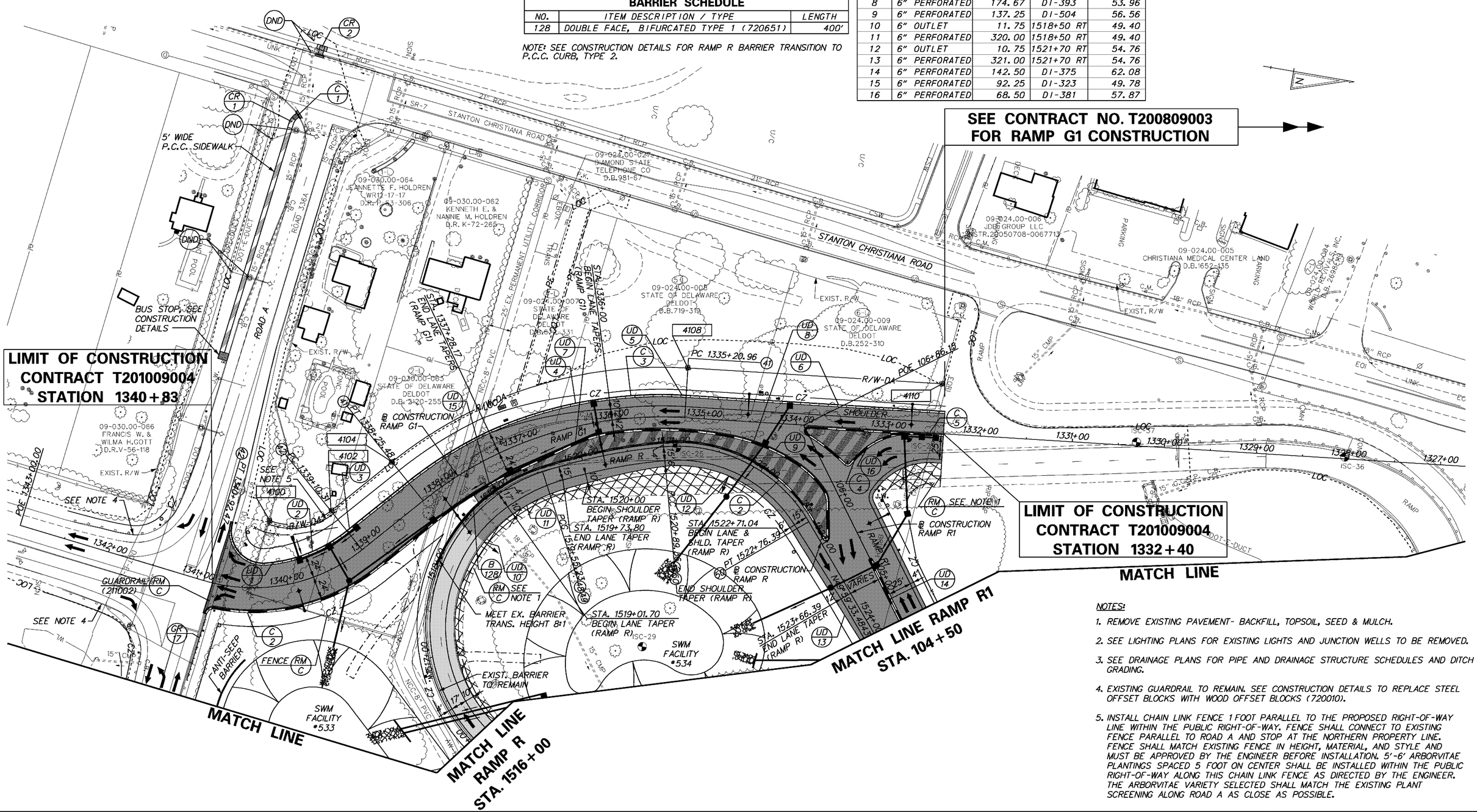

NOTES:

1. REMOVE EXISTING PAVEMENT- BACKFILL, TOPSOIL, SEED & MULCH.
2. SEE LIGHTING PLANS FOR EXISTING LIGHTS AND JUNCTION WELLS TO BE REMOVED.
3. SEE DRAINAGE PLANS FOR PIPE AND DRAINAGE STRUCTURE SCHEDULES AND DITCH GRADING.
4. EXISTING GUARDRAIL TO REMAIN. SEE CONSTRUCTION DETAILS TO REPLACE STEEL OFFSET BLOCKS WITH WOOD OFFSET BLOCKS (720010).
5. INSTALL CHAIN LINK FENCE 1 FOOT PARALLEL TO THE PROPOSED RIGHT-OF-WAY LINE WITHIN THE PUBLIC RIGHT-OF-WAY. FENCE SHALL CONNECT TO EXISTING FENCE PARALLEL TO ROAD A AND STOP AT THE NORTHERN PROPERTY LINE. FENCE SHALL MATCH EXISTING FENCE IN HEIGHT, MATERIAL, AND STYLE AND MUST BE APPROVED BY THE ENGINEER BEFORE INSTALLATION. 5'-6' ARBORVITAE PLANTINGS SPACED 5 FOOT ON CENTER SHALL BE INSTALLED WITHIN THE PUBLIC RIGHT-OF-WAY ALONG THIS CHAIN LINK FENCE AS DIRECTED BY THE ENGINEER. THE ARBORVITAE VARIETY SELECTED SHALL MATCH THE EXISTING PLANT SCREENING ALONG ROAD A AS CLOSE AS POSSIBLE.

10/1/2010 12:04:22 PM
M:\projects\2003\03059_deltrnpk\SR1Mall\Cadd\3009004\Plans\cp05_RampR1.dgn

DELAWARE DEPARTMENT OF TRANSPORTATION	ADDENDUMS / REVISIONS	SCALE 0 50 100 150 FEET	SR1 / I-95 INTERCHANGE - CHRISTIANA MALL ROAD BRIDGE	CONTRACT T201009004	BRIDGE NO. 1-223	CONSTRUCTION PLAN	SHEET NO. 17
				COUNTY NEW CASTLE	DESIGNED BY: RLS		TOTAL SHTS. 164
					CHECKED BY: NRB		

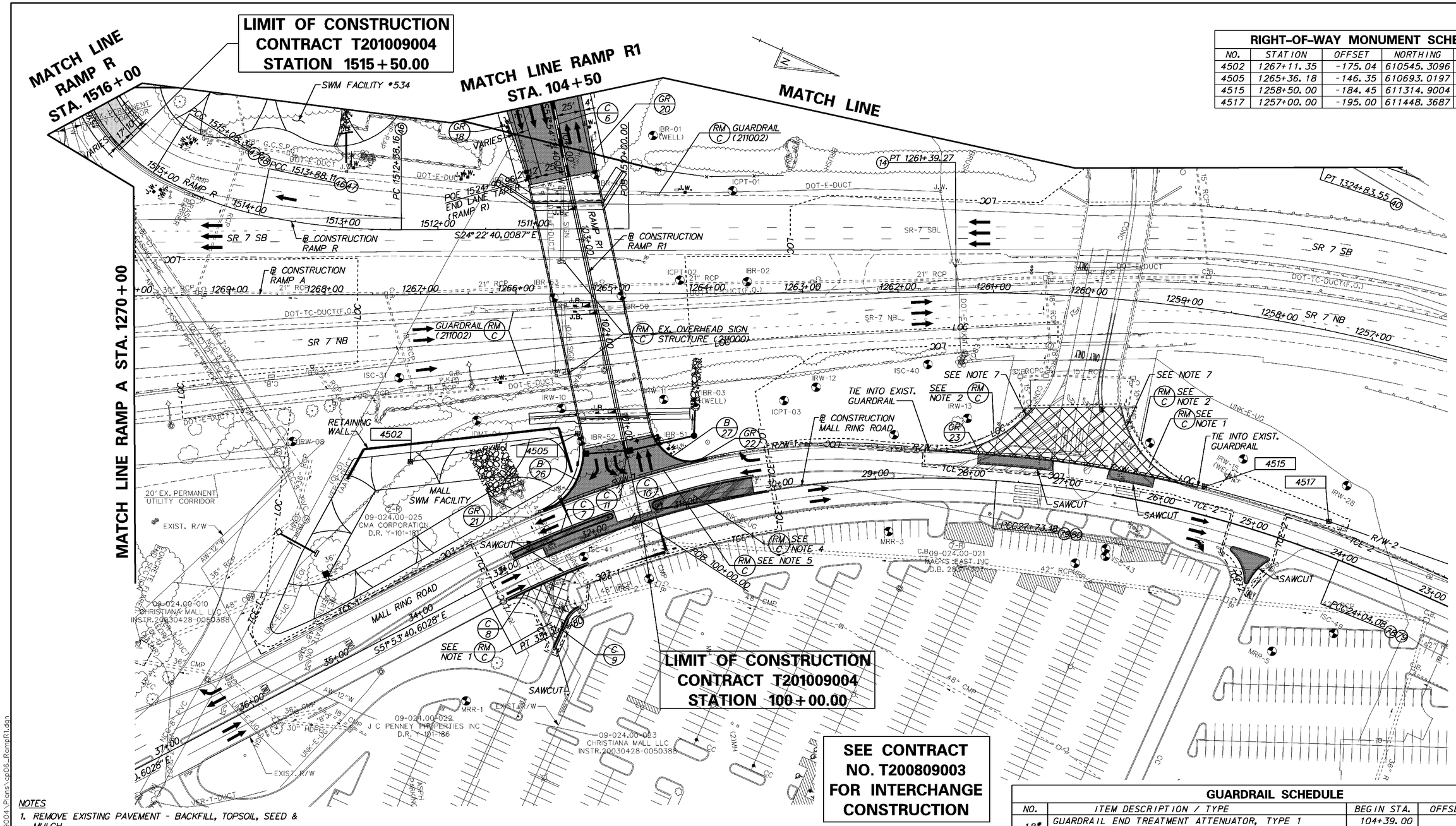

RIGHT-OF-WAY MONUMENT SCHEDULE

NO.	STATION	OFFSET	NORTHING	EASTING
4502	1267+11.35	-175.04	610545.3096	432827.0739
4505	1265+36.18	-146.35	610693.0197	432728.6404
4515	1258+50.00	-184.45	611314.9004	432510.9746
4517	1257+00.00	-195.00	611448.3687	432490.7477

NOTES

1. REMOVE EXISTING PAVEMENT - BACKFILL, TOPSOIL, SEED & MULCH.
2. REMOVE GUARDRAIL, CONSTRUCTED BY MALL RING ROAD CONSTRUCTION, AS REQUIRED TO CONSTRUCT NEW GUARDRAIL. (211002)
3. SEE LIGHTING PLANS FOR EXISTING LIGHTS AND JUNCTION WELLS TO BE REMOVED.
4. REMOVE CURB AND PAVEMENT AS REQUIRED TO CONSTRUCT NEW ISLAND CONFIGURATION.
5. REMOVE EXISTING GUARDRAIL AS REQUIRED AND CONSTRUCT GUARDRAIL TO BARRIER CONNECTIONS.
6. SEE DRAINAGE PLANS FOR PIPE & DRAINAGE STRUCTURE SCHEDULES AND DITCH GRADING.
7. MAINTAIN EXISTING FLOW LINE AND DRAINAGE INLET TO CAPTURE BRIDGE DRAINAGE.

CURB SCHEDULE

NO.	ITEM DESCRIPTION / TYPE	LENGTH
6***	PCC CURB, TYPE 2 (701011)	312'
7	PCC CURB, TYPE 1 MODIFIED (701027)	230'
8	PCC CURB, TYPE 1 MODIFIED (701027)	90'
9	PCC CURB, TYPE 1 MODIFIED (701027)	51'
10	PCC CURB, TYPE 1 MODIFIED (701027)	235'
11***	PCC CURB, TYPE 2 (701011)	38'

*** PROVIDE 4 FOOT CURB TRANSITION FROM BRIDGE CURB TO PCC CURB, TYPE 2. COST SHALL BE INCLUDED IN UNIT PRICE BID FOR ITEM 701011.

BARRIER SCHEDULE

NO.	ITEM DESCRIPTION / TYPE	LENGTH
26	SINGLE FACE (720529)	83
27	SINGLE FACE (720529)	70

GUARDRAIL SCHEDULE

NO.	ITEM DESCRIPTION / TYPE	BEGIN STA.	OFFSET	LENGTH
18*	GUARDRAIL END TREATMENT ATTENUATOR, TYPE 1	104+39.00	A	1 EACH
	GUARDRAIL TO BARRIER CONNECTION, APPROACH TYPE 1	103+89.00	VARIES	1 EACH
20**	GUARDRAIL TO BARRIER CONNECTION (EXIT TYPE)	103+66.41	VARIES	1 EACH
	GALVANIZED STEEL BEAM GUARDRAIL, TYPE 1	103+80.66	VARIES	25.00'
	END ANCHORAGE	104+05.66	VARIES	1 EACH
21	GUARDRAIL TO BARRIER CONNECTION (EXIT TYPE)	32+78.38	45.00'	1 EACH
22	GUARDRAIL TO BARRIER CONNECTION, APPROACH TYPE 1	30+85.86	45.00'	1 EACH
23	GALVANIZED STEEL BEAM GUARDRAIL, TYPE 1	25+96.01	27.00'	287.50'

NOTES: ALL BEGINNING STATIONS ARE APPROXIMATE. EXACT LOCATIONS ARE TO BE DETERMINED BY THE ENGINEER IN THE FIELD.
A = OFFSET ATTENUATORS AS PER STANDARD DETAILS.
*GUARDRAIL INSTALLATION SHALL INCLUDE ±30 S.Y. OF MAINTENANCE PAVEMENT. SEE CONSTRUCTION DETAILS.
**GUARDRAIL INSTALLATION SHALL INCLUDE ±20 S.Y. OF MAINTENANCE PAVEMENT. SEE CONSTRUCTION DETAILS.

DELAWARE
DEPARTMENT OF TRANSPORTATION

ADDENDUMS / REVISIONS

SCALE
0 50 100 150
FEET

SR1/I-95 INTERCHANGE -
CHRISTIANA MALL
ROAD BRIDGE

CONTRACT	BRIDGE NO.	1-223
T201009004	DESIGNED BY:	RLS
COUNTY		
NEW CASTLE	CHECKED BY:	NRB

CONSTRUCTION PLAN

SHEET NO. 18
TOTAL SHTS. 164

9/15/2010 2:14:58 PM
M:\projects\2003\03059_deltrnpk\SR1Mall\Cadd\3009004\Plans\cp06_RampR1.dgn

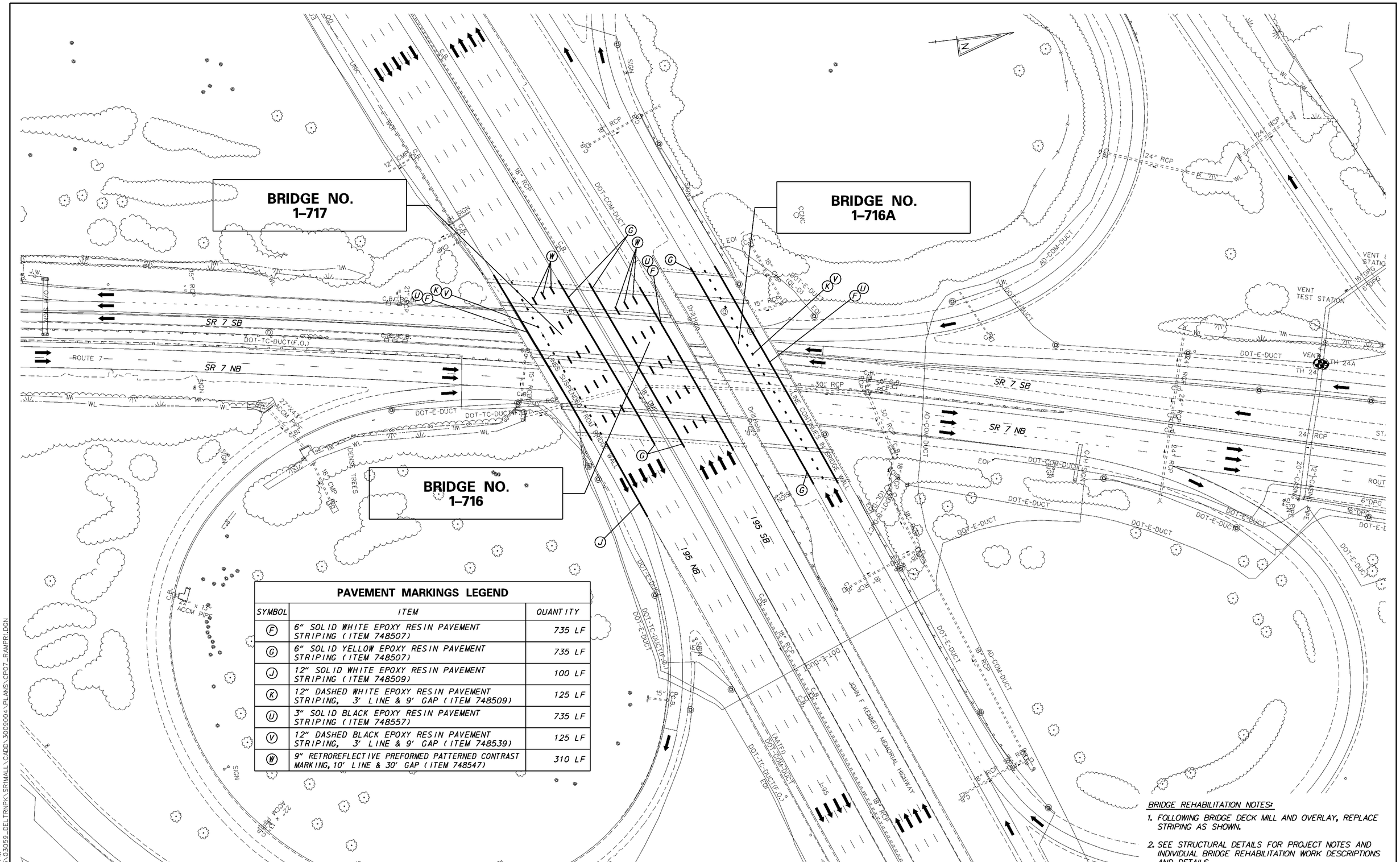

PAVEMENT MARKINGS LEGEND

SYMBOL	ITEM	QUANTITY
F	6" SOLID WHITE EPOXY RESIN PAVEMENT STRIPING (ITEM 748507)	735 LF
G	6" SOLID YELLOW EPOXY RESIN PAVEMENT STRIPING (ITEM 748507)	735 LF
J	12" SOLID WHITE EPOXY RESIN PAVEMENT STRIPING (ITEM 748509)	100 LF
K	12" DASHED WHITE EPOXY RESIN PAVEMENT STRIPING, 3' LINE & 9' GAP (ITEM 748509)	125 LF
U	3" SOLID BLACK EPOXY RESIN PAVEMENT STRIPING (ITEM 748557)	735 LF
V	12" DASHED BLACK EPOXY RESIN PAVEMENT STRIPING, 3' LINE & 9' GAP (ITEM 748539)	125 LF
W	9" RETROREFLECTIVE PREFORMED PATTERNED CONTRAST MARKING, 10' LINE & 30' GAP (ITEM 748547)	310 LF

BRIDGE REHABILITATION NOTES:

1. *FOLLOWING BRIDGE DECK MILL AND OVERLAY, REPLACE STRIPING AS SHOWN.*
2. *SEE STRUCTURAL DETAILS FOR PROJECT NOTES AND INDIVIDUAL BRIDGE REHABILITATION WORK DESCRIPTIONS AND DETAILS.*

DELAWARE DEPARTMENT OF TRANSPORTATION

ADDENDUMS / REVISIONS

SCALE 0 50 100 150 FEET

SR1 / I-95 INTERCHANGE - CHRISTIANA MALL ROAD BRIDGE

CONTRACT	BRIDGE NO.	1-223
T201009004	DESIGNED BY:	SNT
COUNTY	CHECKED BY:	CDW
NEW CASTLE		

CONSTRUCTION PLAN

SHEET NO. 19 / TOTAL SHTS. 164

8/19/2010 3:31:46 PM
M:\PROJECTS\2003\03059_DELTRNPK\SRTMALL\CADD\3009004\PLANS\CP07_RAMPR1.DGN

SEE CONTRACT NO. T200809003 FOR RAMP G1 CONSTRUCTION

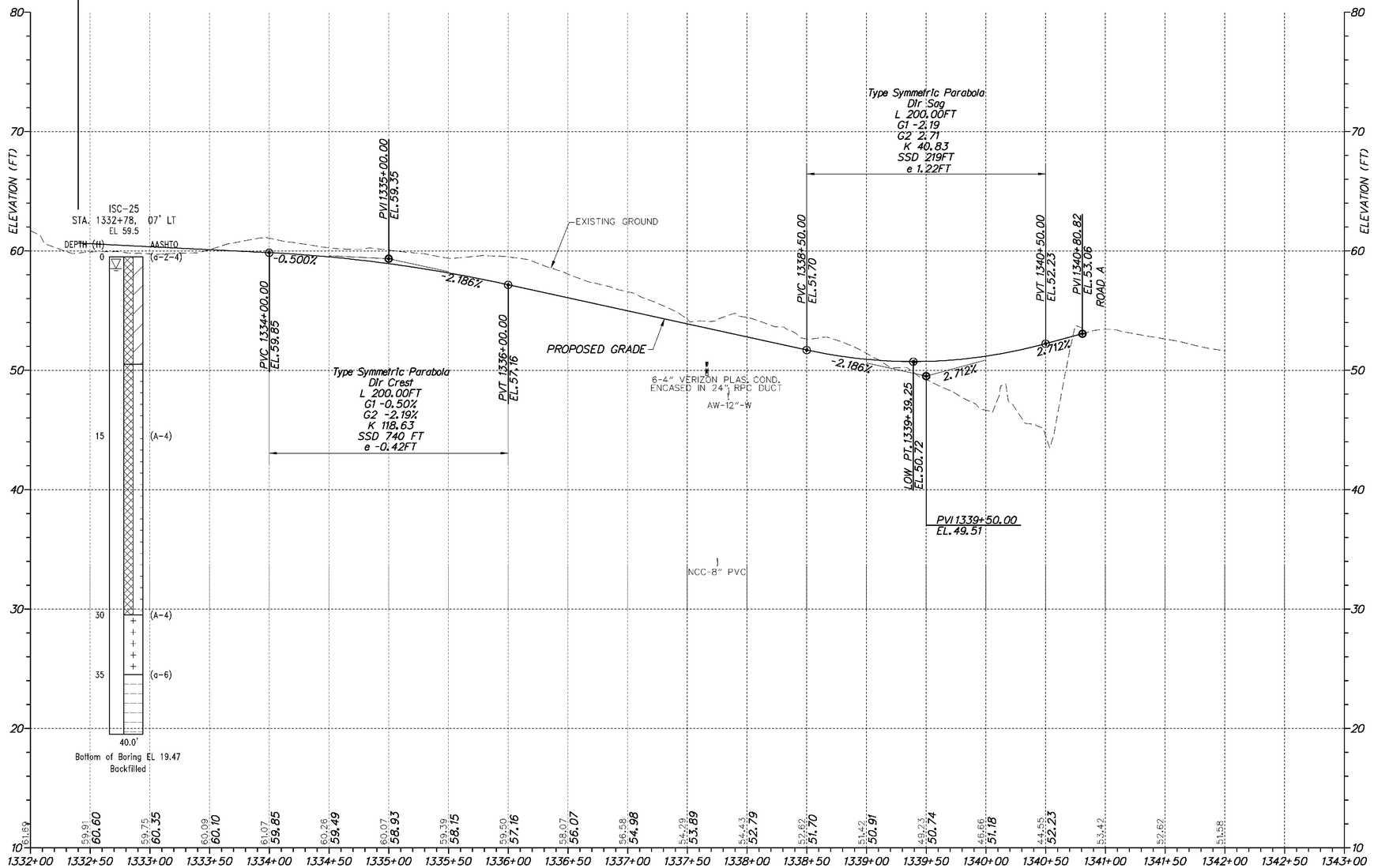

RAMP G1

VERTICAL SCALE FEET 15 10 5 0

DELAWARE DEPARTMENT OF TRANSPORTATION	ADDENDUMS / REVISIONS	SCALE 0 50 100 150 FEET	SR1 / I-95 INTERCHANGE - CHRISTIANA MALL ROAD BRIDGE	CONTRACT T201009004 / COUNTY NEW CASTLE	BRIDGE NO. 1-223 / DESIGNED BY: ZJS / CHECKED BY: CDW	PROFILES	SHEET NO. 20 / TOTAL SHTS. 164

8/18/2010 3:34:06 PM
M:\PROJECTS\2003\03059_DELTRNPK\SRIMALL\CADD\3009004\PLANS\PF38_RAMPG1_RAMPR1.DGN

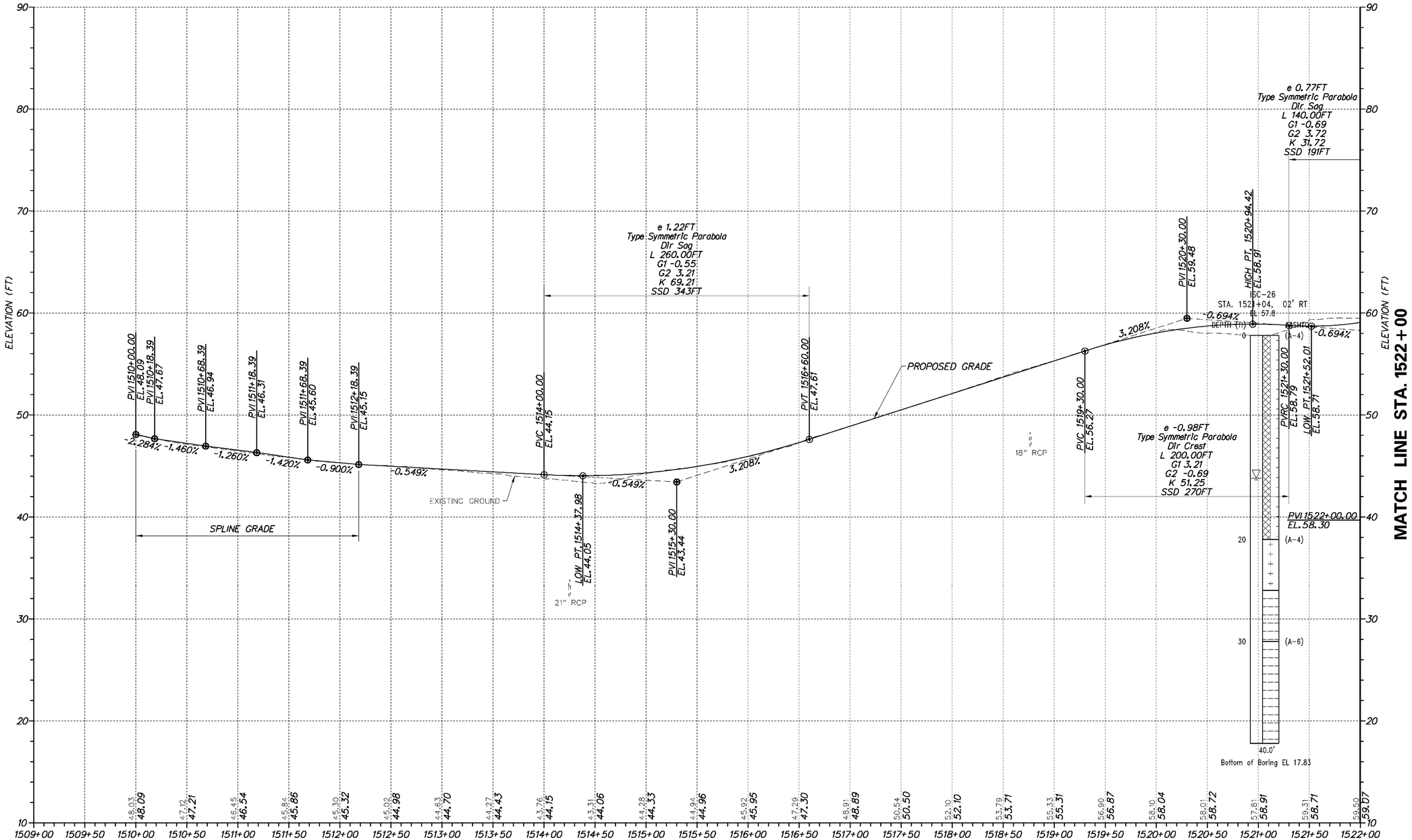

RAMP R

VERTICAL SCALE FEET 0 5 10 15

8/19/2010 9:01:20 AM
M:\PROJECTS\2003\03059_DELTRNPK\SRIMALL\CADD\3009004\PLANS\PF40_RAMPR_RAMPR1.DGN

DELAWARE DEPARTMENT OF TRANSPORTATION

ADDENDUMS / REVISIONS

SCALE 0 50 100 150 FEET

SR1 / I-95 INTERCHANGE - CHRISTIANA MALL ROAD BRIDGE

CONTRACT	BRIDGE NO.	1-223
T201009004	DESIGNED BY:	ZJS
COUNTY		
NEW CASTLE	CHECKED BY:	CDW

PROFILES

SHEET NO.
21
TOTAL SHTS.
164

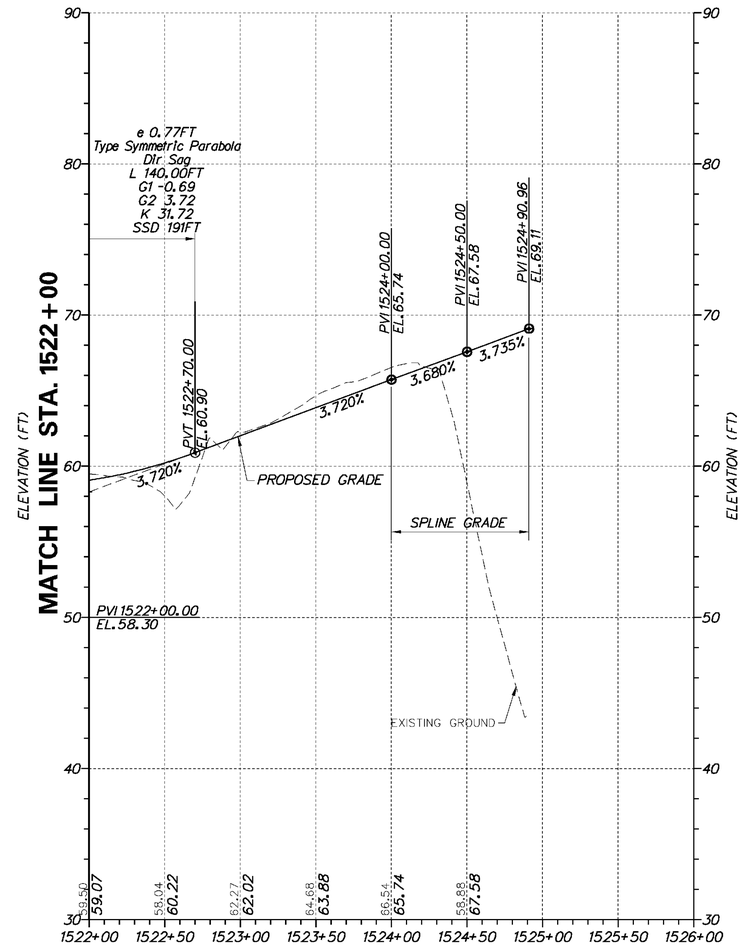

RAMP R

VERTICAL SCALE FEET 0 5 10 15

8/10/2010 5:01:03 PM
M:\PROJECTS\2003\03059_DELTRNPK\SRIMALL\CADD\3009004\PLANS\PF41_RAMPR_RAMPR1.DGN

DELAWARE DEPARTMENT OF TRANSPORTATION	ADDENDUMS / REVISIONS	SCALE 0 50 100 150 FEET	**SR1/I-95 INTERCHANGE - CHRISTIANA MALL ROAD BRIDGE**	CONTRACT T201009004	BRIDGE NO. 1-223	**PROFILES**	SHEET NO. 22
				COUNTY NEW CASTLE	DESIGNED BY: ZJS		TOTAL SHTS. 164
					CHECKED BY: CDW		

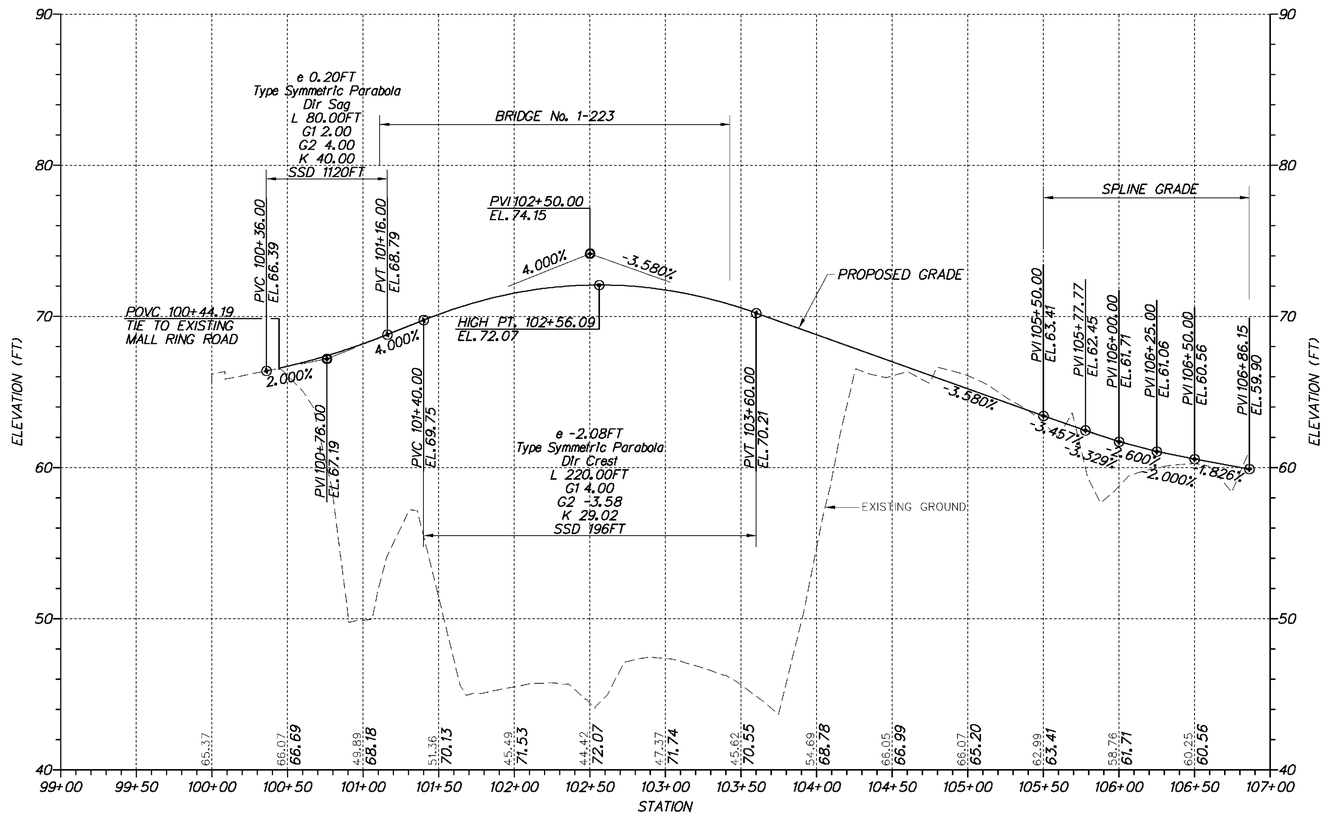

RAMP R1

VERTICAL SCALE FEET 15 10 5 0

DELAWARE DEPARTMENT OF TRANSPORTATION	ADDENDUMS / REVISIONS	SCALE 0 50 100 150 FEET	SR1 / I-95 INTERCHANGE - CHRISTIANA MALL ROAD BRIDGE	CONTRACT T201009004	BRIDGE NO. 1-223	PROFILES	SHEET NO. 23
				COUNTY NEW CASTLE	DESIGNED BY: ZJS		TOTAL SHTS. 164
					CHECKED BY: CDW		

8/13/2010 1:20:36 PM
M:\PROJECTS\2003\03059_DELTRNPK\SR1MALL\CADD\3009004\PLANS\PF42_RAMPR1_RAMPR1.DGN

SOIL RETENTION BLANKET MULCH NOTES

1. RAMP A STA.1270+00 RT. TO STA.1274+00 RT.: INSTALL ONE ROLL WIDTH (6.6') SOIL RETENTION BLANKET MULCH, TYPE 5 (735535). QUANTITY = 293 S.Y.

RIPRAP NOTES:

1. RAMP A STA. 1271+10, 150' RT.: * INSTALL R-5 RIPRAP ON THE SLOPE FROM THE PROPOSED 24" OUTFALL TO THE SEDIMENT FORBAY. QUANTITY OF RIPRAP R-5 (712006) = 11 S.Y.

2. RAMP A STA. 1271+47, 140' RT.: * INSTALL R-5 RIPRAP ON THE SLOPE FROM THE PROPOSED TWIN 36" OUTFALL TO THE SEDIMENT FORBAY. QUANTITY OF RIPRAP R-5 (712006) = 84 S.Y.

* STATION AND OFFSET SHOWN TO THE OUTFALL END OF THE PROPOSED STORM DRAIN PIPE.

ENERGY DISSIPATOR NOTE:

1. THE RIPRAP IN THE ENERGY DISSIPATOR SHALL BE RECESSED ONE FOOT BELOW STREAMBED ELEVATION AND CHOKED WITH BORROW TYPE B (209002) SO THAT ALL OF THE VOIDS IN THE RIPRAP ARE FILLED WITH MATERIAL. THE RIPRAP SHALL THEN BE COVERED WITH 12" CHANNEL BED FILL (712531) TO MATCH EXISTING ELEVATIONS. WHEN ALL EROSION AND SEDIMENT CONTROL MEASURES ARE REMOVED AND THE STREAM RETURNS TO ITS NATURAL FLOW CONDITIONS, THE FLOW MUST REMAIN ABOVE GROUND AND ABOVE THE RIPRAP (I.E. THE FLOW CANNOT BE "LOST" IN THE RIPRAP). IF THIS IS NOT ACHIEVED, THE CONTRACTOR WILL BE REQUIRED TO TAKE CORRECTIVE ACTION AT THE CONTRACTOR'S EXPENSE.

SEE CONTRACT NO. T200809003 FOR INTERCHANGE CONSTRUCTION

ENERGY DISSIPATOR SCHEDULE									
STATION	OFFSET	RIPRAP SIZE	D (FT)	T1 (FT)	T2 (FT)	L (FT)	W1 (FT)	W2 (FT)	EL. (FT)
1275+50	220.0	R-6	2.0	2.5	0.5	18.0	4.0	16.0	25.45

NOTES:
1. STATION AND OFFSET SHOWN TO THE OUTFALL END OF THE EXIST. 48" RCP.
2. ELEVATION IS TOP OF FINISHED GRADE, TOP OF RIPRAP IS 1 FOOT DEPRESSED.

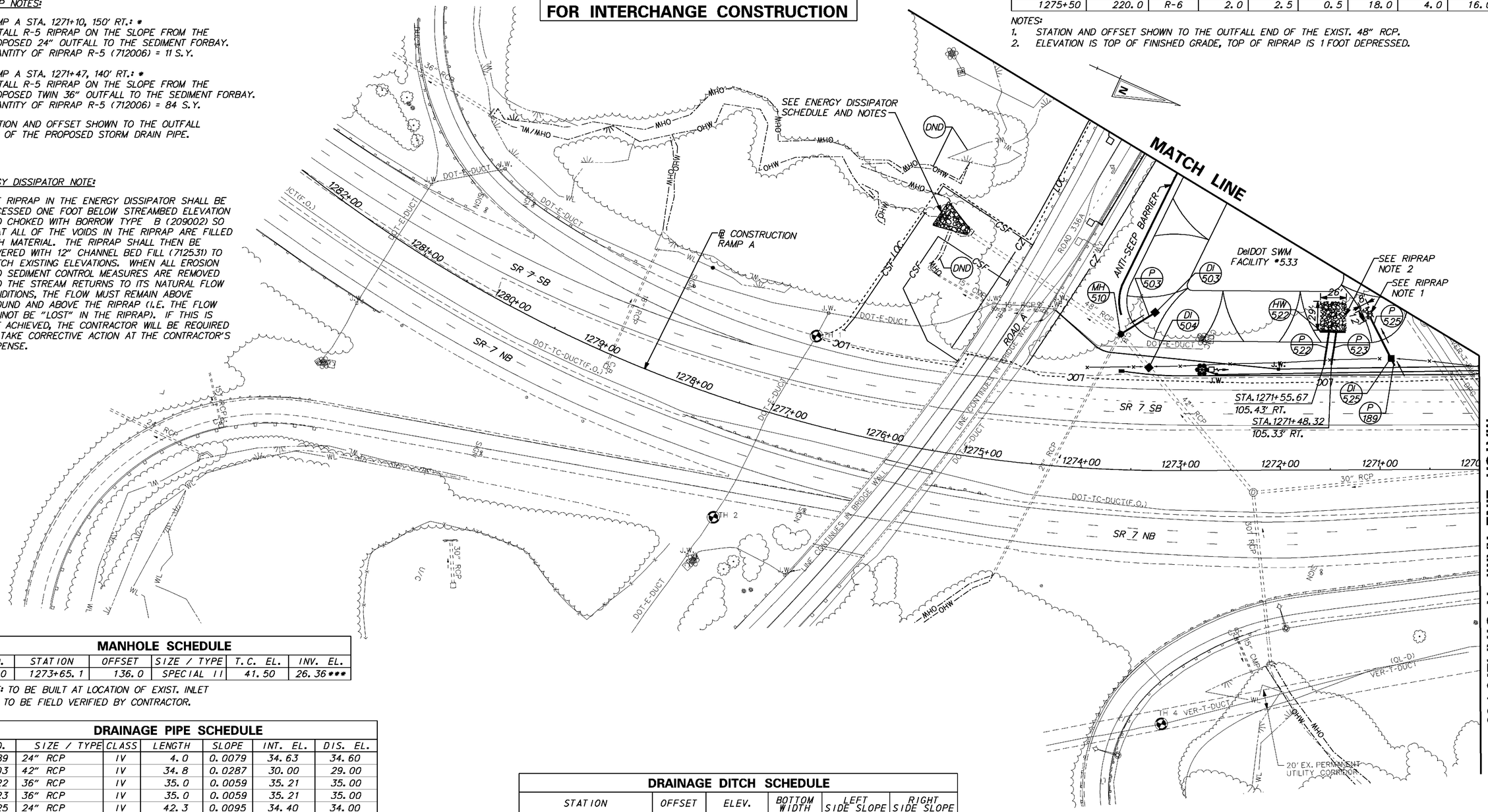

MANHOLE SCHEDULE					
NO.	STATION	OFFSET	SIZE / TYPE	T.C. EL.	INV. EL.
510	1273+65.1	136.0	SPECIAL II	41.50	26.36***

NOTE: TO BE BUILT AT LOCATION OF EXIST. INLET
*** TO BE FIELD VERIFIED BY CONTRACTOR.

DRAINAGE PIPE SCHEDULE						
NO.	SIZE / TYPE	CLASS	LENGTH	SLOPE	INT. EL.	DIS. EL.
189	24" RCP	IV	4.0	0.0079	34.63	34.60
503	42" RCP	IV	34.8	0.0287	30.00	29.00
522	36" RCP	IV	35.0	0.0059	35.21	35.00
523	36" RCP	IV	35.0	0.0059	35.21	35.00
525	24" RCP	IV	42.3	0.0095	34.40	34.00

NOTE: P-189, P-522 AND P-523 SHALL BE TEMPORARILY PLUGGED FOR FUTURE PIPE EXTENSION. PAYMENT FOR PLUG SHALL BE INCIDENTAL TO PIPE ITEM BEING INSTALLED.

DRAINAGE INLET SCHEDULE							
	NO.	STATION	OFFSET	BOX SIZE / TOP	GRATE	T.G. EL.	INV. EL.
	503	SEE SWM PLANS					
**	504	1273+33.4	103.3	66" x 30" TYPE A	1	36.68	27.19
	525	1270+88.3	111.6	48" x 30" TYPE A	1	40.00	34.40

** TO BE BUILT OVER EXIST. 42" PIPE.

DRAINAGE DITCH SCHEDULE					
STATION	OFFSET	ELEV.	BOTTOM WIDTH	LEFT SIDE SLOPE	RIGHT SIDE SLOPE
RAMP A STA. 1270+00	103.0' RT	41.3	2'	4:1	4:1
RAMP A STA. 1270+50	109.0' RT	40.6	2'	4:1	4:1
RAMP A STA. 1271+00	111.5' RT	40.5	2'	EXIST.	3:1
RAMP A STA. 1271+50	110.4' RT	39.8	2'	EXIST.	3:1
RAMP A STA. 1272+00	107.7' RT	38.7	2'	EXIST.	3:1
RAMP A STA. 1272+50	106.9' RT	38.2	2'	EXIST.	3:1
RAMP A STA. 1273+00	104.8' RT	37.3	2'	EXIST.	3:1
RAMP A STA. 1273+50	103.6' RT	36.9	2'	2:1	3:1
RAMP A STA. 1274+00	101.1' RT	37.3	2'	2:1	2:1

9/8/2010 4:28:49 PM
M:\PROJECTS\2003\03059_DELTRNPK\SRIMALL\CADD\3009004\PLANS\DR01_RAMPR1.DGN

DELAWARE DEPARTMENT OF TRANSPORTATION

ADDENDUMS / REVISIONS

SCALE 0 50 100 150 FEET

SR1/I-95 INTERCHANGE - CHRISTIANA MALL ROAD BRIDGE

CONTRACT	BRIDGE NO. 1-223
T201009004	DESIGNED BY: AJP
COUNTY	CHECKED BY: REP
NEW CASTLE	

DRAINAGE PLAN

SHEET NO. 24
TOTAL SHTS. 164

DRAINAGE DITCH SCHEDULE

STATION	OFFSET	ELEV.	BOTTOM WIDTH	LEFT SIDE SLOPE	RIGHT SIDE SLOPE
RAMP G1 STA. 1332+50	54.7' LT	56.8	2'	4:1	6:1
RAMP G1 STA. 1332+71	66.1' LT	56.5	2'	4:1	VARIES
RAMP R1 STA. 104+50	44.7' RT	64.0	0'	4:1	4:1
RAMP R1 STA. 105+00	46.0' RT	62.0	0'	4:1	4:1
RAMP R1 STA. 105+50	58.0' RT	56.2	2'	3:1	4:1
RAMP G1 STA. 1339+50	46.0' RT	46.6	2'	2:1	2:1
RAMP G1 STA. 1339+80	51.0' RT	44.0	2'	2:1	2:1
RAMP G1 STA. 1340+00	55.0' RT	44.2	2'	2:1	2:1
RAMP G1 STA. 1340+35	65.0' RT	44.5	2'	2:1	2:1

DRAINAGE INLET SCHEDULE

NO.	STATION	OFFSET	BOX SIZE / TOP	GRATE	T.G. EL.	INV. EL.
322	1334+08.0	*	34" x 24" TYPE B	1	**	54.60
323	1338+30.0	*	34" x 24" TYPE E	1	**	44.80
362	1339+80.0	*	34" x 24" TYPE B	1	**	42.20
363	1339+39.3	*	34" x 24" TYPE B	1	**	41.55
375	105+15.0	*	SPECIAL I, TYPE E	1	**	51.40
377	105+50.0	58.0	48" x 30" TYPE A	1	56.20	52.00
378	1334+32.1	*	72" x 24" TYPE E	1	**	53.80
381	1332+83.0	*	34" x 24" TYPE E	1	**	52.60
382	1332+63.0	*	34" x 24" TYPE E	1	**	53.10
383	1332+48.0	*	34" x 24" TYPE E	1	**	53.50
391	1339+00.0	*	34" x 24" TYPE B	1	**	46.00
392	1336+16.6	*	72" x 24" TYPE B	1	**	51.40
393	1336+16.4	*	48" x 30" TYPE E	1	**	50.70
395	1337+25.0	*	34" x 24" TYPE E	1	**	46.00
521	SEE SWM PLAN					

* MATCH PROPOSED CURB LINE.
** MATCH FLOWLINE OF PROPOSED CURB AND GUTTER.

FLARED END SECTION SCHEDULE

NO.	SIZE / TYPE	SLOPE	SAFETY GRATE
480	15" RCP	0.0100	YES

DRAINAGE PIPE SCHEDULE

NO.	SIZE / TYPE	CLASS	LENGTH	SLOPE	INT. EL.	DIS. EL.
321	18" CMP	-	SEE STORM DRAIN DOWNSPOUT DETAIL			
322	18" RCP	IV	45.8	0.0131	54.60	54.00
323	18" RCP	IV	106.5	0.0120	44.80	43.50
362	15" RCP	IV	32.0	0.0060	42.20	42.00
363	18" RCP	IV	38.0	0.0070	41.55	41.30
364	18" RCP	IV	98.0	0.0050	40.50	40.00
375	18" RCP	IV	50.9	0.0140	51.40	50.70
376	18" CMP	-	SEE STORM DRAIN DOWNSPOUT DETAIL			
377	18" RCP	IV	58.7	0.0050	52.00	51.70
378	18" RCP	IV	67.8	0.0118	53.80	53.00
381	18" RCP	IV	80.7	0.0050	52.60	52.20
382	15" RCP	IV	16.2	0.0185	53.10	52.80
383	15" RCP	IV	11.2	0.0179	53.50	53.30
391	15" RCP	IV	29.7	0.0100	46.00	45.70
392	18" RCP	IV	28.0	0.0090	51.40	51.15
393	18" RCP	IV	99.8	0.0170	50.70	49.00
395	18" RCP	IV	94.9	0.0110	46.00	45.00
480	15" RCP	IV	19.7	0.0100	44.00	43.80
521A	38"x24" HERCP	IV	156.6	0.0160	33.50	31.00
521B	38"x24" HERCP	IV	154.4	0.0162	33.50	31.00

SEE CONTRACT NO. T200809003 FOR RAMP G1 CONSTRUCTION

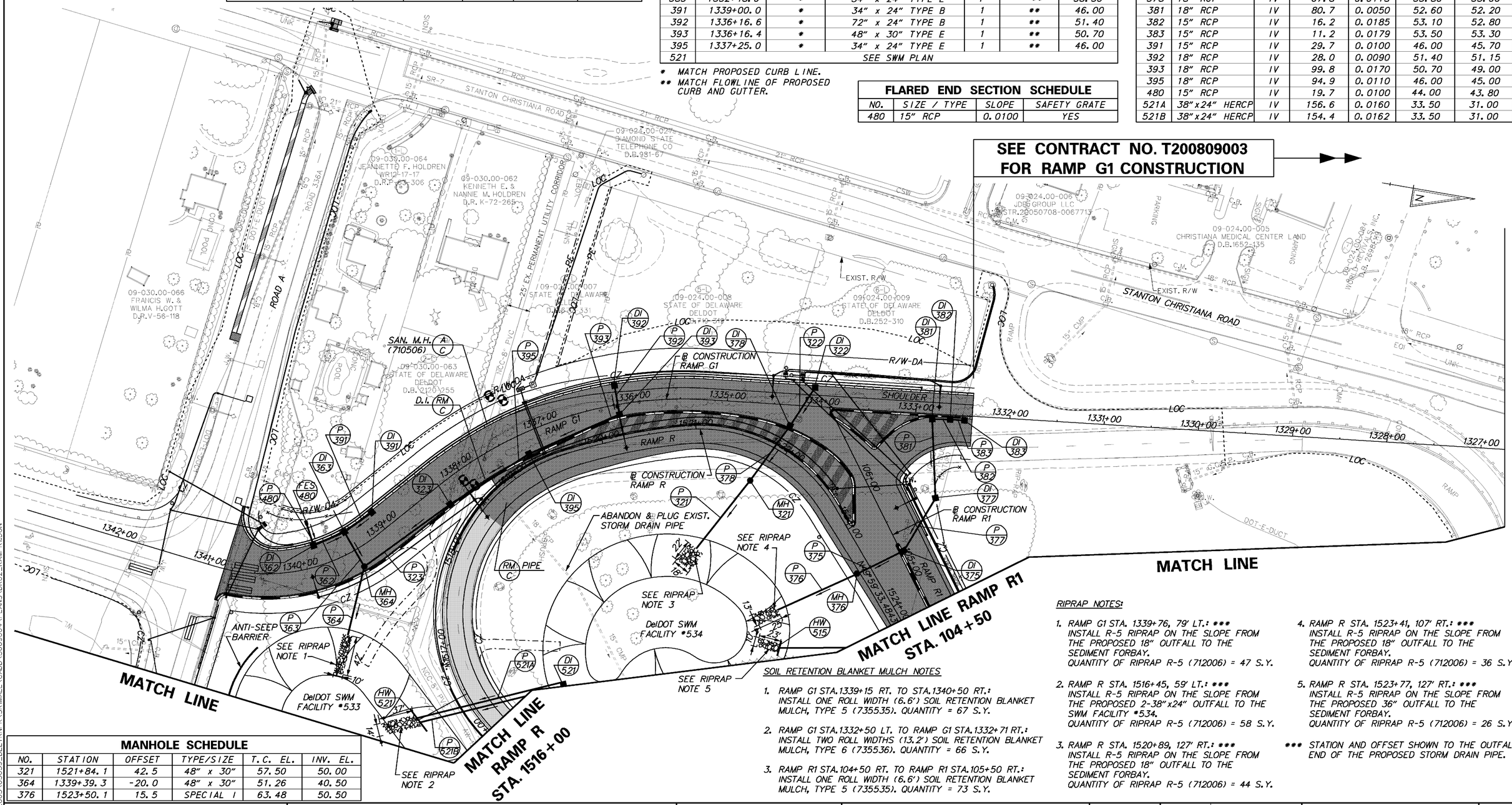

MANHOLE SCHEDULE

NO.	STATION	OFFSET	TYPE/SIZE	T.C. EL.	INV. EL.
321	1521+84.1	42.5	48" x 30"	57.50	50.00
364	1339+39.3	-20.0	48" x 30"	51.26	40.50
376	1523+50.1	15.5	SPECIAL I	63.48	50.50

SOIL RETENTION BLANKET MULCH NOTES

1. RAMP G1 STA.1339+15 RT. TO STA.1340+50 RT.: INSTALL ONE ROLL WIDTH (6.6') SOIL RETENTION BLANKET MULCH, TYPE 5 (735535). QUANTITY = 67 S.Y.
2. RAMP G1 STA.1332+50 LT. TO RAMP G1 STA.1332+71 RT.: INSTALL TWO ROLL WIDTHS (13.2') SOIL RETENTION BLANKET MULCH, TYPE 6 (735536). QUANTITY = 66 S.Y.
3. RAMP R1 STA.104+50 RT. TO RAMP R1 STA.105+50 RT.: INSTALL ONE ROLL WIDTH (6.6') SOIL RETENTION BLANKET MULCH, TYPE 5 (735535). QUANTITY = 73 S.Y.

RIPRAP NOTES:

1. RAMP G1 STA. 1339+76, 79' LT.: *** INSTALL R-5 RIPRAP ON THE SLOPE FROM THE PROPOSED 18" OUTFALL TO THE SEDIMENT FORBAY. QUANTITY OF RIPRAP R-5 (712006) = 47 S.Y.
2. RAMP R STA. 1516+45, 59' LT.: *** INSTALL R-5 RIPRAP ON THE SLOPE FROM THE PROPOSED 2-38"x24" OUTFALL TO THE SWM FACILITY #534. QUANTITY OF RIPRAP R-5 (712006) = 58 S.Y.
3. RAMP R STA. 1520+89, 127' RT.: *** INSTALL R-5 RIPRAP ON THE SLOPE FROM THE PROPOSED 18" OUTFALL TO THE SEDIMENT FORBAY. QUANTITY OF RIPRAP R-5 (712006) = 44 S.Y.
4. RAMP R STA. 1523+41, 107' RT.: *** INSTALL R-5 RIPRAP ON THE SLOPE FROM THE PROPOSED 18" OUTFALL TO THE SEDIMENT FORBAY. QUANTITY OF RIPRAP R-5 (712006) = 36 S.Y.
5. RAMP R STA. 1523+77, 127' RT.: *** INSTALL R-5 RIPRAP ON THE SLOPE FROM THE PROPOSED 36" OUTFALL TO THE SEDIMENT FORBAY. QUANTITY OF RIPRAP R-5 (712006) = 26 S.Y.

*** STATION AND OFFSET SHOWN TO THE OUTFALL END OF THE PROPOSED STORM DRAIN PIPE.

10/1/2010 12:31:14 PM
M:\PROJECTS\2003\03059_DELTRNPK\SRIMALL\CADD\3009004\PLANS\DR02_RAMPR1.DGN

DELAWARE DEPARTMENT OF TRANSPORTATION

ADDENDUMS / REVISIONS

SCALE 0 50 100 150 FEET

SR1/I-95 INTERCHANGE - CHRISTIANA MALL ROAD BRIDGE

CONTRACT	BRIDGE NO. 1-223	SHEET NO.
T201009004	DESIGNED BY: AJP	25
COUNTY		TOTAL SHTS.
NEW CASTLE	CHECKED BY: REP	164

DRAINAGE PLAN

SEE CONTRACT NO. T200809003 INTERCHANGE CONSTRUCTION

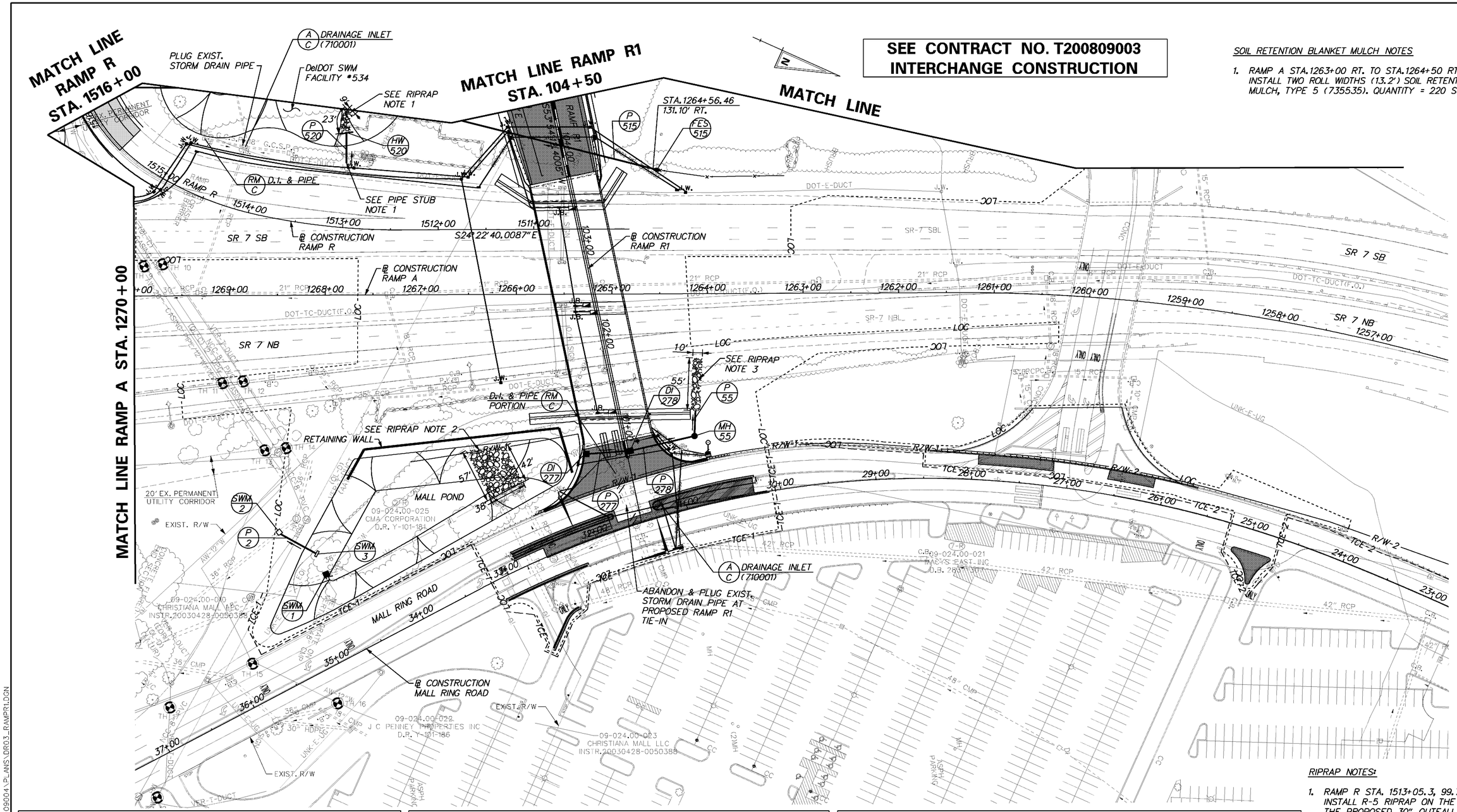

SOIL RETENTION BLANKET MULCH NOTES

1. RAMP A STA.1263+00 RT. TO STA.1264+50 RT.: INSTALL TWO ROLL WIDTHS (13.2') SOIL RETENTION BLANKET MULCH, TYPE 5 (735535). QUANTITY = 220 S.Y.

DRAINAGE PIPE SCHEDULE

NO.	SIZE / TYPE	CLASS	LENGTH	SLOPE	INT. EL.	DIS. EL.
2	36" RCP	III	42.2	0.0050	47.00	46.79
55	18" CMP	-	SEE STORM DRAIN DOWNSPOUT DETAIL			
277	18" RCP	IV	46.7	0.0150	62.50	61.80
278	18" RCP	IV	62.1	0.0260	61.60	60.00
515	36" RCP	V	284.9	0.0158	41.50	37.00
520	30" RCP	IV	32.0	0.0040	36.13	36.00

PIPE STUB NOTES

1. RAMP R STA.1513+02, 67.9' RT: STUB P-520 AND INSTALL TEMPORARY PIPE PLUG FOR FUTURE PIPE EXTENSION. PAYMENT FOR PLUG SHALL BE INCIDENTAL TO PIPE ITEM BEING INSTALLED.

DRAINAGE DITCH SCHEDULE

STATION	OFFSET	ELEV.	BOTTOM WIDTH	LEFT SIDE SLOPE	RIGHT SIDE SLOPE
RAMP A STA. 1263+50	123.0' RT	42.5	2'	2:1	2:1
RAMP A STA. 1264+00	122.4' RT	42.0	2'	2:1	2:1
RAMP A STA. 1264+50	129.5' RT	41.5	2'	2:1	2:1

MANHOLE SCHEDULE

NO.	STATION	OFFSET	SIZE / TYPE	T.C. EL.	INV. EL.
SWM-2	34+91.5	150.6	66" x 66"	60.00	45.61
55	1264+14.3	149.1	48" x 30"	64.00	58.50

DRAINAGE INLET SCHEDULE

NO.	STATION	OFFSET	BOX SIZE / TOP	GRATE	T.G. EL.	INV. EL.
SWM-1	34+68.4	88.4	SEE MALL POND PLAN	-	57.50	46.76
SWM-3	34+67.2	112.0	SEE MALL POND PLAN	-	57.17	47.00
277	100+81.00	*	34" x 24" TYPE A	1	**	62.50
278	100+75.00	*	34" x 24" TYPE E	1	**	61.60

* MATCH PROPOSED CURB LINE.
** MATCH FLOWLINE OF PROPOSED CURB AND GUTTER.

FLARED END SECTION SCHEDULE

NO.	SIZE / TYPE	SLOPE	SAFETY GRATE
515	36" RCP	0.0158	YES

RIPRAP NOTES:

1. RAMP R STA. 1513+05.3, 99.7' RT.: *** INSTALL R-5 RIPRAP ON THE SLOPE FROM THE PROPOSED 30" OUTFALL TO THE SEDIMENT FORBAY. QUANTITY OF RIPRAP R-5 (712006) = 23 S.Y.
2. MALL RING ROAD STA. 32+65.9, 80.3' RT.: *** INSTALL R-5 AT THE EX. 2-48" OUTFALL TO THE MALL POND. QUANTITY OF RIPRAP R-5 (712006) = 212 S.Y.
3. MALL RING ROAD STA. 30+69.2, 97.7' RT.: *** INSTALL R-5 ON THE SLOPE FROM THE PROPOSED 18" OUTFALL TO THE EXISTING SWALE. QUANTITY OF RIPRAP R-5 (712006) = 62 S.Y

*** STATION AND OFFSET SHOWN TO THE OUTFALL END OF STORM DRAIN PIPE.

DELAWARE DEPARTMENT OF TRANSPORTATION

ADDENDUMS / REVISIONS

SCALE 0 50 100 150 FEET

SR1/I-95 INTERCHANGE - CHRISTIANA MALL ROAD BRIDGE

CONTRACT	BRIDGE NO.	1-223	SHEET NO.
T201009004	DESIGNED BY: AJP		26
COUNTY			TOTAL SHTS.
NEW CASTLE	CHECKED BY: REP		164

DRAINAGE PLAN

9/13/2010 9:16:32 AM
M:\PROJECTS\2003\03059_DELTRNPK\SR1MALL\CADD\3009004\PLANS\DR03_RAMPR1.DGN

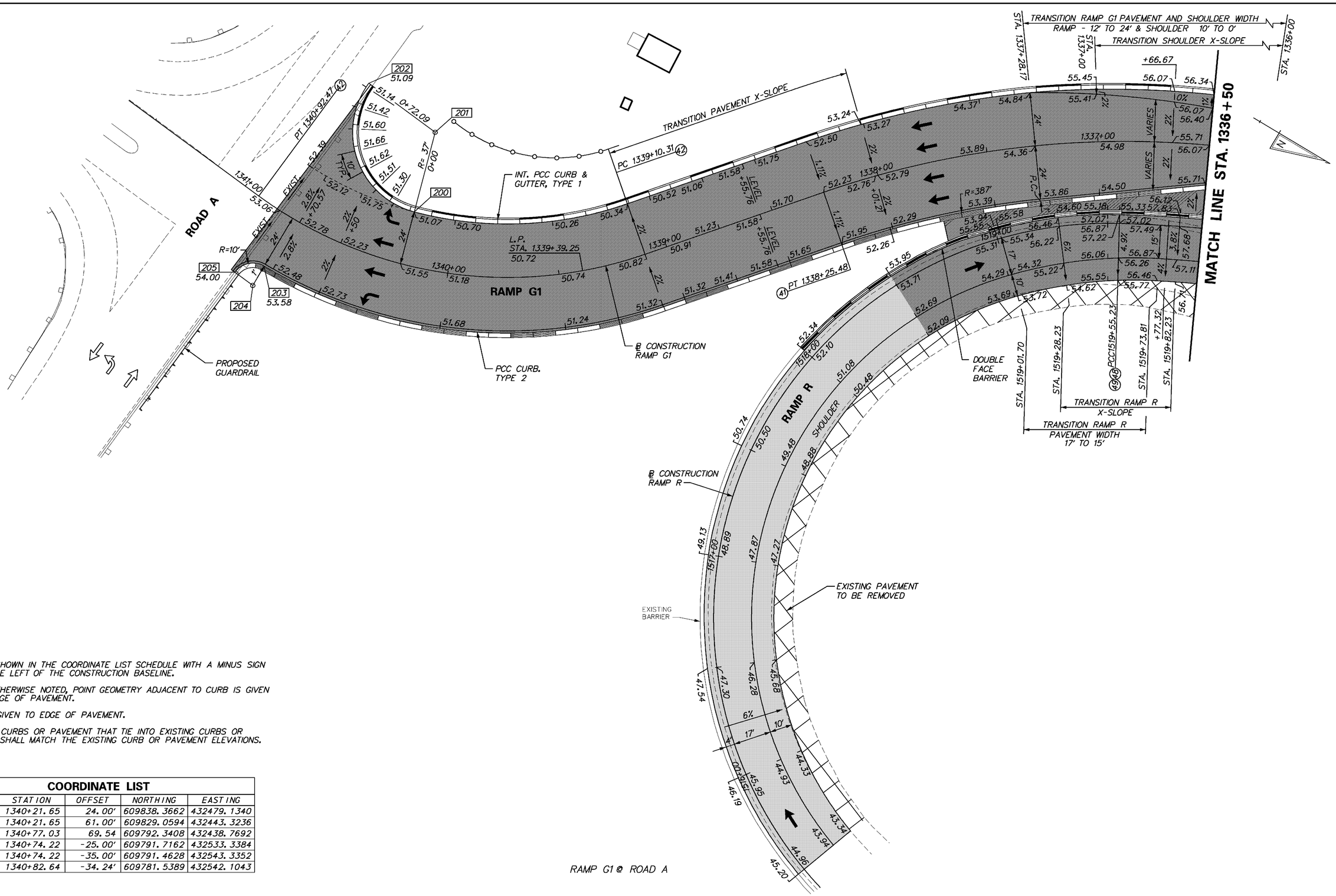

NOTES:

1. OFFSETS SHOWN IN THE COORDINATE LIST SCHEDULE WITH A MINUS SIGN ARE TO THE LEFT OF THE CONSTRUCTION BASELINE.
2. UNLESS OTHERWISE NOTED, POINT GEOMETRY ADJACENT TO CURB IS GIVEN TO THE EDGE OF PAVEMENT.
3. RADII ARE GIVEN TO EDGE OF PAVEMENT.
4. PROPOSED CURBS OR PAVEMENT THAT TIE INTO EXISTING CURBS OR PAVEMENT SHALL MATCH THE EXISTING CURB OR PAVEMENT ELEVATIONS.

COORDINATE LIST

POINT NO.	STATION	OFFSET	NORTHING	EASTING
200	1340+21.65	24.00'	609838.3662	432479.1340
201	1340+21.65	61.00'	609829.0594	432443.3236
202	1340+77.03	69.54	609792.3408	432438.7692
203	1340+74.22	-25.00'	609791.7162	432533.3384
204	1340+74.22	-35.00'	609791.4628	432543.3352
205	1340+82.64	-34.24'	609781.5389	432542.1043

8/19/2010 9:06:28 AM
M:\PROJECTS\2003\03059_DELTRNPK\SRIMALL\CADD\3009004\PLANS\CP35_GG_RAMPR1.DGN

DELAWARE DEPARTMENT OF TRANSPORTATION

ADDENDUMS / REVISIONS

SCALE 0 20 40 60 FEET

SR1/I-95 INTERCHANGE - CHRISTIANA MALL ROAD BRIDGE

CONTRACT	BRIDGE NO.	1-223
T201009004	DESIGNED BY:	EGD
COUNTY		
NEW CASTLE	CHECKED BY:	CDW

GRADES AND GEOMETRICS INTERSECTION DETAILS

SHEET NO. 27
TOTAL SHTS. 164

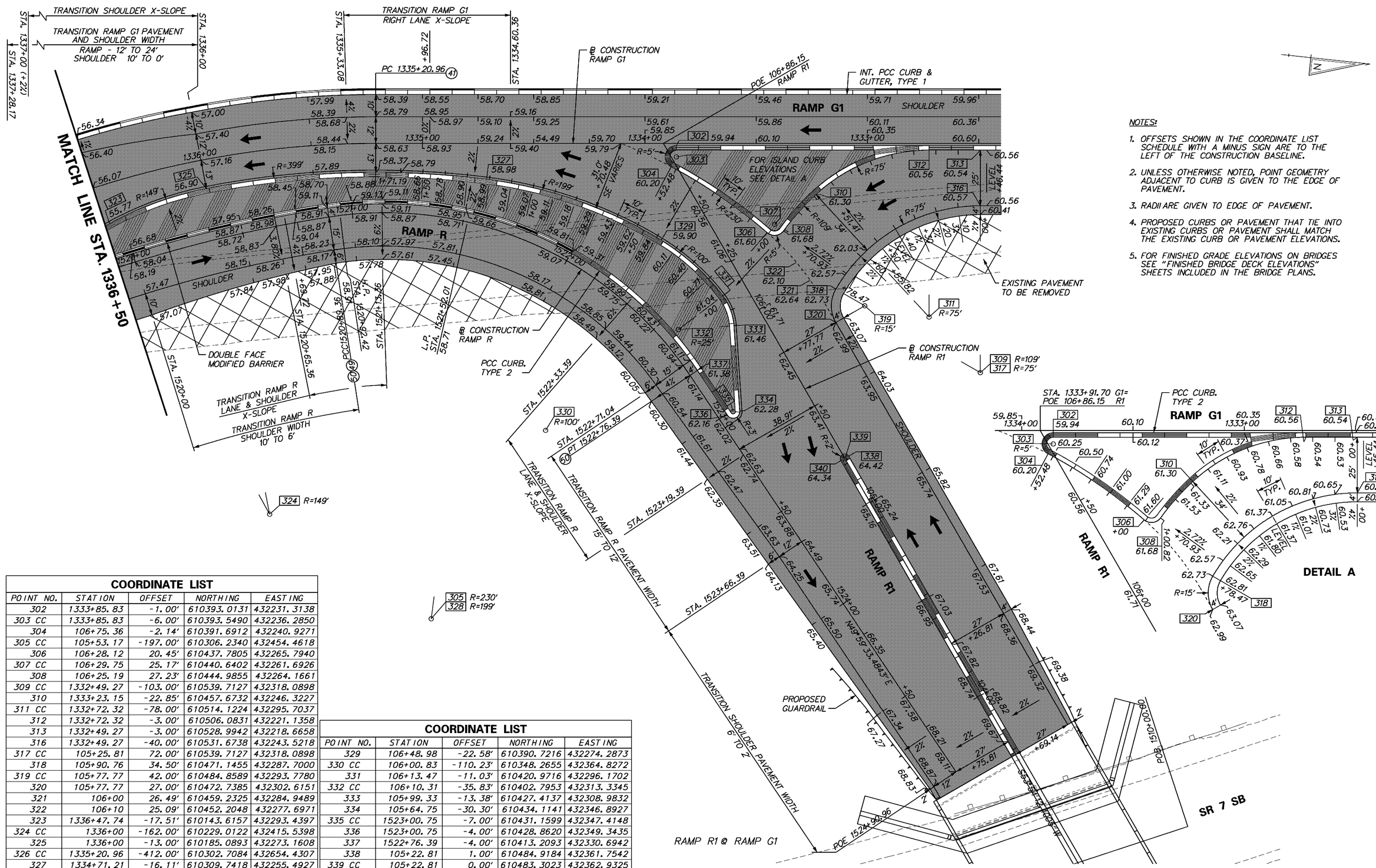

NOTES:

1. OFFSETS SHOWN IN THE COORDINATE LIST SCHEDULE WITH A MINUS SIGN ARE TO THE LEFT OF THE CONSTRUCTION BASELINE.
2. UNLESS OTHERWISE NOTED, POINT GEOMETRY ADJACENT TO CURB IS GIVEN TO THE EDGE OF PAVEMENT.
3. RADII ARE GIVEN TO EDGE OF PAVEMENT.
4. PROPOSED CURBS OR PAVEMENT THAT TIE INTO EXISTING CURBS OR PAVEMENT SHALL MATCH THE EXISTING CURB OR PAVEMENT ELEVATIONS.
5. FOR FINISHED GRADE ELEVATIONS ON BRIDGES SEE "FINISHED BRIDGE DECK ELEVATIONS" SHEETS INCLUDED IN THE BRIDGE PLANS.

COORDINATE LIST

POINT NO.	STATION	OFFSET	NORTHING	EASTING
302	1333+85.83	-1.00'	610393.0131	432231.3138
303 CC	1333+85.83	-6.00'	610393.5490	432236.2850
304	106+75.36	-2.14'	610391.6912	432240.9271
305 CC	105+53.17	-197.00'	610306.2340	432454.4618
306	106+28.12	20.45'	610437.7805	432265.7940
307 CC	106+29.75	25.17'	610440.6402	432261.6926
308	106+25.19	27.23'	610444.9855	432264.1661
309 CC	1332+49.27	-103.00'	610539.7127	432318.0898
310	1333+23.15	-22.85'	610457.6732	432246.3227
311 CC	1332+72.32	-78.00'	610514.1224	432295.7037
312	1332+72.32	-3.00'	610506.0831	432221.1358
313	1332+49.27	-3.00'	610528.9942	432218.6658
316	1332+49.27	-40.00'	610531.6738	432243.5218
317 CC	105+25.81	72.00'	610539.7127	432318.0898
318	105+90.76	34.50'	610471.1455	432287.7000
319 CC	105+77.77	42.00'	610484.8589	432293.7780
320	105+77.77	27.00'	610472.7385	432302.6151
321	106+00	26.49'	610459.2325	432284.9489
322	106+10	25.09'	610452.2048	432277.6971
323	1336+47.74	-17.51'	610143.6157	432293.4397
324 CC	1336+00	-162.00'	610229.0122	432415.5398
325	1336+00	-13.00'	610185.0893	432273.1608
326 CC	1335+20.96	-412.00'	610302.7084	432654.4307
327	1334+71.21	-16.11'	610309.7418	432255.4927
328 CC	1334+96.02	-213.56'	610306.2340	432454.4618

COORDINATE LIST

POINT NO.	STATION	OFFSET	NORTHING	EASTING
329	106+48.98	-22.58'	610390.7216	432274.2873
330 CC	106+00.83	-110.23'	610348.2655	432364.8272
331	106+13.47	-11.03'	610420.9716	432296.1702
332 CC	106+10.31	-35.83'	610402.7953	432313.3345
333	105+99.33	-13.38'	610427.4137	432308.9832
334	105+64.75	-30.30'	610434.1141	432346.8927
335 CC	1523+00.75	-7.00'	610431.1599	432347.4148
336	1523+00.75	-4.00'	610428.8620	432349.3435
337	1522+76.39	-4.00'	610413.2093	432330.6942
338	105+22.81	1.00'	610484.9184	432361.7542
339 CC	105+22.81	0.00'	610483.3023	432362.9325
340	105+22.81	-1.00'	610481.6863	432364.1108

8/19/2010 9:18:26 AM
M:\PROJECTS\2003\03059_DELTRNPK\SRIMALL\CADD\3009004\PLANS\CP36_GG_RAMPR1.DGN

DELAWARE DEPARTMENT OF TRANSPORTATION

ADDENDUMS / REVISIONS

SCALE 0 20 40 60 FEET

SR1/I-95 INTERCHANGE - CHRISTIANA MALL ROAD BRIDGE

CONTRACT	BRIDGE NO.	1-223
T201009004	DESIGNED BY:	EGD
COUNTY		
NEW CASTLE	CHECKED BY:	CDW

GRADES AND GEOMETRICS INTERSECTION DETAILS

SHEET NO. 28
TOTAL SHTS. 164

COORDINATE LIST				
POINT NO.	STATION	OFFSET	NORTHING	EASTING
113	30+68.47	45.03'	610827.5009	432697.8674
114	0+49.22	72.80'	610821.1343	432702.7117
115	0+89.22	71.98'	610796.9132	432670.8788
116	0+60.73	43.90'	610791.0047	432710.4400
117	0+96.34	79.00'	610798.3903	432660.9885
118	0+96.34	29.00'	610757.9892	432690.4461
119	0+70.00	2.00'	610751.6884	432727.6334
120	0+70.00	-2.00'	610748.4563	432729.9900
121	1+01.50	-41.00'	610698.3832	432727.5112
122	1+01.50	-116.00'	610637.7810	432771.6970
123	0+50.90	-60.62'	610712.3383	432779.9618
124	0+91.38	-104.93'	610652.6897	432773.3496
125	0+32.34	-94.12'	610696.2062	432814.6897
126	32+39.71	45.00'	610694.1402	432816.8650
127	32+87.13	18.00'	610681.4747	432871.2756
128	31+78.57	18.00'	610757.8613	432791.4896
129	31+78.57	15.00'	610759.9126	432793.6787
130	31+78.57	12.00'	610761.9638	432795.8679
131	32+87.13	12.00'	610686.0272	432875.1835
132	32+11.47	-24.00'	610698.0918	432916.8428
133	32+19.58	-24.00'	610740.8237	432833.2730
134	32+89.56	-90.09'	610762.0505	432943.3562
135	32+62.69	-68.33'	610762.0223	432910.4161
136	32+45.09	-86.00'	610786.0223	432910.3955
137	32+45.11	-62.00'	610768.4699	432894.0274
138	30+27.60	17.43'	610877.8213	432695.7271
139	31+29.68	16.64'	610795.8779	432795.8779
140	31+29.46	11.65'	610799.2755	432763.0626
141	31+30.03	6.71'	610802.0535	432767.2198
142	30+14.77	0.0	610898.3145	432702.8956

NOTES:

1. OFFSETS SHOWN IN THE COORDINATE LIST SCHEDULE WITH A MINUS SIGN ARE TO THE LEFT OF THE CONSTRUCTION BASELINE.
2. UNLESS OTHERWISE NOTED, POINT GEOMETRY ADJACENT TO CURB IS GIVEN TO THE EDGE OF PAVEMENT.
3. RADII ARE GIVEN TO EDGE OF PAVEMENT.
4. PROPOSED CURBS OR PAVEMENT THAT TIE INTO EXISTING CURBS OR PAVEMENT SHALL MATCH THE EXISTING CURB OR PAVEMENT ELEVATIONS.
5. FOR FINISHED GRADE ELEVATIONS ON BRIDGES SEE "FINISHED BRIDGE DECK ELEVATIONS" SHEETS INCLUDED IN THE BRIDGE PLANS.

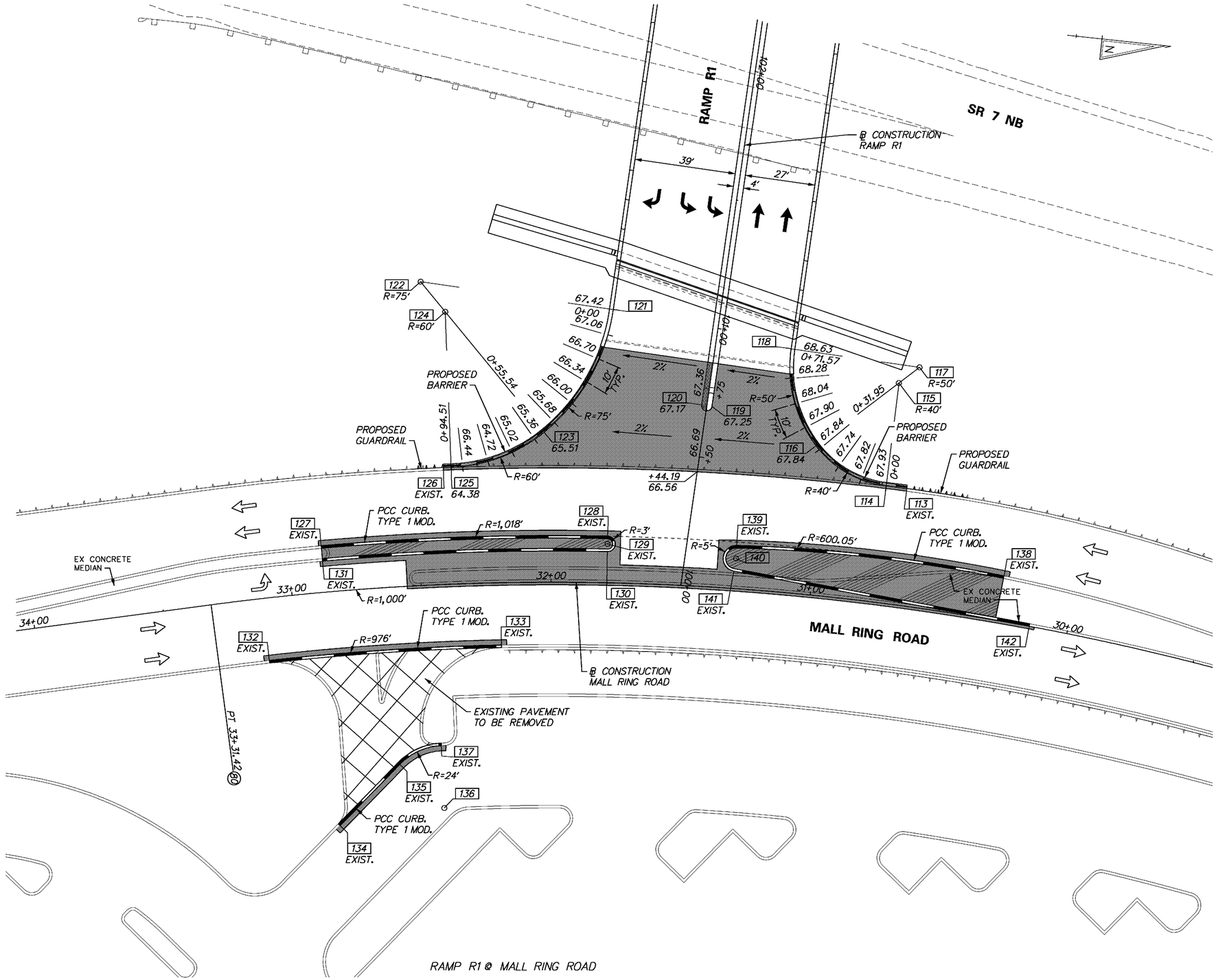

8/19/2010 9:35:41 AM
M:\PROJECTS\2003\03059_DELTRNPK\SR1MALL\CADD\3009004\PLANS\CP39_GG_RAMPR1.DGN

DELAWARE DEPARTMENT OF TRANSPORTATION

ADDENDUMS / REVISIONS

SCALE 0 20 40 60 FEET

SR1/I-95 INTERCHANGE - CHRISTIANA MALL ROAD BRIDGE

CONTRACT	BRIDGE NO. 1-223
T201009004	DESIGNED BY: EGD
COUNTY	
NEW CASTLE	CHECKED BY: CDW

GRADES AND GEOMETRICS INTERSECTION DETAILS

SHEET NO. 29
TOTAL SHTS. 164

COORDINATE LIST

POINT NO.	STATION	OFFSET	NORTHING	EASTING	NOTES
400	-	-	609759.0452	432264.1799	CENTERLINE BUS STOP PAD
401	-	-	609754.5755	432259.5971	EL. 47.06
402	-	-	609756.0529	432247.6884	EL. 46.87
403	-	-	609758.5158	432227.8406	EL. 46.55
404	-	-	609760.9787	432207.9928	EL. 46.24
405	-	-	609763.4416	432188.1451	EL. 45.87
406	-	-	609765.9044	432168.2973	EL. 45.42
407	-	-	609768.3673	432148.4495	EL. 44.89
408	-	-	609770.8302	432128.6017	EL. 44.26
409	-	-	609773.2931	432108.7540	EL. 43.59
410	-	-	609775.7559	432088.9062	EL. 42.92
411	-	-	609778.2188	432069.0584	EL. 42.25
412	-	-	609780.6817	432049.2106	EL. 41.58
413	-	-	609783.1446	432029.3629	EL. 40.91
414	-	-	609785.6075	432009.5151	EL. 40.24
415	-	-	609786.4876	432002.4251	EL. 40.00
416	-	-	609788.3150	431997.3937	EL. 39.71
417	-	-	609791.2277	431994.2715	EL. 39.71
418	-	-	609789.9794	431991.7724	CENTERLINE CURB RAMP
419	-	-	609781.5256	432001.8094	EL. 40.08
420	-	-	609784.1145	431994.6816	EL. 39.73
421	-	-	609787.9036	431990.5113	EL. 39.61
422	-	-	609802.1699	431924.1629	CENTERLINE CURB RAMP

NOTES:

1. UNLESS OTHERWISE NOTED, POINT GEOMETRY ADJACENT TO CURB IS GIVEN TO THE EDGE OF PAVEMENT.
2. RADII ARE GIVEN TO EDGE OF PAVEMENT.
3. PROPOSED CURBS OR PAVEMENT THAT TIE INTO EXISTING CURBS OR PAVEMENT SHALL MATCH THE EXISTING CURB OR PAVEMENT ELEVATIONS.

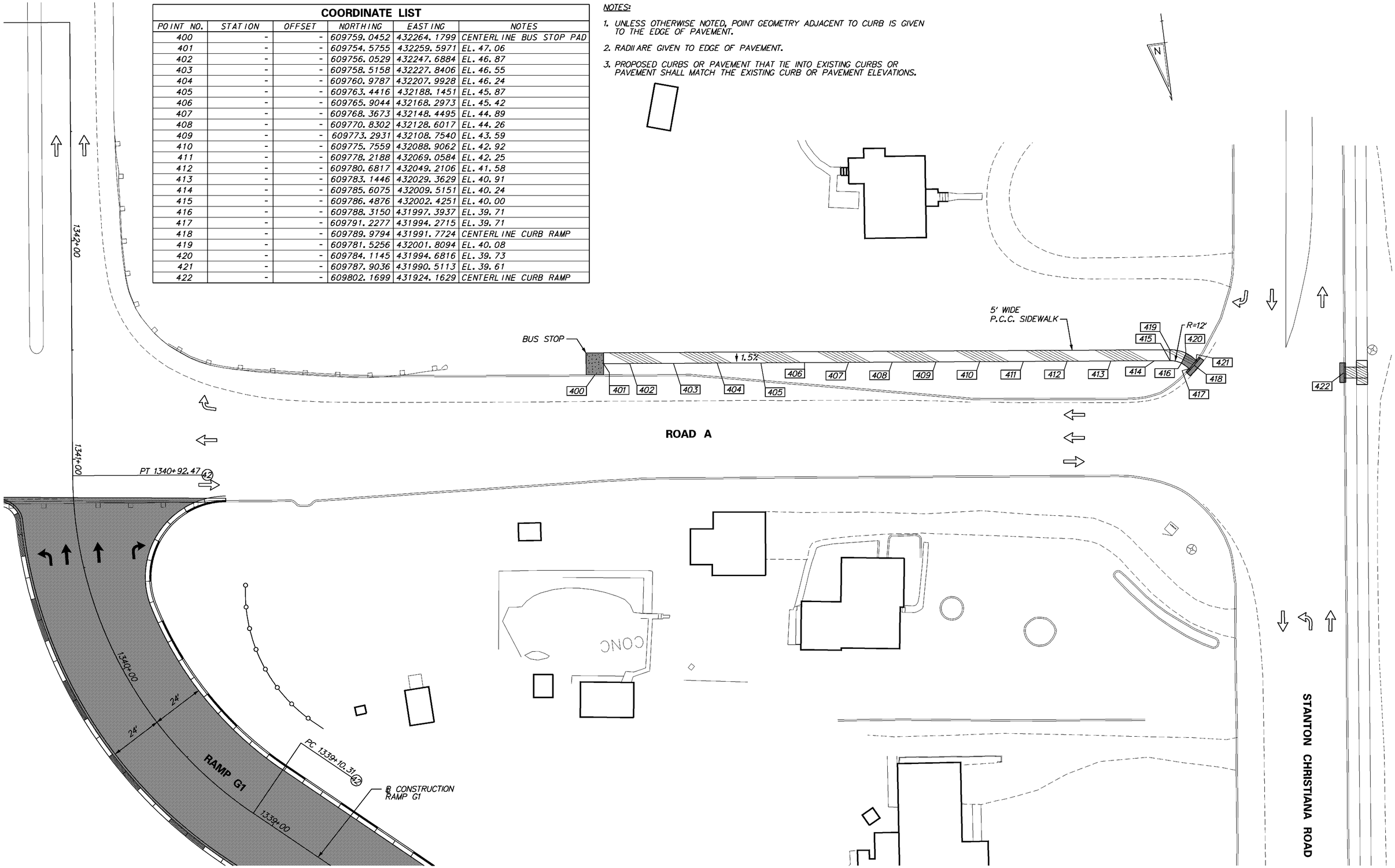

10/6/2010 12:01:38 PM
M:\projects\2003\03059_deltrnpk\SR1Mall\Cadd\3009004\Plans\cp40_gg_RampR1.dgn

DELAWARE DEPARTMENT OF TRANSPORTATION	ADDENDUMS / REVISIONS	SCALE 0 20 40 60 FEET	SR1/I-95 INTERCHANGE - CHRISTIANA MALL ROAD BRIDGE	CONTRACT T201009004	BRIDGE NO. 1-223	GRADES AND GEOMETRICS INTERSECTION DETAILS	SHEET NO. 29A
				COUNTY NEW CASTLE	DESIGNED BY: EGD		TOTAL SHTS. 164
					CHECKED BY: CDW		

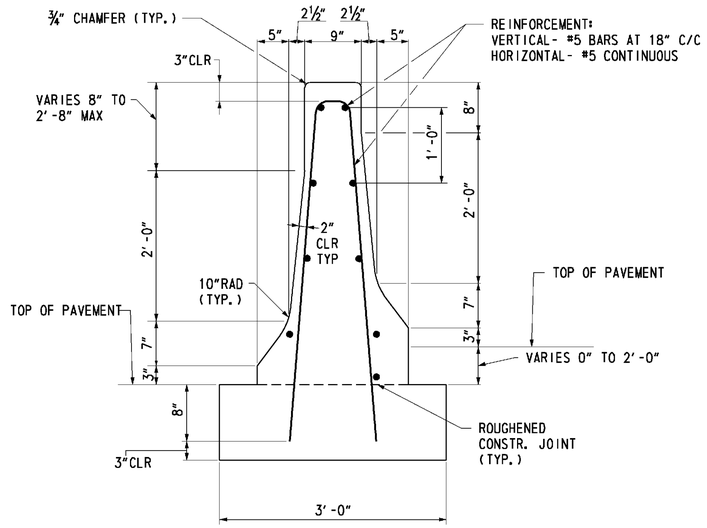

P.C.C. SAFETY BARRIER PERMANENT, DOUBLE FACE BIFURCATED TYPE 1 (720651)

42 INCH F-SHAPE (0" TO 2'-0")

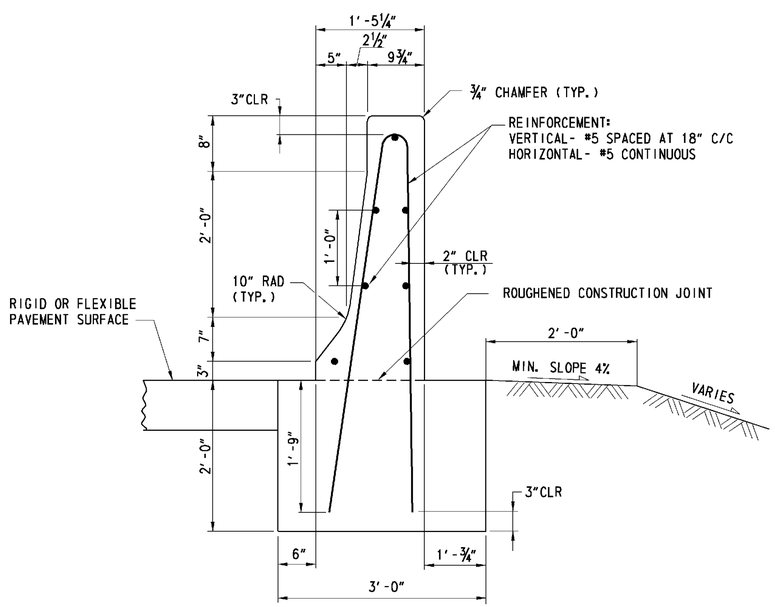

P.C.C. SAFETY BARRIER PERMANENT, SINGLE FACE (720529)

42 INCH F-SHAPE (FREE STANDING - FILL)

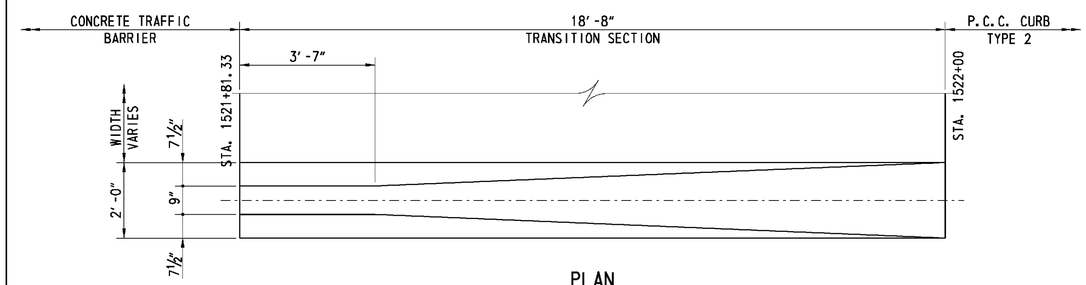

PLAN

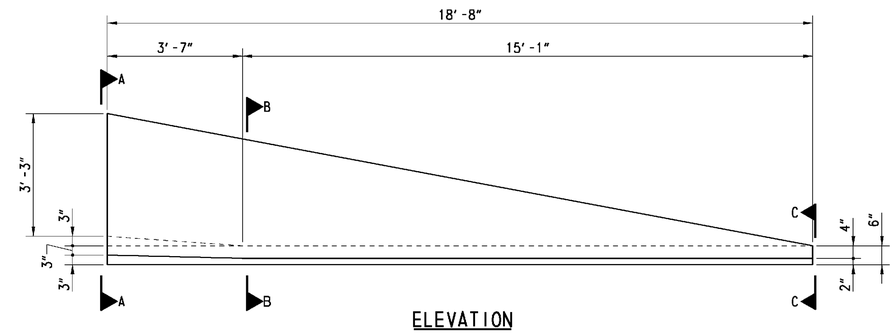

ELEVATION

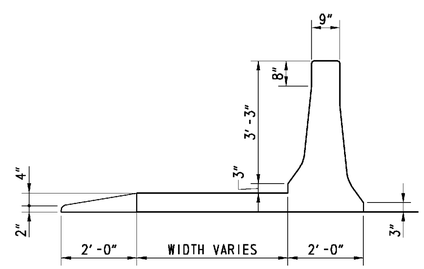

SECTION A-A

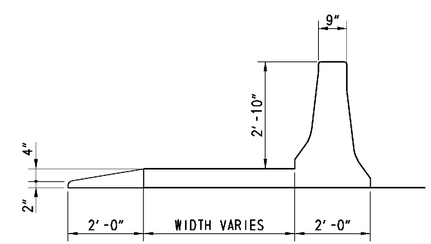

SECTION B-B

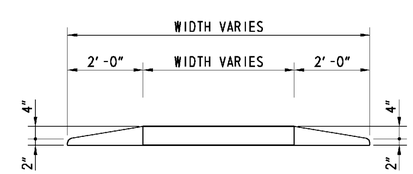

SECTION C-C

RAMP R BARRIER TRANSITION DETAILS

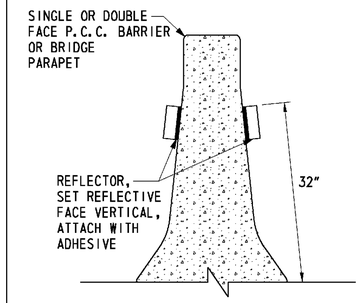

REFLECTOR DETAIL

REFLECTOR DETAIL NOTES:

1. COLOR OF REFLECTOR FACING TRAFFIC SHALL MATCH ADJACENT LANE LINE COLOR.
2. REFLECTOR SHALL HAVE A RED REFLECTOR ON THE BACK. SPACING OF THE REFLECTORS ON P.C.C. SAFETY BARRIER, PERMANENT AND BRIDGE PARAPETS SHALL BE 100 FEET IN TANGENT SECTIONS, AND PER DELDOT MUTCD IN CURVED SECTIONS.
3. ALL COSTS SHALL BE INCLUDED IN ITEMS 720544-REFLECTORS, WHITE, CONCRETE AND 720545-REFLECTORS, YELLOW, CONCRETE.

P.C.C. SAFETY BARRIER NOTES:

1. ALL CONCRETE SHALL BE 4500 PSI. BARRIER AND FOOTING SHALL BE CAST SEPARATELY.
2. ALL REINFORCING BARS SHALL BE ASTM A615, GRADE 60. ALL BARS SHALL BE EPOXY COATED.
3. ALL REINFORCING BAR LAP SPLICES SHALL BE 24" MINIMUM.
4. CONTRACTION JOINTS SHALL BE SPACED AT 20'-0".
5. BARRIER FOOTER AND BARRIER FORMS SHALL BE REMOVED PRIOR TO PLACING PAVEMENT.

9/13/2010 10:11:01 AM
M:\PROJECTS\2003\03059_DELTRNPK\SRIMALL\CADD\3009004\PLANS\DT01_RAMPR1.DGN

DELAWARE DEPARTMENT OF TRANSPORTATION	ADDENDUMS / REVISIONS	NOT TO SCALE	SR1/I-95 INTERCHANGE - CHRISTIANA MALL ROAD BRIDGE	CONTRACT T201009004	BRIDGE NO. 1-223	CONSTRUCTION DETAILS	SHEET NO. 30
				COUNTY NEW CASTLE	DESIGNED BY: RMB		TOTAL SHTS. 164
					CHECKED BY: DWD		

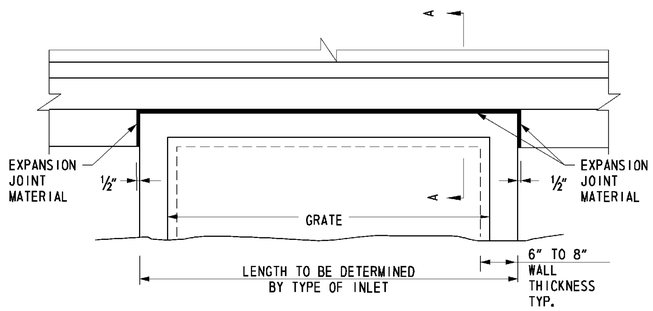

PLAN

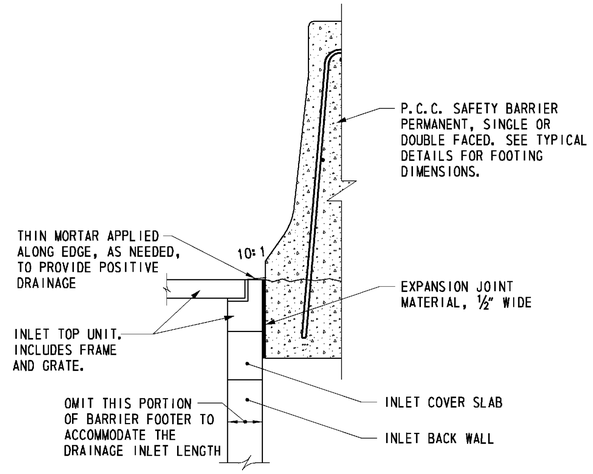

SECTION A-A

NOTE:
THE COST FOR THE THIN MORTAR AND EXPANSION JOINT MATERIAL SHALL BE INCLUDED IN THE UNIT PRICE BID FOR THE DRAINAGE INLET ITEM.

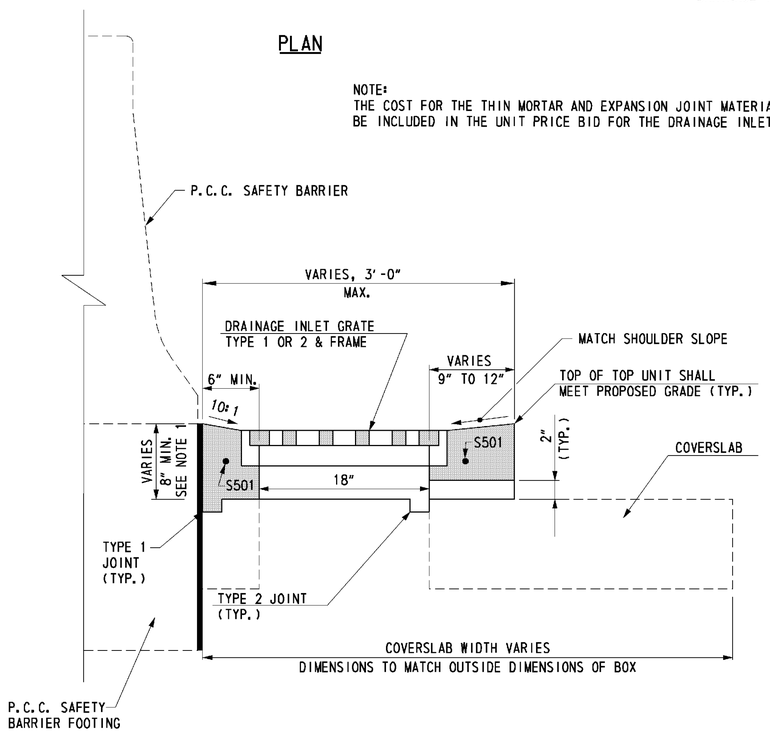

NOTES:

1. TOP UNIT HEIGHT TO BE 20" IN AREAS OF FULL-DEPTH PAVING, TO PREVENT REFLECTIVE CRACKING. IT IS INTENDED THAT THE TOP OF COVERSLAB BE FLUSH WITH THE BOTTOM OF THE LOWEST BITUMINOUS PAVEMENT LAYER. PROVIDE ADDITIONAL REINFORCING TO THE TOP UNIT AS DIRECTED BY THE ENGINEER. WHERE TOP UNIT PENETRATES A CONCRETE MOMENT SLAB; TOP UNIT TO BE AT LEAST 8" + M, WHERE M IS THE MOMENT SLAB THICKNESS, OR AS DIRECTED BY THE ENGINEER.
2. REFERENCE OFFSET AND ELEVATION FOR INLETS IS THE HYPOTHETICAL GUTTER FLOWLINE.
3. TOP UNIT TO BE INCLUDED IN UNIT PRICE BID FOR INLETS.
4. SEE STD. NO. D-5 FOR ADDITIONAL INFORMATION.
5. RELOCATE ENCROACHING COVERSLAB REINFORCING BARS TO ACCOMMODATE REDUCED DISTANCE BETWEEN FRAME AND BACK EDGE OF COVERSLAB.
6. COVERSLAB OPTIONAL FOR 34"x18" INLETS, SEE STD. D-5.

MODIFIED TYPE A TOP UNIT

DRAINAGE INLET DETAIL AT BARRIER

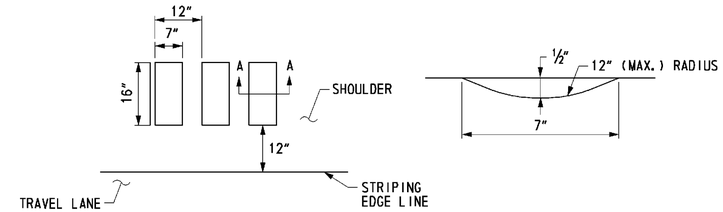

TYPICAL RUMBLE STRIP SPACING PLAN

SECTION A-A

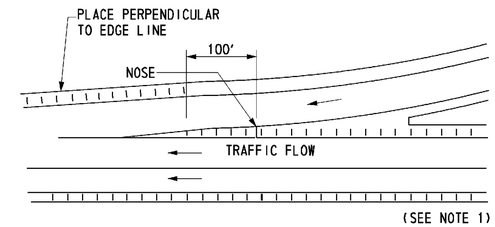

ENTRANCE TERMINALS

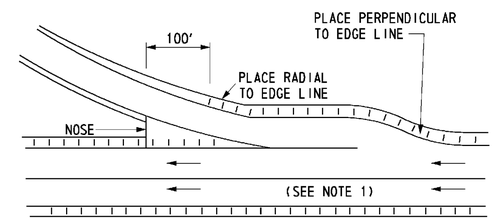

EXIT TERMINALS

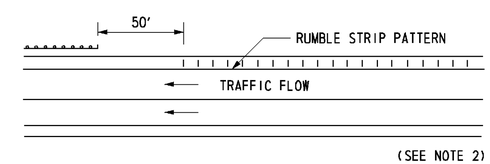

RUMBLE STRIPS IN ADVANCE OF CRITICAL LOCATIONS

NOTES:

1. AT ENTRANCE AND EXIT TERMINALS, THE OUTSIDE SHOULDER PATTERN SHOULD BE EXTENDED TOWARD THE RAMP JUNCTURE AS FAR AS POSSIBLE, AND THEN SHIFTED OVER TO THE OUTSIDE SHOULDER OF THE TERMINAL AREA. THE "NOSE" OF AN ENTRANCE OR EXIT TERMINAL IS A LOGICAL REFERENCE POINT. ON EITHER TERMINAL EXTEND THE PATTERN 100' INTO THE TERMINAL AREA AND THEN TRANSFER TO THE OUTSIDE SHOULDER.
2. RUMBLE STRIPS, WHEN USED IN ADVANCE OF CRITICAL LOCATIONS WITHOUT FULL WIDTH SHOULDERS, SUCH AS APPROACHES TO NARROW SHOULDERS AND AHEAD OF TRAFFIC BARRIER END TREATMENTS, SHOULD BE PLACED AS SHOWN.

RUMBLE STRIPS, HOT MIX (760504)

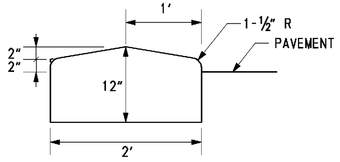

P.C.C. MONOLITHIC MEDIAN (701026)

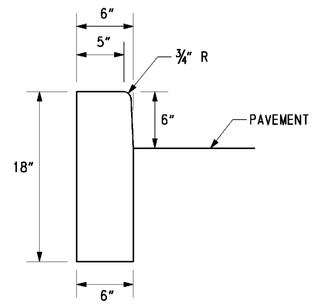

P.C.C. CURB, TYPE 1 MODIFIED (701027)

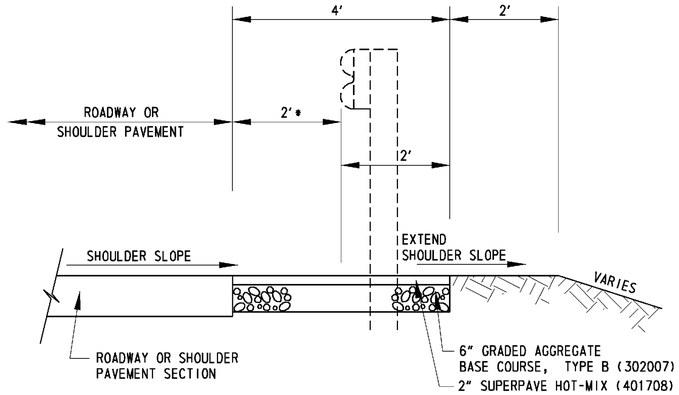

* DIMENSION TO SHOULDER SHALL BE 2' OR MATCH ADJACENT OFFSET.

NOTE:
GUARDRAIL CONSTRUCTION LOCATIONS ARE SHOWN ON THE PLAN SHEETS. MAINTENANCE PAVEMENT SHALL BE CONSTRUCTED WITH GUARDRAIL LOCATIONS WHERE NOTED ON THE PLANS.

MAINTENANCE PAVEMENT SECTION FOR SINGLE FACED GUARDRAIL

NOTE: BENCHING SHALL CONFORM TO THIS DETAIL AT ALL LOCATIONS WHERE EXISTING EMBANKMENTS ARE TO BE WIDENED AND THE PROPOSED SLOPE IS 4:1 OR GREATER. ALL COSTS ASSOCIATED WITH PROVIDING BENCHING SHALL BE INCIDENTAL TO ITEM 202000, EXCAVATION AND EMBANKMENT.

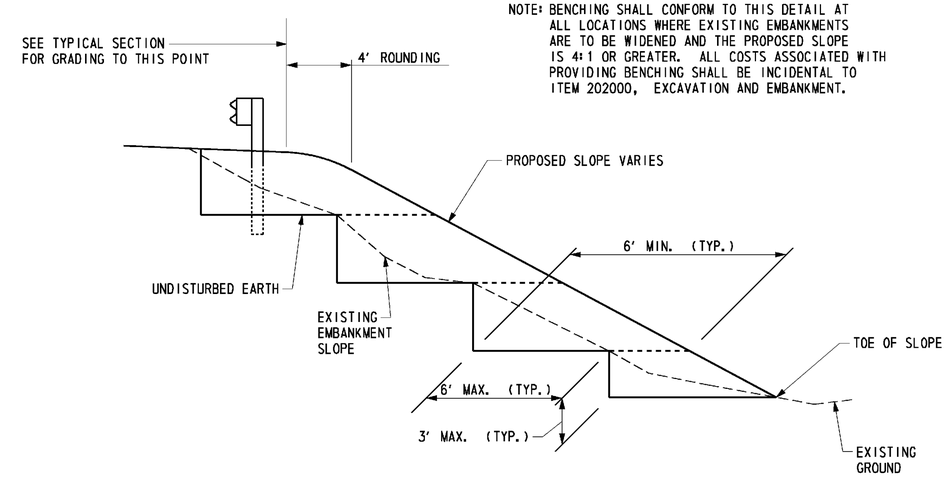

BENCHING DETAIL

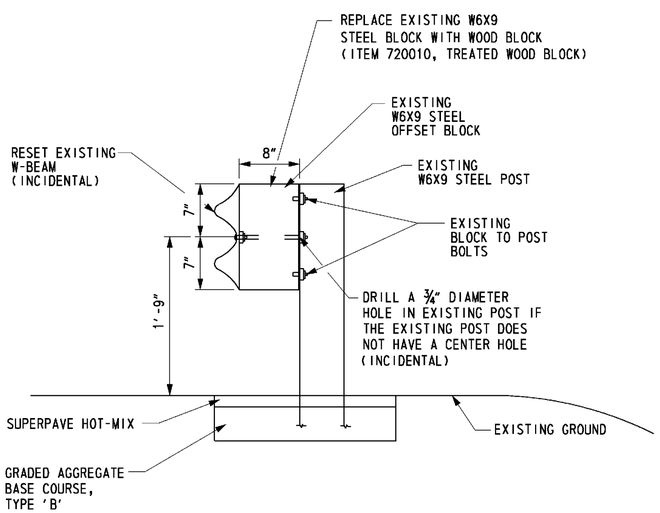

EXISTING GUARDRAIL WITHOUT CURB

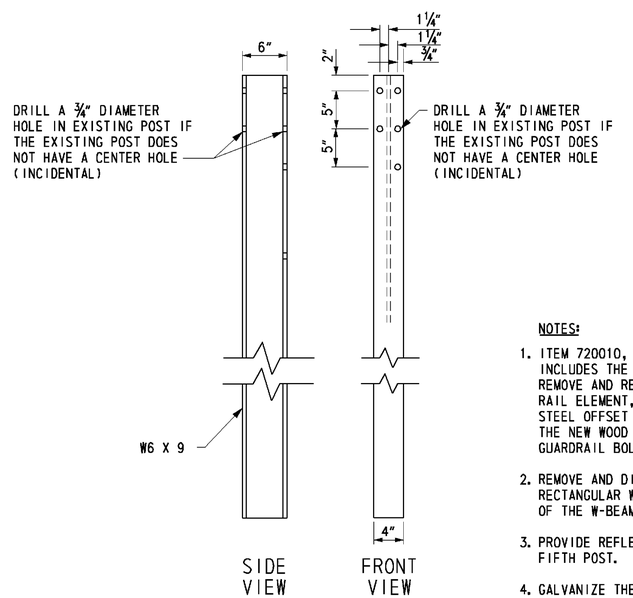

EXISTING STEEL POST

NOTES:

1. ITEM 720010, TREATED WOOD BLOCK INCLUDES THE WORK REQUIRED TO REMOVE AND RESET THE EXISTING RAIL ELEMENT, REMOVE THE EXISTING STEEL OFFSET BLOCK AND INSTALL THE NEW WOOD BLOCK WITH NEW GUARDRAIL BOLT AND RECESS NUT.
2. REMOVE AND DISPOSE OF EXISTING RECTANGULAR WASHERS ON THE FACE OF THE W-BEAM.
3. PROVIDE REFLECTORS AT EVERY FIFTH POST.
4. GALVANIZE THE STEEL AFTER DRILLING HOLES IN POSTS.

REPLACE STEEL OFFSET BLOCKS WITH WOOD BLOCKS

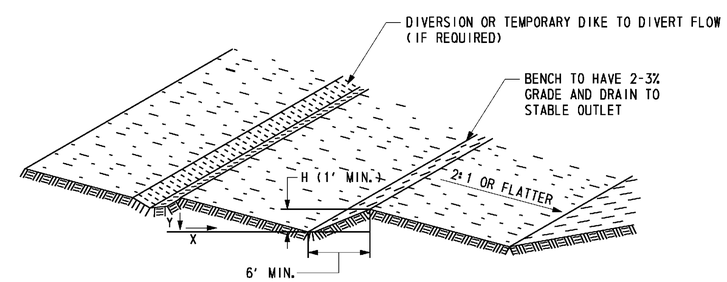

SLOPE X:1	Y (MAX.)
2	20'
3	30'
4	40'

DATA
SLOPE (X:1)
VERTICAL HEIGHT (Y)
BENCH HEIGHT (H)

SLOPE TREATMENT - BENCHING DETAIL

7/28/2010 10:21:31 AM
M:\PROJECTS\2003\03059_DELTRNPK\SR1MALL\CADD\3009004\PLANS\DT04_RAMPR.DGN

DELAWARE DEPARTMENT OF TRANSPORTATION	ADDENDUMS / REVISIONS	NOT TO SCALE	SR1/I-95 INTERCHANGE - CHRISTIANA MALL ROAD BRIDGE	CONTRACT T201009004 / COUNTY NEW CASTLE	BRIDGE NO. 1-223 / DESIGNED BY: SNT / CHECKED BY: CDW	CONSTRUCTION DETAILS	SHEET NO. 32 / TOTAL SHTS. 164

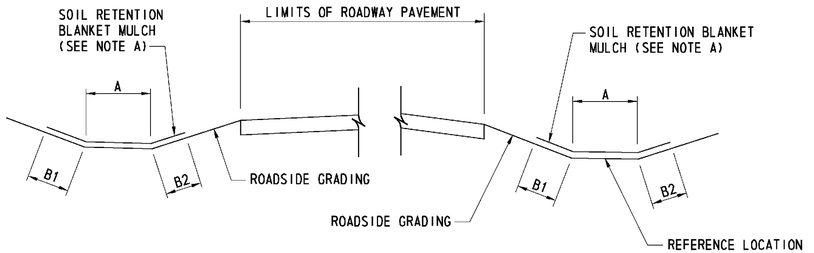

NOTE A:

SOIL RETENTION BLANKET MULCH, TYPE 5 (735535) OR TYPE 6 (735536), ACCORDING TO PLAN.

DITCH LINING DETAIL

FOR LONGITUDINAL DITCHES

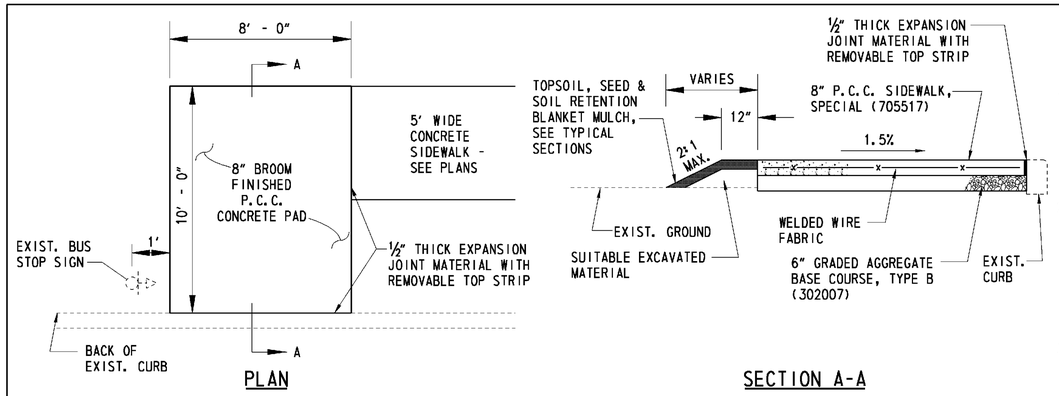

BUS STOP PAD NOTES:

1. AREA TO BE EXCAVATED WILL BE 12" WIDER THAN THE PAD ON THE LEFT, RIGHT, AND REAR SIDES, UNLESS OTHERWISE INDICATED ON THE CONSTRUCTION PLAN.
2. CONCRETE PAD SHALL BE 4000 PSI CONCRETE. CONCRETE SHALL BE REINFORCED WITH 6 x 6 - D6.5 x D6.5 WELDED WIRE FABRIC. WELDED WIRE FABRIC SHALL CONFORM TO ASTM A 496, AND BE CENTERED IN THE SLAB UNLESS OTHERWISE NOTED.
3. BUS STOP PAD TO BE MEASURED AND PAID FOR UNDER ITEM 705517, P.C.C. SIDEWALK, SPECIAL.

BUS STOP DETAIL

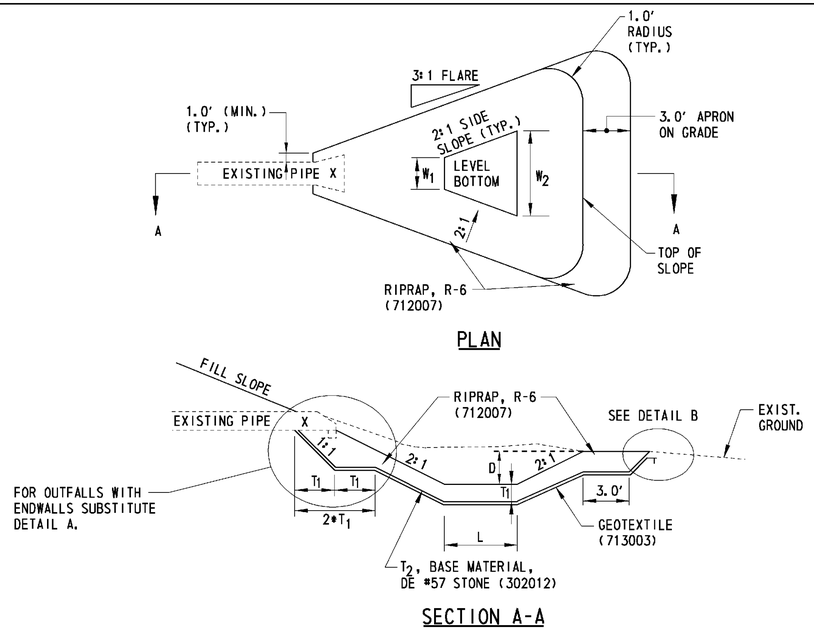

R-6 RIPRAP ENERGY DISSIPATOR: PIPE OUTFALLS

(SEE PLANS FOR PIPE SIZES)

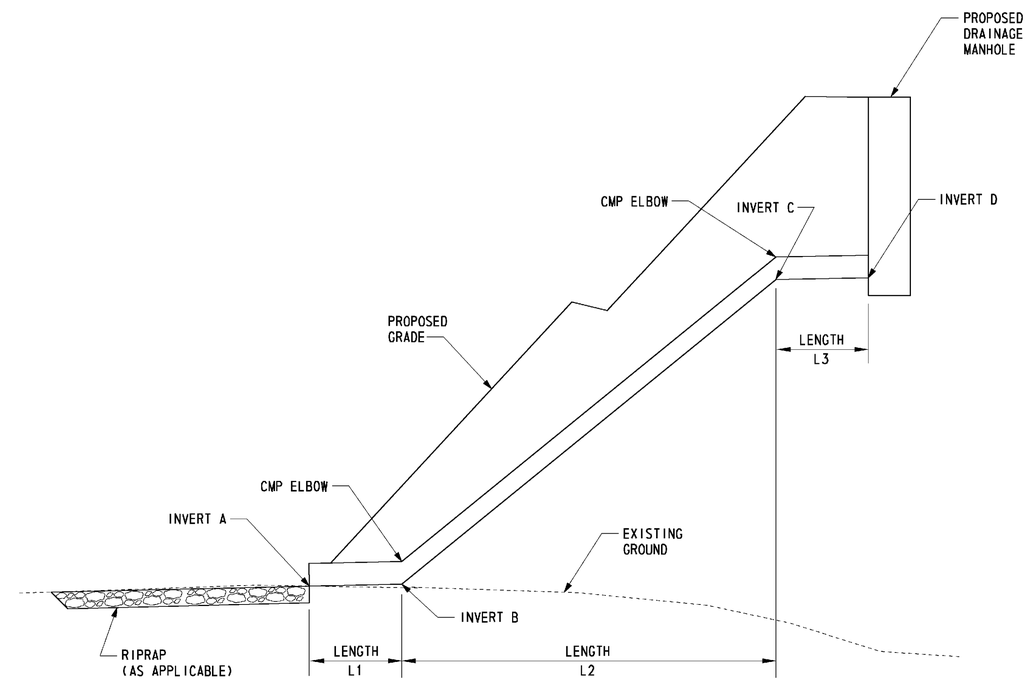

PIPE NO.	PIPE SIZE	PIPE TYPE	A	B	C	D	L1	L2	L3
P-55	18"	CMP - 16 GA.	51.00	51.05	58.45	58.50	5.00'	14.50'	5.00'
P-321	18"	CMP - 16 GA.	39.00	39.20	49.90	50.00	20.00'	58.60'	10.00'
P-376	18"	CMP - 16 GA	39.00	39.20	50.40	50.50	20.00'	57.80'	10.00'

STORM DRAIN DOWNSPOUT DETAIL

NOTE: THE COST OF THE CMP ELBOW SHALL BE INCIDENTAL TO THE UNIT PRICE BID FOR ITEM 614003, GALVANIZED CORRUGATED STEEL PIPE, 18", 16 GAGE.

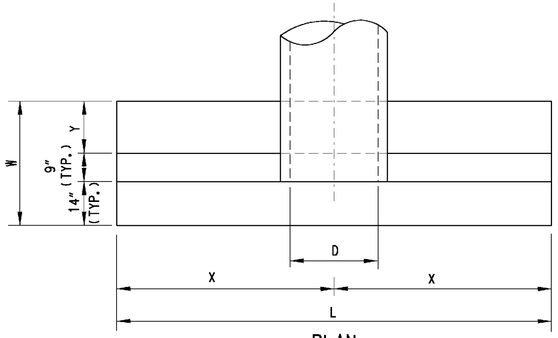

PLAN

STRUCTURE NO.	C	D	H	X	L	Y	W
HW-515	12"	36"	4'-0"	8'-4"	16'-8"	1'-9"	3'-8"
HW-520	12"	30"	3'-6"	7'-1"	14'-2"	1'-6"	3'-5"

NOTE:
HEADWALLS SHALL BE PLACED ON A MINIMUM 6" OF NO. 57 STONE (302012) PROVIDING BEARING STRENGTH OF 2000 PSF TO BE VERIFIED BY CONTRACTOR.

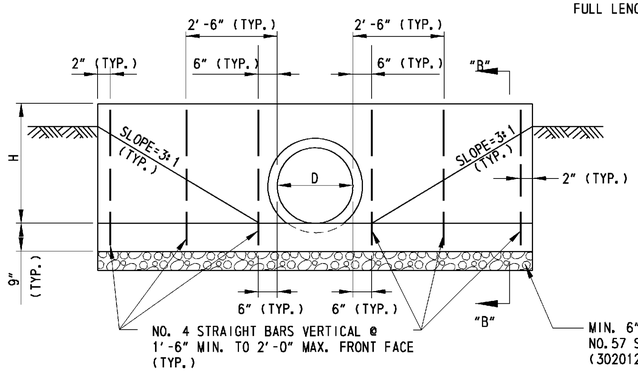

ELEVATION

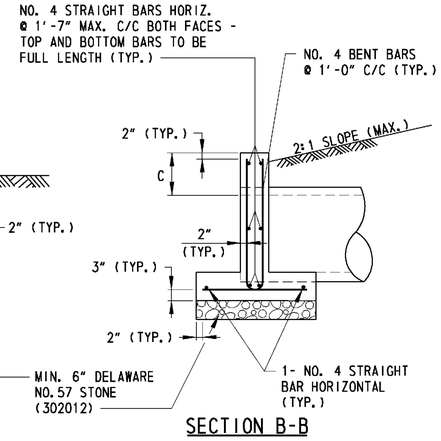

SECTION B-B

HEADWALL (617515)

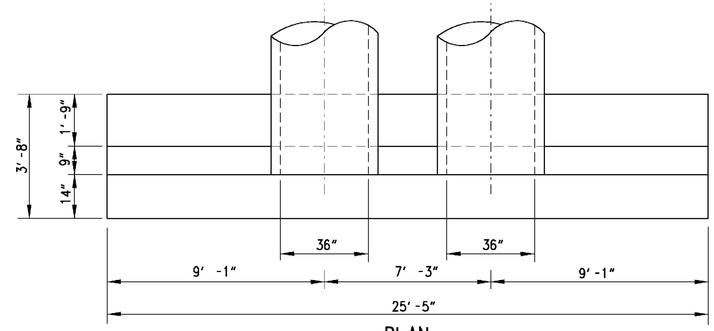

PLAN

NOTE:
CONCRETE WALL SHALL BE PLACED ON A MINIMUM 6" OF NO. 57 STONE (302012) PROVIDING BEARING STRENGTH OF 2000 PSF TO BE VERIFIED BY CONTRACTOR.

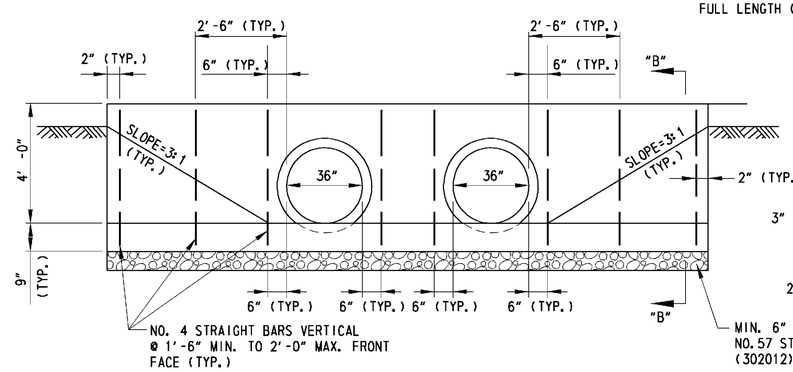

ELEVATION

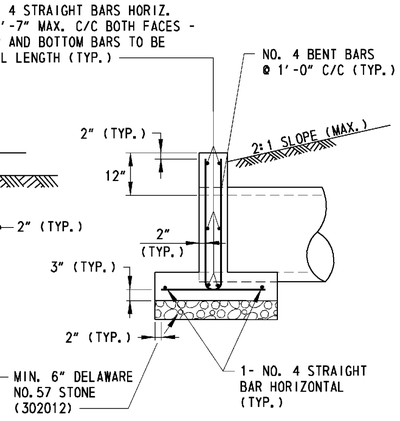

SECTION B-B

HW-522 REINFORCED CONCRETE WALL (602512)

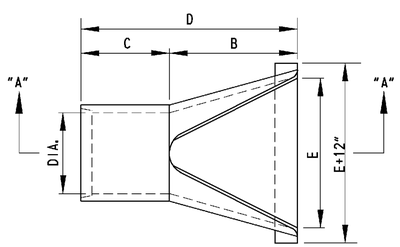

PLAN

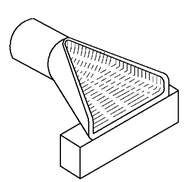

ISOMETRIC VIEW

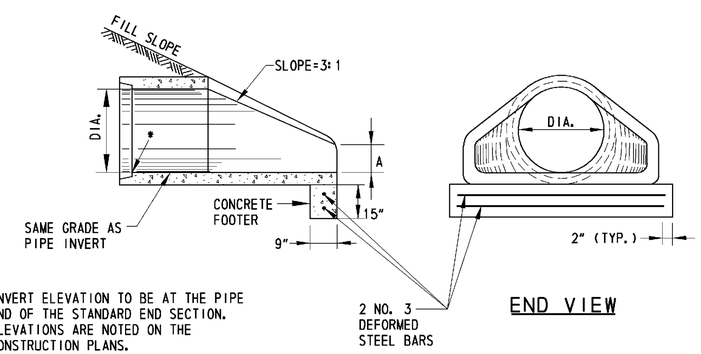

* INVERT ELEVATION TO BE AT THE PIPE END OF THE STANDARD END SECTION. ELEVATIONS ARE NOTED ON THE CONSTRUCTION PLANS.

SECTION A-A

END VIEW

DIAMETER	A	B	C	D	E
12"	4"	2'-0"	4'-0⅞"	6'-0⅞"	2'-0"
15"	6"	2'-3"	3'-10"	6'-1"	2'-6"
18"	9"	2'-3"	3'-10"	6'-1"	3'-0"
24"	9½"	3'-7½"	2'-6"	6'-1½"	4'-0"
30"	1'-0"	4'-6"	1'-7¾"	6'-1¾"	5'-0"
36"	1'-3"	5'-3"	2'-10¾"	8'-1¾"	6'-0"
42"	1'-9"	5'-3"	2'-11"	8'-2"	6'-6"
48"	2'-0"	6'-0"	2'-2"	8'-2"	7'-0"

CONCRETE FLARED END SECTION

9/8/2010 4:20:39 PM
M:\PROJECTS\2003\03059_DELTRNPK\SRIMALL\CADD\3009004\PLANS\DT07_RAMPR1.DGN

DELAWARE DEPARTMENT OF TRANSPORTATION	ADDENDUMS / REVISIONS	NOT TO SCALE	SR1/I-95 INTERCHANGE - CHRISTIANA MALL ROAD BRIDGE	CONTRACT T201009004	BRIDGE NO. 1-223	CONSTRUCTION DETAILS	SHEET NO. 34
				COUNTY NEW CASTLE	DESIGNED BY: AJP		TOTAL SHTS. 164
					CHECKED BY: REP		

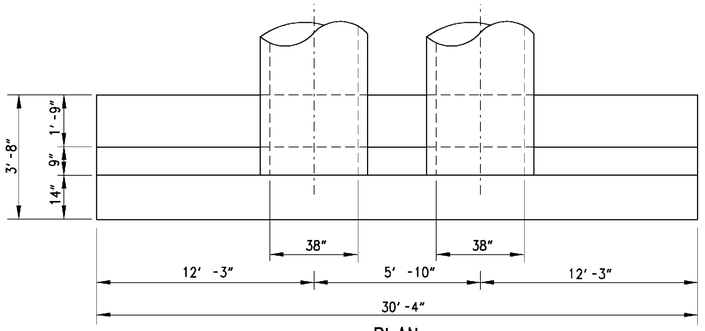

PLAN

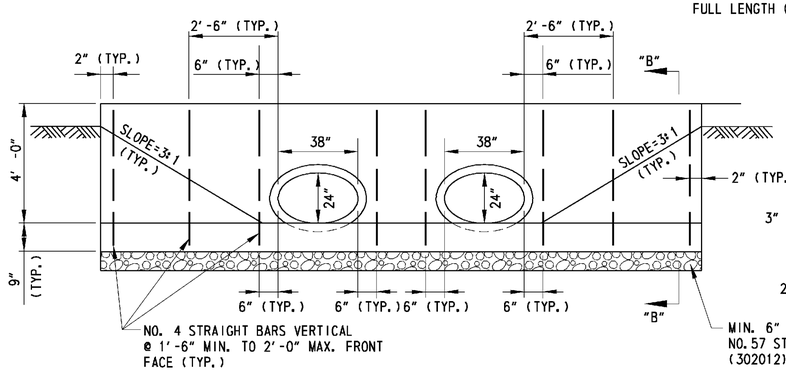

ELEVATION

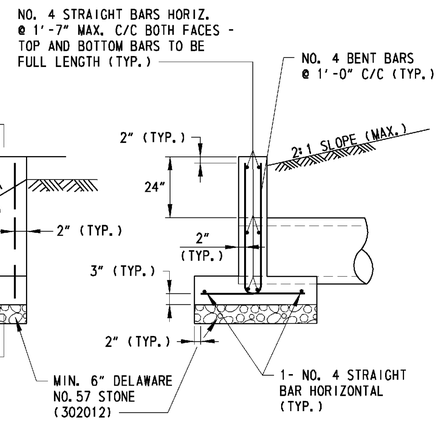

SECTION B-B

NOTES:
1. THE COST OF THE HEADWALL SHALL BE INCLUDED IN THE UNIT PRICE BID FOR ITEM 272003, POND OUTLET STRUCTURE, CONCRETE, #4.
2. CONCRETE WALL SHALL BE PLACED ON A MINIMUM 6" OF NO. 57 STONE (302012) PROVIDING BEARING STRENGTH OF 2000 PSF TO BE VERIFIED BY CONTRACTOR.

HW-521 DETAIL

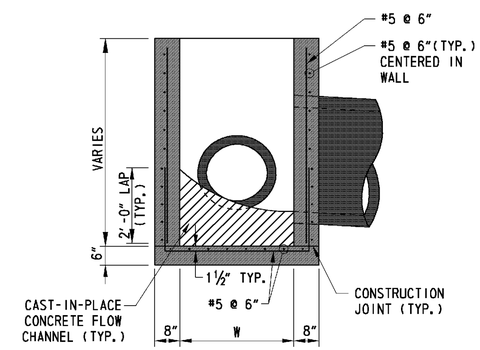

SECTION A-A

STRUCTURE NO.	ITEM NO.	L	W
DI-375	708512	34"	24"
MH-376	708582	48"	30"
MH-510	708596	66"	66"

NOTES:
1. COVER SLAB SHALL FOLLOW DELDOT STANDARD CONSTRUCTION DETAIL D-5 AND MATCH OUTSIDE TO OUTSIDE DIMENSIONS OF SPECIAL DRAINAGE STRUCTURE. TYPE 3 JOINT DETAIL SHALL BE MODIFIED TO MATCH SPECIAL DRAINAGE STRUCTURE WALL THICKNESS.
2. OTHER DRAINAGE INLET STRUCTURAL COMPONENTS NOT INCLUDED SHALL FOLLOW DELDOT STANDARD CONSTRUCTION DETAILS D-4 AND D-5.
3. OTHER MANHOLE STRUCTURAL COMPONENTS NOT INCLUDED SHALL FOLLOW DELDOT STANDARD CONSTRUCTION DETAILS D-4 AND D-6.
4. REFER TO DRAINAGE INLET SCHEDULE ON DRAINAGE PLANS FOR TOP UNIT TYPE.

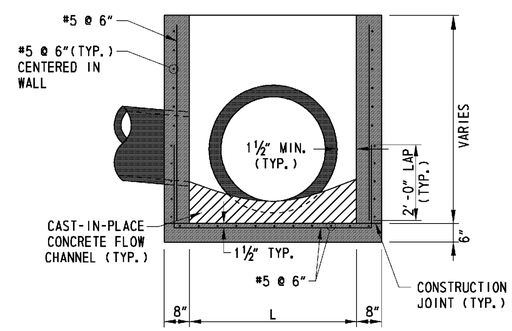

SECTION B-B

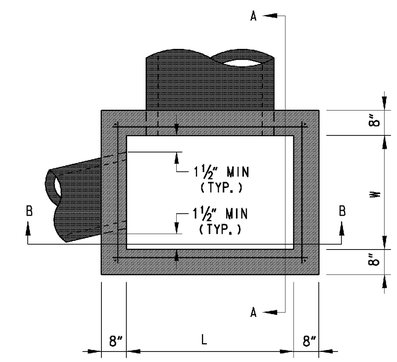

PLAN

SPECIAL DRAINAGE STRUCTURES

9/20/2010 10:50:25 AM
M:\PROJECTS\2003\03059_DEL TRNPK\SRIMALL\CADD\3009004\PLANS\DT09_RAMPR1.DGN

DELAWARE DEPARTMENT OF TRANSPORTATION	ADDENDUMS / REVISIONS	NOT TO SCALE	SR1/I-95 INTERCHANGE - CHRISTIANA MALL ROAD BRIDGE	CONTRACT T201009004	BRIDGE NO. 1-223	CONSTRUCTION DETAILS	SHEET NO. 35
				COUNTY NEW CASTLE	DESIGNED BY: AJP		TOTAL SHTS.
					CHECKED BY: REP		164

EQUALITY STATIONS
STA. 100+00.00 RAMP R1= STA. 31+49.98 MALL RING ROAD
STA. 101+43.65 RAMP R1= STA. 745+11.94 RAMP U
STA. 101+68.09 RAMP R1= STA. 620+38.04 SR7 (NB)
STA. 102+12.90 RAMP R1= STA. 420+25.25 RAMP B
STA. 102+43.67 RAMP R1= STA. 1265+19.56 RAMP A
STA. 102+88.61 RAMP R1= STA. 1626+49.22 SR7 (SB)
STA. 103+13.12 RAMP R1= STA. 1510+52.05 RAMP R

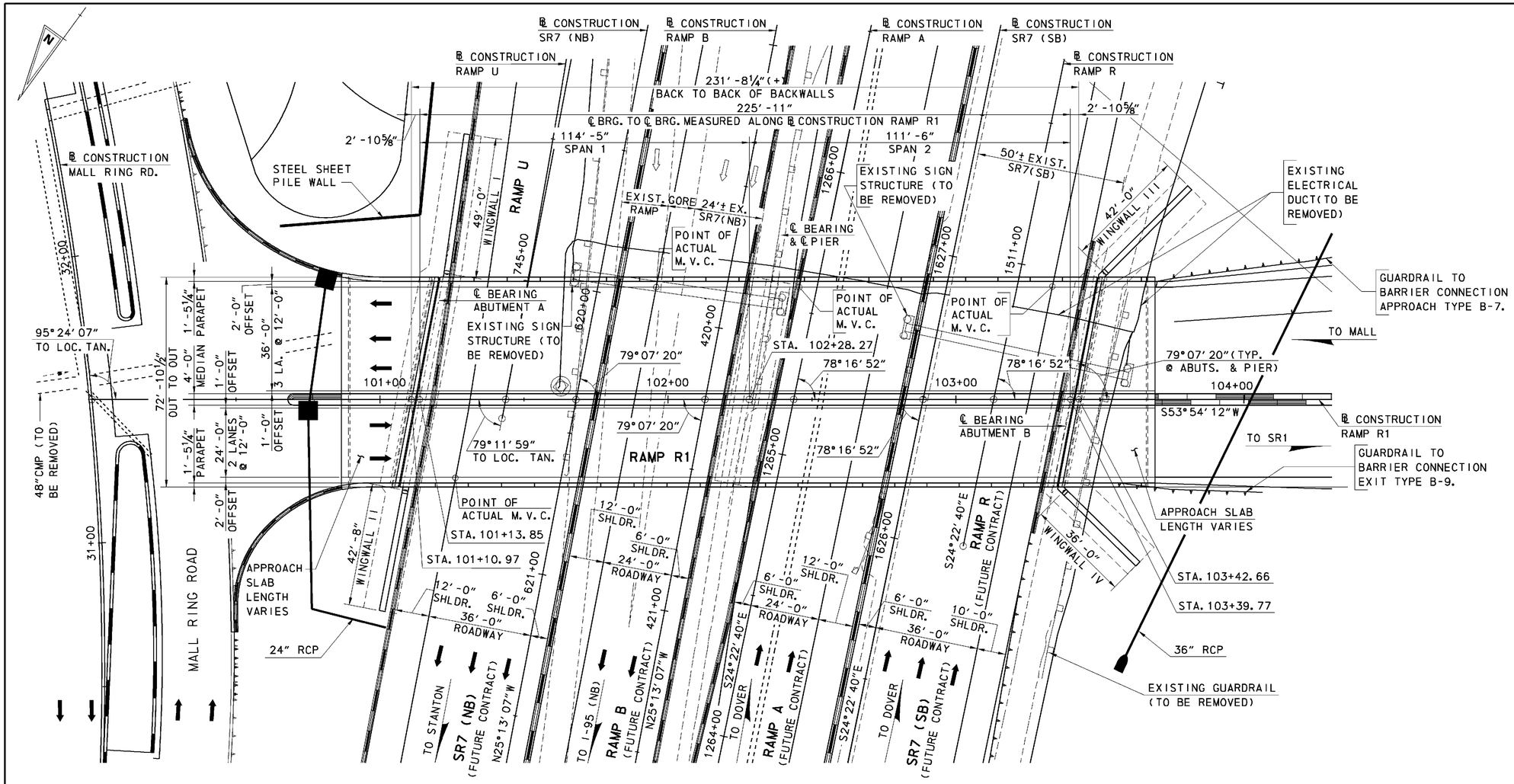

PLAN

SCALE: 1″=20′

CROSS REFERENCE NOTES:

1. FOR GENERAL NOTES AND PROFILES, SEE SHEET S7-2.
2. FOR STEEL SHEET PILE WALL, SEE POND A WALL SHEET.

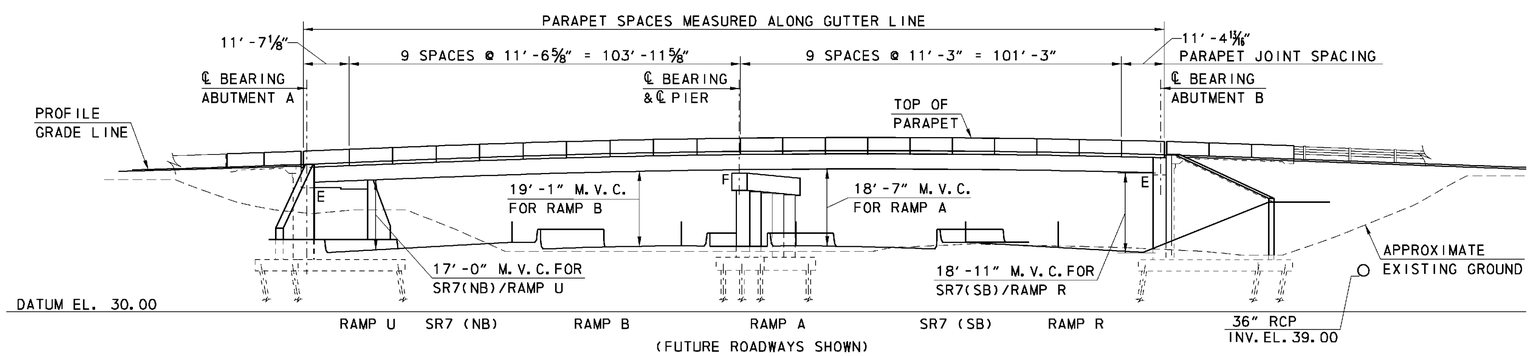

ELEVATION

SCALE: 1″=20′

0 10 20 30 50

SCALE: 1″=20′

9/29/2010 6:58:27 AM
M:\PROJECTS\2003\03059_DELTRNPK\SRIMALL\CADD\3009004\PLANS\PE01_BR-S7_RAMPR1.DGN

DELAWARE DEPARTMENT OF TRANSPORTATION	ADDENDUMS / REVISIONS	SR1/I-95 INTERCHANGE - CHRISTIANA MALL ROAD BRIDGE	CONTRACT T201009004	BRIDGE NO. 1-223	RAMP R1 OVER SR7 GENERAL PLAN AND ELEVATION	S7-1
			COUNTY NEW CASTLE	DESIGNED BY: JMS		SHEET NO. 36
				CHECKED BY: JSW		TOTAL SHTS. 164

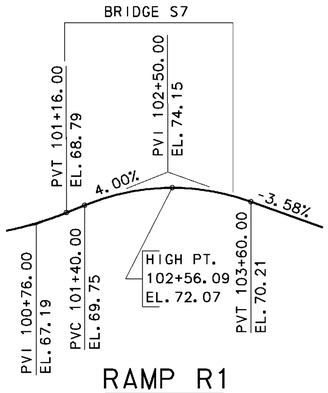

RAMP R1

VERTICAL CURVE DATA
NO SCALE

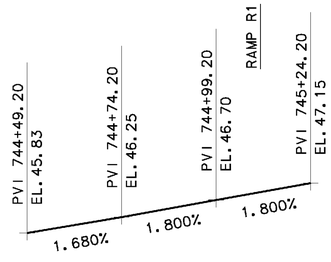

RAMP U

VERTICAL CURVE DATA
NO SCALE

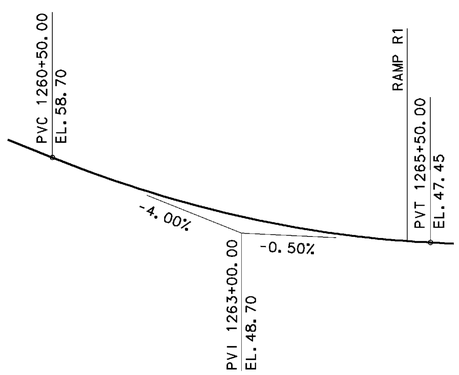

RAMP A

VERTICAL CURVE DATA
NO SCALE

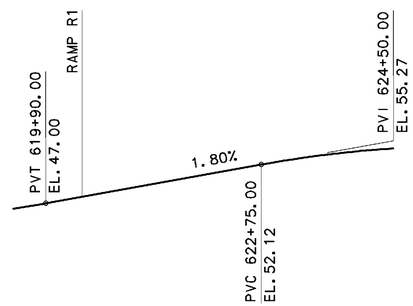

SR7 (NB)

VERTICAL CURVE DATA
NO SCALE

MATCH EXISTING

SR7 (SB) & RAMP R

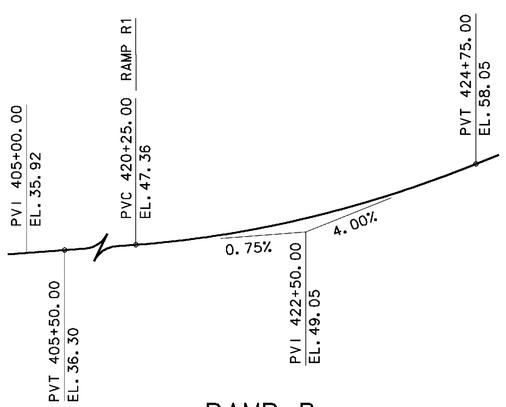

RAMP B

VERTICAL CURVE DATA
NO SCALE

BRIDGE LEGAL LOAD RATING (TONS)
RAMP R1 OVER SR7

TRUCK TYPE	RATING FACTOR	SAFE LOAD CAPACITY
HS-20	2.34	84.2
S220	3.85	77.0
S327	2.93	79.1
S335	2.23	78.1
S437	2.20	80.3
T330	2.91	87.3
T435	2.55	89.3
T540	2.29	91.6

BRIDGE DESIGN LOAD RATING:
INVENTORY = 1.14
OPERATING = 1.58

LOAD RATINGS ARE PER THE LOAD AND RESISTANCE FACTOR RATING (LRFR) METHOD (AASHTO MANUAL FOR BRIDGE EVALUATION, FIRST EDITION, 2008)

GENERAL NOTES:

1. DESIGN SPECIFICATIONS
AASHTO LRFD BRIDGE DESIGN SPECIFICATIONS 4TH EDITION WITH 2009 INTERIM REVSIONS.
DELAWARE DEPARTMENT OF TRANSPORTATION BRIDGE DESIGN MANUAL, MAY 2005 INCLUDING LATEST REVSIONS, ANSI/AASHTO/AWS D1.5 BRIDGE WELDING CODE.

2. LOADING
UNIT WEIGHTS OF MATERIALS SHALL BE IN ACCORDANCE WITH THE DELAWARE DESIGN MANUAL.
FUTURE OVERLAY ALLOWANCE SHALL BE 25 LBS/SQ FT.
STEEL BRIDGE DECK FORMS WHICH STAY IN PLACE (INCLUDING CONCRETE IN FORM CORRUGATIONS) SHALL BE 15 LBS/SQ FT.
VEHICLE LIVE LOAD SHALL BE HL-93, WHICH CONSISTS OF A DESIGN TRUCK OR TANDEM WITH DYNAMIC LOAD ALLOWANCE AND A LANE LOAD. RATING SHALL USE ALL DELAWARE LEGAL LOADS SPECIFIED IN THE BRIDGE DESIGN MANUAL.
BARRIER SHALL BE DESIGNED FOR TEST LEVEL FIVE (TL-5).
FATIGUE DESIGN SHALL BE BASED ON THE FOLLOWING ONE DIRECTIONAL TRAFFIC VOLUMES:

RAMP R1 OVER SR7: DESIGN ADT = 11,000, DESIGN ADTT = 550.

FOR THERMAL LOADS, CONSIDER THE MODERATE TEMPERATURE RANGE AS STIPULATED IN THE AASHTO LRFD DESIGN SPECIFICATIONS. THE NORMAL TEMPERATURE SHALL BE CONSIDERED TO BE 60F.
FOR SEISMIC LOADS, CONSIDER SEISMIC PERFORMANCE ZONE 1, WITH A SITE CLASS = E AND IMPORTANCE CATEGORY = ESSENTIAL.

3. PORTLAND CEMENT CONCRETE
PORTLAND CEMENT CONCRETE FOR CAST-IN-PLACE ELEMENTS SHALL BE AS FOLLOWS:
(28 DAY COMPRESSIVE STRENGTH)
ITEM NO. 602015 (CLASS A, F'C=4500 PSI) - ABUTMENT STEM AND BACKWALL
ITEM NO. 602004 (CLASS B, F'C=3000 PSI) - ABUTMENT FOOTING
ITEM NO. 602006 (CLASS B, F'C=3000 PSI) - PIER FOOTING
ITEM NO. 602007 (CLASS A, F'C=4500 PSI) - PIER ABOVE FOOTING
ITEM NO. 602013 (CLASS D, F'C=4500 PSI) - DECK
ITEM NO. 602014 (CLASS D, F'C=4500 PSI) - APPROACH SLAB
ITEM NO. 602017 (CLASS A, F'C=4500 PSI) - BARRIER
MIX REQUIREMENTS SHALL CONFORM TO SECTION 812 OF THE DELAWARE DEPARTMENT OF TRANSPORTATION STANDARD SPECIFICATIONS. ALL CONCRETE EDGES, INCLUDING OUTSIDE FACE OF PARAPET AND CONSTRUCTION JOINTS, SHALL BE CHAMFERED WITH ¾"x¾" MILLED CHAMFER STRIPS UNLESS NOTED OTHERWISE, EXCEPT ON UNEXPOSED FOOTINGS, DECK POURS, OR WHERE INDICATED BY THE NOTATION ON THE PLANS, "DO NOT CHAMFER". NO SLIP-FORMING OF BARRIERS IS PERMITTED UNLESS APPROVED.

4. BAR REINFORCEMENT
REINFORCING STEEL SHALL CONFORM TO AASHTO M31 (ASTM A615), GRADE 60. ALL REINFORCING STEEL SHALL HAVE A CLEAR COVER OF 2" UNLESS OTHERWISE SPECIFIED ON THE PLANS. EPOXY COATED REINFORCING STEEL SHALL CONFORM TO AASHTO M284 (ASTM D3963), AND IS DENOTED WITH A SUFFIX "E" IN THE BAR MARKS. EPOXY COATED REINFORCING STEEL SHALL BE USED IN ALL LOCATIONS EXCEPT FOOTINGS. DOWEL BARS SHALL BE EPOXY COATED.

DO NOT WELD GRADE 60 REINFORCING STEEL.

5. STRUCTURAL STEEL
STRUCTURAL STEEL SHALL CONFORM TO ASTM A709, GRADE 50W, INCLUDING THE ADDITIONAL REQUIREMENTS FOR CHARPY V-NOTCH TESTING OF AASHTO M270 FOR TENSILE STRESS SUSTAINING PRIMARY LOAD CARRYING MEMBERS, INCLUDING THE CONNECTIONS. THE PRIMARY LOAD CARRYING COMPONENTS ARE THE FLANGES, WEBS AND SPLICE PLATES OF THE STEEL GIRDERS.
THE USE OF FRACTURE CRITICAL MEMBERS IS PROHIBITED. FATIGUE CATEGORIES D, E AND F SHALL NOT BE USED IN STRESS REVERSAL OR TENSION AREAS, EXCEPT FOR TEMPORARY CONDITIONS. SIX (6) FEET AT THE ENDS OF EACH GIRDER AND THE END CROSS FRAMES SHALL BE PAINTED WITH A URETHANE PAINT SYSTEM IN ACCORDANCE WITH SPECIAL PROVISION #605537 URETHANE PAINT SYSTEM. THE FINAL COLOR SHALL BE FEDERAL #10076 (BROWN) OF FED-STD-595B. COST OF PAINTING SHALL BE INCIDENTAL TO ITEM 605002 STEEL STRUCTURES.

ALL BOLTS SHALL CONFORM TO ASTM A325, WITH THREADS EXCLUDED FROM SHEAR PLANES. BOLTED CONNECTIONS SHALL BE CLASS B SLIP CRITICAL CONNECTIONS, UNLESS NOTED ON THE PLANS.

6. SERVICEABILITY
LIVE LOAD DEFLECTION SHALL BE LIMITED TO L/800.
FOR REINFORCEMENT DISTRIBUTION REQUIREMENTS, CONSIDER CLASS 2 EXPOSURE CRITERIA FOR DECKS. ACCOMODATION TO JACK GIRDERS FOR FUTURE BEARING REPLACEMENT HAS BEEN CONSIDERED IN THE DESIGN.

7. CONSTRUCTION JOINTS
KEYED CONSTRUCTION JOINTS SHALL BE 2"x4" OR AS NOTED. ALL EXPOSED CONSTRUCTION JOINT EDGES SHALL HAVE A ¾" V-NOTCH.

8. STABILIZING STRUCTURAL EXCAVATIONS
SHORING SHALL BE REQUIRED FOR ANY EXCAVATION EXCEEDING FIVE (5) FEET IN HEIGHT, THE COST OF SHORING SHALL BE INCIDENTAL TO ITEM NO. 207000 EXCAVATION AND BACKFILL FOR STRUCTURES. IN LIEU OF SHORING, THE CONTRACTOR MAY USE A 2:1 CUT SLOPE. NO PAYMENT SHALL BE MADE FOR ADDITIONAL EXCAVATION OR FILL OUTSIDE THE LIMITS AS DEFINED IN SECTION 207 OF THE STANDARD SPECIFICATIONS.

9. STRUCTURAL BACKFILL SHALL CONFORM TO THE REQUIREMENTS OF BORROW TYPE C.

10. ROADWAY CLEARANCES
A MINIMUM OF 16'-6" VERTICAL CLEARANCE SHALL BE MAINTAINED ABOVE ALL ROADWAYS.
A MINUMUM OF 2'-0" HORIZONTAL CLEARANCE SHLL BE MAINTAINED FROM THE OUTSIDE EDGE OF SHOULDER OFFSET (FACE OF CURB) TO THE FACE OF ANY OBSTRUCTION.

11. WATERPROOFING MEMBRANE
APPLY WATERPROOFING MEMBRANE WITH ASPHALTIC MATERIALS, PRIMERS, AND FABRIC. DO NOT APPLY MEMBRANE UNTIL CONCRETE CURING IS COMPLETE AND SURFACES ARE PROTECTED FROM THE COLD. ENSURE THAT ALL SURFACES ARE DRY, SMOOTH, AND FREE FROM PROJECTIONS AND HOLES.

COAT THE CURED, CLEANED, AND DRY SURFACES WITH A PRIME COAT. COVER WITH MOP COATS AND LAYERS OF FABRIC. COAT WITH A PRIMER AT A RATE OF ⅛ GAL/SY. APPLY THE PRIME COAT 24 HOURS IN ADVANCE OF APPLYING ANY MOP COATS AND ENSURE THAT IT IS DRY BEFORE APPLYING THE FIRST MOPPING. DO NOT HEAT THE PRIMER. IN ALL CASES, ENSURE THAT THE MOPPING ON CONCRETE COVERS THE SURFACE SO THAT NO GRAY SPOTS ARE VISIBLE, AND ON CLOTH IS SUFFICIENTLY HEAVY TO CONCEAL THE WEAVE. APPLY ASPHALT AT A RATE OF 1.4 GAL/SY ON VERTICAL SURFACES.

AN ALTERNATE SYSTEM OF WATERPROOFING CONSISTING OF ROLLS OR SHEETS OF MEMBRANE MATERIAL MAY BE USED IN LIEU OF THE ABOVE COATINGS. APPLY THE ROLLS OR SHEETS ACCORDING TO THE MANUFACTURER'S RECOMMENDATIONS.

WATERPROOFING MEMBRANE WILL NOT BE MEASURED BUT THE COST WILL BE INCIDENTAL TO ITEM 602015.

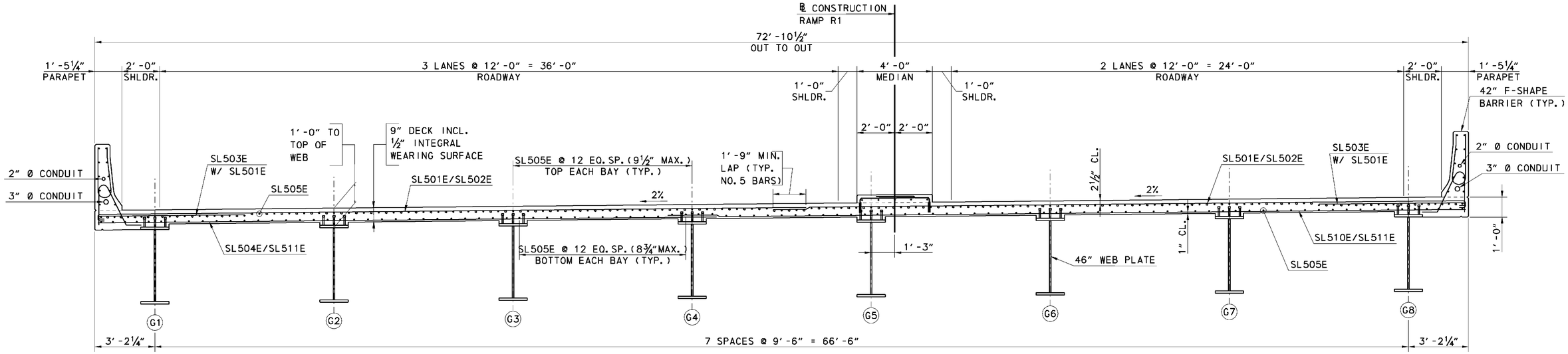

TYPICAL SECTION

SCALE: ⅜"=1'-0"

PILE INSTALLATION NOTES:

1. ALL PILES SHALL BE HP14x89 AASHTO M270 (ASTM A 709), GRADE 50. PILES SHALL NOT BE COATED OR CASED.

2. ALL PILES SHALL BE DRIVEN TO THE NOMINAL PILE DRIVING RESISTANCE (Rndr) LISTED IN THE PILE INSTALLATION DATA TABLE.

3. THE CONTRACTOR SHALL BE RESPONSIBLE FOR SUBMITTING A WAVE EQUATION ANALYSIS AND ALL OTHER INCIDENTALS IN ACCORDANCE WITH THE PROJECT SPECIFICATIONS. THE WAVE EQUATION AND HIGH-STRAIN DYNAMIC PILE TESTING MUST BE SIGNED AND STAMPED BY A PROFESSIONAL ENGINEER LICENSED IN THE STATE OF DELAWARE IN ACCORDANCE WITH THE PROJECT SPECIFICATIONS.

4. UPON COMPLETION OF THE HIGH-STRAIN DYNAMIC PILE TESTING THE CONTRACTOR SHALL SUBMIT A CAPWAP ANALYSIS OR OTHER SIMILAR APPROVED SIGNAL MATCHING TECHNIQUE TO THE ENGINEER FOR REVIEW AND APPROVAL IN ACCORDANCE WITH THE PROJECT SPECIFICATIONS.

5. PILE LENGTHS FOR ORDERING PURPOSES SHALL BE DETERMINED BY TEST PILES. A MINIMUM OF ONE (1) PILE PER SUBSTRUCTURE, AS SHOWN ON THE PLANS, SHALL BE DYNAMICALLY TESTED BY THE CONTRACTOR IN ACCORDANCE WITH SPECIAL PROVISION 619519. TEST AND PRODUCTION PILE RE-STRIKES WILL BE PAID AS FOLLOWS:
   a). ALL TEST PILE(S) WILL BE RESTRUCK AND DYNAMICALLY TESTED BY THE CONTRACTOR. THE TEST PILE RESTRIKES SHALL BE INCIDENTAL TO ITEM NO. 619519 DYNAMIC PILE TESTING BY CONTRACTOR PROVIDED THAT THEY ARE PERFORMED WITHIN FIVE (5) CALENDAR DAYS FROM INITIAL DRIVE.
   b). AN ADDITIONAL PAYMENT WILL BE MADE TO THE CONTRACTOR IF HE IS DIRECTED BY THE ENGINEER TO WAIT AND RESTRIKE THE TEST PILE MORE THAN FIVE (5) CALENDAR DAYS AFTER INITIAL DRIVE. THE CONTRACTOR SHALL BE COMPENSATED AT THE FIXED PRICE OF $1,000.00 PER CALENDAR DAY FOR EVERY DAY AFTER THE FIFTH CALENDAR DAY, UNDER ITEM NO. 619502 TEST PILE RESTRIKE. MULTIPLE TEST PILE RESTRIKES OCCURRING ON THE SAME DAY WILL ONLY BE PAID FOR AS ONE CALENDAR DAY. NO ADDITIONAL COMPENSATION WILL BE MADE REGARDLESS OF THE NUMBER OF TEST PILE RESTRIKES PERFORMED THAT DAY.
   c). RESTRIKES ON PRODUCTION PILES WHICH ARE DESIGNATED TO BE DYNAMICALLY TESTED WILL NOT BE PAID UNDER ITEM NO. 619501 PRODUCTION PILE RESTRIKE. THESE PRODUCTION PILE RESTRIKES ARE INCIDENTAL TO ITEM NO. 619519 DYNAMIC PILE TESTING BY CONTRACTOR.
   d). THE FIRST TEN (10) PRODUCTION PILE RESTRIKES FOR THE MALL BRIDGE SHALL BE PERFORMED AT NO COST TO THE DEPARTMENT. SUBSEQUENT RESTRIKES SHALL BE UNDER ITEM NO. 619501 PRODUCTION PILE RESTRIKES AT THE FIXED PRICE OF $500.00 EACH.

THE DEPARTMENT RESERVES THE RIGHT TO PERFORM DYNAMIC TESTING OF RESTRIKES.

PILE INSTALLATION DATA

	DESIGN DATA			ACTUAL FIELD DATA	
SUBSTRUCTURE UNIT	NOMINAL PILE DRIVING RESISTANCE (Rndr)(KIPS)	ESTIMATED TIP ELEVATION	MINIMAL TIP ELEVATION	AVERAGE ACTUAL MINIMUM TIP ELEVATION	AVERAGE ACTUAL MAXIUM TIP ELEVATION
ABUTMENT A	420	-24	-19		
PIER	420	1.5	6.5		
ABUTMENT B	395	-4	1		

ABUTMENT A PILE DRIVING INFORMATION

PILE SIZE AND TYPE: HP14x89
ACTUAL BEARING OBTAINED:
HAMMER TYPE:
PILE HAMMER ENERGY:
SPECIAL DRIVING CONDITIONS AND COMMENTS:

PIER PILE DRIVING INFORMATION

PILE SIZE AND TYPE: HP14x89
ACTUAL BEARING OBTAINED:
HAMMER TYPE:
PILE HAMMER ENERGY:
SPECIAL DRIVING CONDITIONS AND COMMENTS:

ABUTMENT B PILE DRIVING INFORMATION

PILE SIZE AND TYPE: HP14x89
ACTUAL BEARING OBTAINED:
HAMMER TYPE:
PILE HAMMER ENERGY:
SPECIAL DRIVING CONDITIONS AND COMMENTS:

CROSS REFERENCE NOTES:
1. FOR GIRDER DETAILS SEE SHEET S7-27.
2. FOR CROSS FRAME DETAILS, SEE SHEET S7-28.
3. FOR DECK SLAB PLAN, SEE SHEET S7-30.
4. FOR STAY-IN-PLACE FORM AND SHEAR STUD DETAILS, SEE SHEET S7-31.
5. FOR EXPANSION JOINT AND DIAPHRAGM DETAILS, SEE SHEET S7-33.
6. FOR F-SHAPE BARRIER AND MEDIAN DETAILS, SEE SHEET S7-31.

0 2 4 8
SCALE: ⅜"=1'-0"

WORKING POINT LOCATION CHART				
WORKING POINT	STATION	OFFSET	NORTHING	EASTING
W.P. 1	101+01.72	73'-8 3/8"R	610790.9310	432659.7590
W.P. 2	101+13.85	0	610724.2382	432693.3798
W.P. 3	101+24.04	42'-5 1/4"L	610683.9432	432710.1466
W.P. 4	101+31.21	91'-11 1/16"L	610639.7356	432733.5067
W.P. 5	102+22.63	29'-4 1/4"R	610683.8712	432588.1927
W.P. 6	102+28.27	0	610656.8299	432600.9282
W.P. 7	102+36.21	41'-4 1/4"L	610618.7312	432618.8648
W.P. 8	103+62.47	62'-5 5/8"R	610624.4700	432458.4379
W.P. 9	103+39.77	0	610591.1399	432510.8334
W.P. 10	103+80.48	80'-5 3/4"L	610507.1536	432521.6868

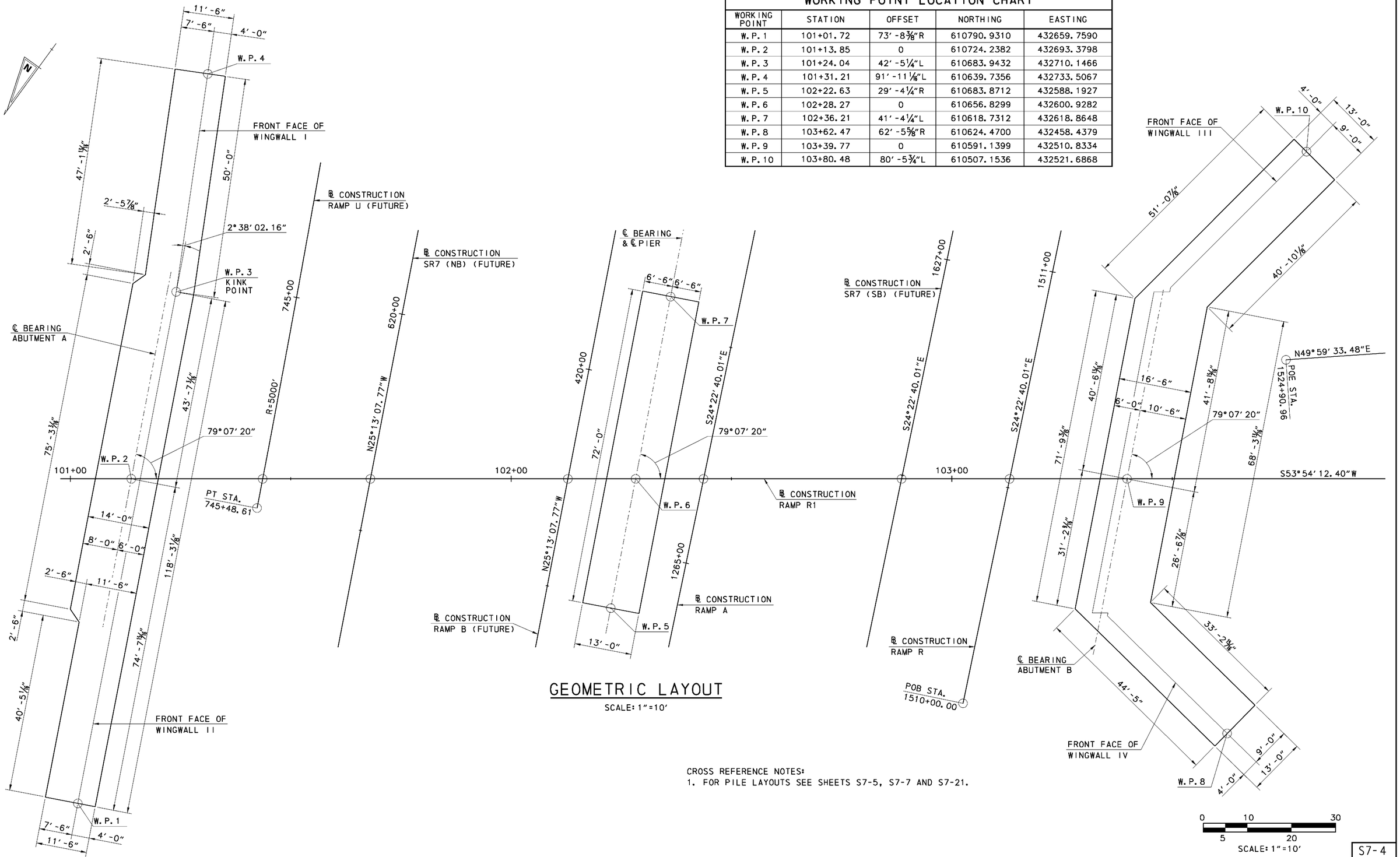

GEOMETRIC LAYOUT

SCALE: 1"=10'

CROSS REFERENCE NOTES:
1. FOR PILE LAYOUTS SEE SHEETS S7-5, S7-7 AND S7-21.

9/24/2010 12:17:59 PM
M:\PROJECTS\2003\03059_DELTRNPK\SRIMALL\CADD\3009004\PLANS\FT01_BR-S7_RAMPR1.DGN

DELAWARE DEPARTMENT OF TRANSPORTATION

ADDENDUMS / REVISIONS

SR1/I-95 INTERCHANGE - CHRISTIANA MALL ROAD BRIDGE

CONTRACT	BRIDGE NO.	1-223
T201009004	DESIGNED BY:	JMS
COUNTY		
NEW CASTLE	CHECKED BY:	JSW

RAMP R1 OVER SR7 GEOMETRIC AND FOOTING LAYOUT

S7-4

SHEET NO. 39

TOTAL SHTS. 164

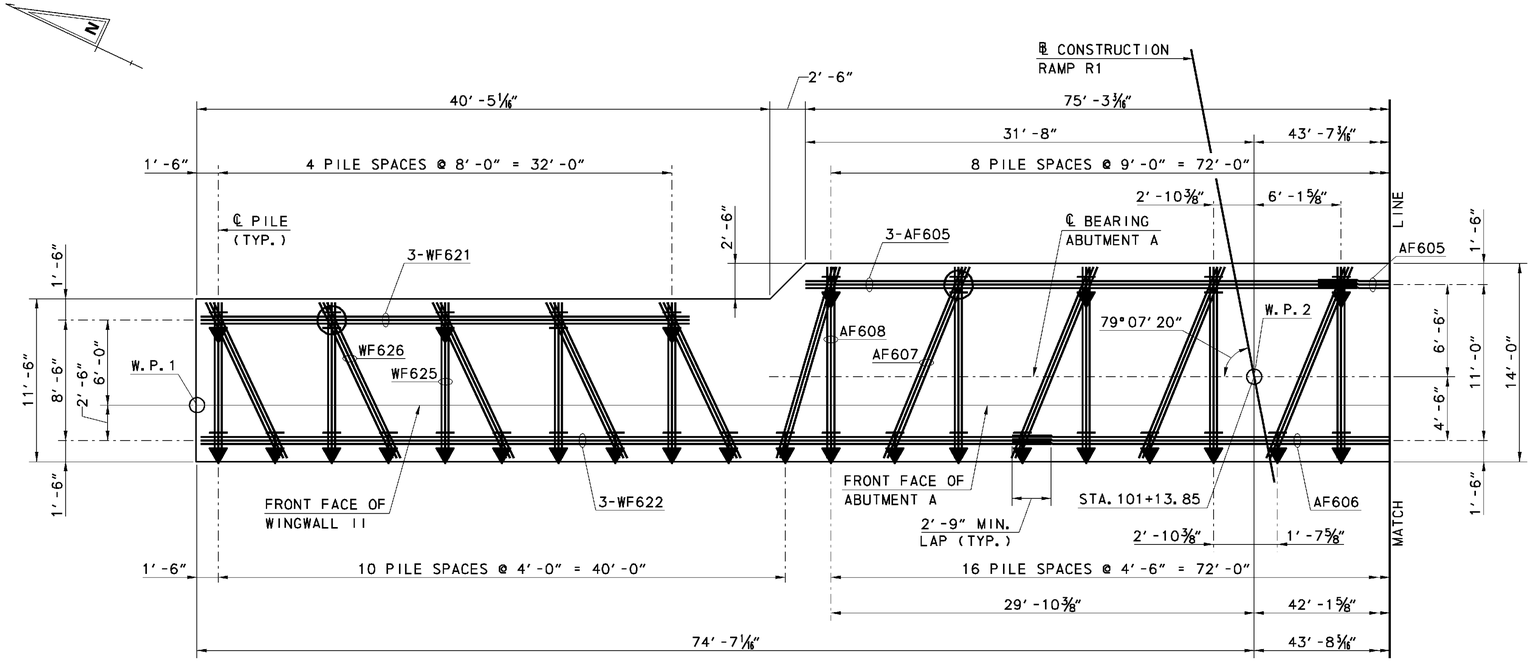

PARTIAL PILE PLAN - ABUTMENT A

SCALE: 3/16" = 1' -0"

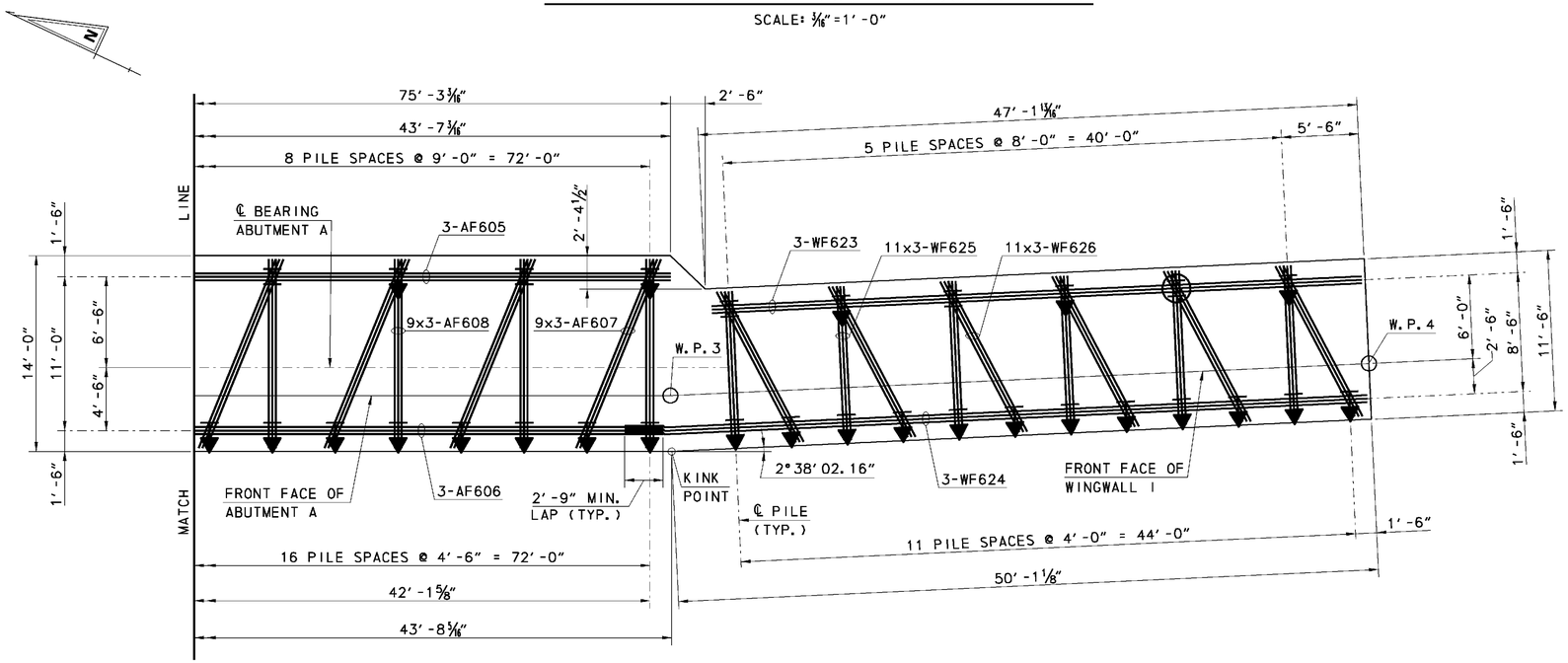

PARTIAL PILE PLAN - ABUTMENT A

SCALE: 3/16" = 1' -0"

LEGEND

- DENOTES HP14x89 - PLUMB PILE
- DENOTES HP14x89 - BATTERED PILE (BATTER = 4H: 12V IN DIRECTION OF ARROW)
- DENOTES HP14x89 - TEST PILE

CROSS REFERENCE NOTES:

1. FOR WORK POINT LOCATIONS SEE SHEET S7-4.
2. FOR ABUTMENT A FOOTING REINFORCING SEE SHEETS S7-6, S7-9, S7-14 AND S7-15.
3. FOR PILE DRIVING DATA, SEE SHEET S7-3.

0 2 4 8 16

SCALE: 3/16" = 1' -0"

8/19/2010 11:37:50 AM
M:\PROJECTS\2003\03059_DELTRNPK\SR1MALL\CADD\3009004\PLANS\FT02_BR-S7_RAMPR1.DGN

DELAWARE DEPARTMENT OF TRANSPORTATION	ADDENDUMS / REVISIONS	SR1/I-95 INTERCHANGE - CHRISTIANA MALL ROAD BRIDGE	CONTRACT T201009004	BRIDGE NO. 1-223	RAMP R1 OVER SR7 ABUTMENT A PILE PLAN	S7-5
			COUNTY NEW CASTLE	DESIGNED BY: JMS		SHEET NO. 40
				CHECKED BY: JSW		TOTAL SHTS. 164

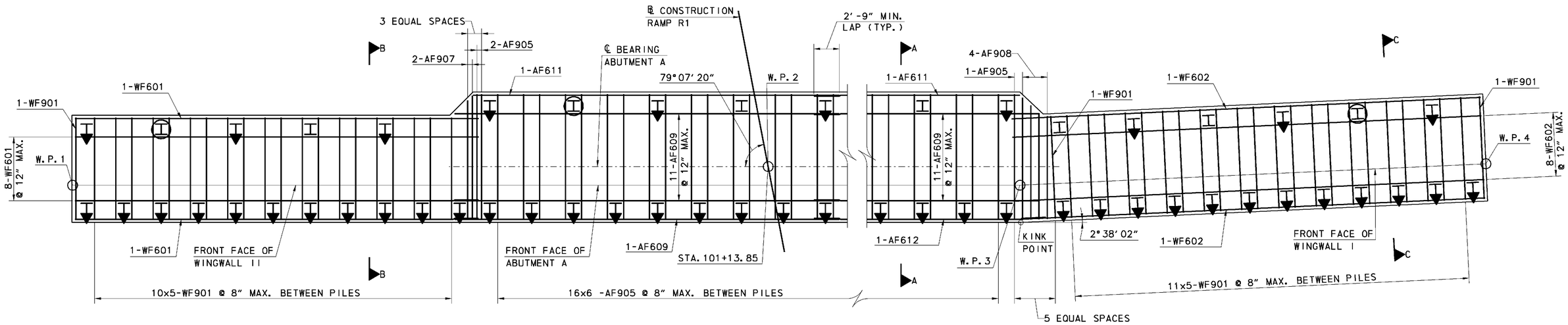

ABUTMENT A FOOTING PLAN

BOTTOM REINFORCING MAT

SCALE: 3/16" = 1'-0"

NOTES:
1. ALL REINFORCING BARS SHALL BE 2" MIN. CLEAR FROM ALL PILES.

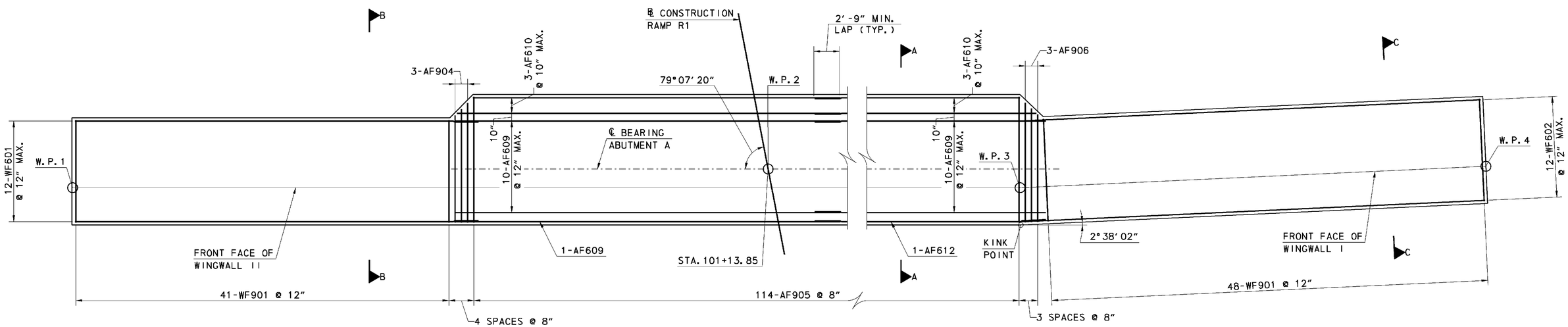

ABUTMENT A FOOTING PLAN

TOP REINFORCING MAT

SCALE: 3/16" = 1'-0"
(DOWEL BARS NOT SHOWN)

CROSS REFERENCE NOTES:
1. FOR WORK POINT LOCATIONS, SEE SHEET S7-4.
2. FOR SECTION A-A, SEE SHEET S7-9.
3. FOR SECTION B-B, SEE SHEET S7-15.
4. FOR SECTION C-C, SEE SHEET S7-16.

0 4 16
2 8
SCALE: 3/16"=1'-0"

8/19/2010 11:40:01 AM
M:\PROJECTS\2003\03059_DELTRNPK\SRIMALL\CADD\3009004\PLANS\FT03_BR-S7_RAMPR1.DGN

DELAWARE DEPARTMENT OF TRANSPORTATION	ADDENDUMS / REVISIONS	SR1/I-95 INTERCHANGE - CHRISTIANA MALL ROAD BRIDGE	CONTRACT T201009004	BRIDGE NO. 1-223	RAMP R1 OVER SR7 ABUTMENT A - FOOTING REINFORCING PLAN	S7-6
			COUNTY NEW CASTLE	DESIGNED BY: JMS		SHEET NO. 41
				CHECKED BY: JSW		TOTAL SHTS. 164

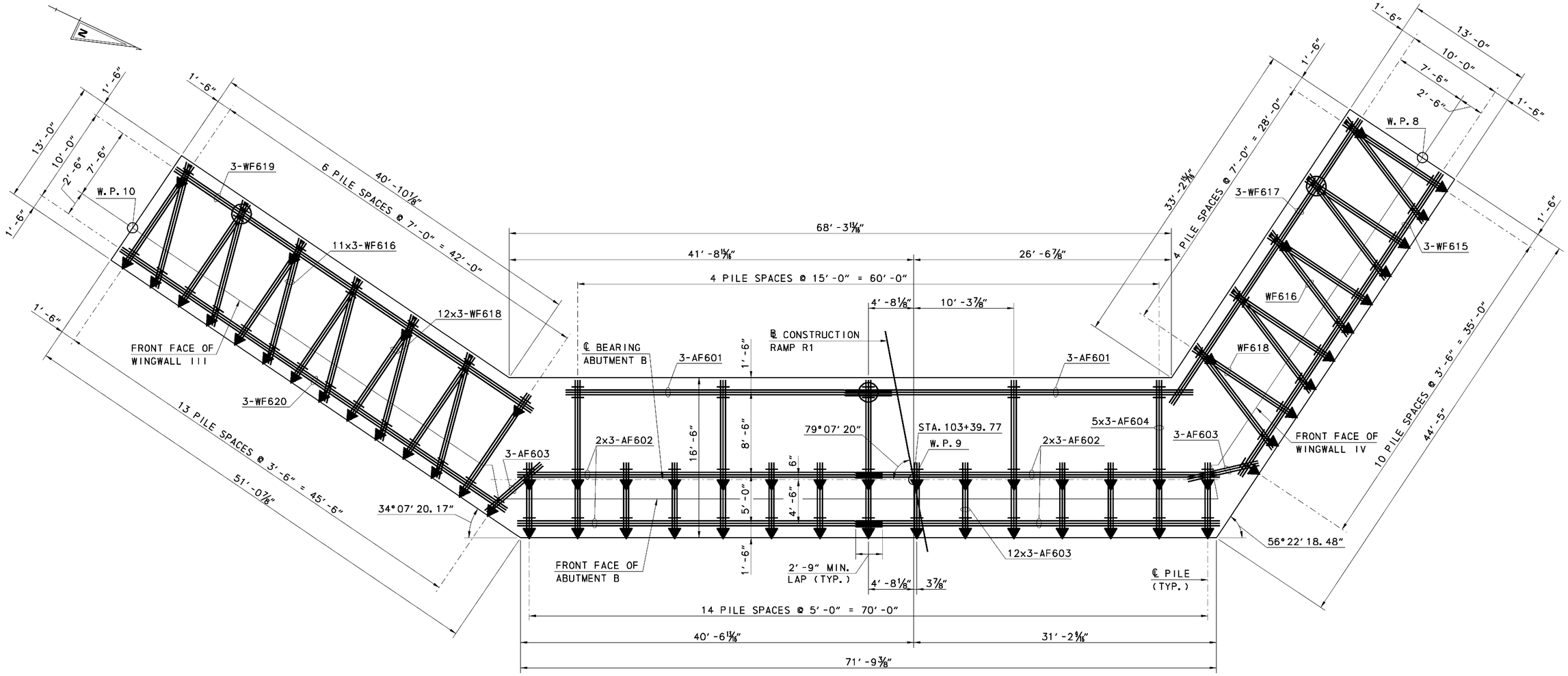

PILE PLAN - ABUTMENT B

SCALE: 3/16" = 1'-0"

CROSS REFERENCE NOTES:

1. FOR WORKPOINT LOCATIONS, SEE SHEET S7-4.
2. FOR ABUTMENT B FOOTING REINFORCING SEE SHEETS S7-8, S7-11, S7-16 AND S7-17.
3. FOR PILE DRIVING DATA, SEE SHEET S7-3.

LEGEND

- DENOTES HP14x89 - PLUMB PILE
- DENOTES HP14x89 - BATTERED PILE (BATTER = 4H:12V IN DIRECTION OF ARROW)
- DENOTES HP14x89 - TEST PILE

0 2 4 8 16

SCALE: 3/16" = 1'-0"

DELAWARE DEPARTMENT OF TRANSPORTATION	ADDENDUMS / REVISIONS	SR1/I-95 INTERCHANGE - CHRISTIANA MALL ROAD BRIDGE	CONTRACT T201009004	BRIDGE NO. 1-223	RAMP R1 OVER SR7 ABUTMENT B PILE PLAN	S7-7
			COUNTY NEW CASTLE	DESIGNED BY: JMS		SHEET NO. 42
				CHECKED BY: JSW		TOTAL SHTS. 164

9/24/2010 12:19:26 PM
M:\PROJECTS\2003\03059_DELTRNPK\SR1MALL\CADD\3009004\PLANS\FT04_BR-S7_RAMPR1.DGN

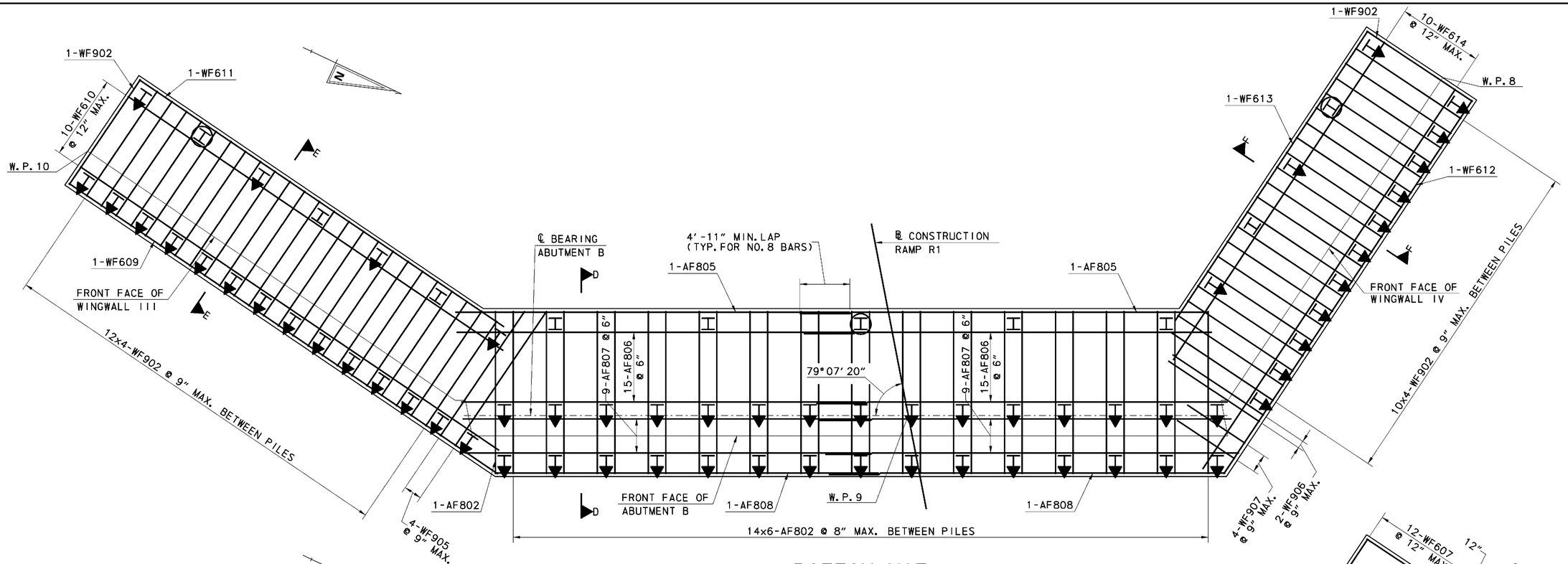

BOTTOM MAT

SCALE: 3/16" = 1'-0"

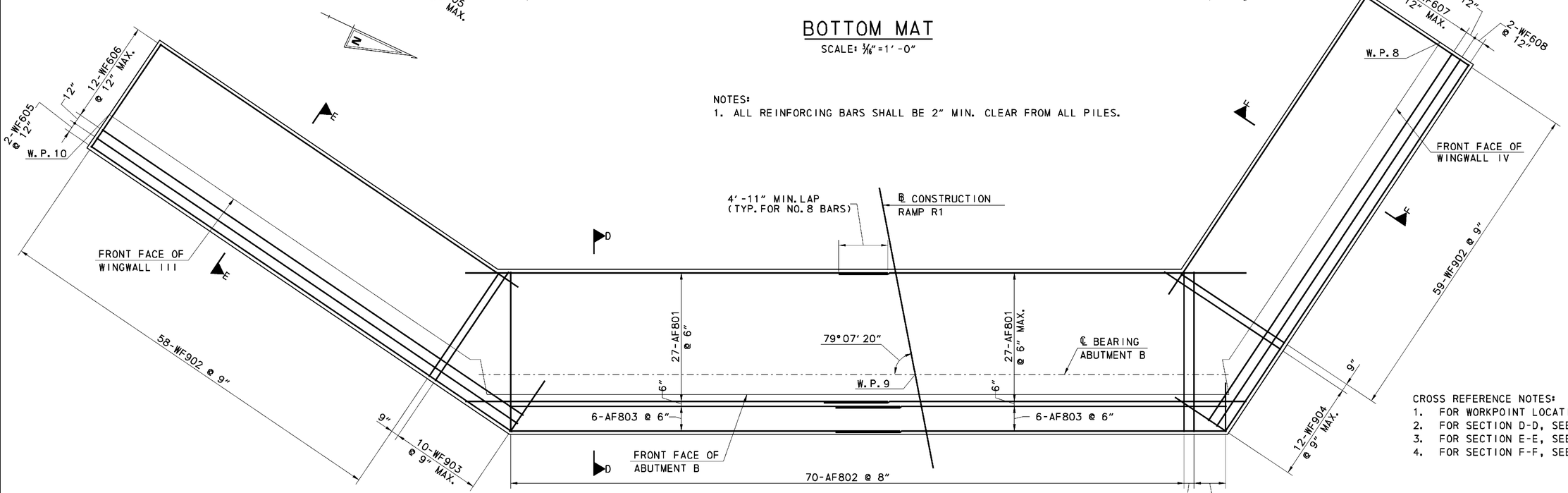

NOTES:
1. ALL REINFORCING BARS SHALL BE 2" MIN. CLEAR FROM ALL PILES.

TOP MAT

SCALE: 3/16" = 1'-0"
(DOWEL BARS NOT SHOWN)

CROSS REFERENCE NOTES:
1. FOR WORKPOINT LOCATIONS, SEE SHEET S7-4.
2. FOR SECTION D-D, SEE SHEET S7-11.
3. FOR SECTION E-E, SEE SHEET S7-16.
4. FOR SECTION F-F, SEE SHEET S7-17.

0 2 4 8 16
SCALE: 3/16" = 1'-0"

DELAWARE DEPARTMENT OF TRANSPORTATION	ADDENDUMS / REVISIONS	SR1/I-95 INTERCHANGE - CHRISTIANA MALL ROAD BRIDGE	CONTRACT T201009004	BRIDGE NO. 1-223	RAMP R1 OVER SR7 ABUTMENT B - FOOTING REINFORCING PLAN	SHEET NO. S7-8
			COUNTY NEW CASTLE	DESIGNED BY: JMS		43
				CHECKED BY: JSW		TOTAL SHTS. 164

9/24/2010 12:23:21 PM
M:\PROJECTS\2003\03059_DELTRNPK\SR1MALL\CADD\3009004\PLANS\FT05_BR-S7_RAMPR1.DGN

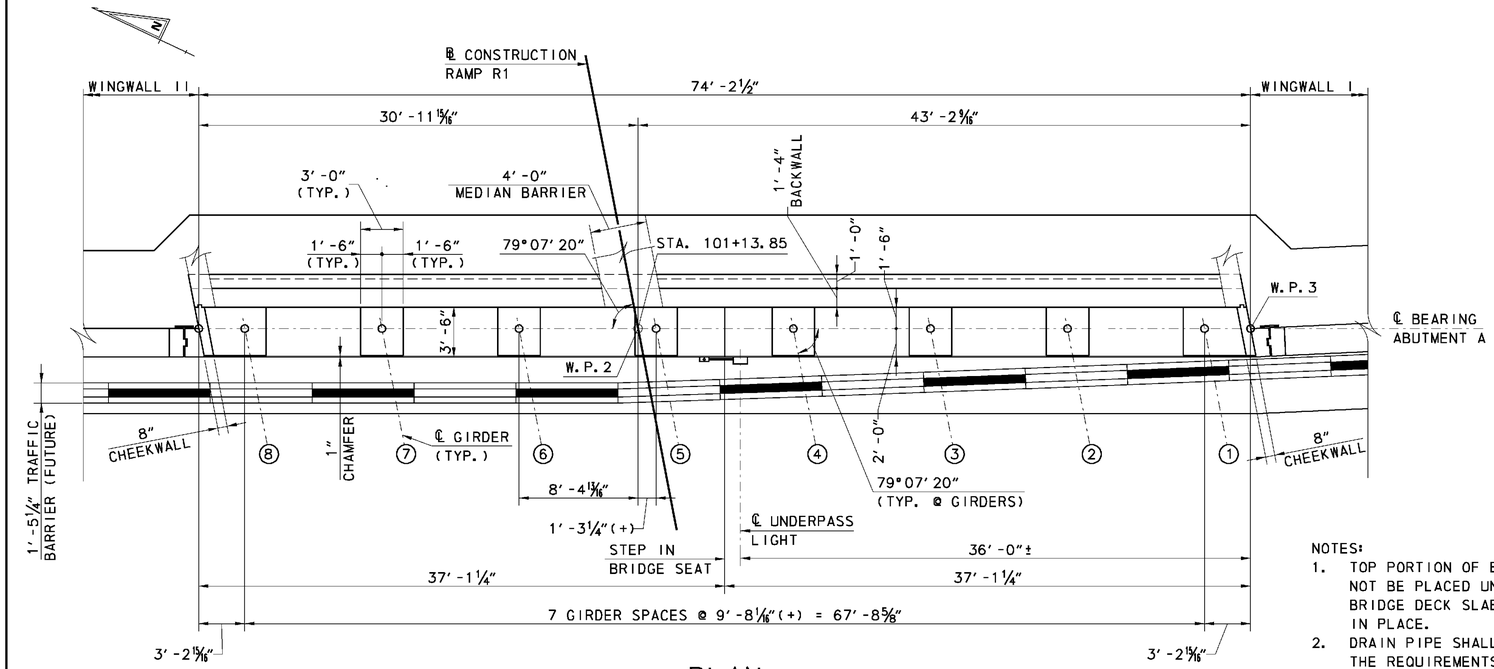

PLAN

(APPROACH SLAB NOT SHOWN)
SCALE: 3/16"=1' -0"

NOTES:

1. TOP PORTION OF BACKWALL SHALL NOT BE PLACED UNTIL ENTIRE BRIDGE DECK SLAB IS COMPLETE IN PLACE.
2. DRAIN PIPE SHALL CONFORM TO THE REQUIREMENTS OF SECTION 715 OF THE SPECIFICATIONS.
3. CRUSHED STONE SHALL CONFORM TO THE REQUIREMENTS OF SECTION 813 OF THE SPECIFICATIONS.
4. ATTACH JUNCTION BOX, LIGHTING AND CONDUIT PER MANUFACTURER'S RECOMMENDATIONS.

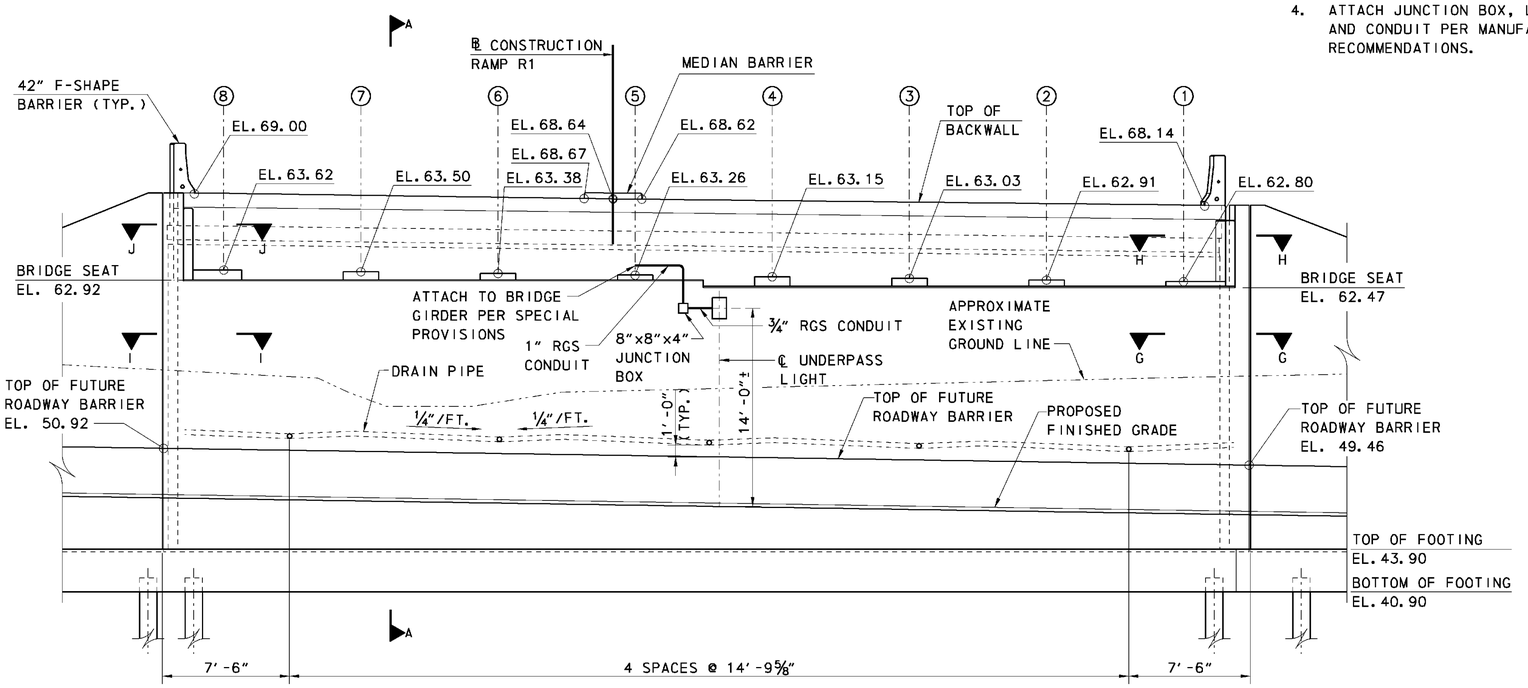

ELEVATION

SCALE: 3/16"=1' -0"

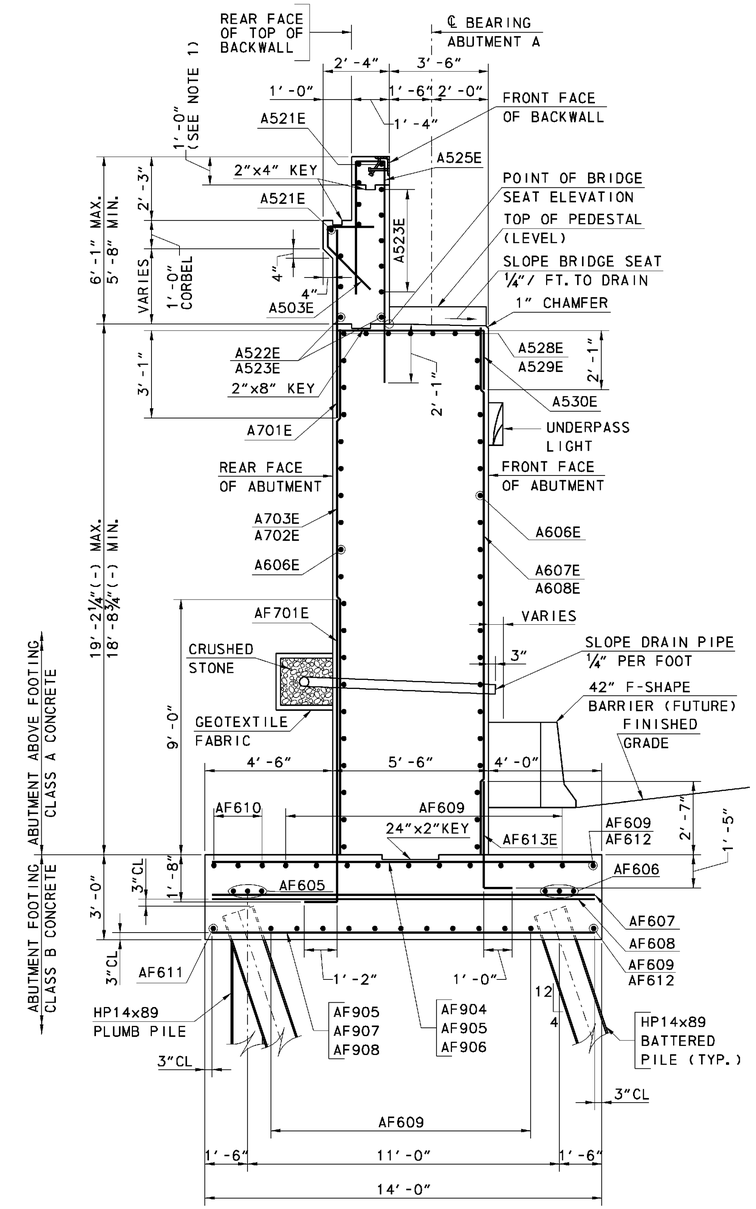

SECTION A-A

SCALE: 3/8"=1' -0"

CROSS REFERENCE NOTES:

1. FOR BEARING DETAILS, SEE SHEET S7-25.
2. FOR APPROACH SLAB, SEE SHEETS S7-35 TO S7-39.
3. FOR ABUTMENT REINFORCING, SEE SHEET S7-10.
4. FOR WINGWALL DETAILS, SEE SHEET S7-14 AND S7-15.
5. FOR SECTIONS G-G, H-H, I-I & J-J, SEE SHEET S7-13.
6. FOR PEDESTAL & STEM JOINT DETAILS, SEE SHEET S7-13.
7. FOR PILE LAYOUT, SEE SHEET S7-5.
8. FOR CONDUIT DETAILS, SEE LIGHTING PLANS.

0 4 16
2 8
SCALE: 3/16"=1' -0"

0 2 8
1 4
SCALE: 3/8"=1' -0"

S7-9

9/24/2010 2:03:57 PM
M:\PROJECTS\2003\03059_DELTRNPK\SRIMALL\CADD\3009004\PLANS\AB01_BR-S7_RAMPR1.DGN

DELAWARE DEPARTMENT OF TRANSPORTATION	ADDENDUMS / REVISIONS	SR1/I-95 INTERCHANGE - CHRISTIANA MALL ROAD BRIDGE	CONTRACT T201009004	BRIDGE NO. 1-223	RAMP R1 OVER SR7 ABUTMENT A PLAN & ELEVATION
			COUNTY NEW CASTLE	DESIGNED BY: JMS	SHEET NO. 44
				CHECKED BY: JSW	TOTAL SHTS. 164

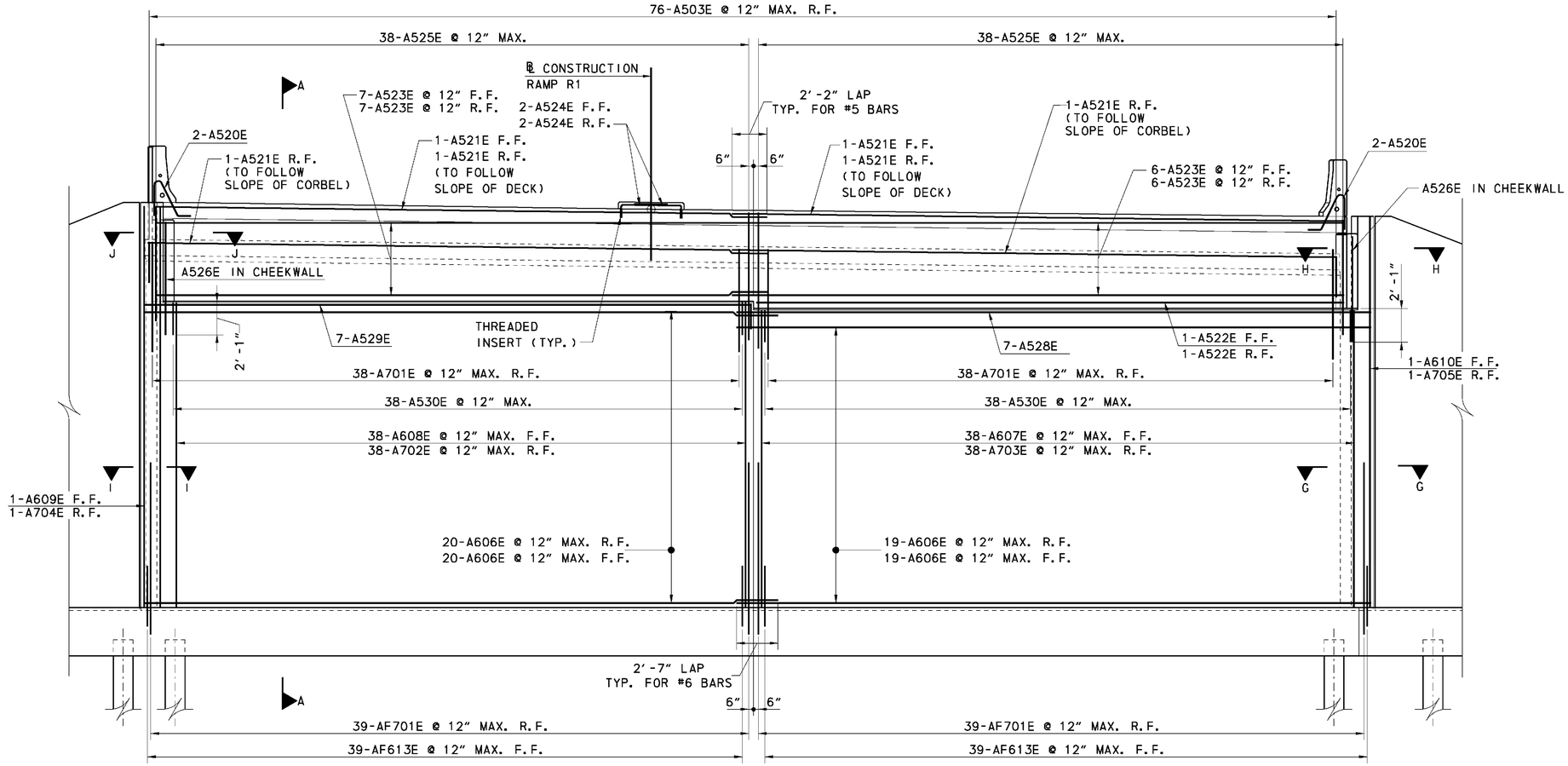

REINFORCING ELEVATION

SCALE: ¼"=1'-0"

NOTES:
1. PEDESTALS AND PEDESTAL REINFORCING NOT SHOWN FOR CLARITY.

CROSS REFERENCE NOTES:
1. FOR SECTION A-A, SEE SHEET S7-9.
2. FOR APPROACH SLAB, SEE SHEETS S7-35 TO S7-39.
3. FOR WINGWALL DETAILS, SEE SHEETS S7-14 AND S7-15.
4. FOR STEM JOINT DETAIL, SEE SHEET S7-13.
5. FOR PEDESTAL REINFORCING, SEE SHEET S7-13.

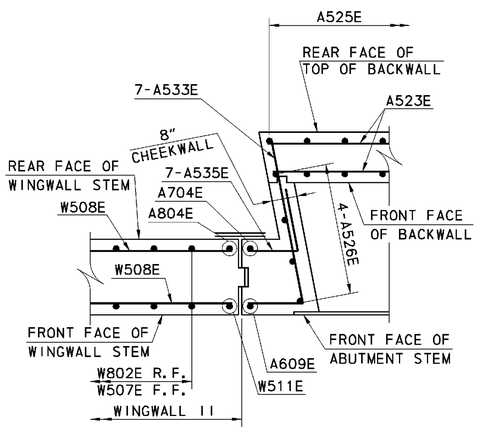

SECTION J-J

SECTION ABOVE BEAM SEAT THROUGH TOP OF BACKWALL
SCALE: ½"=1'-0"

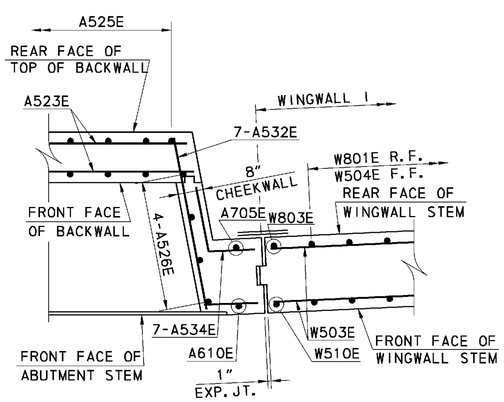

SECTION H-H

SECTION ABOVE BEAM SEAT THROUGH TOP OF BACKWALL
SCALE: ½"=1'-0"

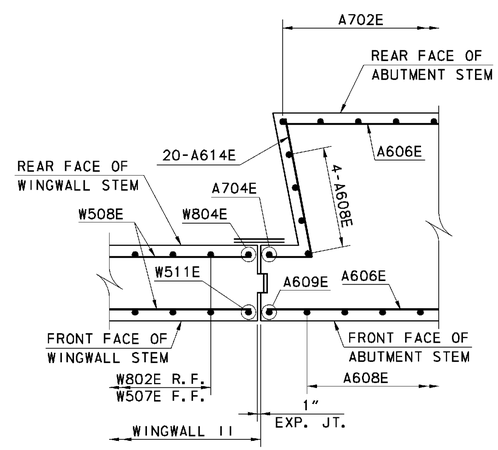

SECTION I-I

SECTION BELOW BEAM SEAT
SCALE: ½"=1'-0"

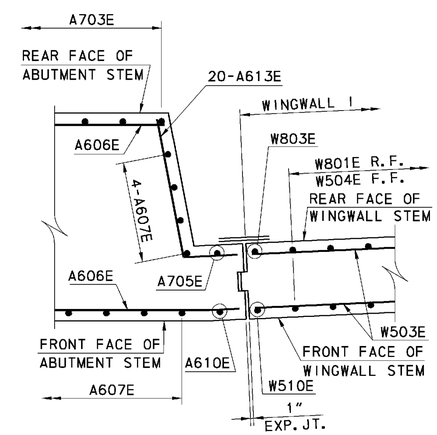

SECTION G-G

SECTION BELOW BEAM SEAT
SCALE: ½"=1'-0"

0 2 8
1 4
SCALE: ¼"=1'-0"

0 1 4
½ 2
SCALE: ½"=1'-0"

9/24/2010 12:56:03 PM
M:\PROJECTS\2003\03059_DELTRNPK\SRMALL\CADD\3009004\PLANS\AB03_BR-S7_RAMPR1.DGN

DELAWARE DEPARTMENT OF TRANSPORTATION	ADDENDUMS / REVISIONS	SR1/I-95 INTERCHANGE - CHRISTIANA MALL ROAD BRIDGE	CONTRACT T201009004	BRIDGE NO. 1-223	RAMP R1 OVER SR7 ABUTMENT A REINFORCING ELEVATION	S7-10
			COUNTY NEW CASTLE	DESIGNED BY: JMS		SHEET NO. 45
				CHECKED BY: JSW		TOTAL SHTS. 164

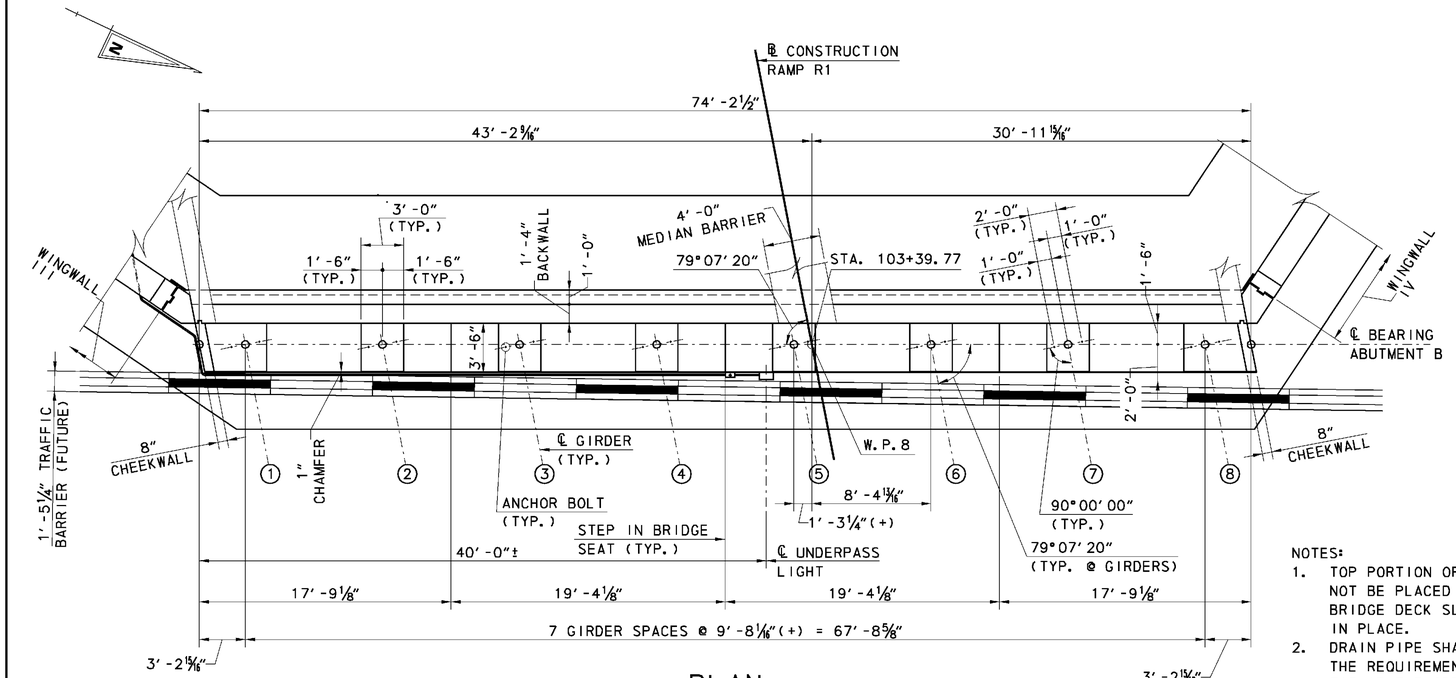

PLAN

SCALE: 3/16" = 1' -0"

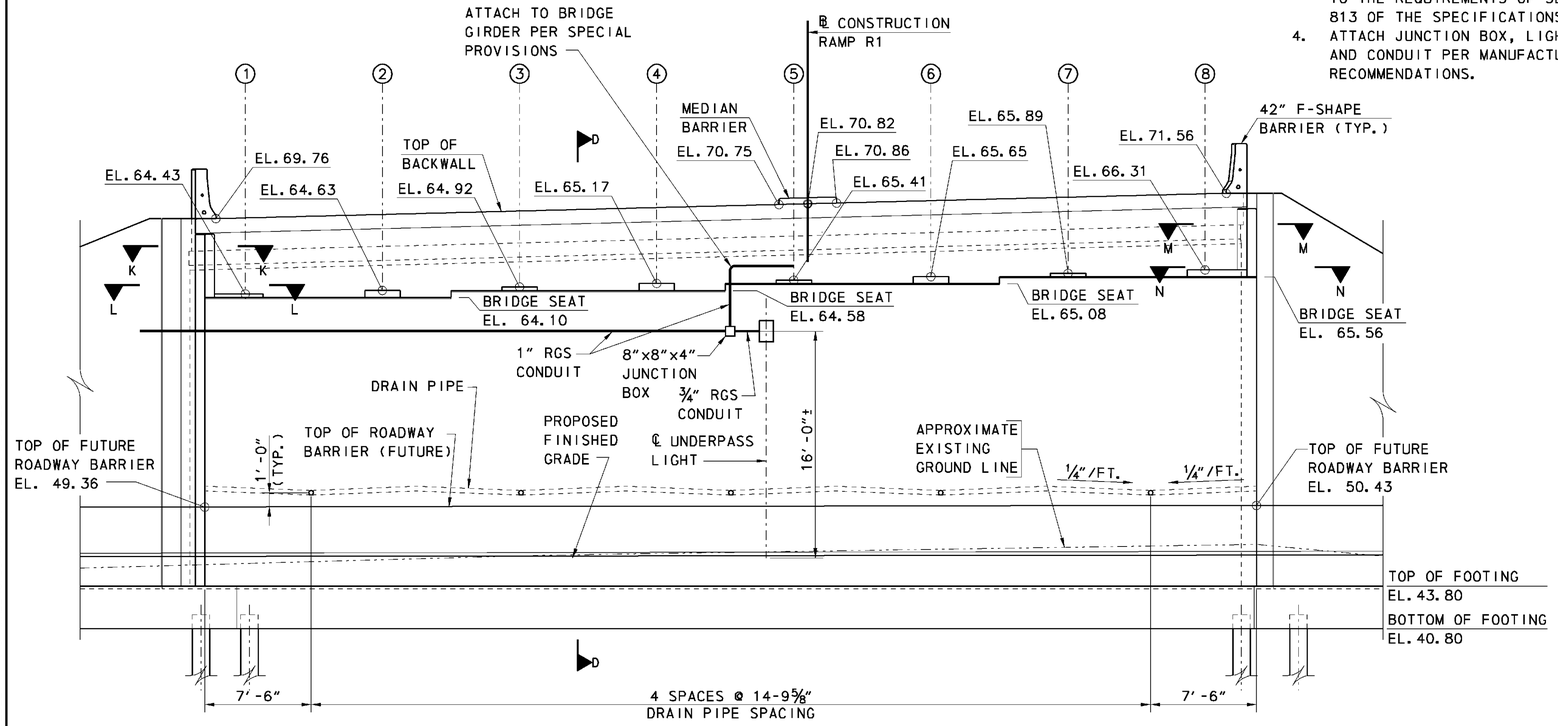

ELEVATION

SCALE: 3/16" = 1' -0"

NOTES:

1. TOP PORTION OF BACKWALL SHALL NOT BE PLACED UNTIL ENTIRE BRIDGE DECK SLAB IS COMPLETE IN PLACE.
2. DRAIN PIPE SHALL CONFORM TO THE REQUIREMENTS OF SECTION 715 OF THE SPECIFICATIONS.
3. CRUSHED STONE SHALL CONFORM TO THE REQUIREMENTS OF SECTION 813 OF THE SPECIFICATIONS.
4. ATTACH JUNCTION BOX, LIGHTING AND CONDUIT PER MANUFACTURER'S RECOMMENDATIONS.

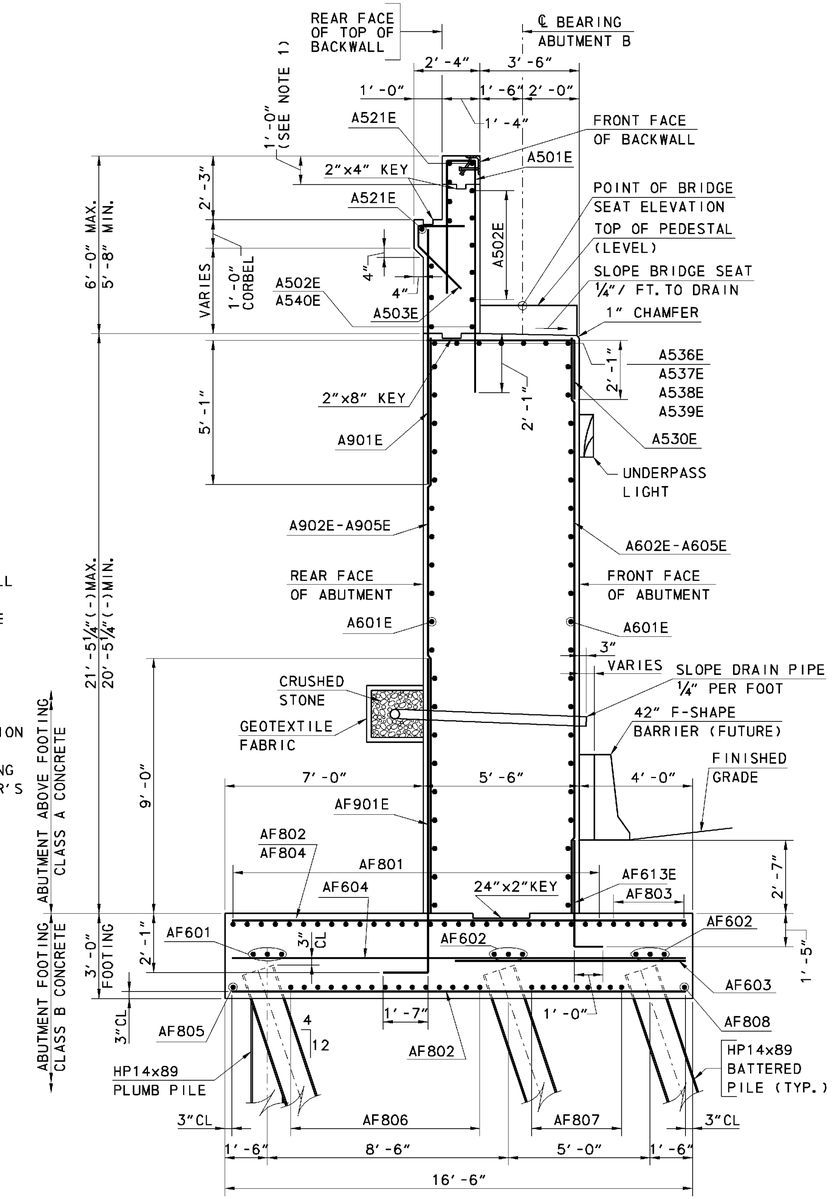

SECTION D-D

SCALE: 3/8" = 1' -0"

CROSS REFERENCE NOTES:

1. FOR BEARING DETAILS, SEE SHEET S7-25.
2. FOR APPROACH SLAB, SEE SHEETS S7-35 TO S7-39.
3. FOR ABUTMENT REINFORCING, SEE SHEET S7-12.
4. FOR WINGWALL DETAILS, SEE SHEETS S7-16 AND S7-17.
5. FOR SECTIONS K-K THROUGH N-N, SEE SHEET S7-12.
6. FOR PEDESTAL & STEM JOINT DETAILS, SEE SHEET S7-12.
7. FOR PILE LAYOUT, SEE SHEET S7-7.
8. FOR CONDUIT DETAILS, SEE LIGHTING PLANS.

0 4 16
2 8
SCALE: 3/16" = 1' -0"

0 2 8
1 4
SCALE: 3/8" = 1' -0"

9/27/2010 7:18:45 AM
M:\PROJECTS\2003\03059_DELTRNPK\SRIMALL\CADD\3009004\PLANS\AB02_BR-S7_RAMPR1.DGN

DELAWARE DEPARTMENT OF TRANSPORTATION

ADDENDUMS / REVISIONS

SR1/I-95 INTERCHANGE - CHRISTIANA MALL ROAD BRIDGE

CONTRACT	BRIDGE NO.	1-223
T201009004	DESIGNED BY:	JMS
COUNTY		
NEW CASTLE	CHECKED BY:	JSW

RAMP R1 OVER SR7 ABUTMENT B PLAN AND ELEVATION

S7-11

SHEET NO. 46

TOTAL SHTS. 164

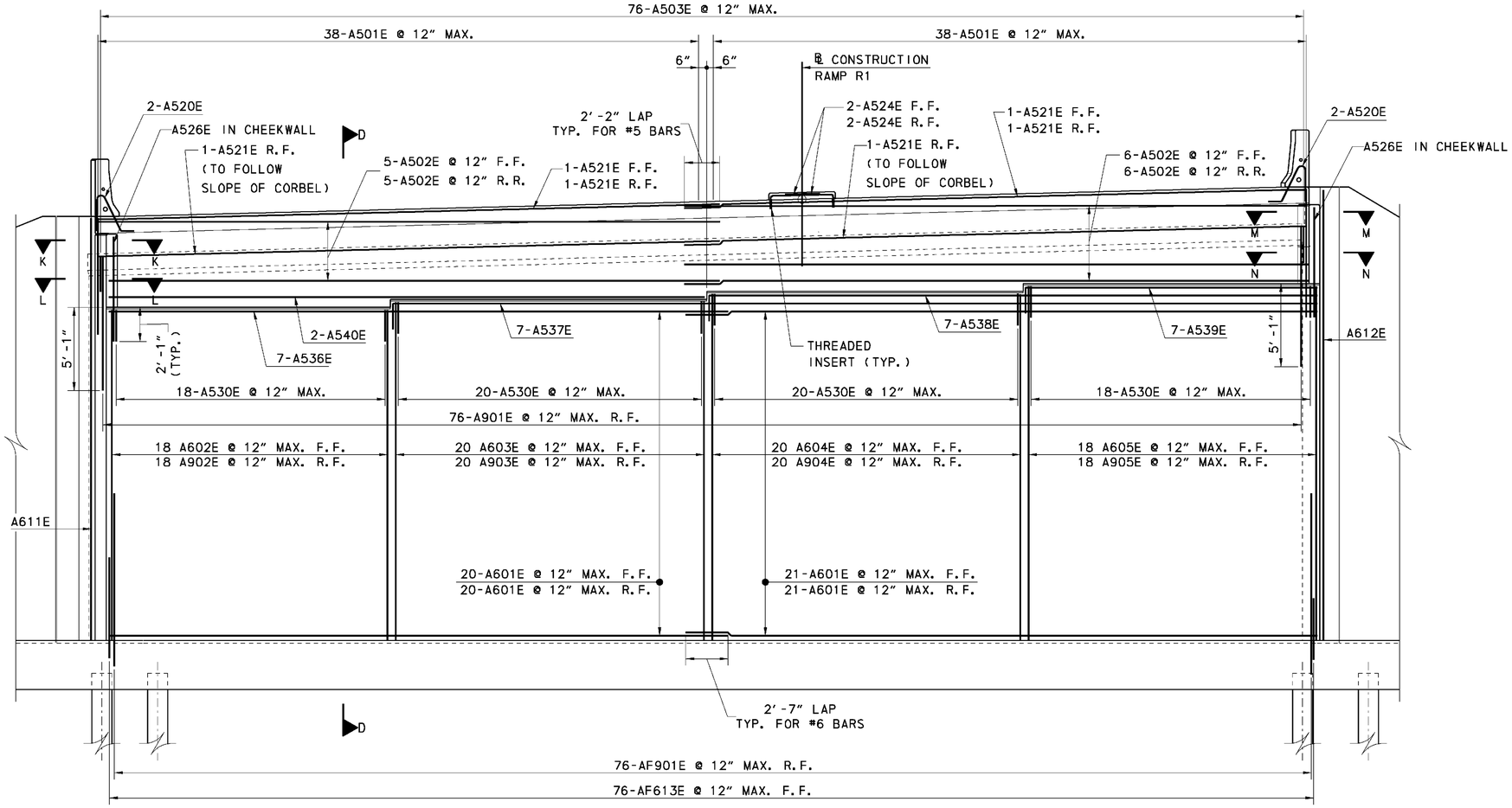

REINFORCING ELEVATION

SCALE: ¼"=1'-0"

NOTES:

1. PEDESTALS AND PEDESTAL REINFORCING NOT SHOWN FOR CLARITY.

CROSS REFERENCE NOTES:

1. FOR SECTION D-D, SEE SHEET S7-11.
2. FOR APPROACH SLAB, SEE SHEETS S7-35 TO S7-39.
3. FOR WINGWALL DETAILS, SEE SHEETS S7-16 AND S7-17.
4. FOR STEM JOINT DETAIL, SEE SHEET S7-13.
5. FOR PEDESTAL REINFORCING, SEE SHEET S7-13.

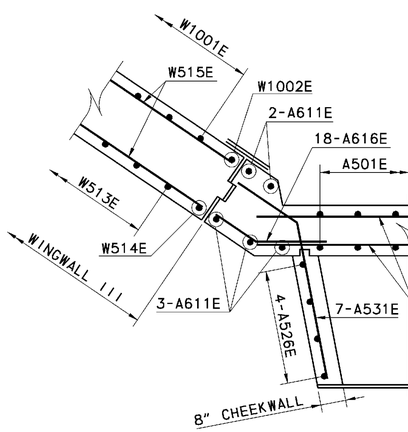

SECTION K-K

SCALE: ½"=1'-0"

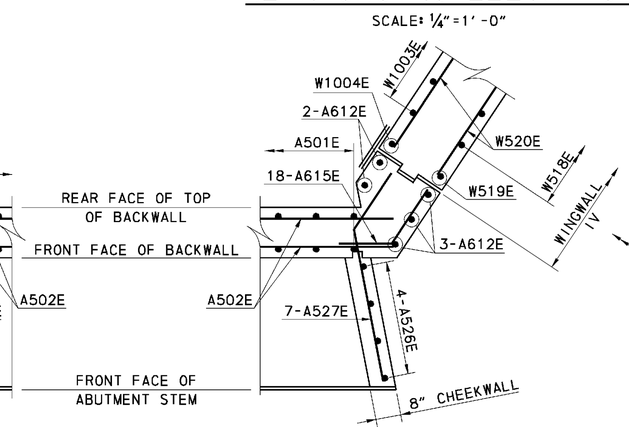

SECTION M-M

SCALE: ½"=1'-0"

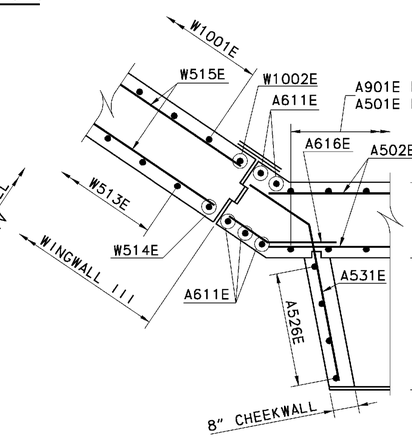

SECTION L-L

SCALE: ½"=1'-0"

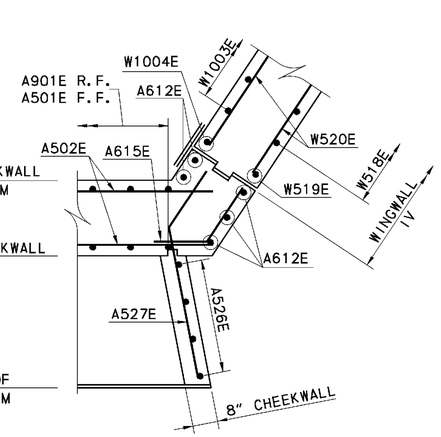

SECTION N-N

SCALE: ½"=1'-0"

0 2 8
1 4
SCALE: ¼"=1'-0"

0 1 4
.5 2
SCALE: ½"=1'-0"

DELAWARE DEPARTMENT OF TRANSPORTATION	ADDENDUMS / REVISIONS	SR1/I-95 INTERCHANGE - CHRISTIANA MALL ROAD BRIDGE	CONTRACT T201009004	BRIDGE NO. 1-223	RAMP R1 OVER SR7 ABUTMENT B REINFORCING ELEVATION	S7-12
			COUNTY NEW CASTLE	DESIGNED BY: JMS		SHEET NO. 47
				CHECKED BY: JSW		TOTAL SHTS. 164

9/24/2010 1:10:53 PM
M:\PROJECTS\2003\03059_DELTRNPK\SRIWALL\CADD\3009004\PLANS\AB04_BR-S7_RAMPR1.DGN

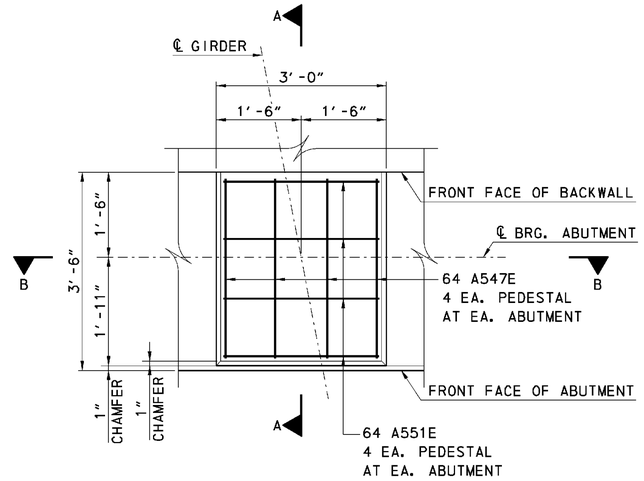

PLAN
ABUTMENT PEDESTAL

SCALE: ¾″=1′-0″

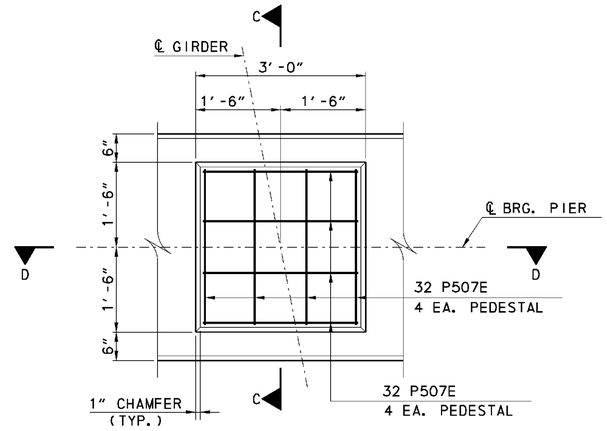

PLAN
PIER PEDESTAL

SCALE: ¾″=1′-0″

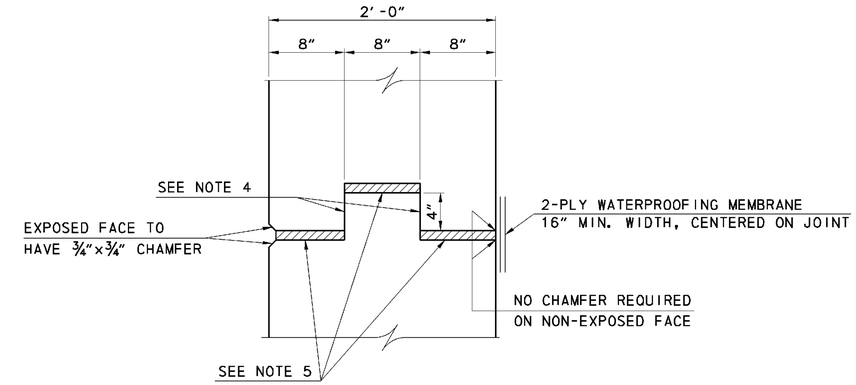

PLAN SECTION
STEM EXPANSION JOINT

SCALE: 1½″=1′-0″

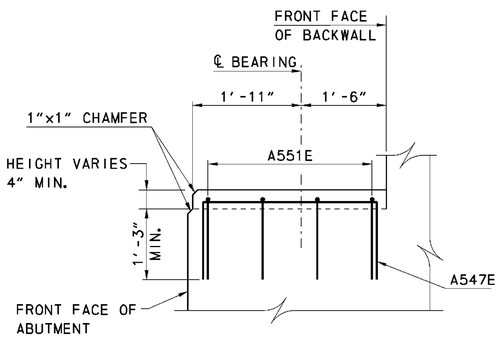

SECTION A-A

SCALE: ¾″=1′-0″

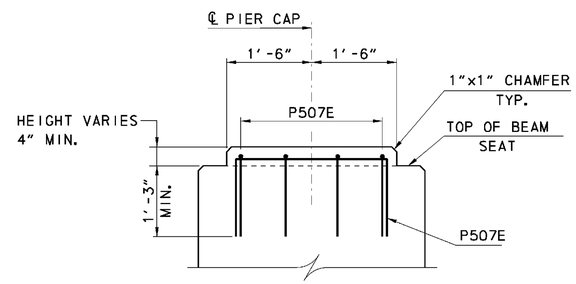

SECTION C-C

SCALE: ¾″=1′-0″

NOTES:
1. STOP KEY 9″ BELOW TOP OF WALL.
2. REINFORCING STEEL SHALL NOT PASS THROUGH EXPANSION JOINT.
3. ONLY PLACE EXPANSION JOINTS IN STEMS (NO JOINTS IN FOOTING).
4. SINGLE LAYER OF TARPAPER FULL HEIGHT OF KEY. FASTEN TO ONE FACE WITH COPPER NAILS.
5. 1″ SPONGE TYPE JOINT MATERIAL FULL HEIGHT OF WALL. FASTEN TO ONE FACE WITH COPPER NAILS.

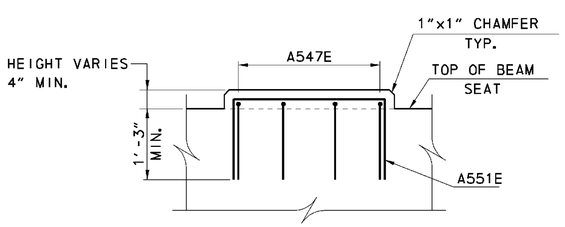

SECTION B-B

SCALE: ¾″=1′-0″

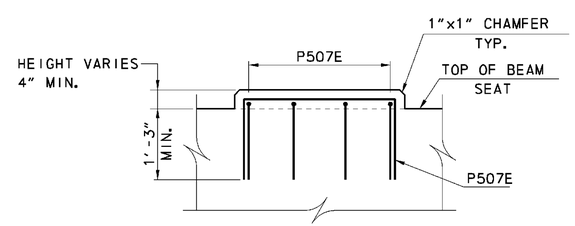

SECTION D-D

SCALE: ¾″=1′-0″

CROSS REFERENCE NOTES:
1. FOR ABUTMENT A REINFORCING, SEE SHEET S7-10.
2. FOR ABUTMENT B REINFORCING, SEE SHEET S7-12.
3. FOR PIER REINFORCING DETAILS, SEE SHEET S7-23.
4. FOR BEARING DETAILS, SEE SHEET S7-25.
5. FOR ABUTMENT PEDESTAL ELEVATIONS, SEE SHEETS S7-9 AND S7-11.
6. FOR PIER PEDESTAL ELEVATIONS, SEE SHEET S7-22.
7. FOR WATERPROOFING MEMBRANE NOTES, SEE GENERAL NOTES, SHEET S7-2.

0 ½ 1 2 4
SCALE: ¾″=1′-0″

0 ½ 1 2
SCALE: 1½″=1′-0″

S7-13

9/24/2010 1:12:59 PM
M:\PROJECTS\2003\03059_DELTRNPK\SR1MALL\CADD\3009004\PLANS\PR04_BR-S7_RAMPR1.DGN

DELAWARE DEPARTMENT OF TRANSPORTATION	ADDENDUMS / REVISIONS	SR1/I-95 INTERCHANGE - CHRISTIANA MALL ROAD BRIDGE	CONTRACT T201009004	BRIDGE NO. 1-223	RAMP R1 OVER SR7 PEDESTAL AND STEM EXPANSION JOINT DETAILS	SHEET NO. 48
			COUNTY NEW CASTLE	DESIGNED BY: ADM		TOTAL SHTS. 164
				CHECKED BY: JSW		

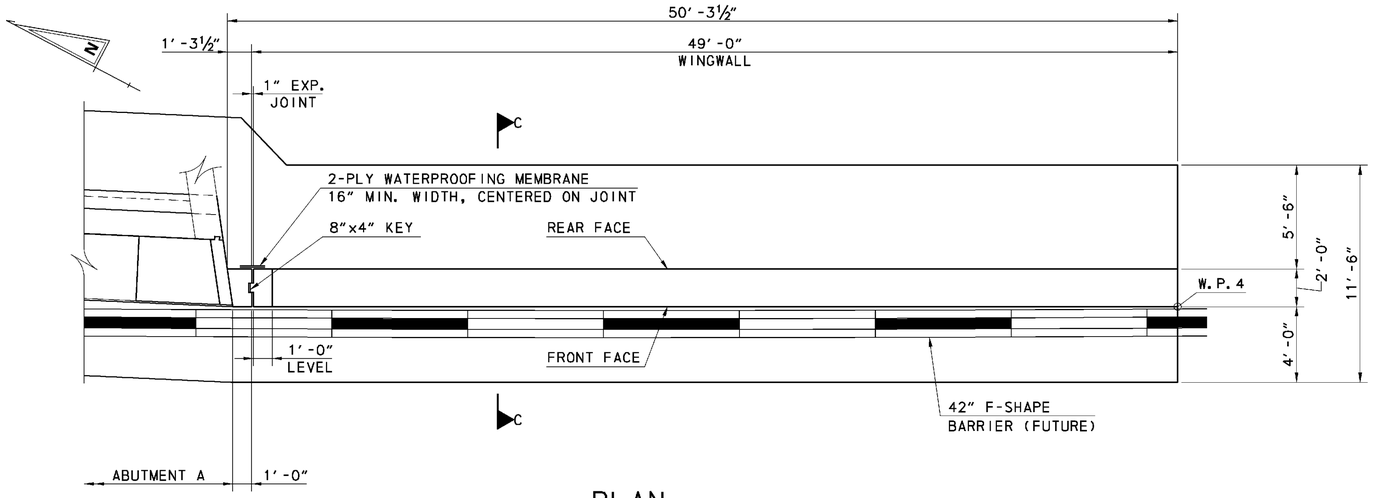

PLAN

SCALE: ¼"=1'-0"

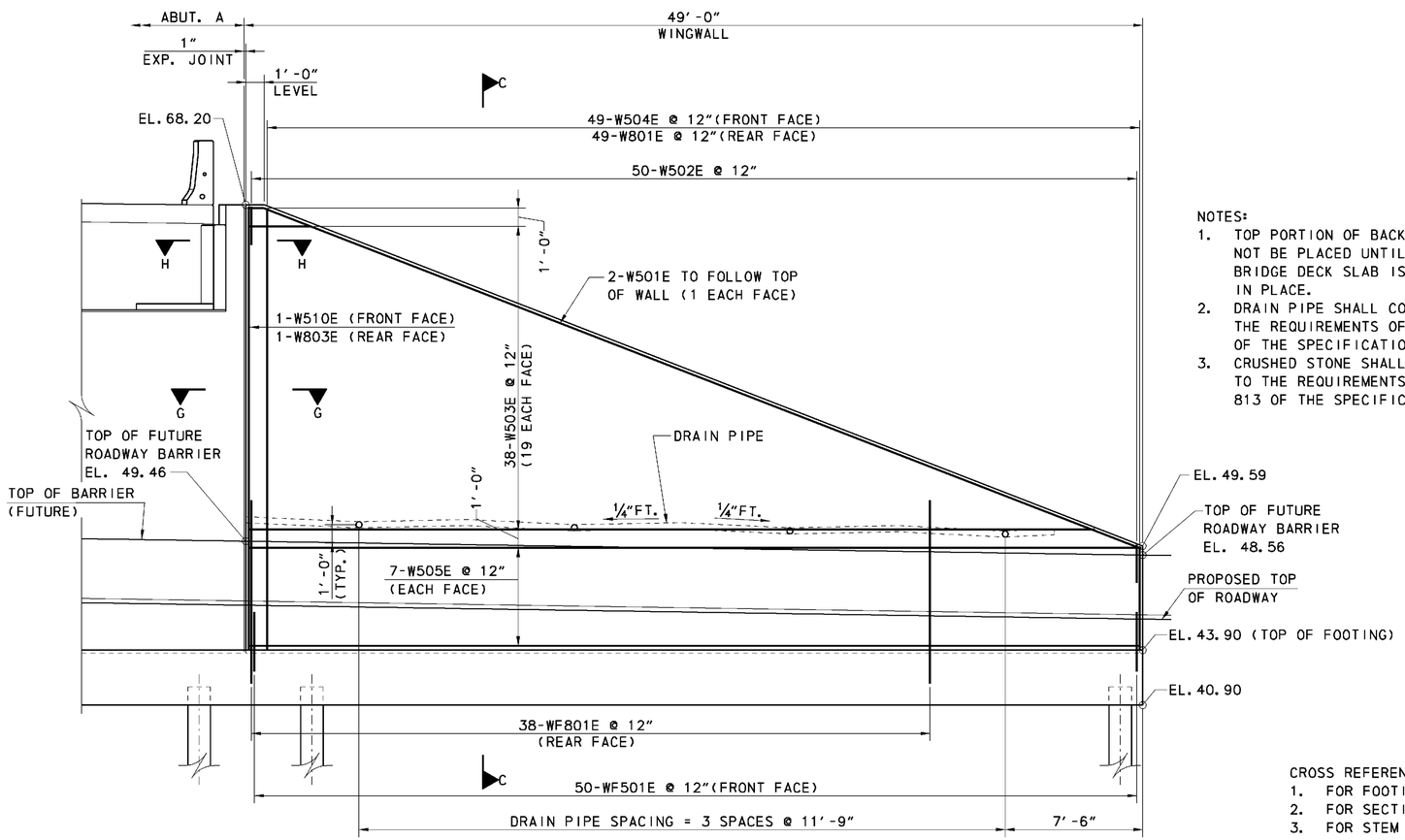

ELEVATION

SCALE: ¼"=1'-0"

NOTES:

1. TOP PORTION OF BACKWALL SHALL NOT BE PLACED UNTIL ENTIRE BRIDGE DECK SLAB IS COMPLETE IN PLACE.
2. DRAIN PIPE SHALL CONFORM TO THE REQUIREMENTS OF SECTION 715 OF THE SPECIFICATIONS.
3. CRUSHED STONE SHALL CONFORM TO THE REQUIREMENTS OF SECTION 813 OF THE SPECIFICATIONS.

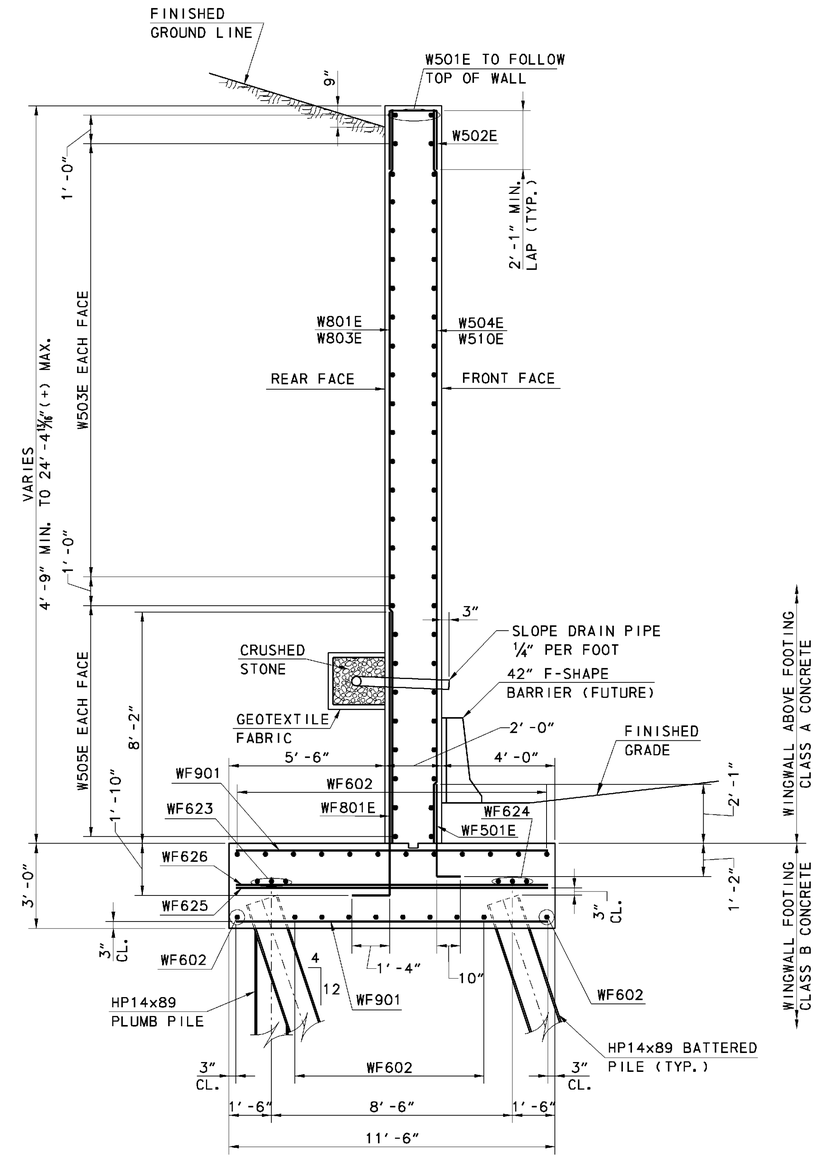

SECTION C-C

SCALE: ⅜"=1'-0"

CROSS REFERENCE NOTES:

1. FOR FOOTING REINFORCING, SEE SHEET S7-6.
2. FOR SECTIONS G-G AND H-H, SEE SHEET S7-10.
3. FOR STEM EXPANSION JOINT DETAILS, SEE SHEET S7-13.
4. FOR WATERPROOFING MEMBRANE NOTES, SEE GENERAL NOTES, SHEET S7-2.

0 2 8
1 4
SCALE: ¼"=1'-0"

0 2 8
1 4
SCALE: ⅜"=1'-0"

9/27/2010 7:44:57 AM
M:\PROJECTS\2003\03059_DELTRNPK\SRIMALL\CADD\3009004\PLANS\WW01_BR-S7_RAMPR1.DGN

DELAWARE DEPARTMENT OF TRANSPORTATION	ADDENDUMS / REVISIONS	SR1/I-95 INTERCHANGE - CHRISTIANA MALL ROAD BRIDGE	CONTRACT T201009004	BRIDGE NO. 1-223	RAMP R1 OVER SR7 WINGWALL I PLAN, ELEVATION & DETAILS	S7-14 SHEET NO. 49
			COUNTY NEW CASTLE	DESIGNED BY: JMS		TOTAL SHTS. 164
				CHECKED BY: JSW		

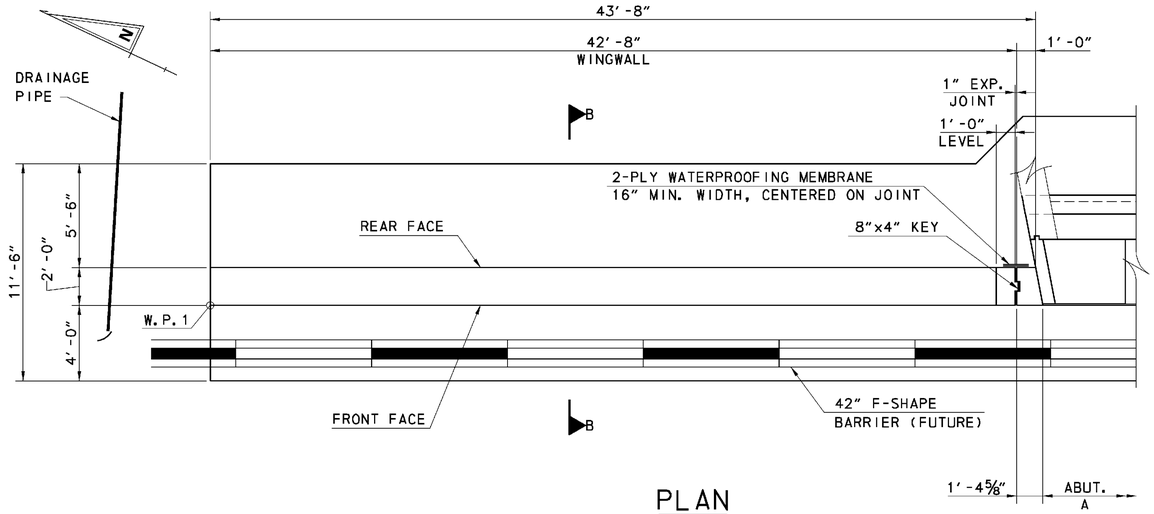

PLAN

SCALE: 1/4"=1'-0"

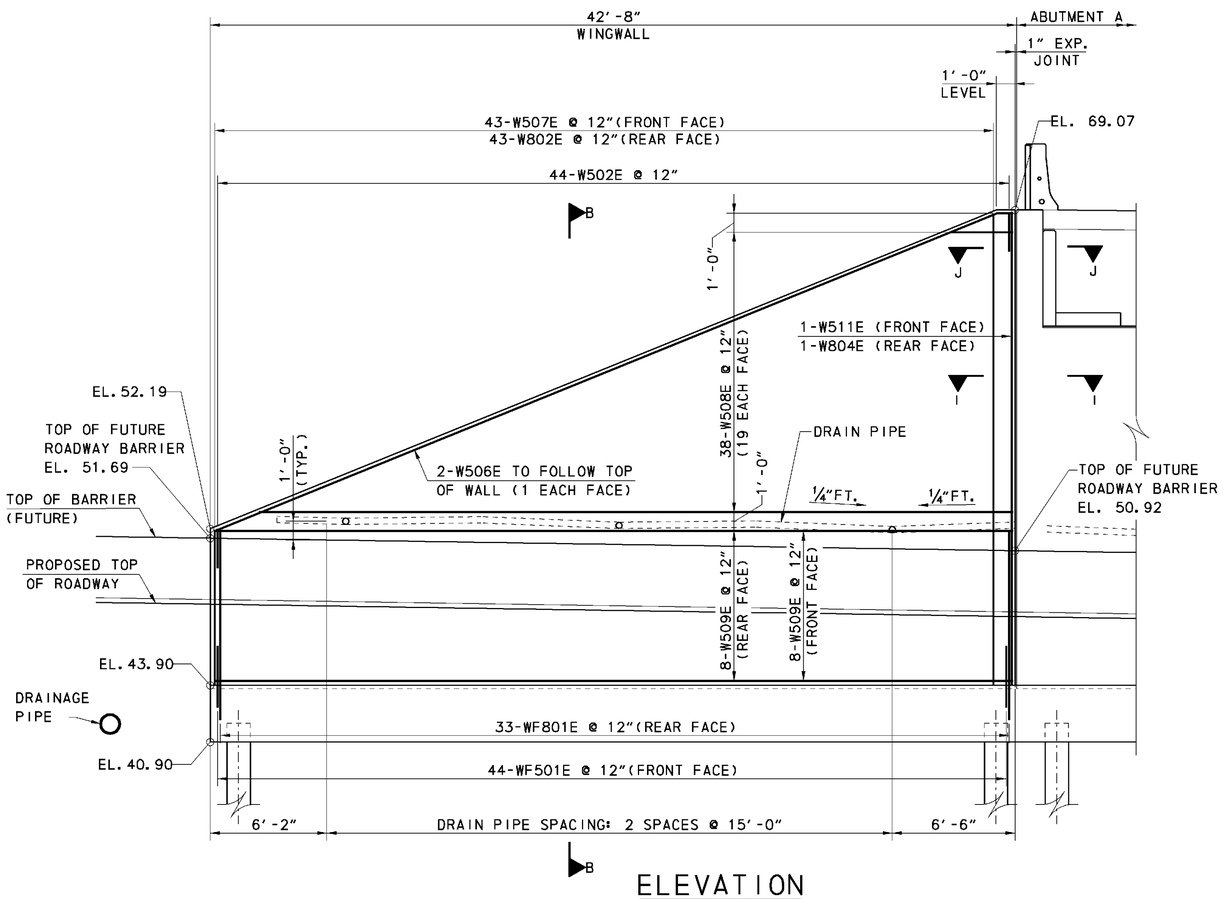

ELEVATION

SCALE: 1/4"=1'-0"

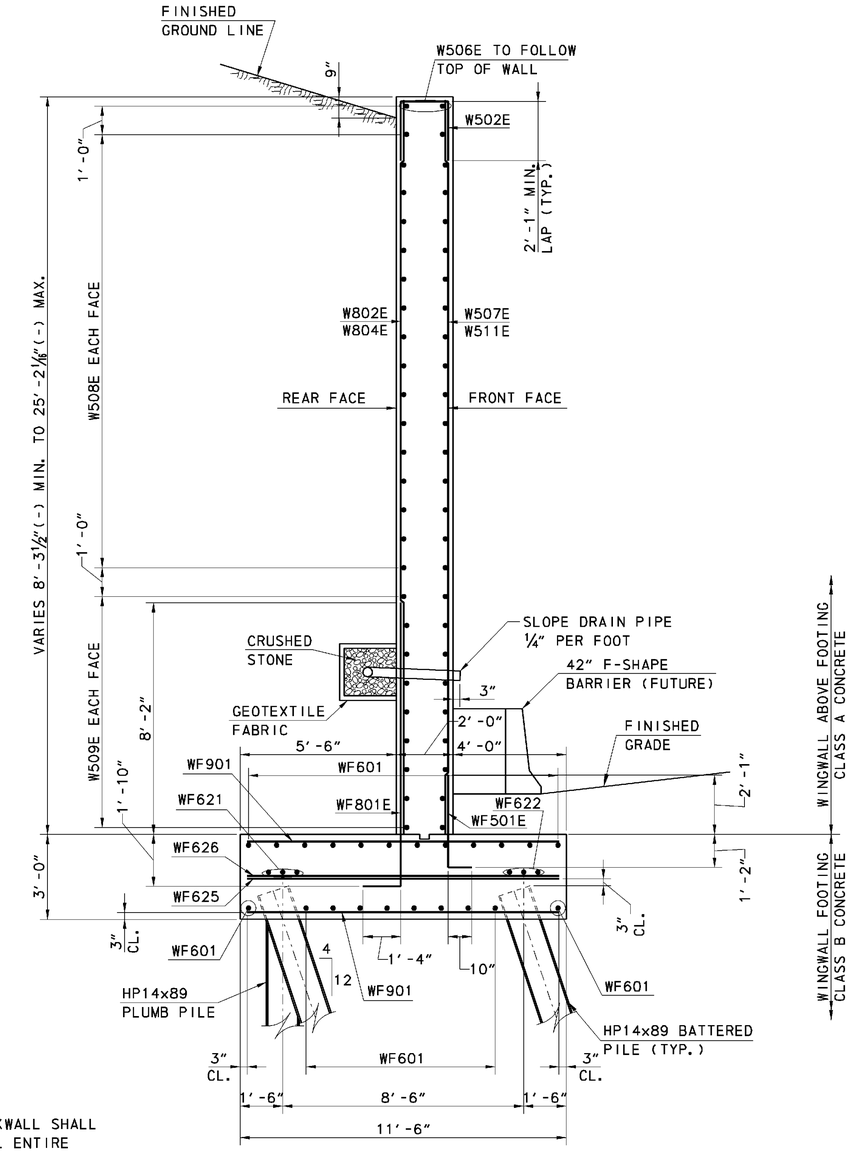

SECTION B-B

SCALE: 3/8"=1'-0"

NOTES:

1. TOP PORTION OF BACKWALL SHALL NOT BE PLACED UNTIL ENTIRE BRIDGE DECK SLAB IS COMPLETE IN PLACE.
2. DRAIN PIPE SHALL CONFORM TO THE REQUIREMENTS OF SECTION 715 OF THE SPECIFICATIONS.
3. CRUSHED STONE SHALL CONFORM TO THE REQUIREMENTS OF SECTION 813 OF THE SPECIFICATIONS.

CROSS REFERENCE NOTES:

1. FOR FOOTING REINFORCING, SEE SHEET S7-6.
2. FOR SECTIONS I-I AND J-J, SEE SHEET S7-10.
3. FOR STEM EXPANSION JOINT DETAILS, SEE SHEET S7-13.
4. FOR WATERPROOFING MEMBRANE NOTES, SEE GENERAL NOTES, SHEET S7-2.

0 2 8
1 4
SCALE: 1/4"=1'-0"

0 2 8
1 4
SCALE: 3/8"=1'-0"

9/27/2010 7:48:29 AM
M:\PROJECTS\2003\03059_DELTRNPK\SR1MALL\CADD\3009004\PLANS\WW02_BR-S7_RAMPR1.DGN

DELAWARE DEPARTMENT OF TRANSPORTATION	ADDENDUMS / REVISIONS	SR1/I-95 INTERCHANGE - CHRISTIANA MALL ROAD BRIDGE	CONTRACT T201009004	BRIDGE NO. 1-223	RAMP R1 OVER SR7 WINGWALL II PLAN, ELEVATION & DETAILS	S7-15
			COUNTY NEW CASTLE	DESIGNED BY: JMS		SHEET NO. 50
				CHECKED BY: JSW		TOTAL SHTS. 164

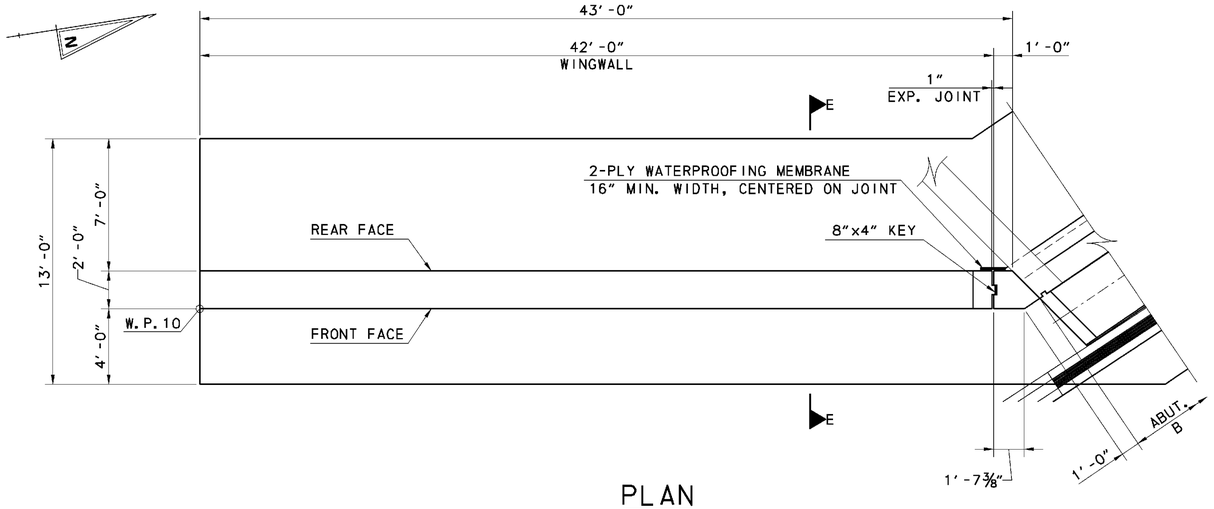

PLAN

SCALE: ¼"=1'-0"

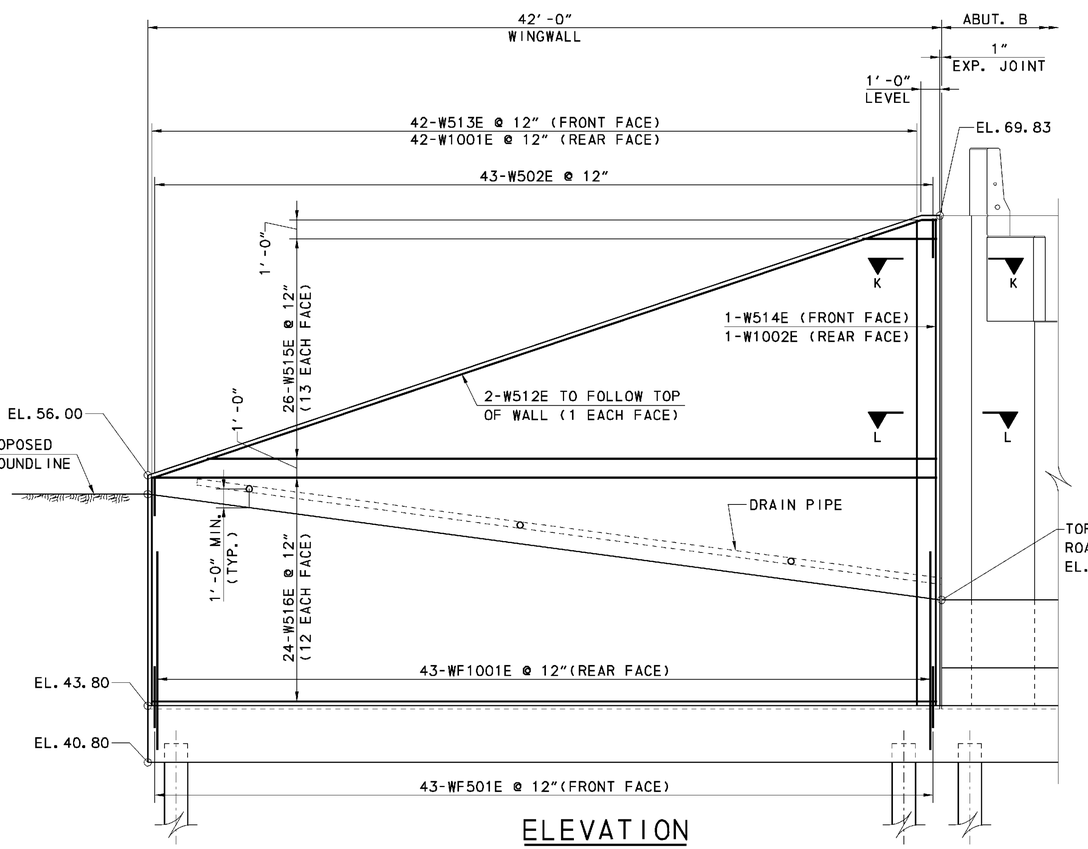

ELEVATION

SCALE: ¼"=1'-0"

NOTES:

1. TOP PORTION OF BACKWALL SHALL NOT BE PLACED UNTIL ENTIRE BRIDGE DECK SLAB IS COMPLETE IN PLACE.
2. DRAIN PIPE SHALL CONFORM TO THE REQUIREMENTS OF SECTION 715 OF THE SPECIFICATIONS.
3. CRUSHED STONE SHALL CONFORM TO THE REQUIREMENTS OF SECTION 813 OF THE SPECIFICATIONS.

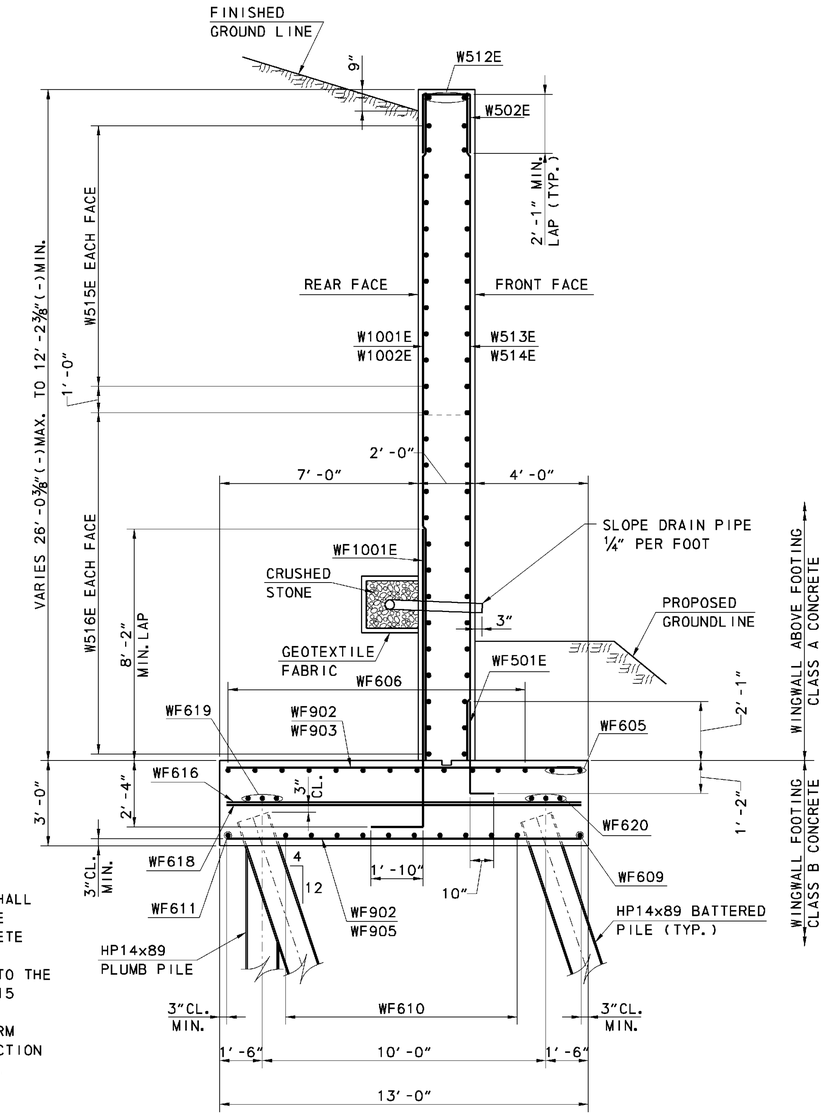

SECTION E-E

SCALE: ⅜"=1'-0"

CROSS REFERENCE NOTES:

1. FOR FOOTING REINFORCING, SEE SHEET S7-6.
2. FOR SECTIONS K-K AND L-L, SEE SHEET S7-12.
3. FOR STEM EXPANSION JOINT DETAILS, SEE SHEET S7-13.
4. FOR CONDUIT DETAILS, SEE LIGHTING PLANS.
5. FOR WATERPROOFING MEMBRANE NOTES, SEE GENERAL NOTES, SHEET S7-2.

0 2 8
1 4
SCALE: ¼"=1'-0"

0 2 8
1 4
SCALE: ⅜"=1'-0"

9/24/2010 1:51:14 PM
M:\PROJECTS\2003\03059_DELTRNPK\SRIMALL\CADD\3009004\PLANS\WW03_BR-S7_RAMPR1.DGN

DELAWARE DEPARTMENT OF TRANSPORTATION	ADDENDUMS / REVISIONS	SR1/I-95 INTERCHANGE - CHRISTIANA MALL ROAD BRIDGE	CONTRACT T201009004	BRIDGE NO. 1-223	RAMP R1 OVER SR7 WINGWALL III PLAN, ELEVATION & DETAILS	S7-16
			COUNTY NEW CASTLE	DESIGNED BY: JMS		SHEET NO. 51
				CHECKED BY: JSW		TOTAL SHTS. 164

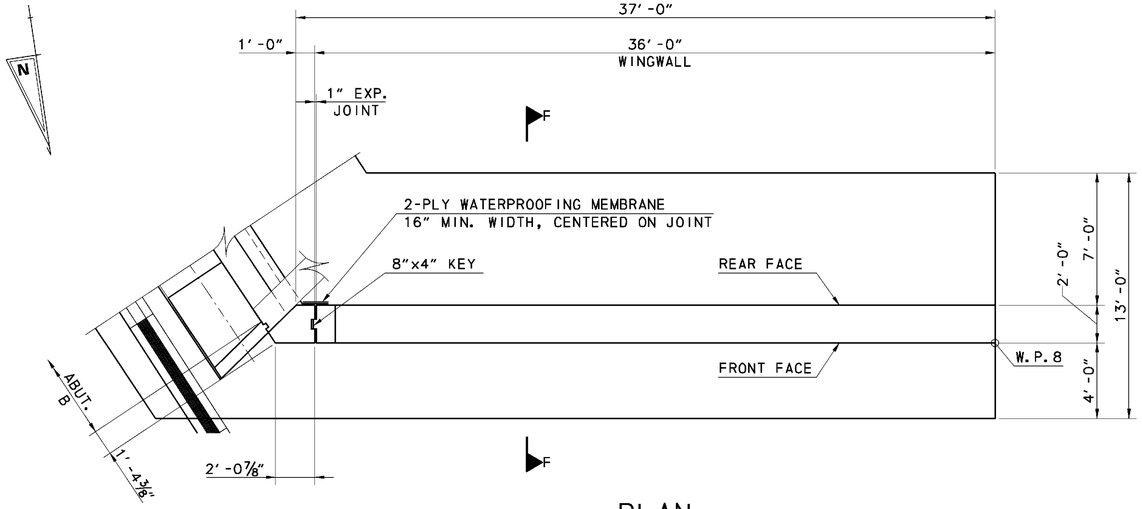

PLAN

SCALE: 1/4"=1'-0"

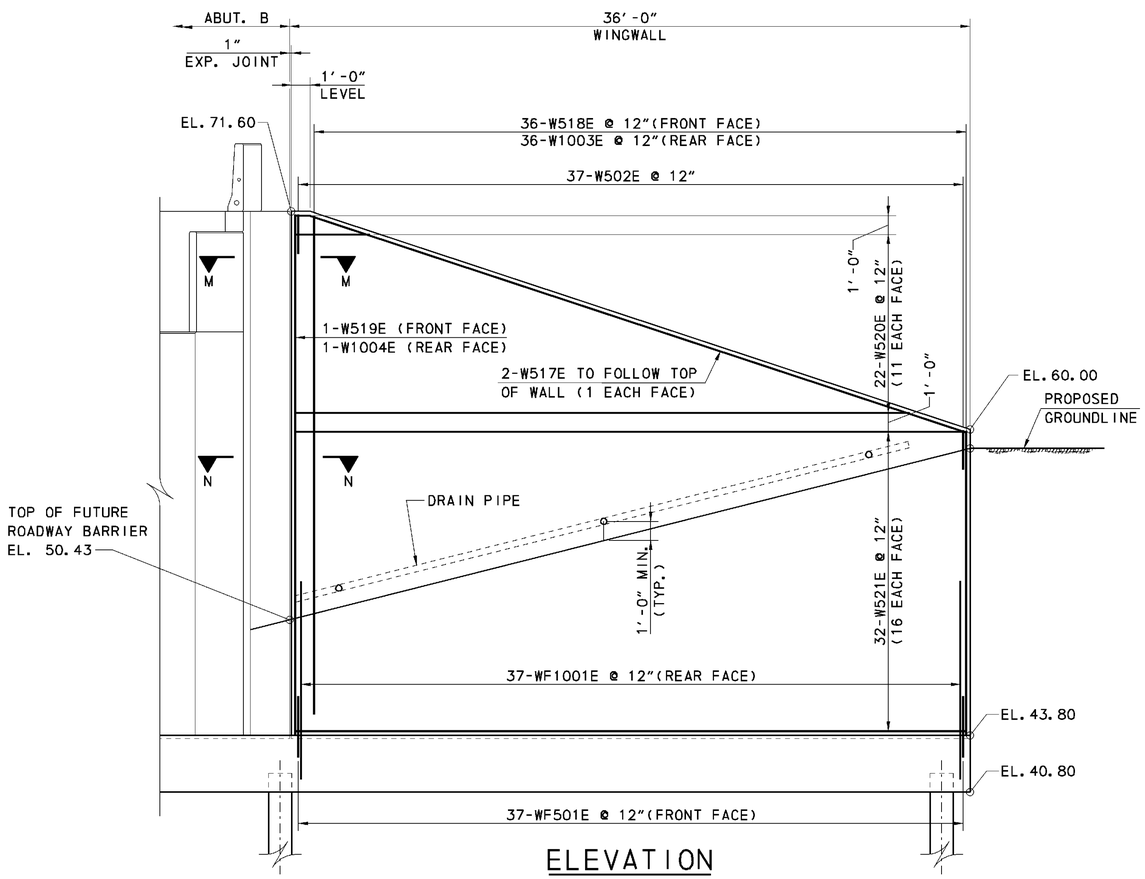

ELEVATION

SCALE: 1/4"=1'-0"

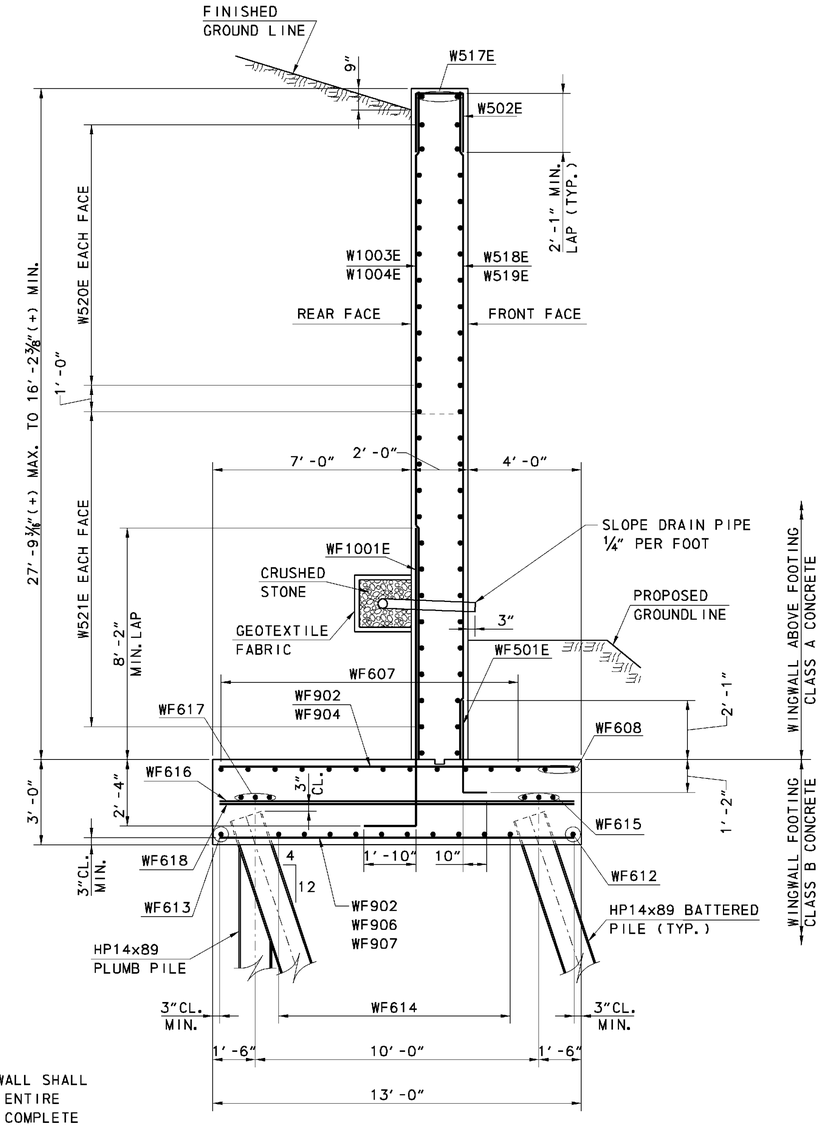

SECTION F-F

SCALE: 3/8"=1'-0"

NOTES:

1. TOP PORTION OF BACKWALL SHALL NOT BE PLACED UNTIL ENTIRE BRIDGE DECK SLAB IS COMPLETE IN PLACE.
2. DRAIN PIPE SHALL CONFORM TO THE REQUIREMENTS OF SECTION 715 OF THE SPECIFICATIONS.
3. CRUSHED STONE SHALL CONFORM TO THE REQUIREMENTS OF SECTION 813 OF THE SPECIFICATIONS.

CROSS REFERENCE NOTES:

1. FOR FOOTING REINFORCING, SEE SHEET S7-6.
2. FOR SECTIONS M-M AND N-N, SEE SHEET S7-12.
3. FOR STEM EXPANSION JOINT DETAILS, SEE SHEET S7-13.
4. FOR WATERPROOFING MEMBRANE NOTES, SEE GENERAL NOTES, SHEET S7-2.

0 2 8
1 4
SCALE: 1/4"=1'-0"

0 2 8
1 4
SCALE: 3/8"=1'-0"

9/27/2010 7:54:27 AM
M:\PROJECTS\2003\03059_DELTRNPK\SR1MALL\CADD\3009004\PLANS\WW04_BR-S7_RAMPR1.DGN

DELAWARE DEPARTMENT OF TRANSPORTATION	ADDENDUMS / REVISIONS	SR1/I-95 INTERCHANGE - CHRISTIANA MALL ROAD BRIDGE	CONTRACT T201009004	BRIDGE NO. 1-223	RAMP R1 OVER SR7 WINGWALL IV PLAN, ELEVATION & DETAILS	S7-17
			COUNTY NEW CASTLE	DESIGNED BY: JMS		SHEET NO. 52
				CHECKED BY: JSW		TOTAL SHTS. 164

(1) ANY MARK NUMBER WITH SUFFIX 'E' DENOTES EPOXY-COATED REINFORCING STEEL.

(2) BAR MARK PREFIXES INDICATE THE FOLLOWING:

A = ABUTMENT STEM, BACKWALL, CHEEKWALL, PEDESTALS

AF = ABUTMENT FOOTING

W = WINGWALL STEM

WF = WINGWALL FOOTING

NOTE A:
BENDING DIMENSION STOPS AT DECK. BAR LENGTH MUST BE INCREASED ONCE THREADED INSERT DEPTH IS KNOWN.

ABUTMENT A

SPECIFICATIONS					BENDING DIMENSIONS (FT-INCHES)											
QTY.	SIZE	LENGTH	MARK	TYPE	A	B	C	D	E	F/R	G	H	J	K	O	
76	5	5-4	A503E	16	0	2-0	0-6	0				2-0		2-0		
4	5	7-3 5/8	A520E	T15	0	2-8	0-8	2-11 3/8	0	1-0		0	1-3	2-8	2-11 5/16	
6	5	38-9 3/16	A521E	STR												
2	5	36-9 5/16	A522E	STR												
26	5	37-10 5/16	A523E	STR												
4	5	3-1 *	A524E	17			2-10	0-3 *								* SEE NOTE A
76	5	14-2	A525E	17		8-2	1-0	5-0								
8	5	8-0	A526E	STR												
7	5	38-10 5/16	A528E	STR												
7	5	38-6 5/16	A529E	2	1-9	36-9 5/16										
76	5	7-3	A530E	2	2-1	5-2										
7	5	5-9	A532E	16	0	0	1-4 1/4	4-4 13/16	0		0	4-4 3/16		1-5 1/8		
7	5	6-3	A533E	T4	0	0	1-9	4-7	0		0	3-5 7/8		3-5 1/4		
7	5	2-10 3/16	A534E	16	0	0	1-3	1-7 5/16				1-7 1/4		0-6		
7	5	3-0	A535E	T4	0	0	1-8 1/8	1-4	0		0	1-11		1-3 9/16		
32	5	5-11	A547E	17		1-5	3-1	1-5								
32	5	5-6	A551E	17		1-5	2-8	1-5								
78	6	38-8 3/4	A606E	STR												
42	6	18-2 7/8	A607E	STR												
42	6	18-8 1/4	A608E	STR												
1	6	24-9 1/4	A609E	STR												
1	6	23-11	A610E	STR												
20	6	4-8	A613E	16	0	0	1-3 3/8	3-4 9/16				3-4 1/8		1-0 1/8		
20	6	4-8 1/2	A614E	T4	0	0	3-4 9/16	1-4	0		0	2-11 3/16		2-7 9/16		
76	7	6-7	A701E	STR												
38	7	18-8 1/4	A702E	STR												
38	7	18-2 7/8	A703E	STR												
1	7	24-9 1/4	A704E	STR												
1	7	23-11	A705E	STR												
6	6	38-11 1/8	AF605	STR												
3	6	57-3 13/16	AF606	STR												
27	6	14-0 13/16	AF607	STR												
27	6	13-6	AF608	STR												
44	6	41-3 7/16	AF609	STR												
6	6	41-1 3/16	AF610	STR												
2	6	39-3 3/4	AF611	STR												
2	6	35-11 5/16	AF612	STR												
78	6	5-0	AF613E	2	1-0	4-0					0					
78	7	11-10	AF701E	2	1-2	10-8					0					
6	9	VARIES	AF904	STR												VARIES FROM 11-5 7/8 TO 12-10 BY 0-8 1/8
213	9	13-6	AF905	STR												
2	9	VARIES	AF907	STR												VARIES FROM 12-10 TO 13-4 BY 0-6
4	9	VARIES	AF908	STR												VARIES FROM 11-0 1/8 TO 13-1 1/2 BY 0-8 7/8
2	5	51-11 3/4	W501E	16	0	0	0-8	51-3 3/4				18-3 3/8		47-10		
94	5	5-10	W502E	17		2-1	1-8	2-1								
38	5	VARIES	W503E	STR												VARIES FROM 3-4 7/8 TO 46-1 5/16 BY 1-1 7/8
49	5	VARIES	W504E	STR												VARIES FROM 4-6 TO 23-10 7/8 BY 0-4 7/8
14	5	48-8	W505E	STR												
2	5	45-4	W506E	16	0	0	0-8	44-8				16-6 9/16		41-4		
43	5	VARIES	W507E	STR												VARIES FROM 7-11 1/2 TO 24-10 BY 0-4 13/16
38	5	VARIES	W508E	STR												VARIES FROM 3-3 1/2 TO 39-10 5/8 BY 0-11 7/8
16	5	42-4	W509E	STR												
1	5	14-2 7/16	W510E	STR												
1	5	24-10	W511E	STR												
49	8	VARIES	W801E	STR												VARIES FROM 4-6 TO 23-10 7/8 BY 0-4 7/8
43	8	VARIES	W802E	STR												VARIES FROM 7-11 1/2 TO 24-10 BY 0-4 13/16
1	8	14-2 7/16	W803E	STR												
1	8	24-10	W804E	STR												
94	5	4-1	WF501E	2	0-10	3-4										
22	6	43-3 1/2	WF601	STR												
22	6	50-4	WF602	STR												
3	6	33-0	WF621	STR												
3	6	60-0	WF622	STR												
3	6	42-6	WF623	STR												
3	6	50-3 5/16	WF624	STR												
33	6	11-2	WF625	STR												
33	6	12-2	WF626	STR												
71	8	11-4	WF801E	2	1-4	10-0										
197	9	11-0	WF901	STR												

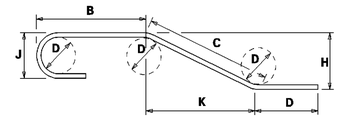

NOTES:
1. FIGURES SHOWN IN CIRCLES REPRESENT BAR BEND TYPES.
2. STANDARD BAR BENDS INCLUDE ONLY TYPES 1-32, S1-S12, AND T1-T16.
3. ALL DIMENSIONS ARE OUT-TO-OUT OF BAR EXCEPT "A" AND "G" ON STANDARD 180° AND 135° HOOKS.
4. "J" DIMENSIONS ON 180° HOOKS TO BE SHOWN ONLY WHERE NECESSARY TO RESTRICT HOOK SIZE, OTHERWISE STANDARD HOOKS ARE TO BE USED.
5. WHERE "J" IS NOT SHOWN, "J" WILL BE KEPT EQUAL TO OR LESS THAN "H" ON TRUSS BARS. WHERE "J" CAN EXCEED "H", IT SHALL BE SHOWN.
6. "H" DIMENSIONS OF STIRRUPS TO BE SHOWN WHERE NECESSARY TO FIT WITHIN THE CONCRETE.
7. UNLESS OTHERWISE NOTED, DIAMETER "D" IS THE SAME FOR ALL BENDS AND HOOKS ON A BAR.
8. WHERE SLOPE DIFFERS FROM 45° OFFSET, "H" AND "K" MUST BE SHOWN.
9. WHERE BARS ARE TO BE BENT MORE ACCURATELY THAN STANDARD BENDING TOLERANCES, BENDING DIMENSIONS WHICH REQUIRE CLOSER FABRICATION SHOULD HAVE LIMITS INDICATED.
10. FOR RECOMMENDED DIAMETER "D", OF BENDS, HOOKS, ETC., REFER TO TABLE AT RIGHT, 'CRSI' OR 'ACI' TABLES.
11. TYPE S1-S12, T1-T16 APPLY TO BAR SIZES 3 THROUGH 6.

ASTM STANDARD ENGLISH REINFORCING BARS				RECOMMENDED END HOOKS, APPLICABLE TO ALL GRADES			
NOMINAL DIMENSIONS					180° HOOKS		90° HOOKS
BAR SIZE	DIAMETER (inches)	AREA (inches²)	WEIGHT (lbs./ft.)	D	A OR G	J	A OR G
3	0.375	0.110	0.376	2½"	5"	3"	6"
4	0.500	0.200	0.668	3"	6"	4"	8"
5	0.625	0.310	1.043	3½"	7"	5"	10"
6	0.750	0.440	1.502	4½"	8"	6"	1'-0"
7	0.875	0.600	2.044	5½"	10"	7"	1'-2"
8	1.000	0.790	2.670	6"	11"	8"	1'-4"
9	1.128	1.000	3.400	9½"	1'-3"	11½"	1'-7"
10	1.270	1.270	4.303	10½"	1'-5"	1'-1½"	1'-10"
11	1.410	1.560	5.313	1'-0"	1'-7"	1'-2½"	2'-0"
14	1.693	2.250	7.650	1'-6½"	2'-3"	1'-9½"	2'-7"
18	2.257	4.000	13.600	2'-0"	3'-0"	2'-4½"	3'-5"

STANDARD BAR BENDS

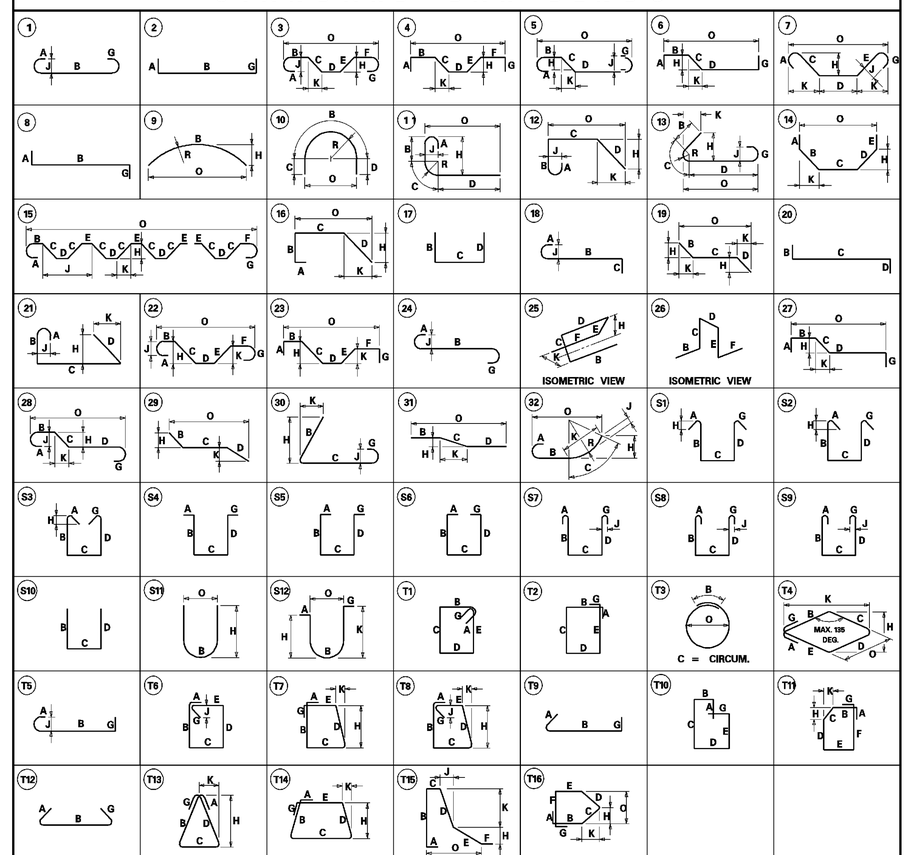

SPECIAL BAR BENDS

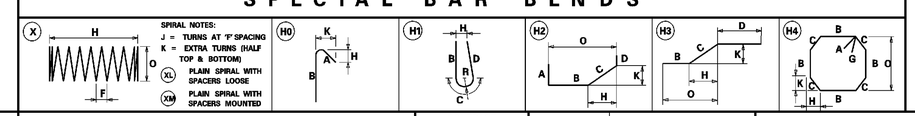

DELAWARE
DEPARTMENT OF TRANSPORTATION

ADDENDUMS / REVISIONS

SR1/I-95 INTERCHANGE - CHRISTIANA MALL ROAD BRIDGE

CONTRACT	BRIDGE NO.	1-223
T201009004	DESIGNED BY:	JMS
COUNTY	CHECKED BY:	JSW
NEW CASTLE		

RAMP R1 OVER SR7
REINFORCING BAR LIST
ABUTMENT A

SHEET NO.
S7-18
53
TOTAL SHTS.
164

8/19/2010 12:07:56 PM
M:\PROJECTS\2003\03059_DELTRNPK\SRIMALL\CADD\3009004\PLANS\BRD1_BR-S7_RAMPR1.DGN

(1) ANY MARK NUMBER WITH SUFFIX 'E' DENOTES EPOXY-COATED REINFORCING STEEL.

(2) BAR MARK PREFIXES INDICATE THE FOLLOWING:

A = ABUTMENT STEM, BACKWALL, CHEEKWALL, PEDESTALS
AF = ABUTMENT FOOTING
W = WINGWALL STEM
WF = WINGWALL FOOTING

NOTE A:
BENDING DIMENSION STOPS AT DECK. BAR LENGTH MUST BE INCREASED ONCE THREADED INSERT DEPTH IS KNOWN.

ABUTMENT B

SPECIFICATIONS					BENDING DIMENSIONS (FT-INCHES)											
QTY.	SIZE	LENGTH	MARK	TYPE	A	B	C	D	E	F/R	G	H	J	K	O	
76	5	14-1	A501E	17		8-1	1-0	5-0								
22	5	38-0 1/2	A502E	STR												
76	5	5-4	A503E	16	0	2-0	0-6	2-10				2-0		2-0		
4	5	7-3 5/8	A520E	T15	0	2-8	0-8	2-11 3/8	0	1-0		0	1-3	2-8	2-11 5/16	
6	5	38-9 3/16	A521E	STR												
4	5	3-1 *	A524E	17			2-10	0-3 *								* SEE NOTE A
8	5	8-0	A526E	STR												
7	5	5-10 9/16	A527E	16	0	0	1-9 7/16	4-1 3/16				2-10 7/16		2-11 1/4		
76	5	7-3	A530E	2	2-1	5-2										
7	5	6-1	A531E	16	0	0	1-10 3/4	4-2 5/16				2-11 5/8		2-11 5/8		
7	5	37-10 3/16	A536E	STR												
7	5	58-1	A537E	2	1-7	56-6					0					
7	5	38-9	A538E	2	1-7	37-2 1/8										
7	5	18-9 1/4	A539E	2	1-7	17-2 1/4										
2	5	36-5	A540E	STR												
32	5	5-11	A547E	17		1-5	3-1	1-5								
32	5	5-6	A551E	17		1-5	2-8	1-5								
82	6	38-0 1/4	A601E	STR												
18	6	19-11 5/8	A602E	STR												
20	6	20-5 3/8	A603E	STR												
20	6	20-11 3/8	A604E	STR												
18	6	21-5 1/8	A605E	STR												
5	6	25-8 3/8	A611E	STR												
5	6	27-5 5/8	A612E	STR												
18	6	3-1 3/8	A615E	16	0	0	1-4 7/8	1-8 9/16				1-5 1/8		0-11		
18	6	3-1 7/8	A616E	16	0	0	1-3 1/4	1-10 5/8				1-0 11/16		1-7 5/16		
76	9	8-8	A901E	STR												
18	9	19-11 5/8	A902E	STR												
20	9	20-5 3/8	A903E	STR												
20	9	20-11 3/8	A904E	STR												
18	9	21-5 1/8	A905E	STR												
6	6	28-9 3/16	AF601	STR												
12	6	34-10 5/16	AF602	STR												
42	6	7-6 13/16	AF603	STR												
15	6	16-0	AF604	STR												
76	6	5-0	AF613	2	1-0	4-0					0					
54	8	42-3 1/4	AF801	STR												
155	8	16-0	AF802	STR												
12	8	37-8 3/4	AF803	STR												
4	8	VARIES	AF804	STR												VARIES FROM 4-5 TO 16-0 BY 3-6 5/16
2	8	38-9	AF805	STR												
30	8	39-0	AF806	STR												
18	8	40-0 7/8	AF807	STR												
2	8	37-8 3/4	AF808	STR												
76	9	12-8	AF901E	2	1-7	11-1					0					
80	5	5-10	W502E	17		2-1	1-8	2-1								
2	5	43-8 5/16	W512E	16	0	0	0-8	43-0 5/16				13-6		40-10		
42	5	VARIES	W513E	STR												VARIES FROM 11-10 3/8 TO 25-8 3/8 BY 0-4 1/16
1	5	25-8 3/8	W514E	STR												
26	5	VARIES	W515E	STR												VARIES FROM 3-11 3/16 TO 38-7 1/4 BY 1-4 5/8

CHART CONTINUED ON NEXT PAGE

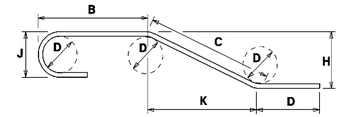

NOTES:
1. FIGURES SHOWN IN CIRCLES REPRESENT BAR BEND TYPES.
2. STANDARD BAR BENDS INCLUDE ONLY TYPES 1-32, S1-S12, AND T1-T16.
3. ALL DIMENSIONS ARE OUT-TO-OUT OF BAR EXCEPT "A" AND "G" ON STANDARD 180° AND 135° HOOKS.
4. "J" DIMENSIONS ON 180° HOOKS TO BE SHOWN ONLY WHERE NECESSARY TO RESTRICT HOOK SIZE, OTHERWISE STANDARD HOOKS ARE TO BE USED.
5. WHERE "J" IS NOT SHOWN, "J" WILL BE KEPT EQUAL TO OR LESS THAN "H" ON TRUSS BARS. WHERE "J" CAN EXCEED "H", IT SHALL BE SHOWN.
6. "H" DIMENSIONS OF STIRRUPS TO BE SHOWN WHERE NECESSARY TO FIT WITHIN THE CONCRETE.
7. UNLESS OTHERWISE NOTED, DIAMETER "D" IS THE SAME FOR ALL BENDS AND HOOKS ON A BAR.
8. WHERE SLOPE DIFFERS FROM 45° OFFSET, "H" AND "K" MUST BE SHOWN.
9. WHERE BARS ARE TO BE BENT MORE ACCURATELY THAN STANDARD BENDING TOLERANCES, BENDING DIMENSIONS WHICH REQUIRE CLOSER FABRICATION SHOULD HAVE LIMITS INDICATED.
10. FOR RECOMMENDED DIAMETER "D", OF BENDS, HOOKS, ETC., REFER TO TABLE AT RIGHT, 'CRSI' OR 'ACI' TABLES.
11. TYPE S1-S12, T1-T16 APPLY TO BAR SIZES 3 THROUGH 6.

ASTM STANDARD ENGLISH REINFORCING BARS				RECOMMENDED END HOOKS, APPLICABLE TO ALL GRADES			
NOMINAL DIMENSIONS					180° HOOKS		90° HOOKS
BAR SIZE	DIAMETER (inches)	AREA (inches²)	WEIGHT (lbs./ft.)	D	A OR G	J	A OR G
3	0.375	0.110	0.376	2"	5"	3"	6"
4	0.500	0.200	0.668	3"	6"	4"	8"
5	0.625	0.310	1.043	3"	7"	5"	10"
6	0.750	0.440	1.502	4"	8"	6"	1'-0"
7	0.875	0.600	2.044	5"	10"	7"	1'-2"
8	1.000	0.790	2.670	6"	11"	8"	1'-4"
9	1.128	1.000	3.400	9"	1'-3"	11"	1'-7"
10	1.270	1.270	4.303	10"	1'-5"	1'-1"	1'-10"
11	1.410	1.560	5.313	1'-0"	1'-7"	1'-2"	2'-0"
14	1.693	2.250	7.650	1'-6"	2'-3"	1'-9"	2'-7"
18	2.257	4.000	13.600	2'-0"	3'-0"	2'-4"	3'-5"

STANDARD BAR BENDS

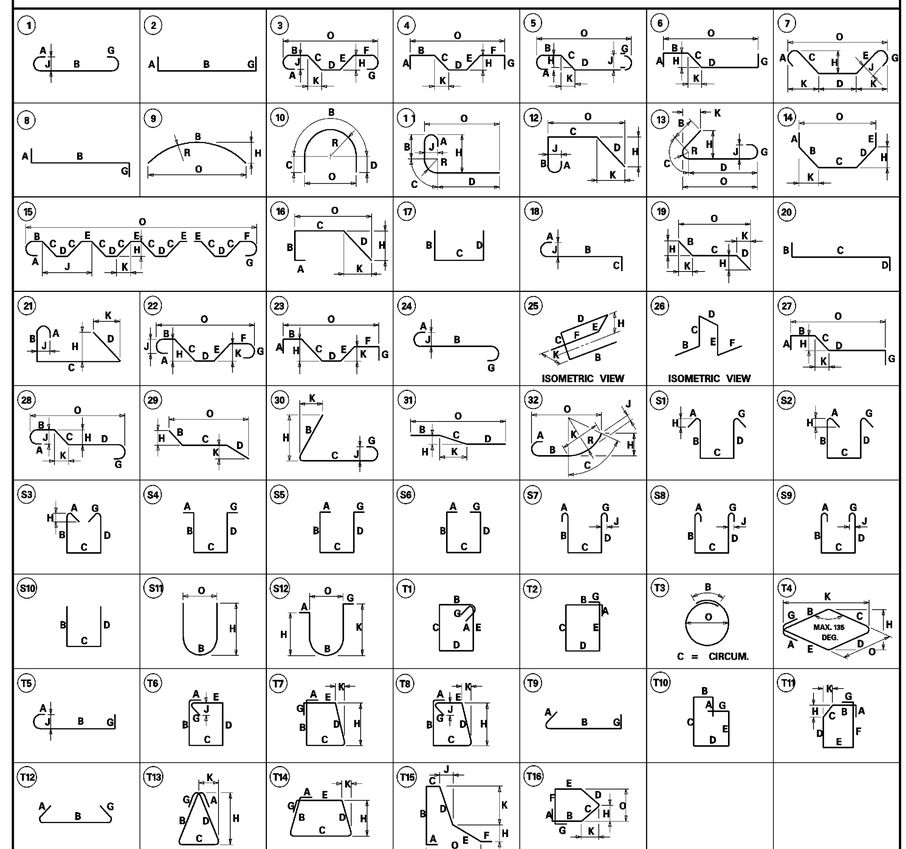

SPECIAL BAR BENDS

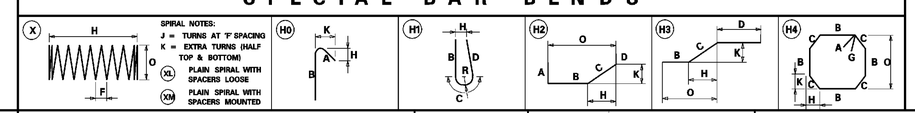

DELAWARE DEPARTMENT OF TRANSPORTATION

ADDENDUMS / REVISIONS

SR1/I-95 INTERCHANGE - CHRISTIANA MALL ROAD BRIDGE

CONTRACT	BRIDGE NO. 1-223
T201009004	DESIGNED BY: JMS
COUNTY	
NEW CASTLE	CHECKED BY: JSW

RAMP R1 OVER SR7 REINFORCING BAR LIST 1 ABUTMENT B

S7-19
SHEET NO. 54
TOTAL SHTS. 164

8/19/2010 12:14:57 PM
M:\PROJECTS\2003\03059_DELTRNPK\SRIMALL\CADD\3009004\PLANS\BR02_BR-S7_RAMPR1.DGN

(1) ANY MARK NUMBER WITH SUFFIX 'E' DENOTES EPOXY-COATED REINFORCING STEEL.

(2) BAR MARK PREFIXES INDICATE THE FOLLOWING:

A = ABUTMENT STEM, BACKWALL, CHEEKWALL, PEDESTALS
AF = ABUTMENT FOOTING
W = WINGWALL STEM
WF = WINGWALL FOOTING

ABUTMENT B

SPECIFICATIONS					BENDING DIMENSIONS (FT-INCHES)											
QTY.	SIZE	LENGTH	MARK	TYPE	A	B	C	D	E	F/R	G	H	J	K	O	
24	5	41-8	W516E	STR												
2	5	37-3 11/16	W517E	16	0	0	0-8	36-7 5/8				11-3 1/4		34-10		
36	5	VARIES	W518E	STR												VARIES FROM 15-8 TO 27-5 5/8 BY 0-4
1	5	27'-5 5/8	W519E	STR												
22	5	VARIES	W520E	STR												VARIES FROM 3-11 13/16 TO 32-6 11/16 BY 1-4 5/16
32	5	35-8	W521E	STR												
42	10	VARIES	W1001E	STR												VARIES FROM 11-10 3/8 TO 25-8 3/8 BY 0-4 1/16
1	10	25-8 3/8	W1002E	STR												
36	10	VARIES	W1003E	STR												VARIES FROM 15-8 TO 27-5 5/8 BY 0-4
1	10	27-5 5/8	W1004E	STR												
80	5	4-1	WF501E	2	0-10	3-4					0					
2	6	50-10 3/4	WF605	STR												
12	6	VARIES	WF606	STR												VARIES FROM 43-3 7/16 TO 50-10 3/4 BY 0-8 5/16
12	6	VARIES	WF607	STR												VARIES FROM 35-9 3/16 TO 44-1 3/16 BY 0-9
2	6	44-1 3/16	WF608	STR												
1	6	50-10 3/4	WF609	STR												
10	6	VARIES	WF610	STR												VARIES FROM 49-8 TO 44-6 1/8 BY 0-6 7/8
1	6	43-3 1/2	WF611	STR												
1	6	44-1 3/16	WF612	STR												
1	6	34-2 11/16	WF613	STR												
10	6	VARIES	WF614	STR												VARIES FROM 37-6 TO 44-10 1/8 BY 0-9 13/16
3	6	37-6	WF615	STR												
33	6	13-3	WF616	STR												
3	6	35-3 3/16	WF617	STR												
36	6	12-6	WF618	STR												
3	6	44-6	WF619	STR												
3	6	48-0	WF620	STR												
207	9	12-6	WF902	STR												
10	9	VARIES	WF903	STR												VARIES FROM 6-2 TO 13-2 BY 0-9 5/16
12	9	VARIES	WF904	STR												VARIES FROM 6-2 TO 14-0 3/16 BY 0-8 9/16
4	9	VARIES	WF905	STR												VARIES FROM 14-10 TO 16-0 6/16 BY 0-4 13/16
2	9	10-9 1/4	WF906	STR												
4	9	6-10	WF907	STR												
80	10	11-7	WF1001E	2	1-1	10-6					0					

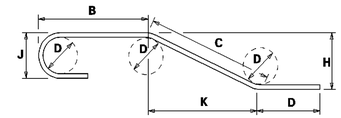

NOTES:
1. FIGURES SHOWN IN CIRCLES REPRESENT BAR BEND TYPES.
2. STANDARD BAR BENDS INCLUDE ONLY TYPES 1-32, S1-S12, AND T1-T16.
3. ALL DIMENSIONS ARE OUT-TO-OUT OF BAR EXCEPT "A" AND "G" ON STANDARD 180° AND 135° HOOKS.
4. "J" DIMENSIONS ON 180° HOOKS TO BE SHOWN ONLY WHERE NECESSARY TO RESTRICT HOOK SIZE, OTHERWISE STANDARD HOOKS ARE TO BE USED.
5. WHERE "J" IS NOT SHOWN, "J" WILL BE KEPT EQUAL TO OR LESS THAN "H" ON TRUSS BARS. WHERE "J" CAN EXCEED "H", IT SHALL BE SHOWN.
6. "H" DIMENSIONS OF STIRRUPS TO BE SHOWN WHERE NECESSARY TO FIT WITHIN THE CONCRETE.
7. UNLESS OTHERWISE NOTED, DIAMETER "D" IS THE SAME FOR ALL BENDS AND HOOKS ON A BAR.
8. WHERE SLOPE DIFFERS FROM 45° OFFSET, "H" AND "K" MUST BE SHOWN.
9. WHERE BARS ARE TO BE BENT MORE ACCURATELY THAN STANDARD BENDING TOLERANCES, BENDING DIMENSIONS WHICH REQUIRE CLOSER FABRICATION SHOULD HAVE LIMITS INDICATED.
10. FOR RECOMMENDED DIAMETER "D", OF BENDS, HOOKS, ETC., REFER TO TABLE AT RIGHT, 'CRSI' OR 'ACI' TABLES.
11. TYPE S1-S12, T1-T16 APPLY TO BAR SIZES 3 THROUGH 6.

ASTM STANDARD ENGLISH REINFORCING BARS				RECOMMENDED END HOOKS, APPLICABLE TO ALL GRADES			
	NOMINAL DIMENSIONS				180° HOOKS		90° HOOKS
BAR SIZE	DIAMETER (inches)	AREA (inches²)	WEIGHT (lbs./ft.)	D	A OR G	J	A OR G
3	0.375	0.110	0.376	2"	5"	3"	6"
4	0.500	0.200	0.668	3"	6"	4"	8"
5	0.625	0.310	1.043	3"	7"	5"	10"
6	0.750	0.440	1.502	4"	8"	6"	1'-0"
7	0.875	0.600	2.044	5"	10"	7"	1'-2"
8	1.000	0.790	2.670	6"	11"	8"	1'-4"
9	1.128	1.000	3.400	9"	1'-3"	11"	1'-7"
10	1.270	1.270	4.303	10"	1'-5"	1'-1"	1'-10"
11	1.410	1.560	5.313	1'-0"	1'-7"	1'-2"	2'-0"
14	1.693	2.250	7.650	1'-6"	2'-3"	1'-9"	2'-7"
18	2.257	4.000	13.600	2'-0"	3'-0"	2'-4"	3'-5"

STANDARD BAR BENDS

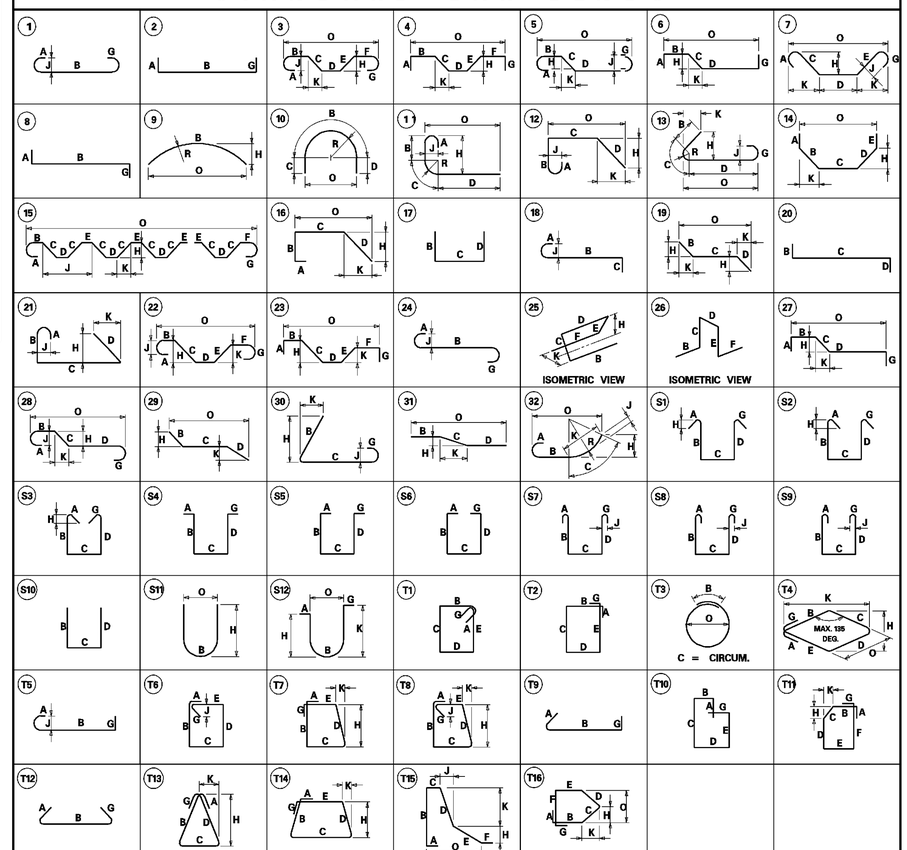

SPECIAL BAR BENDS

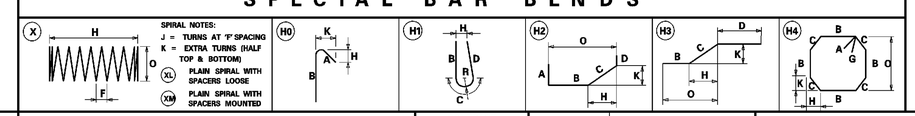

DELAWARE DEPARTMENT OF TRANSPORTATION

ADDENDUMS / REVISIONS

SR1/I-95 INTERCHANGE - CHRISTIANA MALL ROAD BRIDGE

CONTRACT	BRIDGE NO.	1-223
T201009004	DESIGNED BY:	JMS
COUNTY	CHECKED BY:	JSW
NEW CASTLE		

RAMP R1 OVER SR7 REINFORCING BAR LIST 2 ABUTMENT B

S7-20
SHEET NO.
55
TOTAL SHTS.
164

8/19/2010 12:14:24 PM
M:\PROJECTS\2003\03059_DELTRNPK\SRIMALL\CADD\3009004\PLANS\BR03_BR-S7_RAMPR1.DGN

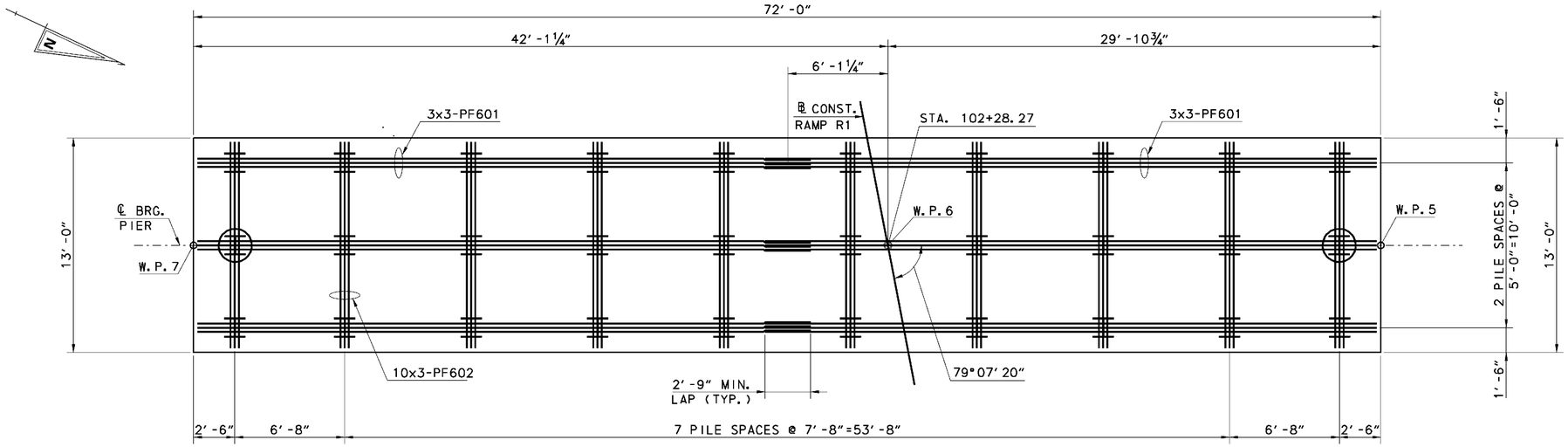

PILE PLAN - PIER

SCALE: ¼"=1'-0"

LEGEND

I DENOTES HP14x89 - PLUMB PILE

(I) DENOTES HP14x89 - TEST PILE

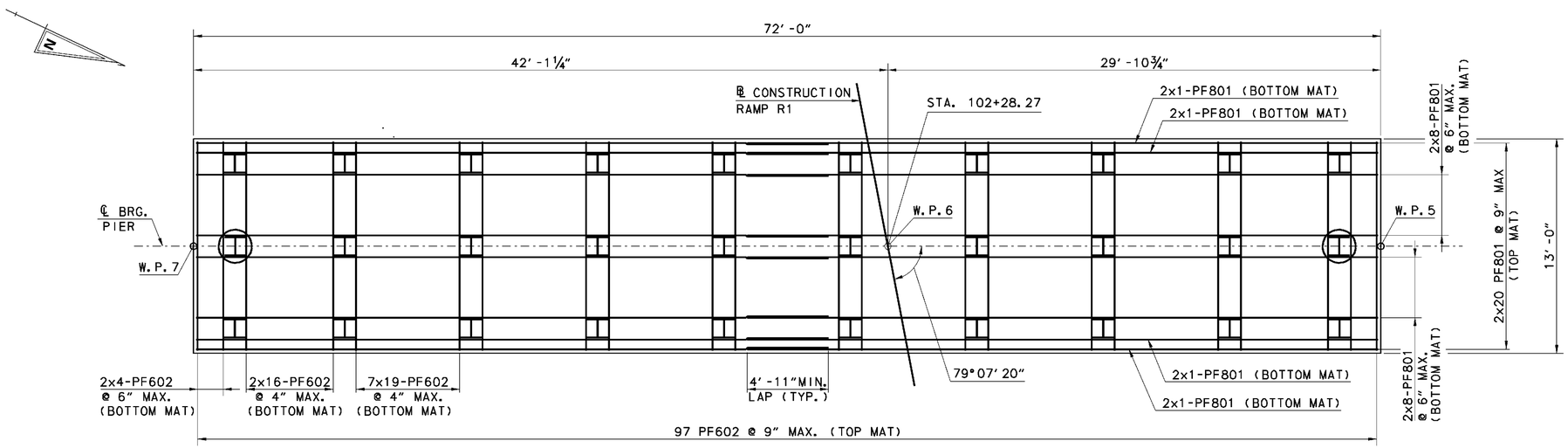

FOOTING REINFORCING

SCALE: ¼"=1'-0"

CROSS REFERENCE NOTES:

1. FOR WORK POINT LOCATIONS, SEE SHEET S7-4.
2. FOR PILE DRIVING DATA, SEE SHEET S7-3.
3. FOR PIER REINFORCING DETAILS, SEE SHEET S7-23.

0 2 8
1 4
SCALE: ¼"=1'-0"

8/19/2010 12:15:44 PM
M:\PROJECTS\2003\03059_DELTRNPK\SR1MALL\CADD\3009004\PLANS\PR03_BR-S7_RAMPR1.DGN

DELAWARE DEPARTMENT OF TRANSPORTATION	ADDENDUMS / REVISIONS		SR1/I-95 INTERCHANGE - CHRISTIANA MALL ROAD BRIDGE	CONTRACT T201009004	BRIDGE NO. 1-223	RAMP R1 OVER SR7 PIER PILE PLAN AND FOUNDATION REINFORCING	S7-21
				COUNTY NEW CASTLE	DESIGNED BY: ADM		SHEET NO. 56
					CHECKED BY: JSW		TOTAL SHTS. 164

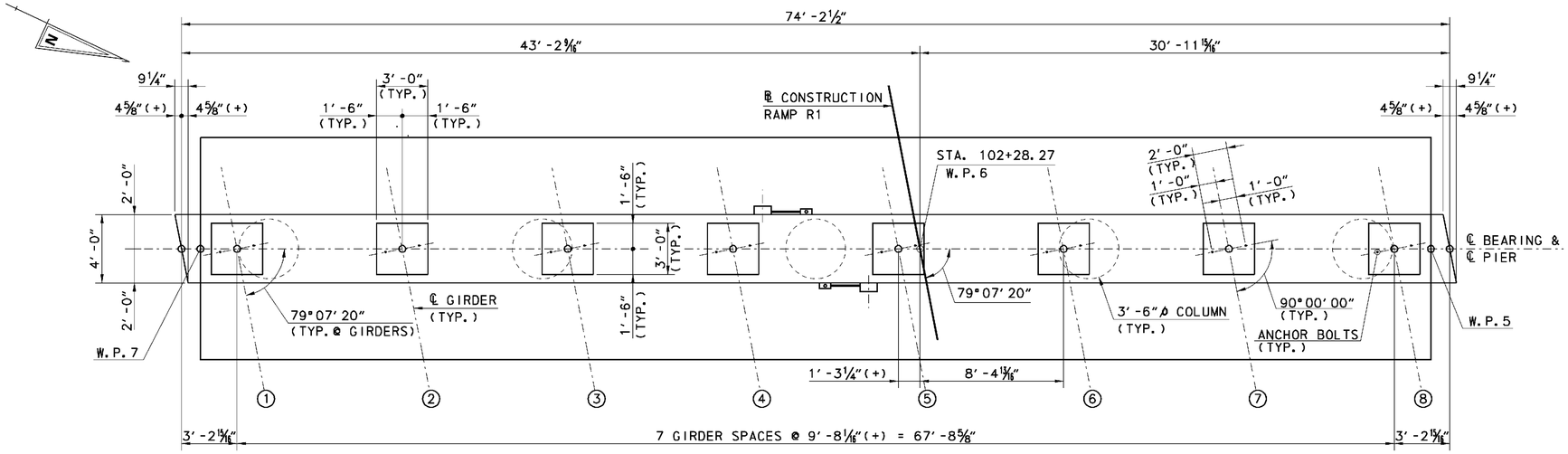

PLAN

SCALE: ¼"=1'-0"

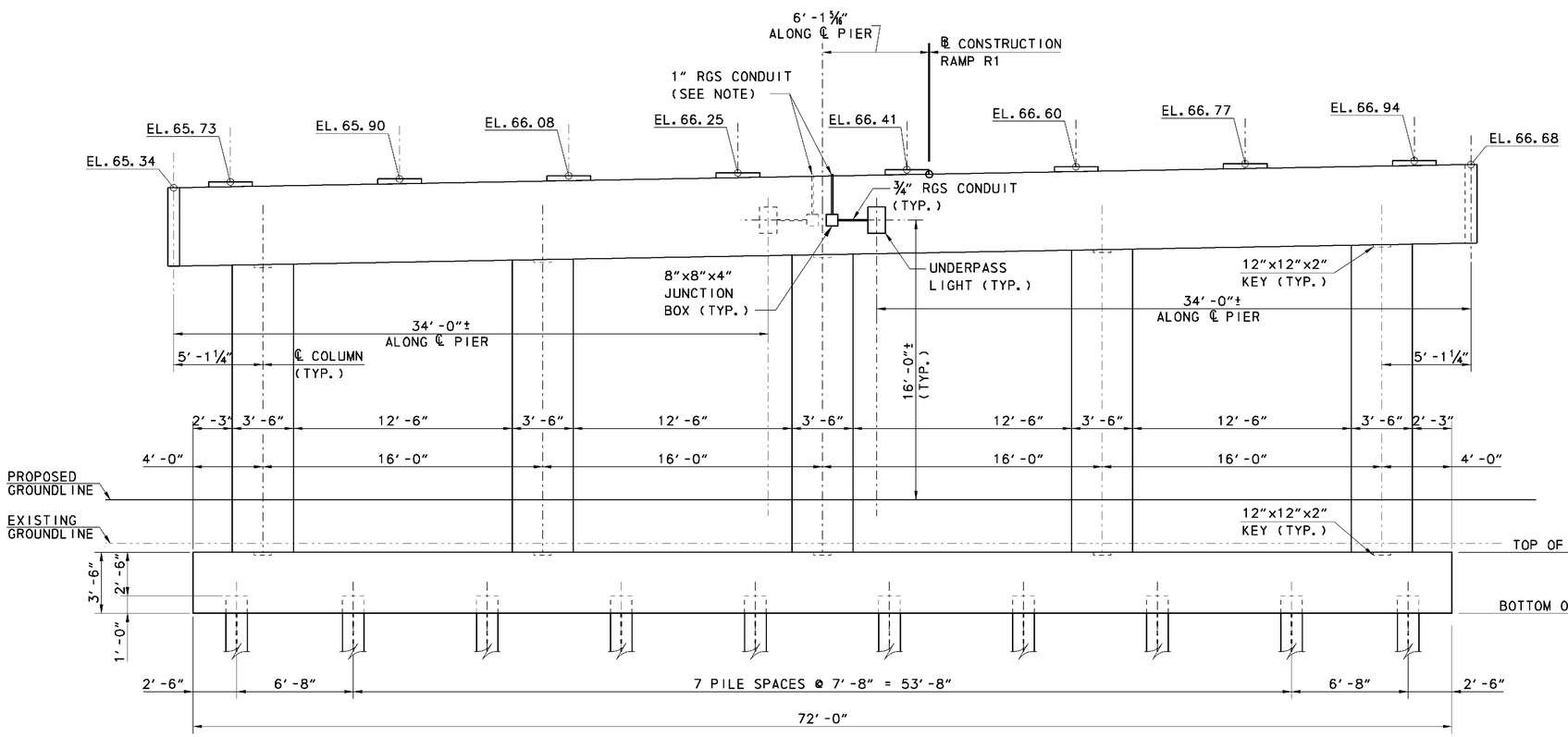

ELEVATION

SCALE: ¼"=1'-0"

NOTES:
1. EXTEND 1" RGS CONDUIT TO JUNCTION BOXES FROM GIRDER PER REQUIREMENTS IN THE SPECIAL PROVISIONS.
2. ATTACH JUNCTION BOX, LIGHTING AND CONDUIT PER MANUFACTURER'S RECOMMENDATIONS.

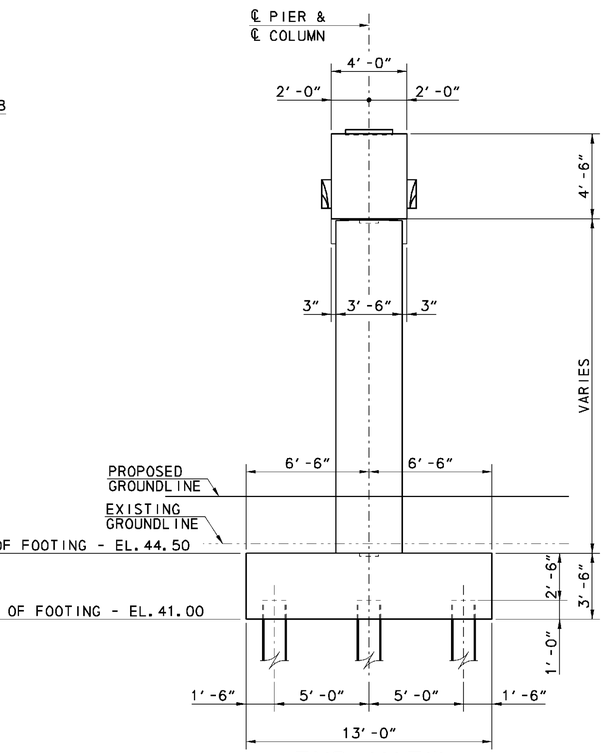

END VIEW

SCALE: ¼"=1'-0"

CROSS REFERENCE NOTES:
1. FOR REINFORCING, SEE SHEETS S7-21 AND S7-23.
2. FOR BEARING DETAILS, SEE SHEET S7-25.
3. FOR CONDUIT DETAILS, SEE LIGHTING PLANS.

0 2 8
1 4
SCALE: ¼"=1'-0"

9/24/2010 2:04:47 PM
M:\PROJECTS\2003\03059_DELTRNPK\SRIMALL\CADD\3009004\PLANS\PR01_BR-S7_RAMPR1.DGN

DELAWARE DEPARTMENT OF TRANSPORTATION	ADDENDUMS / REVISIONS	SR1/I-95 INTERCHANGE - CHRISTIANA MALL ROAD BRIDGE	CONTRACT T201009004	BRIDGE NO. 1-223	RAMP R1 OVER SR7 PIER PLAN & ELEVATION	S7-22 SHEET NO. 57
			COUNTY NEW CASTLE	DESIGNED BY: ADM		TOTAL SHTS. 164
				CHECKED BY: JSW		

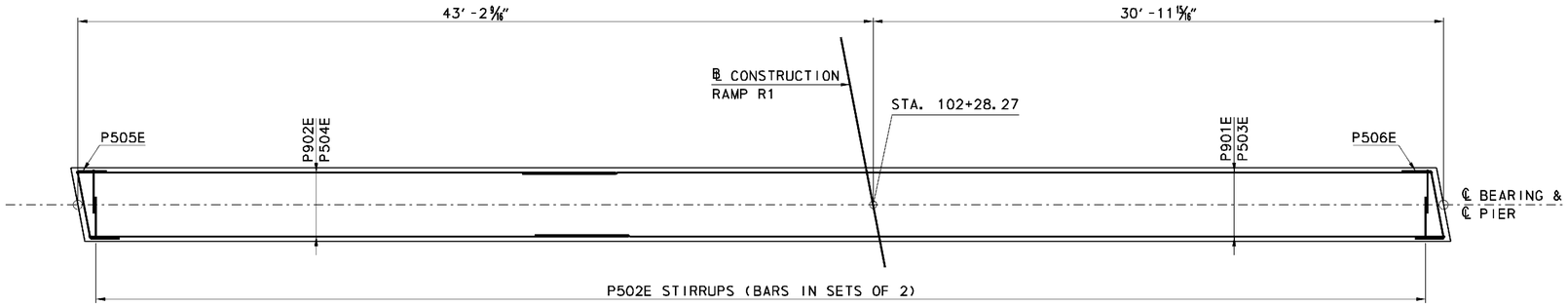

PIER CAP - PLAN

SCALE: 1/4"=1'-0"

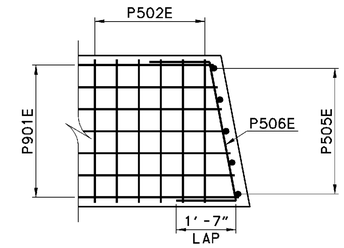

SECTION B-B

SCALE: 1/2"=1'-0"

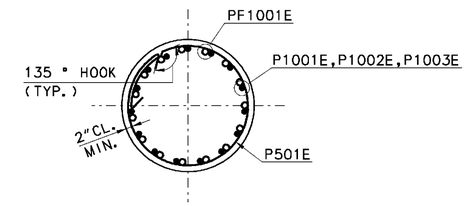

SECTION A-A

SCALE: 1/2"=1'-0"

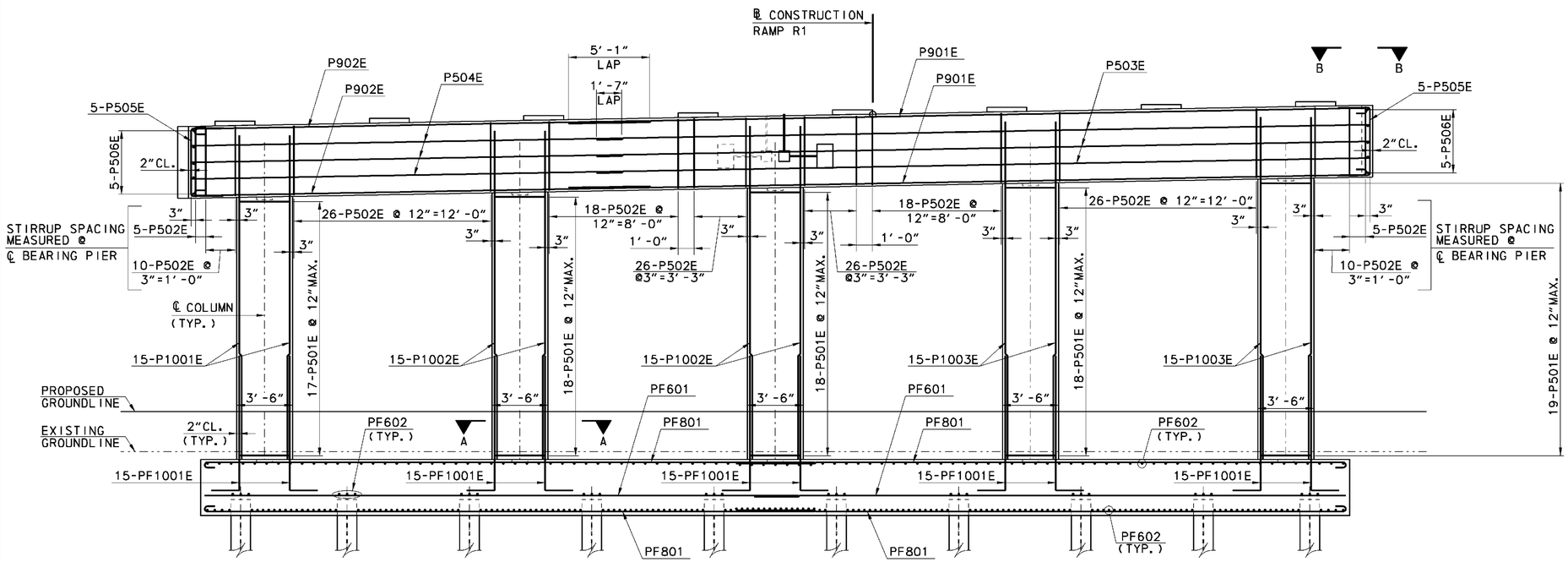

ELEVATION

SCALE: 1/4"=1'-0"

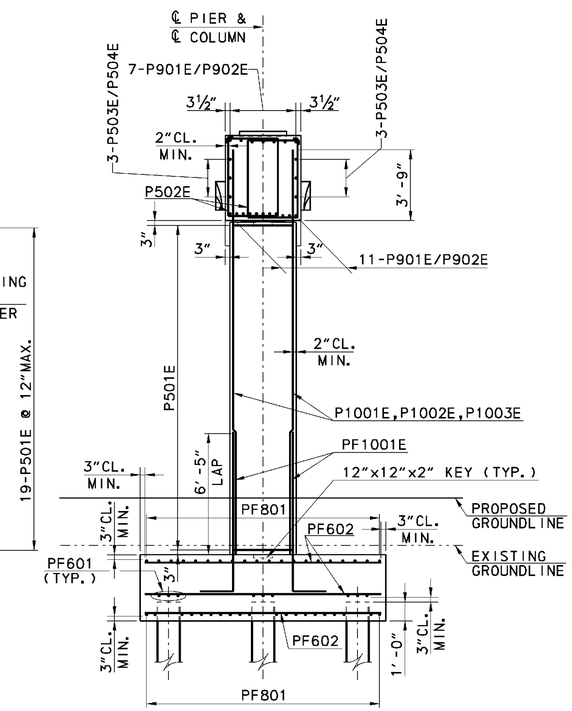

END VIEW

SCALE: 1/4"=1'-0"

CROSS REFERENCE NOTES:

1. FOR PILE DRIVING DATA SEE SHEET S7-3.
2. FOR PIER DIMENSIONS SEE SHEET S7-21.
3. FOR PEDESTAL REINFORCING DETAILS, SEE SHEET S7-13.
4. FOR PIER FOUNDATION REINFORCING, SEE SHEET S7-21.

0 2 8 / 1 4 SCALE: 1/4"=1'-0"

0 1 4 / 1/2 2 SCALE: 1/2"=1'-0"

9/27/2010 8:14:31 AM
M:\PROJECTS\2003\03059_DELTRNPK\SRTMALL\CADD\3009004\PLANS\PR02_BR-S7_RAMPR1.DGN

DELAWARE DEPARTMENT OF TRANSPORTATION	ADDENDUMS / REVISIONS	SR1/I-95 INTERCHANGE - CHRISTIANA MALL ROAD BRIDGE	CONTRACT T201009004	BRIDGE NO. 1-223	RAMP R1 OVER SR7 PIER REINFORCING DETAILS	S7-23	SHEET NO. 58
			COUNTY NEW CASTLE	DESIGNED BY: ADM			TOTAL SHTS. 164
				CHECKED BY: JSW			

(1) ANY MARK NUMBER WITH SUFFIX 'E' DENOTES EPOXY-COATED REINFORCING STEEL.

(2) BAR MARK PREFIXES INDICATE THE FOLLOWING:
P = PIER CAP, COLUMN, PEDESTALS
PF = PIER FOOTING

	SPECIFICATIONS					BENDING DIMENSIONS (FT-INCHES)										
	QTY.	SIZE	LENGTH	MARK	TYPE	A	B	C	D	E	F/R	G	H	J	K	O
PIER	90	5	12-10 3/8	P501E	T17	0-4 1/2	2-2	9-11 3/8				0-4 1/2				3-2
	170	5	16-0	P502E	T2	0-10	3-0	4-2	3-0	4-2		0-10				
	6	5	49-2 1/4	P503E	STR											
	6	5	26-3 5/16	P504E	STR											
	10	5	7-4	P505E	17		1-7	4-2	1-7							
	10	5	6-10 13/16	P506E	T4	0	1-7		1-7	0		0				
	64	5	5-6	P507E	17		1-5	2-8	1-5							
	18	9	50-9/16	P901E	1	1-7	49-2 1/4							0-11 3/4		
	18	9	31-4 5/16	P902E	1	1-7	29-9 5/16							0-11 3/4		
	15	10	20-1	P1001E	STR											
	30	10	21-0	P1002E	STR											
	30	10	21-6	P1003E	STR							0				
	18	6	37-1 1/2	PF601	STR											
	300	6	12-6	PF602	STR											
	80	8	38-2 1/2	PF801	STR											
	75	10	10-8	PF1001E	2	1-10	8-10									

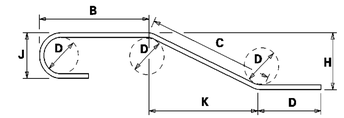

NOTES:
1. FIGURES SHOWN IN CIRCLES REPRESENT BAR BEND TYPES.
2. STANDARD BAR BENDS INCLUDE ONLY TYPES 1-32, S1-S12, AND T1-T16.
3. ALL DIMENSIONS ARE OUT-TO-OUT OF BAR EXCEPT "A" AND "G" ON STANDARD 180° AND 135° HOOKS.
4. "J" DIMENSIONS ON 180° HOOKS TO BE SHOWN ONLY WHERE NECESSARY TO RESTRICT HOOK SIZE, OTHERWISE STANDARD HOOKS ARE TO BE USED.
5. WHERE "J" IS NOT SHOWN, "J" WILL BE KEPT EQUAL TO OR LESS THAN "H" ON TRUSS BARS. WHERE "J" CAN EXCEED "H", IT SHALL BE SHOWN.
6. "H" DIMENSIONS OF STIRRUPS TO BE SHOWN WHERE NECESSARY TO FIT WITHIN THE CONCRETE.
7. UNLESS OTHERWISE NOTED, DIAMETER "D" IS THE SAME FOR ALL BENDS AND HOOKS ON A BAR.
8. WHERE SLOPE DIFFERS FROM 45° OFFSET, "H" AND "K" MUST BE SHOWN.
9. WHERE BARS ARE TO BE BENT MORE ACCURATELY THAN STANDARD BENDING TOLERANCES, BENDING DIMENSIONS WHICH REQUIRE CLOSER FABRICATION SHOULD HAVE LIMITS INDICATED.
10. FOR RECOMMENDED DIAMETER "D", OF BENDS, HOOKS, ETC., REFER TO TABLE AT RIGHT, 'CRSI' OR 'ACI' TABLES.
11. TYPE S1-S12, T1-T16 APPLY TO BAR SIZES 3 THROUGH 6.

ASTM STANDARD ENGLISH REINFORCING BARS				RECOMMENDED END HOOKS, APPLICABLE TO ALL GRADES			
	NOMINAL DIMENSIONS				180° HOOKS		90° HOOKS
BAR SIZE	DIAMETER (inches)	AREA (inches²)	WEIGHT (lbs./ft.)	D	A OR G	J	A OR G
3	0.375	0.110	0.376	2"*	5"	3"	6"
4	0.500	0.200	0.668	3"	6"	4"	8"
5	0.625	0.310	1.043	3"*	7"	5"	10"
6	0.750	0.440	1.502	4"*	8"	6"	1'-0"
7	0.875	0.600	2.044	5"*	10"	7"	1'-2"
8	1.000	0.790	2.670	6"	11"	8"	1'-4"
9	1.128	1.000	3.400	9"*	1'-3"	11"*	1'-7"
10	1.270	1.270	4.303	10"*	1'-5"	1'-1"*	1'-10"
11	1.410	1.560	5.313	1'-0"	1'-7"	1'-2"*	2'-0"
14	1.693	2.250	7.650	1'-6"*	2'-3"	1'-9"*	2'-7"
18	2.257	4.000	13.600	2'-0"	3'-0"	2'-4"*	3'-5"

STANDARD BAR BENDS

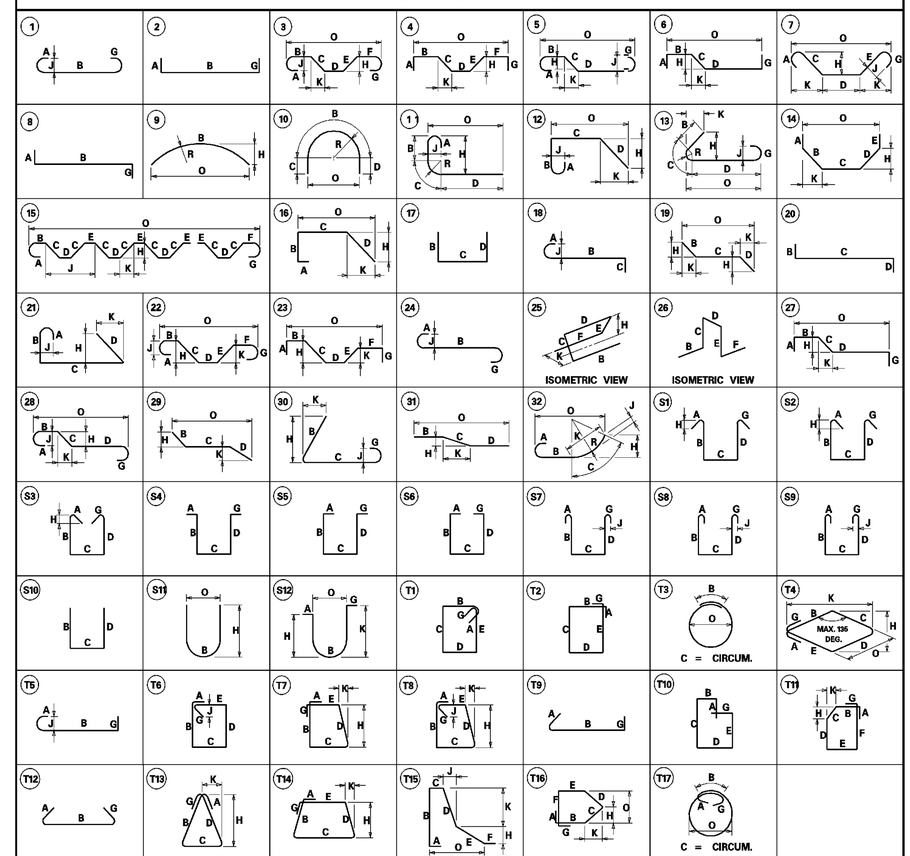

SPECIAL BAR BENDS

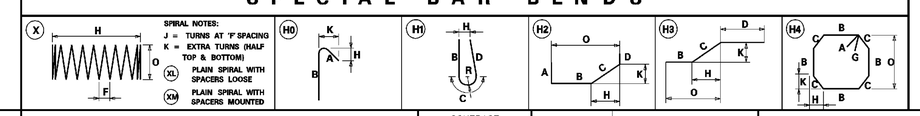

DELAWARE DEPARTMENT OF TRANSPORTATION

ADDENDUMS / REVISIONS

SR1/I-95 INTERCHANGE - CHRISTIANA MALL ROAD BRIDGE

CONTRACT	BRIDGE NO.	1-223
T201009004	DESIGNED BY:	JMS
COUNTY		
NEW CASTLE	CHECKED BY:	JSW

RAMP R1 OVER SR7 REINFORCING BAR LIST PIER

S7-24
SHEET NO. 59
TOTAL SHTS. 164

8/19/2010 12:18:22 PM
M:\PROJECTS\2003\03059_DELTRNPK\SRMALL\CADD\3009004\PLANS\BR04_BR-S7_RAMPR1.DGN

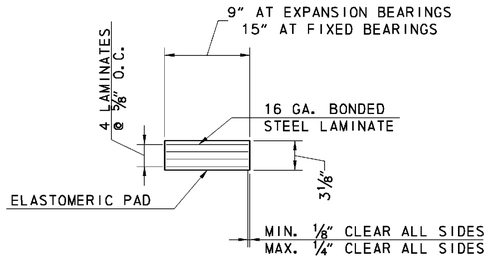

ELASTOMERIC BEARING PAD SIDE ELEVATION

SCALE: 1 1/2"=1'-0"

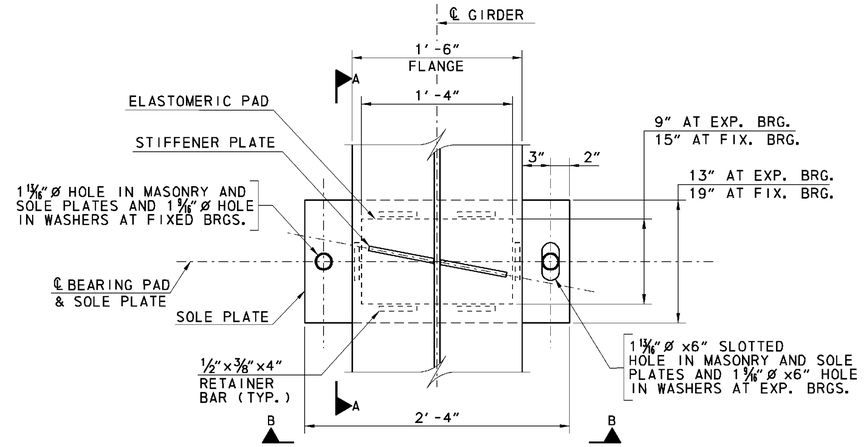

BEARING PLAN

SCALE: 1 1/2"=1'-0"

NOTES:

1. THE BEARINGS ARE DESIGNED ACCORDING TO "METHOD B" OF THE AASHTO LRFD BRIDGE DESIGN SPECIFICATIONS, 2009 INTERIMS. ELASTOMER SHALL BE GRADE 55 +/- 5. THE DESIGN SHEAR MODULUS, G = 130 PSI AT 73°F FOR ELASTOMERIC PADS. ELASTOMERIC BEARING PAD THICKNESS SHOWN IS UNCOMPRESSED.
2. BEARINGS SHALL BE PLACED NORMAL TO GIRDER. THE SOLE PLATE, MASONRY PLATE AND LAMINATED ELASTOMERIC PAD SHALL BE VULCANIZED IN THE SHOP AS ONE UNIT AND SHIPPED TO THE SITE.
3. ALL STEEL PLATES SHALL BE A709 GRADE 50 STEEL. ALL STEEL PLATES EXCEPT FOR THE BEVELED SOLE PLATES SHALL BE HOT-DIP GALVANIZED IN ACCORDANCE WITH AASHTO M111. EXPOSED SURFACES OF ALL STEEL PLATES SHALL BE PAINTED TO MATCH THE FINISHED BRIDGE COLOR. DO NOT PAINT ELASTOMERIC PAD.
4. ANCHOR BOLTS SHALL MEET THE REQUIREMENTS OF AASHTO M183, AND SHALL HAVE HEX NUTS & WASHERS. ALL NUTS SHALL MEET THE REQUIREMENTS OF AASHTO M291. ALL WASHERS SHALL MEET THE REQUIREMENTS OF AASHTO M293. ALL ANCHOR BOLTS, BOLTS, NUTS AND WASHERS SHALL BE HOT-DIP GALVANIZED IN ACCORDANCE WITH AASHTO M232.
5. THE NUT FOR THE ANCHOR BOLT THROUGH THE SOLE PLATE IS TO BE 0.25 IN CLEAR. BURR THREADS AT FACE OF NUT.
6. ANCHOR BOLTS SHALL BE SWEDGED AND MAY BE CAST IN PLACE OR GROUTED IN PREFORMED (SLEEVED OR DRILLED) HOLES. FILL SLOTS AND HOLES AROUND ANCHOR BOLTS WITH NON-HARDENING CAULKING COMPOUND OR ELASTIC JOINT SEALER.
7. EXERCISE CAUTION WHILE MAKING FIELD OR SHOP WELDS WHILE AN ELASTOMERIC BEARING PAD IS IN CONTACT WITH THE STEEL. IN NO CASE SHALL THE ELASTOMER OR ELASTOMER BAND BE EXPOSED TO INSTANTANEOUS TEMPERATURES GREATER THAN 400°F. ANY DAMAGE TO THE ELASTOMERIC BEARING DUE TO WELDING WILL BE CAUSE FOR REJECTION. THE TEMPERATURE SHALL BE MONITORED BY HEAT CRAYONS FURNISHED BY THE CONTRACTOR.
8. BEARINGS SHALL BE PAID FOR UNDER ITEM 605581 ELASTOMERIC BRIDGE BEARING PAD. BEARINGS SHALL INCLUDE SOLE PLATES, ANCHOR BOLTS AND APPURTENANCES NEEDED TO SUPPLY BEARINGS.
9. FOR OTHER INFORMATION REGARDING BEARINGS, SEE SPECIFICATIONS.

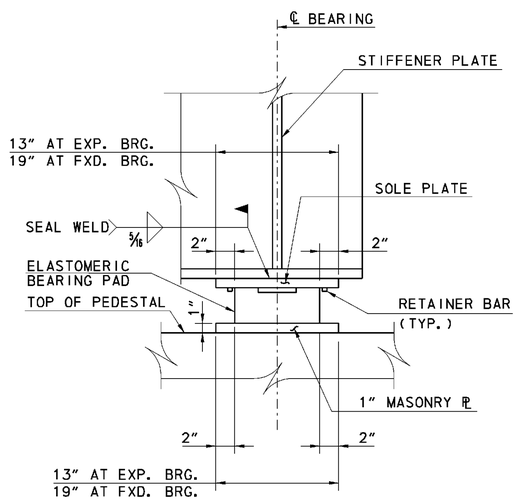

ELEVATION A-A

SCALE: 1 1/2"=1'-0"

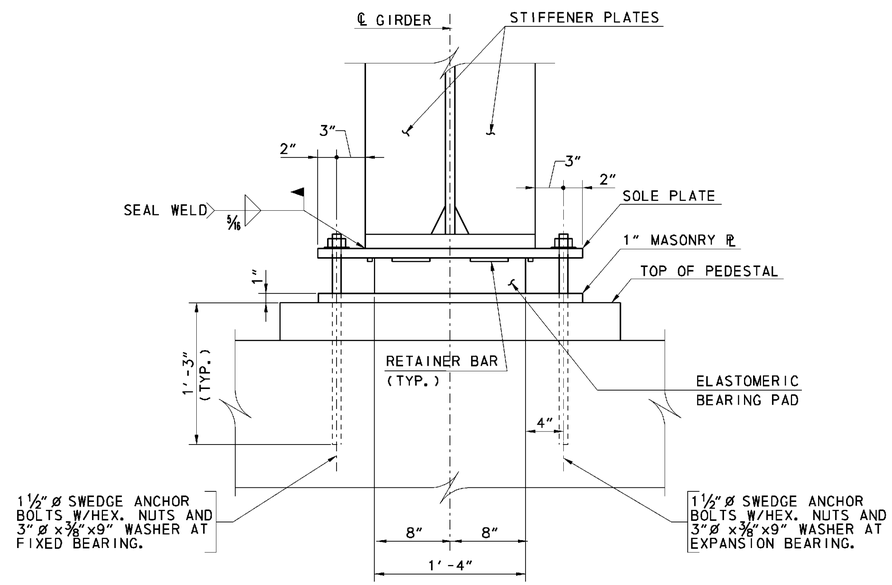

ELEVATION B-B

SCALE: 1 1/2"=1'-0"

CROSS REFERENCE NOTES:

1. FOR GENERAL PLAN AND ELEVATION, SEE SHEET S7-1.
2. FOR VERTICAL CURVE DATA, SEE SHEET S7-2.
3. FOR TYPICAL SECTION, SEE SHEET S7-3.
4. FOR ABUTMENT A DETAILS, SEE SHEETS S7-9 AND S7-10.
5. FOR ABUTMENT B DETAILS, SEE SHEETS S7-11 AND S7-12.
6. FOR PIER DETAILS, SEE SHEETS S7-22 AND S7-23.
7. FOR FRAMING PLAN AND BEAM DETAILS, SEE SHEETS S7-26 AND S7-27.

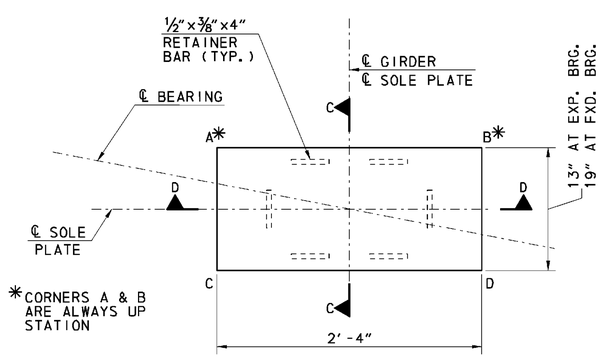

SOLE PLATE - PLAN

SCALE: 1 1/2"=1'-0"

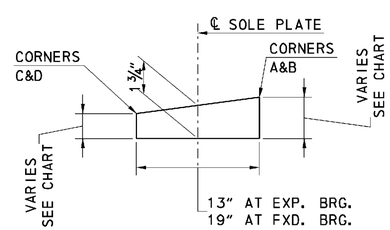

SECTION C-C

SCALE: 1 1/2"=1'-0"

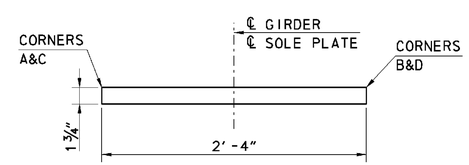

SECTION D-D

SCALE: 1 1/2"=1'-0"

BEVELED SOLE PLATE THICKNESS		
LOCATION	DOWN STATION (CORNERS C&D)	UP STATION (CORNERS A&B)
ABUT. A	1.49"	2.01"
PIER	1.66"	1.84"
ABUT. B	1.94"	1.56"

0 1 1/2 2

SCALE: 1 1/2"=1'-0"

8/19/2010 12:33:22 PM
M:\PROJECTS\2003\03059_DELTRNPK\SRIMALL\CADD\3009004\PLANS\BD01_BR-S7_RAMPR1.DGN

DELAWARE DEPARTMENT OF TRANSPORTATION

ADDENDUMS / REVISIONS

SR1/I-95 INTERCHANGE - CHRISTIANA MALL ROAD BRIDGE

CONTRACT	BRIDGE NO.	1-223
T201009004	DESIGNED BY:	JMS
COUNTY		
NEW CASTLE	CHECKED BY:	JSW

RAMP R1 OVER SR7 BEARING DETAILS

SHEET NO.	TOTAL SHTS.
S7-25	60
	164

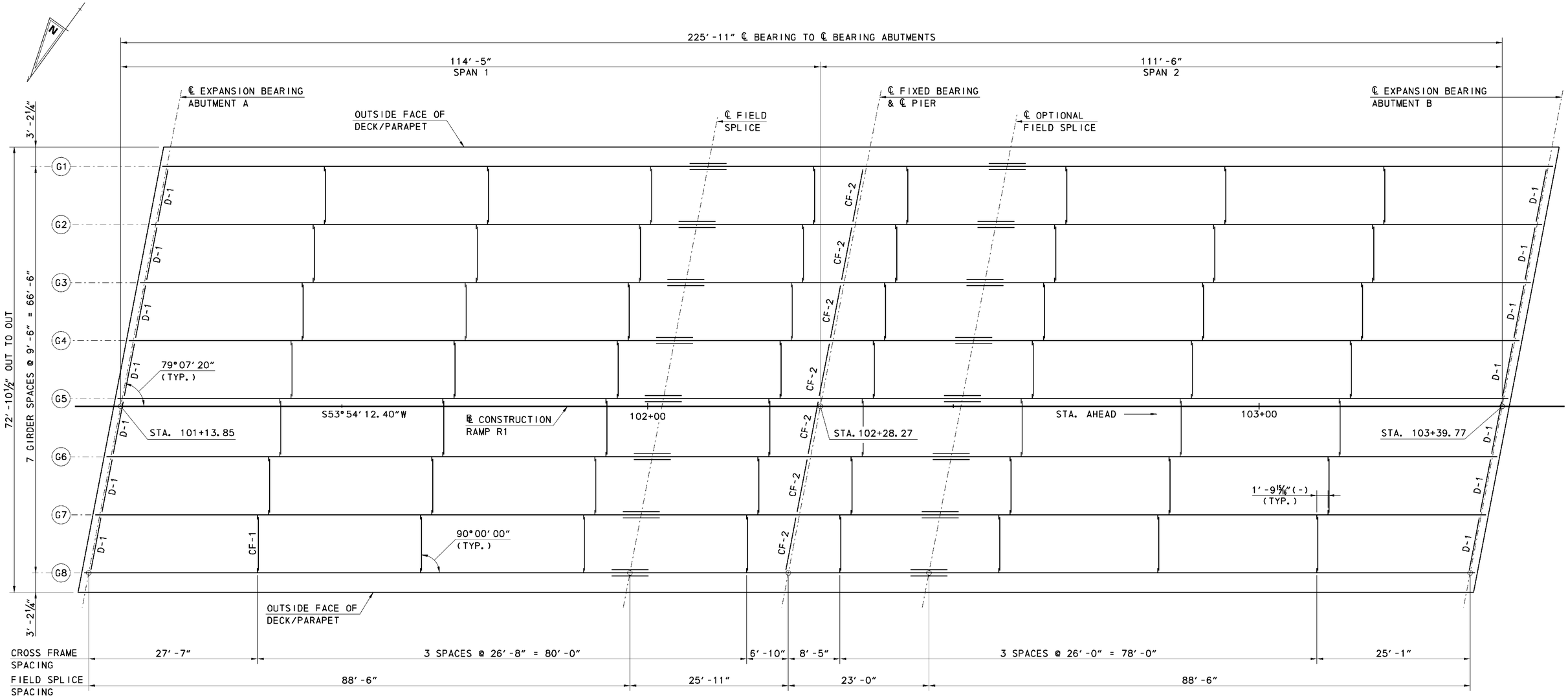

FRAMING PLAN

SCALE: ⅛"=1'-0"

NOTES:

1. ALL CROSS FRAMES ARE TYPE CF-1 UNLESS OTHERWISE NOTED.

CROSS REFERENCE NOTES:

1. FOR GIRDER DETAILS, SEE SHEET S7-27.
2. FOR CROSS BRACING DETAILS, SEE SHEET S7-28.
3. FOR FIELD SPLICE DETAILS, SEE SHEET S7-29.

0 4 16
2 8
SCALE: ⅛"=1'-0"

8/19/2010 12:34:24 PM
M:\PROJECTS\2003\03059_DELTRNPK\SRTMALL\CADD\3009004\PLANS\FR01_BR-S7_RAMPR1.DGN

DELAWARE DEPARTMENT OF TRANSPORTATION	ADDENDUMS / REVISIONS	SR1/I-95 INTERCHANGE - CHRISTIANA MALL ROAD BRIDGE	CONTRACT T201009004	BRIDGE NO. 1-223	RAMP R1 OVER SR7 FRAMING PLAN	SHEET NO. S7-26
			COUNTY NEW CASTLE	DESIGNED BY: RST		61
				CHECKED BY: JSW		TOTAL SHTS. 164

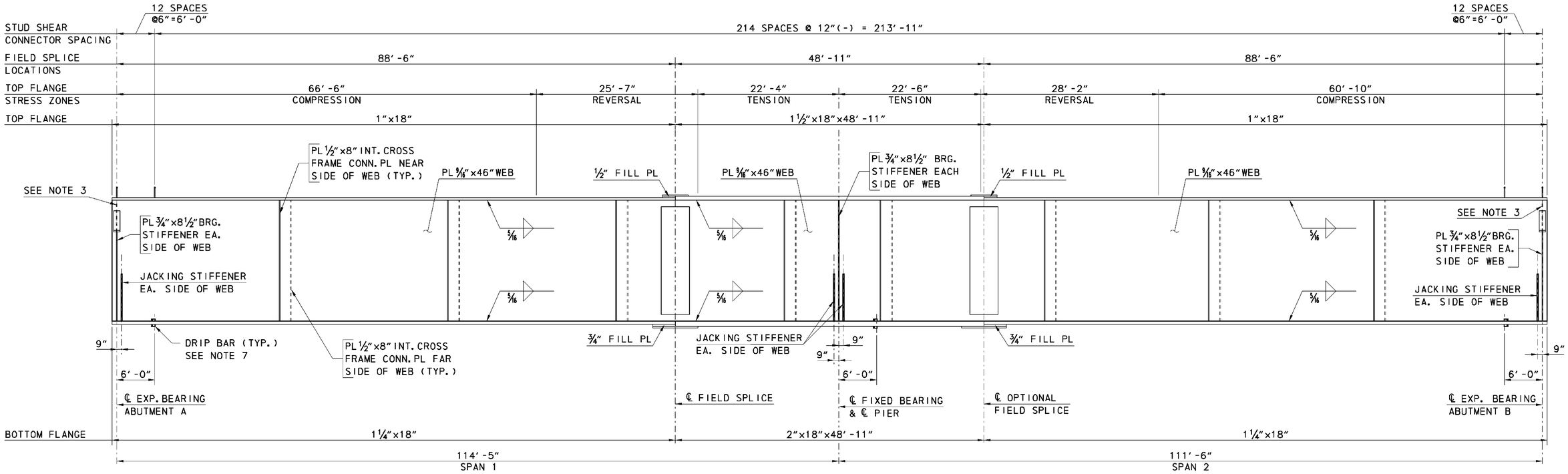

GIRDER ELEVATION

NO SCALE

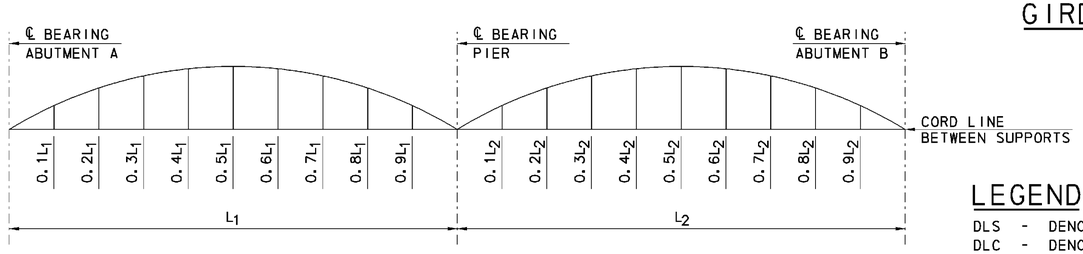

CAMBER DIAGRAM

NO SCALE

LEGEND

DLS - DENOTES DEFLECTION DUE TO STRUCTURAL STEEL.
DLC - DENOTES DEFLECTION DUE TO CONCRETE SLAB.
SDL - DENOTES DEFLECTION DUE TO PARAPET.
TD&C - DENOTES TOTAL DEAD LOAD DEFLECTION AND CAMBER.
VCO - DENOTES CAMBER FOR VERTICAL CURVE ORDINATE DUE TO ROADWAY PROFILE.

NOTES:

1. GIRDERS WEB, TOP AND BOTTOM FLANGE STEEL SHALL BE AASHTO M270, GRADE 50W, UNLESS OTHERWISE NOTED.
2. THERE SHALL BE NO FIELD WELDING TO THE TOP FLANGE, EXCEPT FOR SHEAR STUDS, IN THE TENSION AND STRESS REVERSAL AREAS.
3. EXTEND FASCIA GIRDER EXTERIOR BEARING STIFFENER TO TOP FLANGE AT THE ABUTMENTS.
4. SPACE SHEAR STUDS TO MISS SPLICE BOLTS.
5. ESTIMATED NUMBER OF SHEAR STUDS IS 5,736 FOR GIRDERS 1-8.
6. THE CAMBER TOLERANCE IS 0"(-) TO ¾"(+).
7. DRIP BARS TO BE LOCATED ON GIRDERS G1 AND G8 ONLY.

CROSS REFERENCE NOTES:

1. FOR FRAMING PLAN, SEE SHEET S7-26.
2. FOR SPLICE DETAILS, SEE SHEET S7-29.
3. FOR CROSS FRAME AND STIFFENER DETAILS, SEE SHEET S7-28.
4. FOR DRIP BAR DETAILS, SEE SHEET S7-29.
5. FOR JACKING STIFFENER DETAILS, SEE SHEET S7-29.

DEFLECTION AND TOTAL CAMBER

	GIRDER	0.1L1	0.2L1	0.3L1	0.4L1	0.5L1	0.6L1	0.7L1	0.8L1	0.9L1	℄ PIER	0.1L2	0.2L2	0.3L2	0.4L2	0.5L2	0.6L2	0.7L2	0.8L2	0.9L2
EXTERIOR	DLS	3/16"	5/16"	7/16"	7/16"	7/16"	3/8"	1/4"	3/16"	1/16"	0"	0"	1/16"	3/16"	1/4"	5/16"	3/8"	5/16"	1/4"	1/8"
	DLC	3/4"	1 3/8"	1 3/4"	1 7/8"	1 13/16"	1 9/16"	1 1/16"	11/16"	1/4"	0"	1/16"	3/8"	13/16"	1 1/8"	1 7/16"	1 9/16"	1 7/16"	1 1/8"	5/8"
	SDL	1/16"	1/8"	3/16"	3/16"	3/16"	1/8"	1/8"	1/16"	0"	0"	0"	1/16"	1/16"	1/8"	1/8"	1/8"	1/8"	1/8"	1/16"
	TD&C	1 1/16"	1 13/16"	2 5/16"	2 1/2"	2 7/16"	2 1/8"	1 7/16"	15/16"	5/16"	0"	1/8"	1/2"	1 1/16"	1 1/2"	1 7/8"	2 1/16"	1 15/16"	1 1/2"	7/8"
	VCO	1/8"	1/4"	3/8"	1/2"	1/2"	1/2"	1/16"	5/16"	3/16"	0"	3/16"	5/16"	7/16"	1/2"	9/16"	1/2"	7/16"	5/16"	3/16"
	TD&C+VCO	1 3/16"	2 1/16"	2 11/16"	2 15/16"	2 15/16"	2 9/16"	1 7/8"	1 1/4"	1/2"	0"	5/16"	7/8"	1 1/2"	2"	2 7/16"	2 3/16"	2 3/8"	1 7/8"	1 1/16"
INTERIOR	DLS	3/16"	5/16"	7/16"	7/16"	7/16"	3/8"	1/4"	1/8"	1/16"	0"	0"	1/8"	3/16"	5/16"	3/8"	3/8"	3/8"	1/4"	1/8"
	DLC	7/8"	1 5/8"	2 1/8"	2 5/16"	2 3/16"	1 7/8"	1 5/16"	3/4"	1/4"	0"	1/8"	1/2"	1"	1 1/16"	1 3/4"	1 7/8"	1 3/4"	1 3/8"	3/4"
	SDL	1/16"	1/8"	3/16"	3/16"	3/16"	1/8"	1/8"	1/16"	0"	0"	0"	1/16"	1/16"	1/8"	1/8"	1/8"	1/8"	1/8"	1/16"
	TD&C	1 1/8"	2 1/16"	2 11/16"	2 15/16"	2 13/16"	2 3/8"	1 5/8"	15/16"	15/16"	0"	3/16"	5/8"	1 1/4"	1 7/8"	2 1/4"	2 7/16"	2 1/4"	1 3/4"	1"
	VCO	1/8"	1/4"	3/8"	1/2"	1/2"	1/2"	1/16"	5/16"	3/16"	0"	3/16"	5/16"	7/16"	1/2"	9/16"	1/2"	7/16"	5/16"	3/16"
	TD&C+VCO	1 5/16"	2 5/16"	3 1/16"	3 3/8"	3 3/16"	2 7/8"	2 1/16"	1 5/16"	1/2"	0"	3/8"	15/16"	1 3/4"	2 3/8"	2 13/16"	2 15/16"	2 11/16"	2 1/16"	1 3/16"

8/19/2010 12:35:40 PM
M:\PROJECTS\2003\03059_DELTRNPK\PRIMALL\CADD\3009004\PLANS\BM01_BR-S7_RAMPR1.DGN

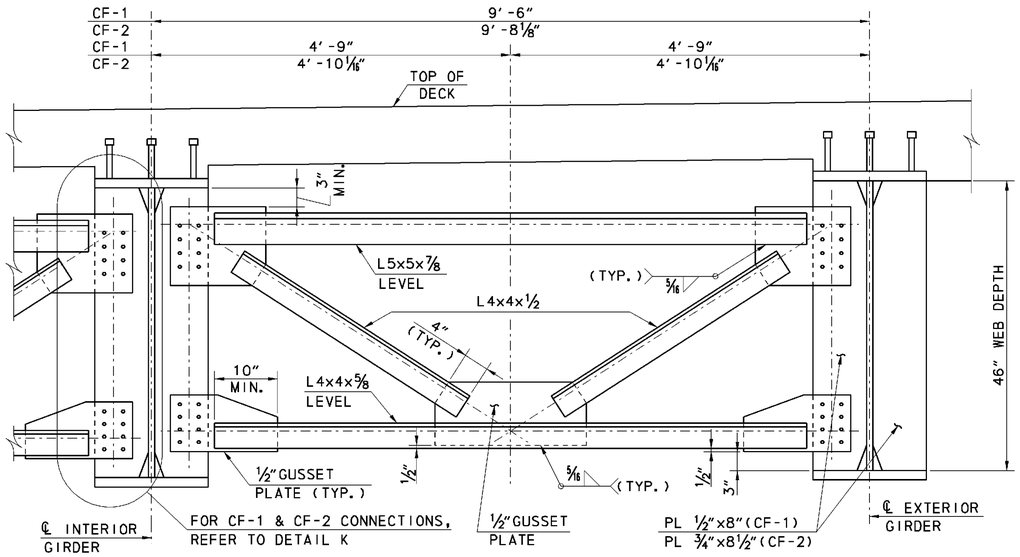

INTERMEDIATE CROSSFRAME DETAIL (CF-1&CF-2)

SCALE: 1"=1'-0"

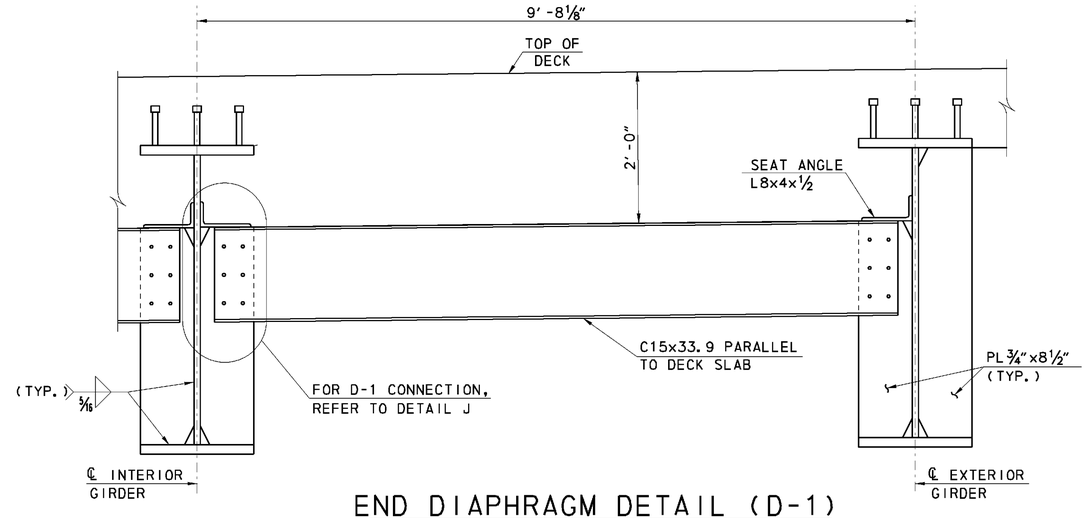

END DIAPHRAGM DETAIL (D-1)

(DECK DIAPHRAGM DETAILS NOT SHOWN)
SCALE: 1"=1'-0"

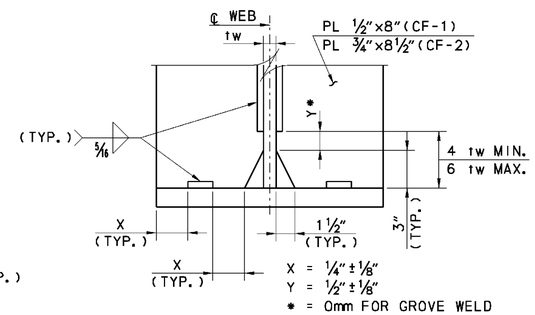

DETAIL AT END OF STIFFENER

N. T. S.

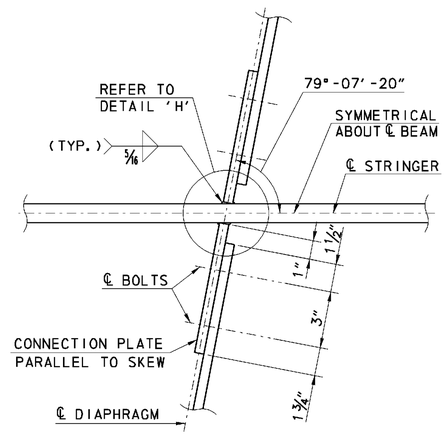

CONNECTION DETAIL FOR D-1 AND CF-2

(CF-2 SHOWN)
SCALE: 3"=1'-0"

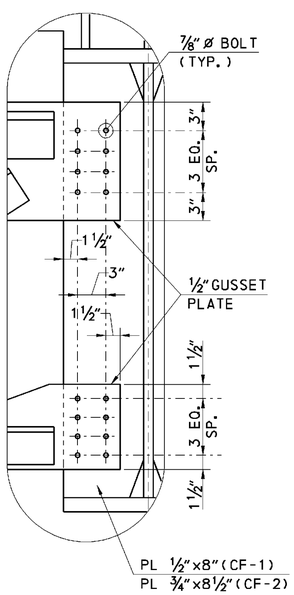

DETAIL K

SCALE: 1 1/2"=1'-0"

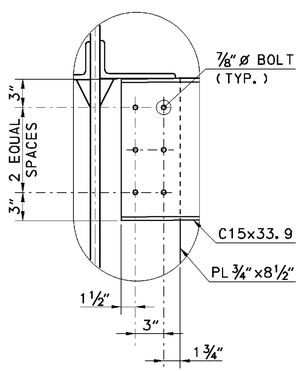

DETAIL J

SCALE: 1 1/2"=1'-0"

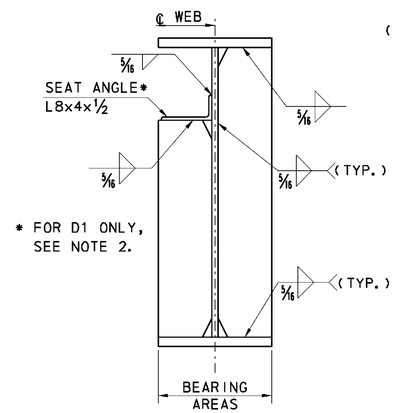

BEARING STIFFENER/ CONNECTION PLATE DETAIL

SCALE: 1"=1'-0"

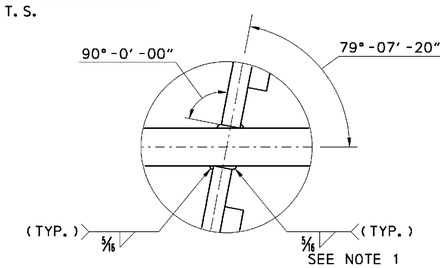

DETAIL H

SCALE: 6"=1'-0"

NOTES:
1. WELD SIZE MUST BE INCREASED BY AMOUNT OF GAP BETWEEN CONNECTION PLATE AND WEB WHEN GAP EXCEEDS 1/16". INDICATE SIZE ON SHOP DRAWINGS.
2. BEARING STIFFENER ON EXTERIOR SIDE OF FASCIA GIRDER TO BE EXTENDED TO TOP FLANGE.

CROSS REFERENCE NOTES:
1. FOR FRAMING PLAN, SEE SHEET S7-26.
2. FOR DECK DIAPHRAGM DETAIL, SEE SHEET S7-33.
3. FOR GIRDER DETAILS, SEE SHEET S7-27.
4. FOR BOLT INFORMATION, SEE SHEET S7-2.

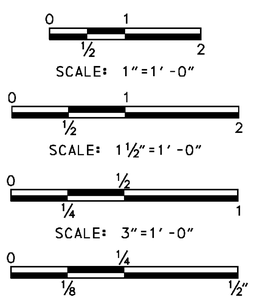

DELAWARE DEPARTMENT OF TRANSPORTATION	ADDENDUMS / REVISIONS	SR1/I-95 INTERCHANGE - CHRISTIANA MALL ROAD BRIDGE	CONTRACT T201009004	BRIDGE NO. 1-223	RAMP R1 OVER SR7 CROSS FRAME AND BREARING STIFFENER DETAILS	S7-28
			COUNTY NEW CASTLE	DESIGNED BY: RST		SHEET NO. 63
				CHECKED BY: JSW		TOTAL SHTS. 164

8/19/2010 12:36:46 PM
M:\PROJECTS\2003\03059_DEL_TRNPK\SR1MALL\CADD\3009004\PLANS\BM03_BR_S7_RAMPR1.DGN

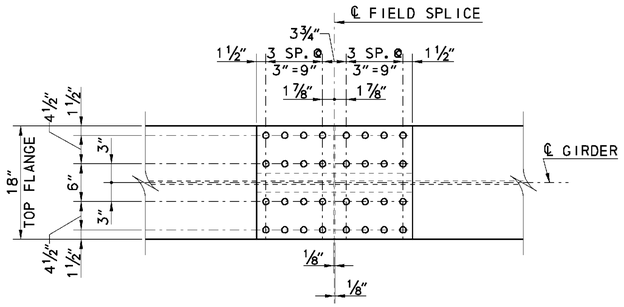

PLAN - TOP FLANGE

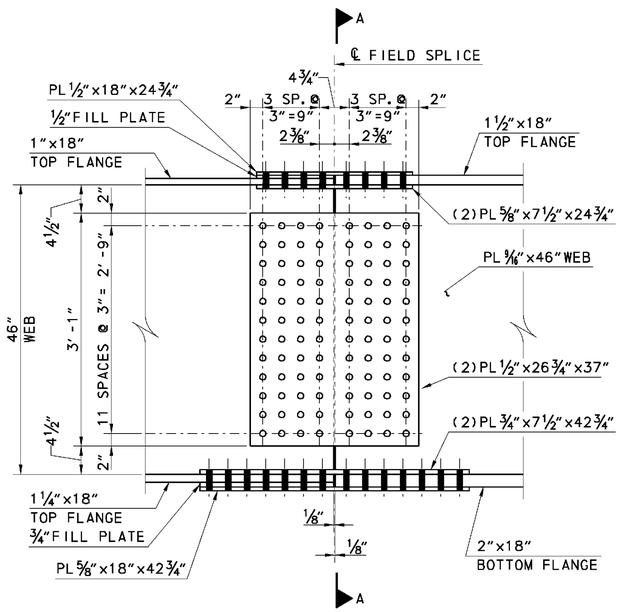

ELEVATION - WEB SPLICE

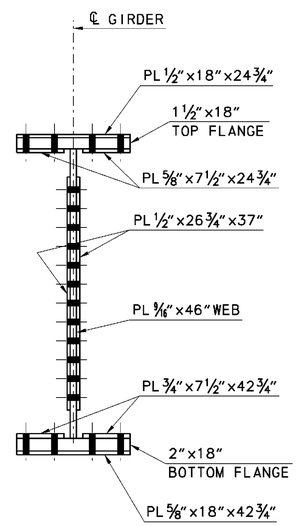

SECTION A-A

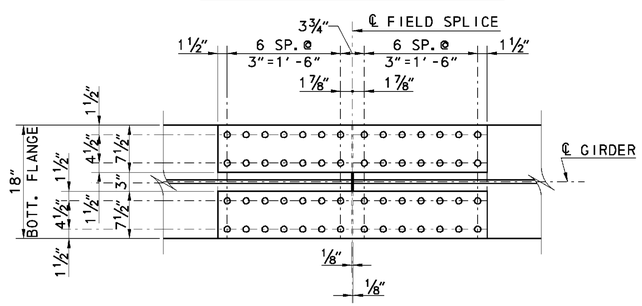

PLAN - BOTTOM FLANGE

NOTES:

1. FIELD SPLICES SHALL BE COMPLETELY SHOP ASSEMBLED AND MATCH MARKED AFTER ALL SHOP WELDING HAS BEEN COMPLETED. CONTACT SURFACES SHALL BE FREE OF ALL OIL AND DIRT.
2. HOLES TO BE 15/16"DIAMETER FOR ⅞"DIAMETER HIGH STRENGTH BOLTS (A325).
3. ON FASCIA GIRDERS THE BOLTS SHALL BE PLACED SO THAT THE BOLT HEAD IS VISIBLE ON THE OUTSIDE FACE OF THE WEB.
4. ALL BOLTS ON FLANGE SPLICES SHALL HAVE BOLT HEADS ON THE BOTTOM.

FIELD SPLICE DETAILS

SCALE: 1"=1'-0"

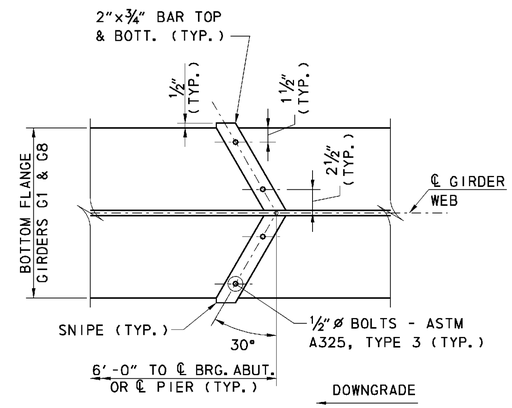

DRIP BAR DETAIL

SCALE: 1½"=1'-0"

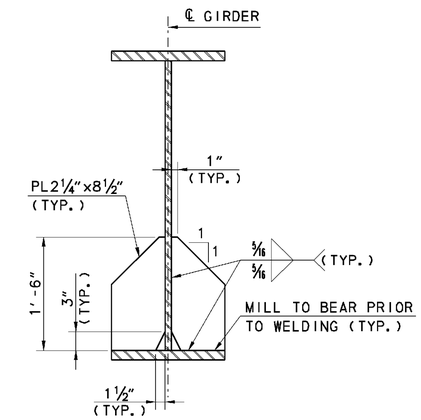

JACKING STIFFENER DETAIL

SCALE: 1½"=1'-0"

CROSS REFERENCE NOTES:

1. FOR FRAMING PLAN, SEE SHEET S7-26.
2. FOR GIRDER ELEVATION, SEE SHEET S7-27.
3. FOR BOLT AND BOLT HOLE INFORMATION, SEE GENERAL NOTES, SHEET S7-2.
4. FOR DRIP BAR LOCATIONS, SEE SHEET S7-27.

0 1 ½ 2
SCALE: 1"=1'-0"

0 1 ½ 2
SCALE: 1½"=1'-0"

8/19/2010 12:37:25 PM
M:\PROJECTS\2003\03059_DELTRNPK\SRINALL\CADD\3009004\PLANS\BM02_BR-S7_RAMPR1.DGN

DELAWARE DEPARTMENT OF TRANSPORTATION	ADDENDUMS / REVISIONS		SR1/I-95 INTERCHANGE - CHRISTIANA MALL ROAD BRIDGE	CONTRACT T201009004	BRIDGE NO. 1-223	RAMP R1 OVER SR7 FIELD SPLICE AND DRIP BAR DETAILS	S7-29
				COUNTY NEW CASTLE	DESIGNED BY: JMS		SHEET NO. 64
					CHECKED BY: JSW		TOTAL SHTS. 164

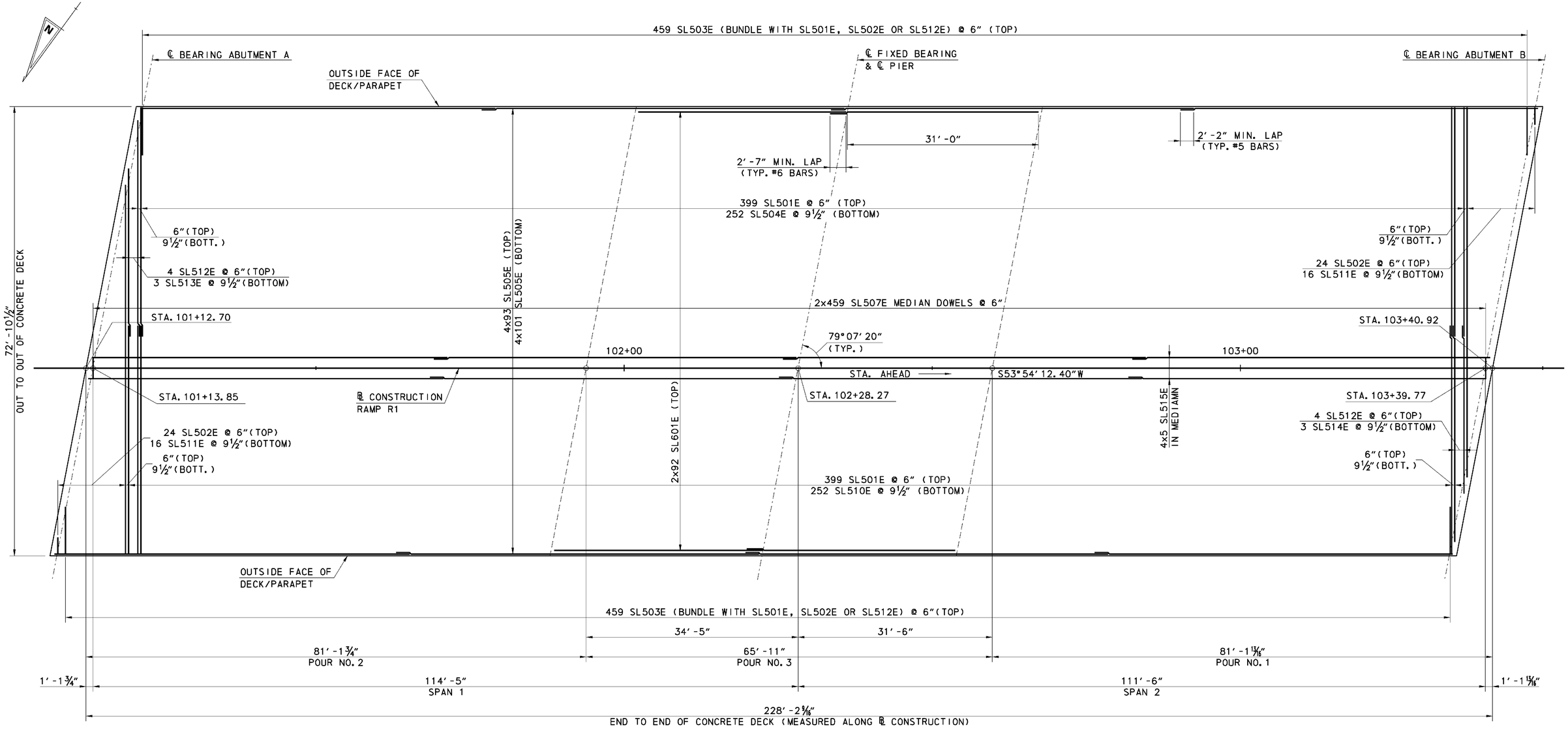

DECK SLAB PLAN

SCALE: ⅛"=1'-0"

NOTES:

1. REINFORCING IN PARAPET AND DECK DIAPHRAGMS NOT SHOWN FOR CLARITY.
2. ALL DECK POURS SHALL BE PARALLEL TO THE CENTERLINE OF BEARINGS.
3. THE POURING SEQUENCE FOR THE BRIDGE DECK SLAB SHALL BE MADE IN THE ORDER INDICATED: POUR NO. 1, POUR NO. 2, POUR NO. 3, EXCEPT AS MODIFIED BELOW.
4. THE CONTRACTOR MAY REVISE THE ORDER OF THE FOLLOWING POURS, 1 AND 2. THE CONTRACTOR MAY PERFORM POURS 1 AND 2 SIMULTANEOUSLY.
5. THERE MUST BE AT LEAST FORTY (40) HOURS BETWEEN COMPLETION OF ONE NUMBER POUR AND THE START OF THE NEXT NUMBERED POUR.
6. DO NOT CHAMFER EDGES AT DECK POUR JOINTS.

CROSS REFERENCE NOTES:

1. FOR TYPICAL SECTION, SEE SHEET S7-3.
2. FOR FINISHED DECK ELEVATIONS, SEE SHEET S7-32.
3. FOR PARAPET REINFORCING, SEE SHEET S7-31.
4. FOR END DIAPHRAGM REINFORCING, SEE SHEET S7-33.

0 4 16
2 8
SCALE: ⅛"=1'-0"

S7-30

DELAWARE DEPARTMENT OF TRANSPORTATION	ADDENDUMS / REVISIONS	SR1/I-95 INTERCHANGE - CHRISTIANA MALL ROAD BRIDGE	CONTRACT T201009004	BRIDGE NO. 1-223	RAMP R1 OVER SR7 DECK SLAB PLAN AND POURING SEQUENCE	SHEET NO. 65
			COUNTY NEW CASTLE	DESIGNED BY: JMS		TOTAL SHTS. 164
				CHECKED BY: JSW		

8/19/2010 12:38:09 PM
M:\PROJECTS\2003\03059_DELTRNPK\SRIMALL\CADD\3009004\PLANS\DK01_BR-S7_RAMPR1.DGN

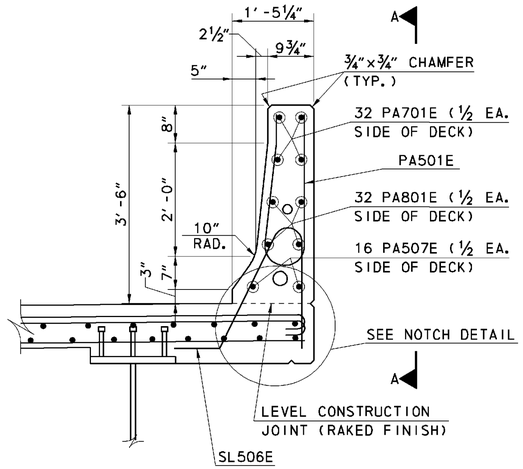

TYPICAL BARRIER REINFORCEMENT

SCALE: ¾"=1'-0"

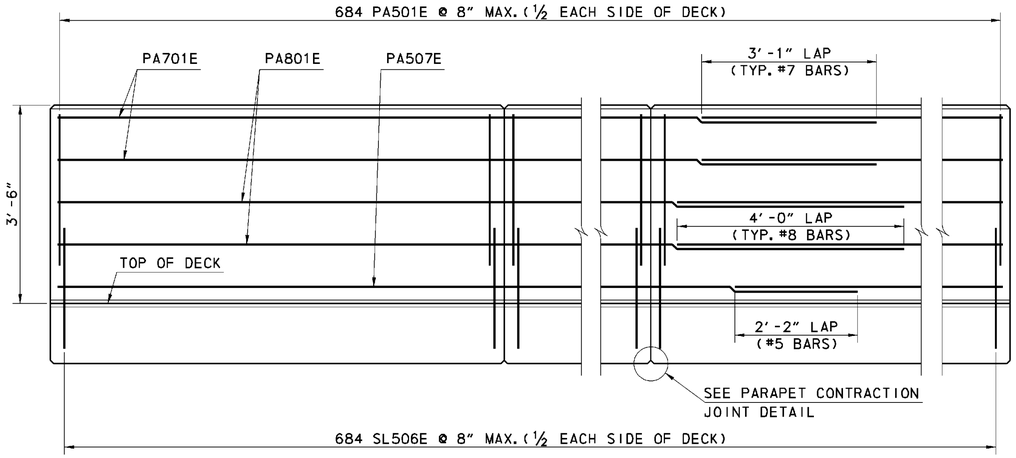

ELEVATION A-A - BRIDGE PARAPET

SCALE: ¾"=1'-0"

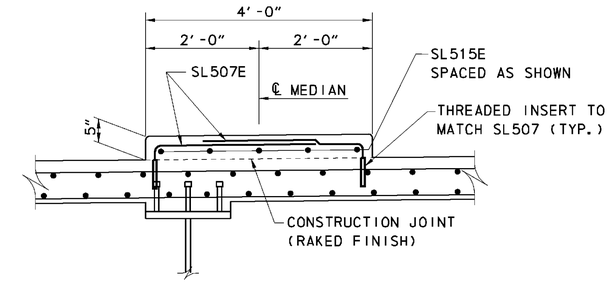

TYPICAL MEDIAN REINFORCEMENT

SCALE: ¾"=1'-0"

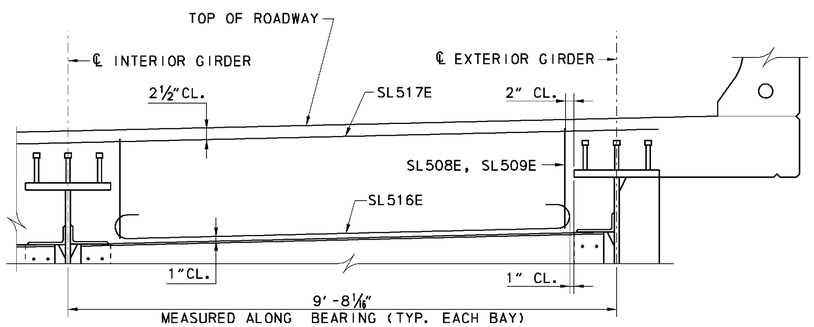

NOTE: NORMAL DECK REINFORCING NOT SHOWN.

CONCRETE DIAPHRAGM DETAIL

SCALE: ¾"=1'-0"

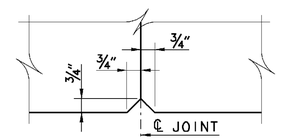

PARAPET CONTRACTION JOINT DETAIL (ELEVATION)

NO SCALE

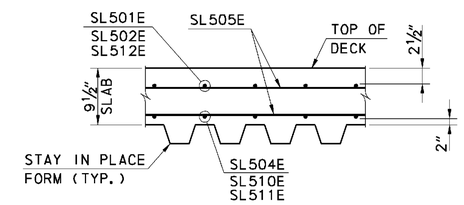

STEEL FORM SECTION

SCALE: NTS

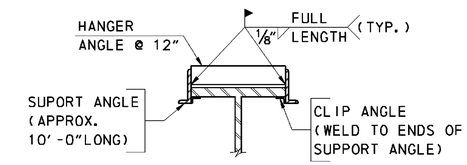

TENSION FLANGE FOR SIP FORMS

SCALE: NTS

STEEL FORM NOTES:

1. NO WELDING OF THESE FORMS TO FLANGES IN TENSION IS PERMITTED.
2. SIP FORMS SHALL BE VERTICALLY ADJUSTED TO ATTAIN FINISHED LINES AND GRADES REQUIRED ON THE PLANS.

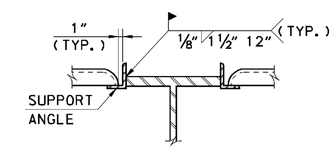

COMPRESSION FLANGE FOR SIP FORMS

SCALE: NTS

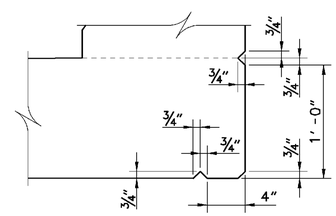

NOTCH DETAIL

NO SCALE

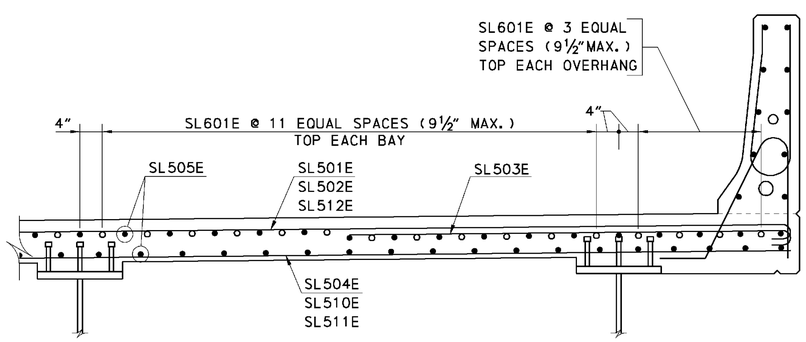

DETAIL - ADDITIONAL REINFORCING AT PIER

SCALE: ¾"=1'-0"

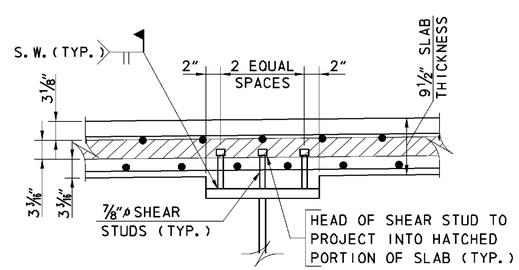

SHEAR STUD DETAIL

SCALE: NTS

NOTE: SIP FORM DETAILS NOT SHOWN

CROSS REFERENCE NOTES:

1. FOR PARAPET CONTRACTION JOINT SPACING, SEE SHEET S7-1.
2. FOR TYPICAL DECK REINFORCING AND DETAILS, SEE SHEETS S7-3 AND S7-30.

0 ½ 1 2 4

SCALE: ¾"=1'-0"

8/19/2010 12:39:57 PM
M:\PROJECTS\2003\03059_DELTRNPK\SRMALL\CADD\3009004\PLANS\PA01_BR-S7_RAMPR1.DGN

DELAWARE DEPARTMENT OF TRANSPORTATION	ADDENDUMS / REVISIONS	SR1/I-95 INTERCHANGE - CHRISTIANA MALL ROAD BRIDGE	CONTRACT T201009004	BRIDGE NO. 1-223	RAMP R1 OVER SR7 PARAPET, MEDIAN AND DECK DETAILS	SHEET NO. S7-31
			COUNTY NEW CASTLE	DESIGNED BY: JMS		66
				CHECKED BY: JSW		TOTAL SHTS. 164

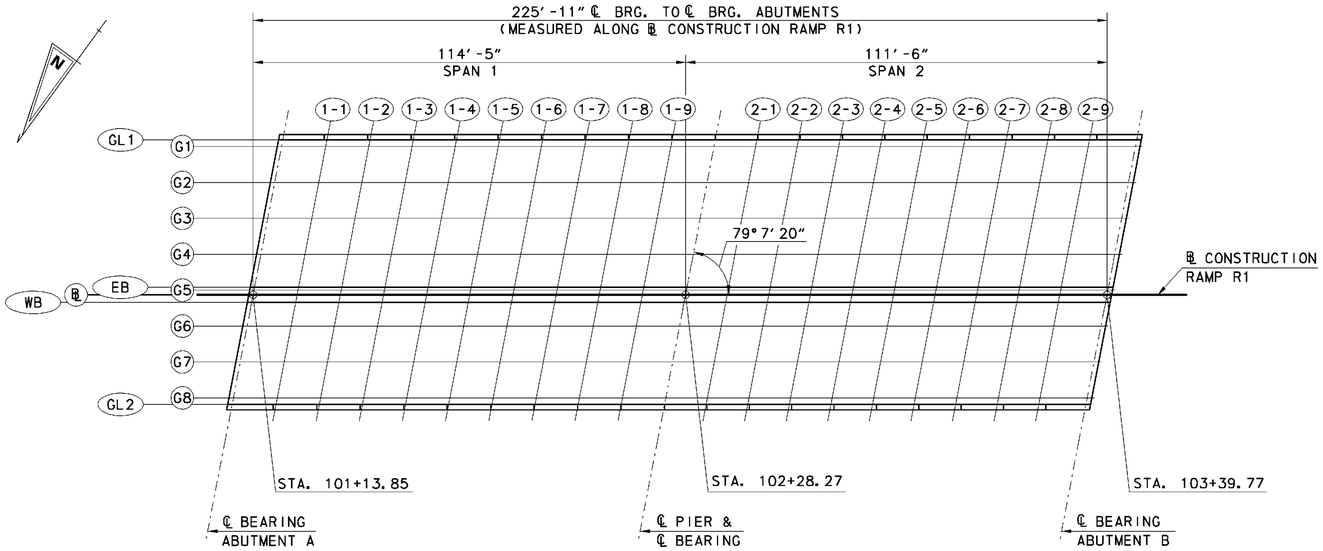

FINISHED DECK ELEVATIONS

SCALE: 1"=20'-0"

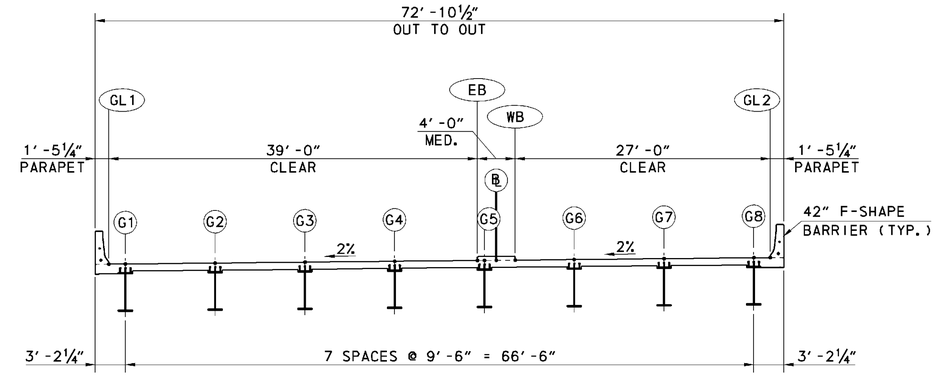

TYPICAL SECTION

SCALE: ⅛"=1'-0"

NOTES:
1. ELEVATIONS ARE GIVEN AT THE TOP OF THE CONCRETE DECK.

FINISHED DECK ELEVATION SCHEDULE

	℄ BRG ABUTMENT A		1-1	1-2	1-3	1-4	1-5	1-6	1-7	1-8	1-9	℄ BRG PIER		2-1	2-2	2-3	2-4	2-5	2-6	2-7	2-8	2-9	℄ BRG ABUTMENT B	
	STATION	FIN ELEV	FIN ELEV	FIN ELEV	FIN ELEV	FIN ELEV	FIN ELEV	FIN ELEV	FIN ELEV	FIN ELEV	FIN ELEV	STATION	FIN ELEV	FIN ELEV	FIN ELEV	FIN ELEV	FIN ELEV	FIN ELEV	FIN ELEV	FIN ELEV	FIN ELEV	FIN ELEV	STATION	FIN ELEV
GL1	101+21.72	68.20	68.66	69.11	69.53	69.90	70.23	70.51	70.74	70.94	71.08	102+36.14	71.18	71.24	71.25	71.22	71.15	71.03	70.87	70.67	70.43	70.14	103+47.64	69.81
G1	101+21.39	68.22	68.68	69.13	69.55	69.92	70.25	70.54	70.77	70.97	71.11	102+35.80	71.22	71.27	71.29	71.26	71.19	71.07	70.91	70.71	70.47	70.18	103+47.30	69.85
G2	101+19.56	68.34	68.80	69.25	69.68	70.06	70.39	70.68	70.93	71.13	71.28	102+33.98	71.39	71.46	71.48	71.45	71.39	71.28	71.13	70.94	70.70	70.42	103+45.48	70.10
G3	101+17.73	68.45	68.91	69.37	69.80	70.19	70.53	70.83	71.08	71.29	71.45	102+32.15	71.57	71.64	71.67	71.65	71.59	71.49	71.35	71.16	70.93	70.66	103+43.65	70.35
G4	101+15.92	68.57	69.03	69.49	69.93	70.32	70.67	70.98	71.23	71.45	71.62	102+30.34	71.74	71.82	71.85	71.85	71.80	71.70	71.57	71.39	71.16	70.90	103+41.84	70.59
EB	101+14.23	68.68	69.14	69.59	70.04	70.44	70.80	71.11	71.37	71.60	71.77	102+28.64	71.90	71.99	72.03	72.03	71.98	71.89	71.76	71.59	71.37	71.12	103+40.14	70.81
G5	101+14.09	68.69	69.15	69.60	70.05	70.45	70.81	71.12	71.39	71.61	71.78	102+28.51	71.92	72.00	72.04	72.04	72.00	71.91	71.78	71.61	71.39	71.13	103+40.01	70.83
℄	101+13.85	68.70	69.16	69.62	70.07	70.47	70.83	71.14	71.41	71.63	71.81	102+28.27	71.94	72.02	72.07	72.07	72.02	71.94	71.81	71.64	71.42	71.17	103+39.77	70.87
WB	101+13.46	68.73	69.19	69.64	70.09	70.50	70.85	71.17	71.44	71.66	71.84	102+27.88	71.97	72.06	72.11	72.11	72.07	71.98	71.85	71.68	71.47	71.22	103+39.38	70.92
G6	101+12.27	68.81	69.26	69.72	70.17	70.58	70.94	71.26	71.54	71.77	71.95	102+26.68	72.09	72.18	72.23	72.23	72.20	72.12	71.99	71.83	71.62	71.37	103+38.18	71.08
G7	101+10.44	68.93	69.38	69.84	70.29	70.71	71.08	71.41	71.69	71.92	72.11	102+24.86	72.26	72.36	72.41	72.43	72.40	72.32	72.21	72.05	71.85	71.60	103+36.36	71.32
G8	101+08.62	69.05	69.50	69.96	70.41	70.83	71.21	71.55	71.83	72.08	72.28	102+23.03	72.43	72.53	72.60	72.62	72.59	72.53	72.42	72.27	72.07	71.84	103+34.53	71.56
GL2	101+08.28	69.07	69.52	69.98	70.43	70.86	71.24	71.57	71.86	72.11	72.31	102+22.70	72.46	72.57	72.63	72.65	72.63	72.57	72.46	72.31	72.12	71.88	103+34.20	71.60

0 4 16
2 8
SCALE: ⅛"=1'-0"

0 20 50
10 30
SCALE: 1"=20'

S7-32

8/19/2010 12:41:19 PM
M:\PROJECTS\2003\03059_DELTRNPK\SRIMALL\CADD\3009004\PLANS\FD01_BR-S7_RAMPR1.DGN

DELAWARE DEPARTMENT OF TRANSPORTATION

ADDENDUMS / REVISIONS

SR1/I-95 INTERCHANGE - CHRISTIANA MALL ROAD BRIDGE

CONTRACT	BRIDGE NO.	1-223
T201009004	DESIGNED BY:	JMS
COUNTY		
NEW CASTLE	CHECKED BY:	JSW

RAMP R1 OVER SR7
FINISHED DECK ELEVATIONS

SHEET NO. 67
TOTAL SHTS. 164

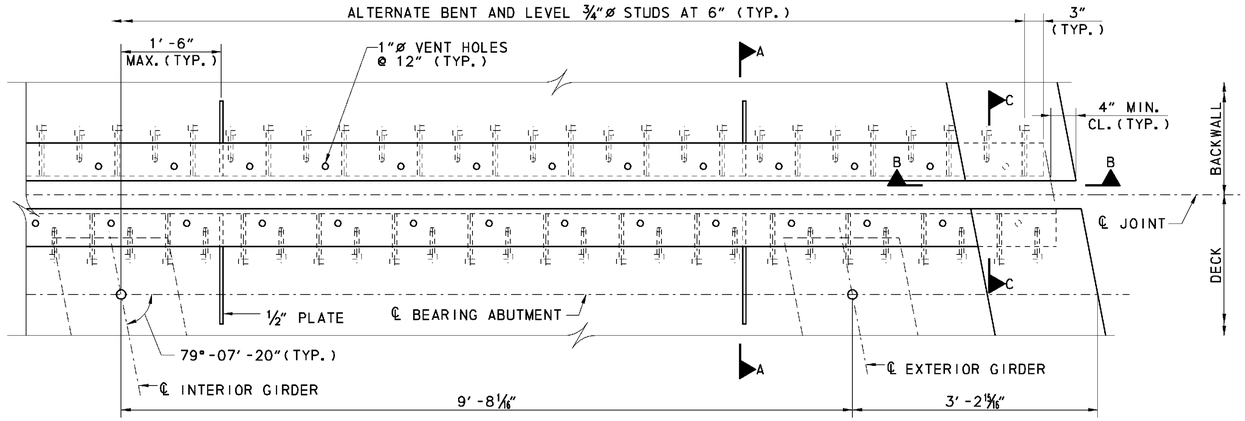

TYPICAL JOINT PLAN

SCALE: 1"=1'-0"

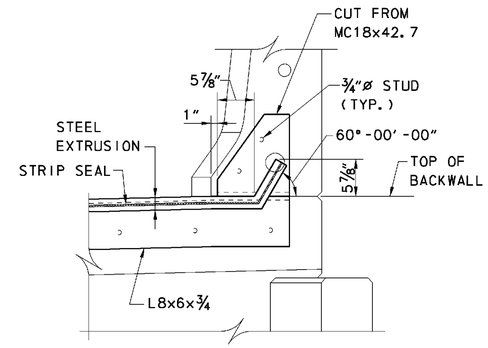

SECTION B-B

SCALE: 1"=1'-0"

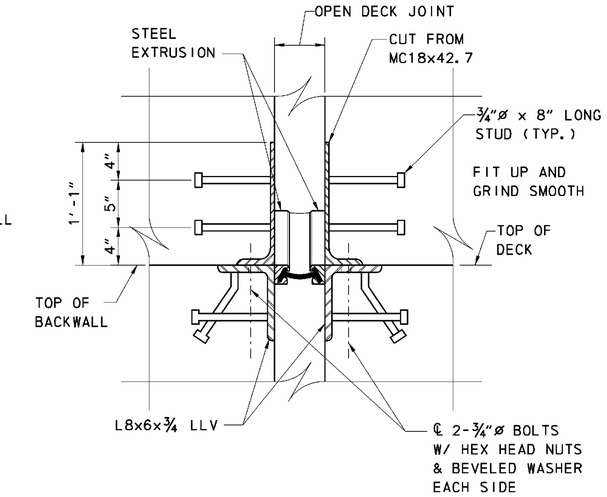

SECTION C-C

SCALE: 1½"=1'-0"

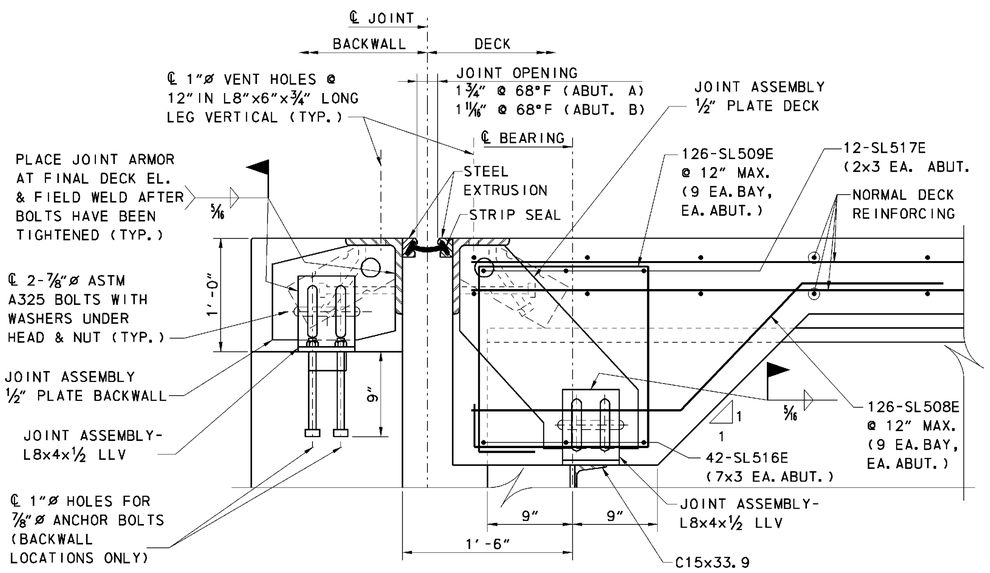

SECTION A-A

SCALE: 1½"=1'-0"

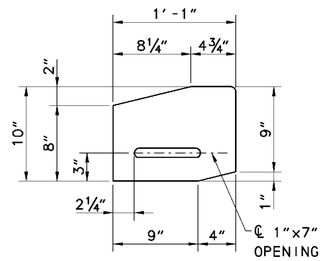

JOINT ASSEMBLY ½" PLATE DETAIL BACKWALL

SCALE: 1½"=1'-0"

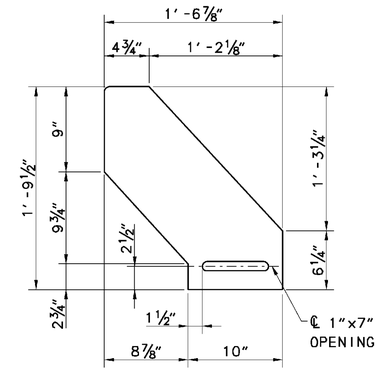

JOINT ASSEMBLY ½" PLATE DETAIL DECK

SCALE: 1½"=1'-0"

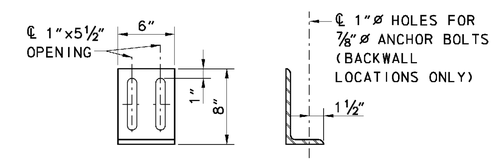

JOINT ASSEMBLY 8"x4"x½" ANGLE DETAIL

SCALE: 1½"=1'-0"

CROSS REFERENCE NOTES:

1. FOR GENERAL PLAN AND ELEVATION, SEE SHEET S7-1.
2. FOR VERTICAL CURVE DATA, SEE SHEET S7-2.
3. FOR TYPICAL SECTION, SEE SHEET S7-3.
4. FOR ABUTMENT A, SEE SHEETS S7-9 AND S7-10.
5. FOR ABUTMENT B, SEE SHEETS S7-11 AND S7-12.
6. FOR FRAMING PLAN AND BEAM DETAILS, SEE SHEETS S7-26 AND S7-29.
7. FOR DECK AND PARAPET DETAILS, SEE SHEET S7-31.
8. FOR FINISHED ROADWAY ELEVATIONS, SEE SHEET S7-32.

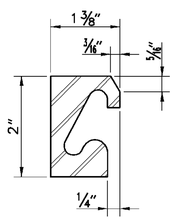

NOTE: THIS EXTRUSION APPLIES TO PREFABRICATED EXPANSION JOINT SYSTEM ONLY.

STEEL EXTRUSION DETAIL

NO SCALE

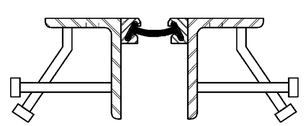

PREFABRICATED EXPANSION JOINT SYSTEM 3"

NO SCALE

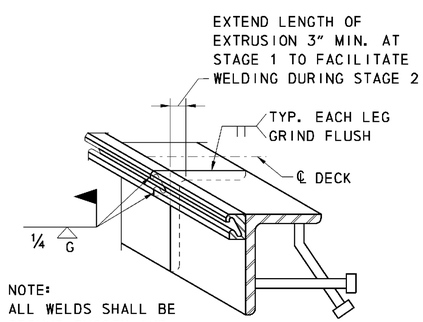

NOTE:
ALL WELDS SHALL BE GROUND SMOOTH AND PAINTED WITH ZINC RICH PAINT

EXTRUSION SPLICE

NO SCALE

NOTES:

1. ALL STEEL SHAPES, BOLTS, STRIP SEALS AND APPURTENANCES SHALL BE PAID FOR UNDER STRIP SEAL EXPANSION JOINTS, 3".
2. JOINT ASSEMBLY MAY BE BURNED TO ALLOW TRANSVERSE DECK REINFORCING TO PASS THROUGH.
3. STEEL FOR DECK JOINTS AND EXTRUSIONS SHALL BE AASHTO M270 GRADE 36.
4. HOLES SHALL BE PLACED IN THE RIB PLATE AND STRAP ANCHOR PLATES FOR BAR REINFORCEMENT. IF THIS IS DONE IN THE FIELD AN APPROVED EPOXY BONDED PAINT SHALL BE USED TO TOUCH UP THE HOLES.

0 ½ 1 2
SCALE: 1"=1'-0"

0 ½ 1 2
SCALE: 1½"=1'-0"

0 ½ 1 2 4
SCALE: ¾"=1'-0"

9/24/2010 2:24:03 PM
M:\PROJECTS\2003\03059_DELTRNPK\SRMALL\CADD\3009004\PLANS\EX01_BR-S7_RAMPR1.DGN

DELAWARE DEPARTMENT OF TRANSPORTATION

ADDENDUMS / REVISIONS

SR1/I-95 INTERCHANGE - CHRISTIANA MALL ROAD BRIDGE

CONTRACT	BRIDGE NO.	1-223
T201009004	DESIGNED BY:	JMS
COUNTY		
NEW CASTLE	CHECKED BY:	JSW

RAMP R1 OVER SR7 DECK DIAPHRAGM AND EXPANSION JOINT DETAILS

S7-33

SHEET NO.
68
TOTAL SHTS.
164

(1) ANY MARK NUMBER WITH SUFFIX 'E' DENOTES EPOXY-COATED REINFORCING STEEL.

(2) BAR MARK PREFIXES INDICATE THE FOLLOWING:

SL = DECK SLAB

PA = BARRIER/PARAPET

NOTE A:
BENDING DIMENSION STOPS AT DECK. BAR LENGTH MUST BE INCREASED ONCE THREADED INSERT DEPTH IS KNOWN.

	SPECIFICATIONS					BENDING DIMENSIONS (FT-INCHES)											
	QTY.	SIZE	LENGTH	MARK	TYPE	A	B	C	D	E	F/R	G	H	J	K	O	
DECK	798	5	38-1 3/4	SL501E	1	0-7	37-6 3/4					0		0-5			
	48	5	VARIES	SL502E	1	0-7	VARIES					0		0-5			B VARIES FROM 60-0 TO 1-9 BY 2-6 3/8
	918	5	8-4 1/4	SL503E	STR	0-7	7-9 1/4							0-5			
	252	5	30-0	SL504E	STR												
	776	5	58-10 7/8	SL505E	STR												
	684	5	7-3 5/8	SL506E	T15	0	2-8	0-8	2-11 3/8	0	1-0		0	1-3	2-8	2-11 5/16	
	918	5	3-1 *	SL507E	17			2-10	0-3 *								* SEE NOTE A
	126	5	7-9 5/16	SL508E	3				2-8 3/4	2-3 13/16	2-8 3/4		1-8 1/16				
	126	5	10-5	SL509E	T2	0-10	2-2 13/16	2-4 11/16	2-2 13/16	2-4 11/16		0-10					
	252	5	46-3 1/2	SL510E	STR												
	32	5	VARIES	SL511E	STR												VARIES FROM 60-0 TO 1-9 BY 3-10
	8	5	VARIES	SL512E	STR												VARIES FROM 33-8 9/16 TO 26-0 7/16 BY 2-6 11/16
	3	5	VARIES	SL513E	STR												VARIES FROM 39-3 9/16 TO 31-0 5/8 BY 4-1 7/16
	3	5	VARIES	SL514E	STR												VARIES FROM 28-10 TO 15-7 1/8 BY 4-1 7/16
	20	5	58-2 1/8	SL515E	STR												
	42	5	9-4	SL516E	1	0-7	8-2					0-7		0-5			
	12	5	38-0 3/16	SL517E	STR												
	184	6	33-9	SL601E	STR												
	684	5	6-1 1/8	PA501E	H1	0-7	3-0	0-8 5/8	3-0 3/16	0-5		0-7	3-0		0-3 5/8		
	16	5	58-0 1/4	PA507E	STR												
	32	7	58-4	PA701E	STR												
	32	8	59-4 3/4	PA801E	STR												

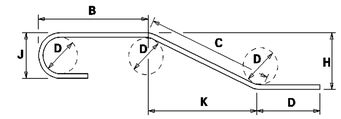

NOTES:
1. FIGURES SHOWN IN CIRCLES REPRESENT BAR BEND TYPES.
2. STANDARD BAR BENDS INCLUDE ONLY TYPES 1-32, S1-S12, AND T1-T16.
3. ALL DIMENSIONS ARE OUT-TO-OUT OF BAR EXCEPT "A" AND "G" ON STANDARD 180° AND 135° HOOKS.
4. "J" DIMENSIONS ON 180° HOOKS TO BE SHOWN ONLY WHERE NECESSARY TO RESTRICT HOOK SIZE, OTHERWISE STANDARD HOOKS ARE TO BE USED.
5. WHERE "J" IS NOT SHOWN, "J" WILL BE KEPT EQUAL TO OR LESS THAN "H" ON TRUSS BARS. WHERE "J" CAN EXCEED "H", IT SHALL BE SHOWN.
6. "H" DIMENSIONS OF STIRRUPS TO BE SHOWN WHERE NECESSARY TO FIT WITHIN THE CONCRETE.
7. UNLESS OTHERWISE NOTED, DIAMETER "D" IS THE SAME FOR ALL BENDS AND HOOKS ON A BAR.
8. WHERE SLOPE DIFFERS FROM 45° OFFSET, "H" AND "K" MUST BE SHOWN.
9. WHERE BARS ARE TO BE BENT MORE ACCURATELY THAN STANDARD BENDING TOLERANCES, BENDING DIMENSIONS WHICH REQUIRE CLOSER FABRICATION SHOULD HAVE LIMITS INDICATED.
10. FOR RECOMMENDED DIAMETER "D", OF BENDS, HOOKS, ETC., REFER TO TABLE AT RIGHT, 'CRSI' OR 'ACI' TABLES.
11. TYPE S1-S12, T1-T16 APPLY TO BAR SIZES 3 THROUGH 6.

ASTM STANDARD ENGLISH REINFORCING BARS				RECOMMENDED END HOOKS, APPLICABLE TO ALL GRADES			
	NOMINAL DIMENSIONS				180° HOOKS		90° HOOKS
BAR SIZE	DIAMETER (inches)	AREA (inches²)	WEIGHT (lbs./ft.)	D	A OR G	J	A OR G
3	0.375	0.110	0.376	2"	5"	3"	6"
4	0.500	0.200	0.668	3"	6"	4"	8"
5	0.625	0.310	1.043	3"	7"	5"	10"
6	0.750	0.440	1.502	4"	8"	6"	1'-0"
7	0.875	0.600	2.044	5"	10"	7"	1'-2"
8	1.000	0.790	2.670	6"	11"	8"	1'-4"
9	1.128	1.000	3.400	9"	1'-3"	11"	1'-7"
10	1.270	1.270	4.303	10"	1'-5"	1'-1"	1'-10"
11	1.410	1.560	5.313	1'-0"	1'-7"	1'-2"	2'-0"
14	1.693	2.250	7.650	1'-6"	2'-3"	1'-9"	2'-7"
18	2.257	4.000	13.600	2'-0"	3'-0"	2'-4"	3'-5"

STANDARD BAR BENDS

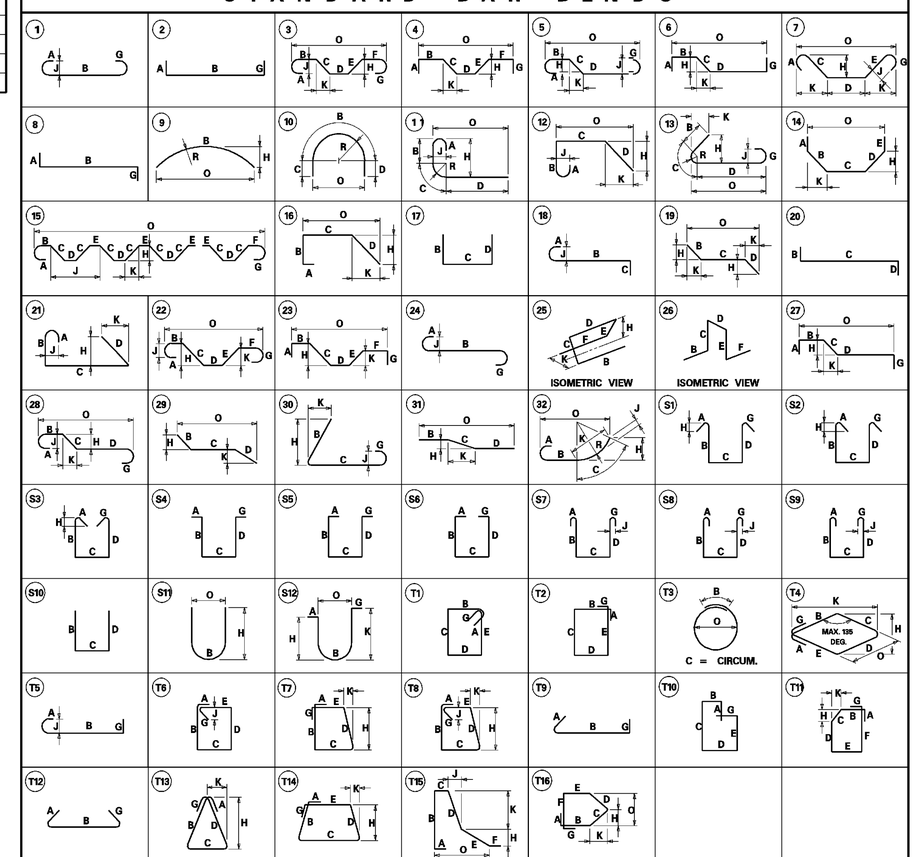

SPECIAL BAR BENDS

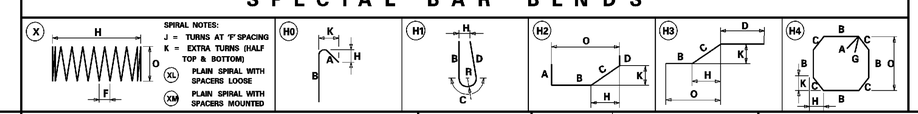

DELAWARE DEPARTMENT OF TRANSPORTATION	ADDENDUMS / REVISIONS	SR1/I-95 INTERCHANGE - CHRISTIANA MALL ROAD BRIDGE	CONTRACT T201009004 / COUNTY NEW CASTLE	BRIDGE NO. 1-223 / DESIGNED BY: JMS / CHECKED BY: JSW	RAMP R1 OVER SR7 REINFORCING BAR LIST DECK	S7-34 / SHEET NO. 69 / TOTAL SHTS. 164

9/27/2010 8:31:21 AM
M:\PROJECTS\2003\03059_DELTRNPK\SRTMALL\CADD\3009004\PLANS\BR05_BR-S7_RAMPR1.DGN

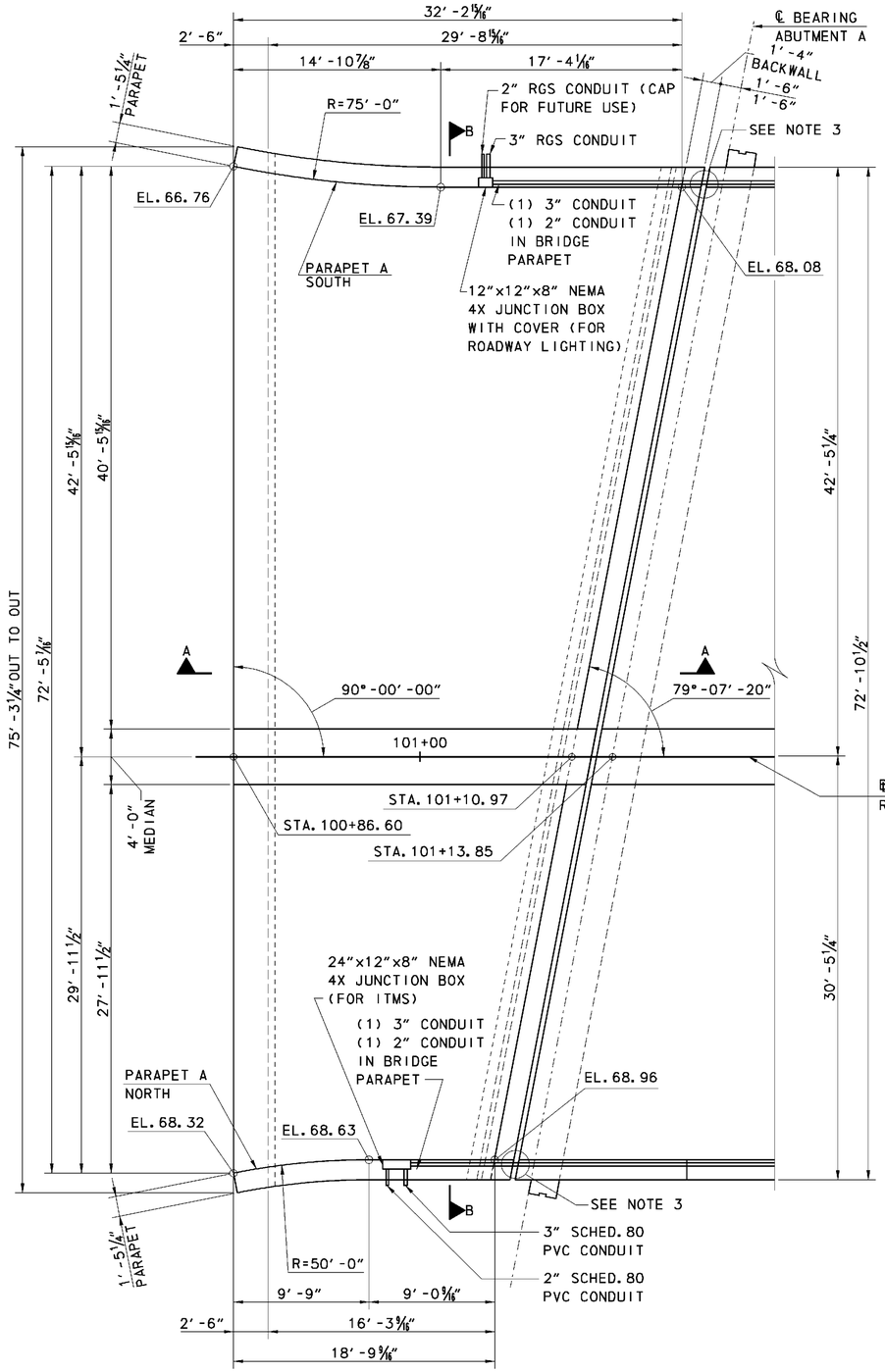

APPROACH SLAB A PLAN

SCALE: 3/16″=1′-0″

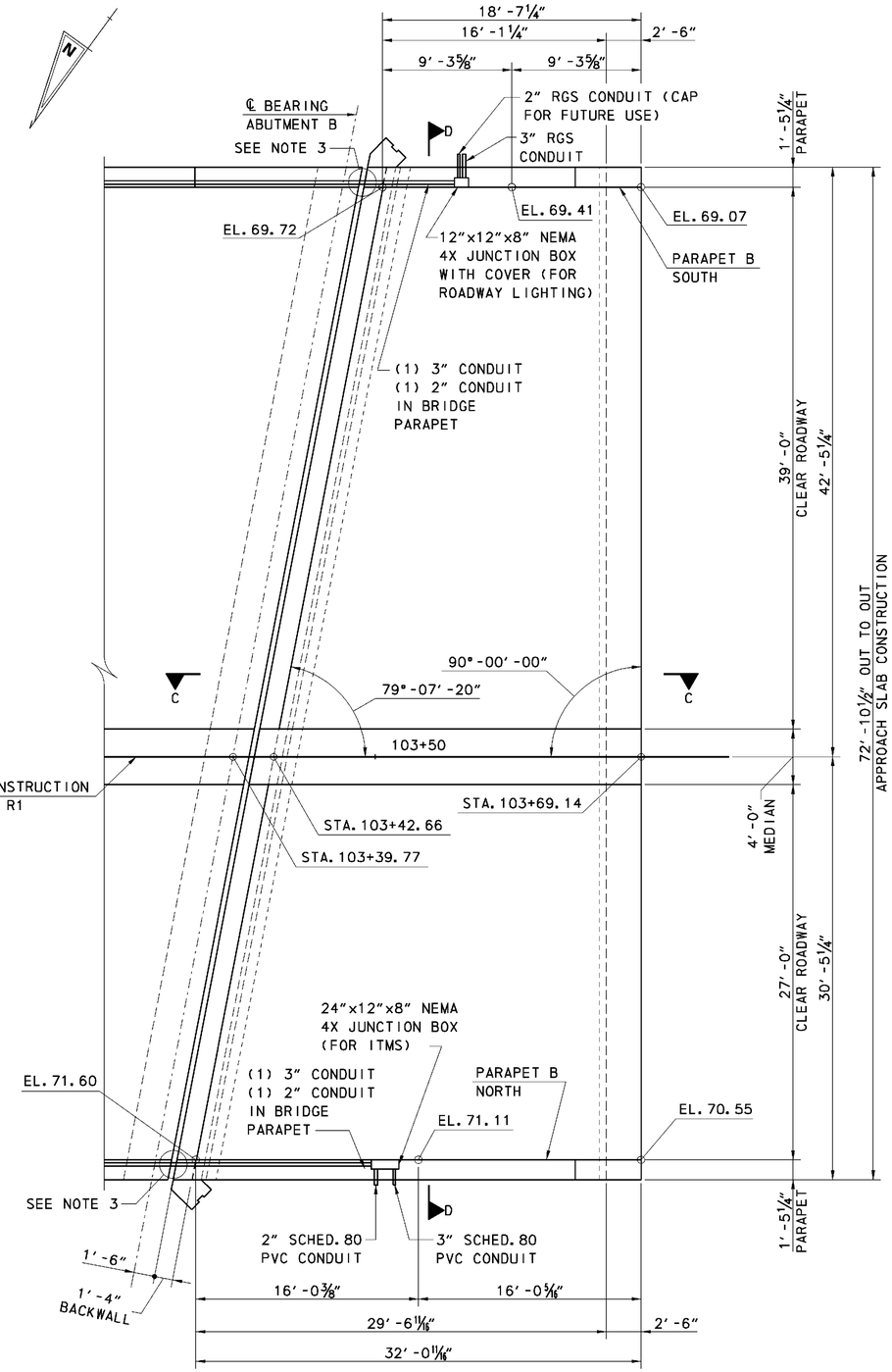

APPROACH SLAB B PLAN

SCALE: 3/16″=1′-0″

NOTES:

1. NO CONCRETE DESIGNATED TO BE PAID FOR UNDER "APPROACH SLAB" ITEM IS TO BE PLACED UNTIL AFTER THE ABUTMENT BACKWALL SECTION ABUTING THAT PARTICULAR APPROACH SLAB HAS BEEN COMPLETELY PLACED.
2. ALL APPROACH SLAB CONCRETE SHALL BE FINISHED ONLY BY A DEPARTMENT APPROVED MECHANICAL FINISHING MACHINE SUPPORTED ON SCREED RAILS OR CONTROLLED BY STRING LINES AND SENSORS.
3. PROVIDE CONDUIT EXPANSION/DEFLECTION FITTINGS ON ALL CONDUITS CROSSING OPEN JOINTS ON THE BRIDGE. PROVIDE CONDUIT EXPANSION FITTINGS ON ALL CONDUITS CROSSING EXPANSION JOINTS ON THE BRIDGE.

CROSS REFERENCE NOTES:

1. FOR APPROACH SLAB REINFORCING DETAILS, SEE SHEETS S7-36 TO S7-38.
2. FOR APPROACH SLAB PARAPET REINFORCING DETAILS, SEE SHEET S7-39.
3. FOR SECTIONS B-B AND D-D, SEE SHEET S7-38.
4. FOR SECTIONS A-A AND C-C, SEE SHEET S7-37.
5. FOR CONDUIT DETAILS, SEE LIGHTING PLANS.

0 2 4 8 16

SCALE: 3/16″=1′-0″

8/19/2010 12:49:24 PM
M:\PROJECTS\2003\03059_DELTRNPK\SRMALL\CADD\3009004\PLANS\AS01_BR-S7_RAMPR1.DGN

DELAWARE DEPARTMENT OF TRANSPORTATION	ADDENDUMS / REVISIONS	SR1/I-95 INTERCHANGE - CHRISTIANA MALL ROAD BRIDGE	CONTRACT T201009004	BRIDGE NO. 1-223	RAMP R1 OVER SR7 APPROACH SLAB GENERAL PLANS	S7-35
			COUNTY NEW CASTLE	DESIGNED BY: JMS		SHEET NO. 70
				CHECKED BY: JSW		TOTAL SHTS. 164

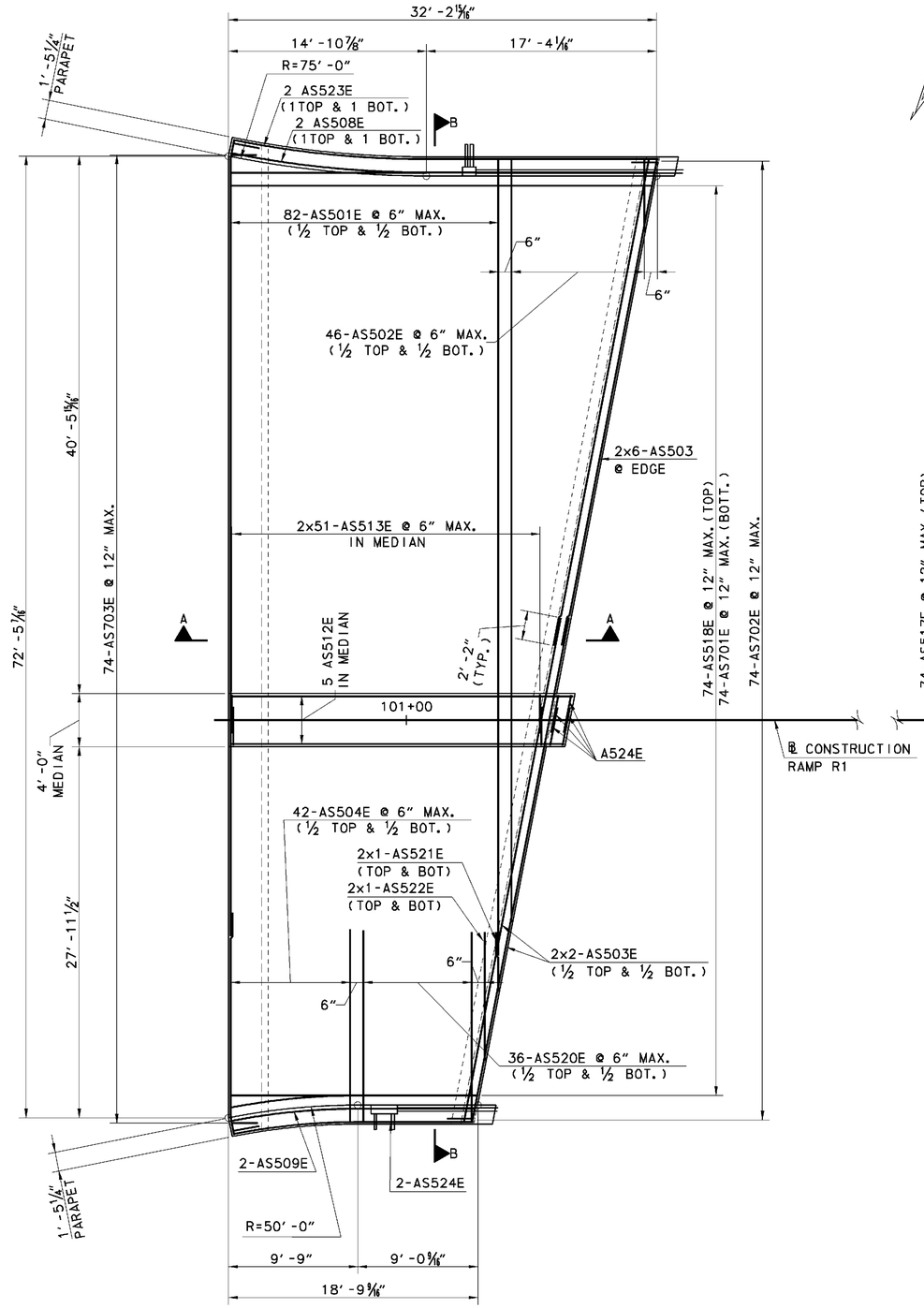

APPROACH SLAB A REINFORCING PLAN

SCALE: 3/16" = 1' -0"

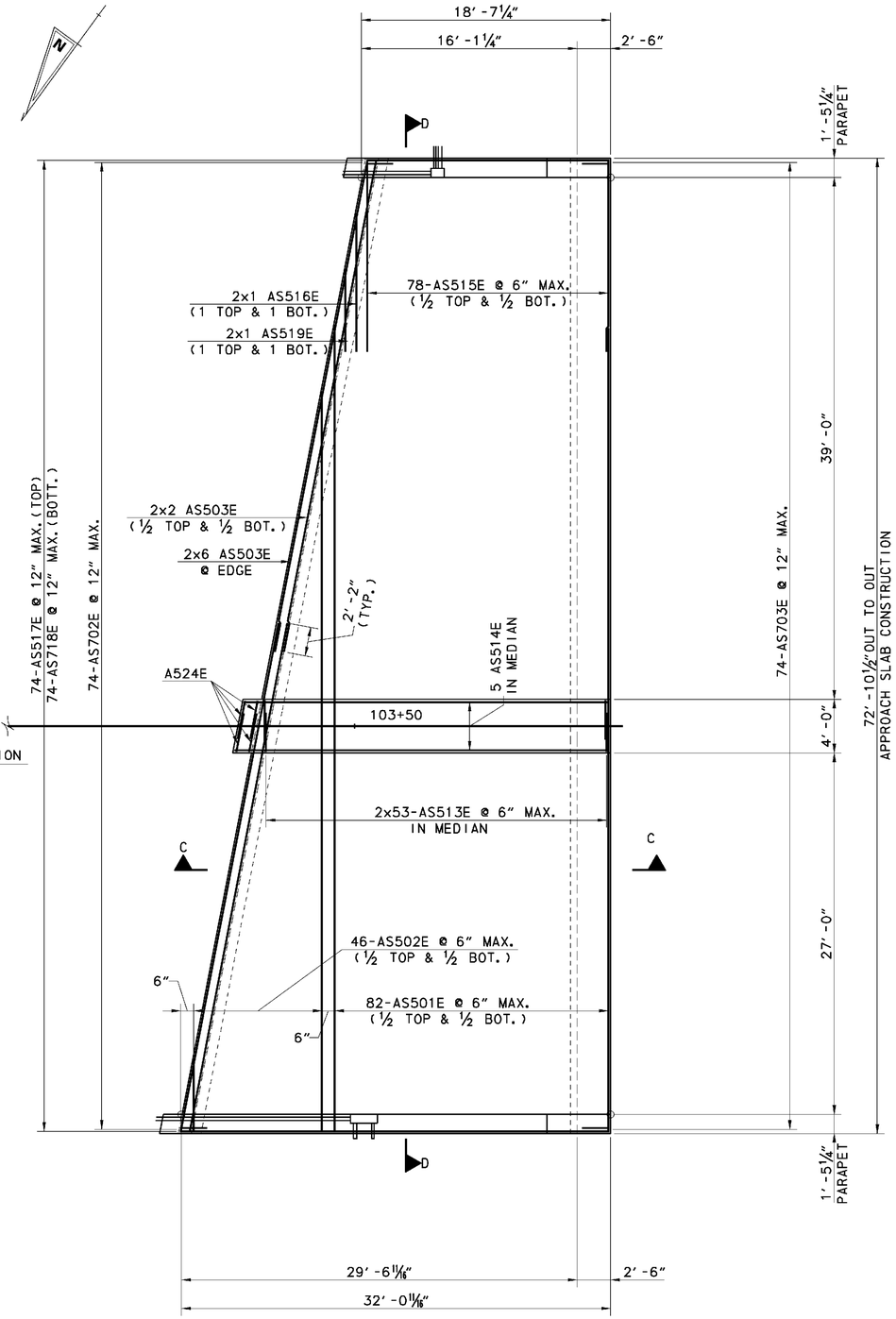

APPROACH SLAB B REINFORCING PLAN

SCALE: 3/16" = 1' -0"

NOTES:

1. NO CONCRETE DESIGNATED TO BE PAID FOR UNDER "APPROACH SLAB" ITEM IS TO BE PLACED UNTIL AFTER THE ABUTMENT BACKWALL SECTION ABUTING THAT PARTICULAR APPROACH SLAB HAS BEEN COMPLETELY PLACED.
2. ALL APPROACH SLAB CONCRETE SHALL BE FINISHED ONLY BY A DEPARTMENT APPROVED MECHANICAL FINISHING MACHINE SUPPORTED ON SCREED RAILS OR CONTROLLED BY STRING LINES AND SENSORS.

CROSS REFERENCE NOTES:

1. FOR APPROACH SLAB PARAPET REINFORCING DETAILS, SEE SHEET S7-39.
2. FOR SECTIONS B-B AND D-D, SEE SHEET S7-38.
3. FOR SECTIONS A-A AND C-C, SEE SHEET S7-37.

0 4 16
2 8
SCALE: 3/16" = 1' -0"

9/24/2010 2:32:51 PM
M:\PROJECTS\2003\03059_DELTRNPK\SRMALL\CADD\3009004\PLANS\AS02_BR-S7_RAMPR1.DGN

DELAWARE DEPARTMENT OF TRANSPORTATION	ADDENDUMS / REVISIONS		SR1/I-95 INTERCHANGE - CHRISTIANA MALL ROAD BRIDGE	CONTRACT T201009004	BRIDGE NO. 1-223	RAMP R1 OVER SR7 APPROACH SLAB REINFORCING PLANS	S7-36 SHEET NO. 71
				COUNTY NEW CASTLE	DESIGNED BY: JMS		TOTAL SHTS. 164
					CHECKED BY: JSW		

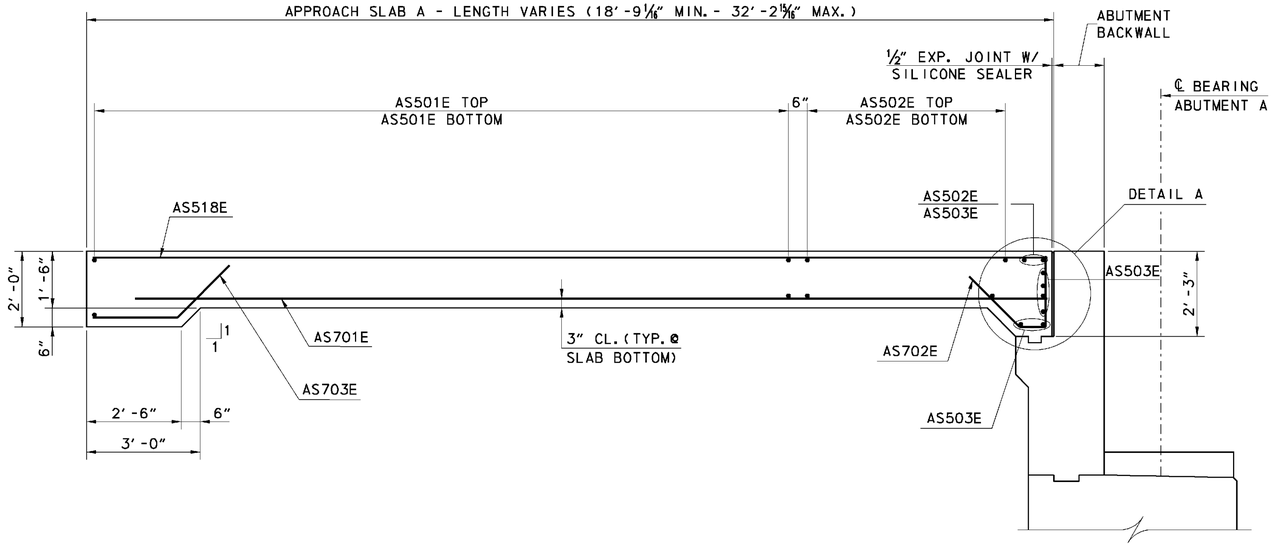

SECTION A-A

SCALE: 1/2" = 1'-0"

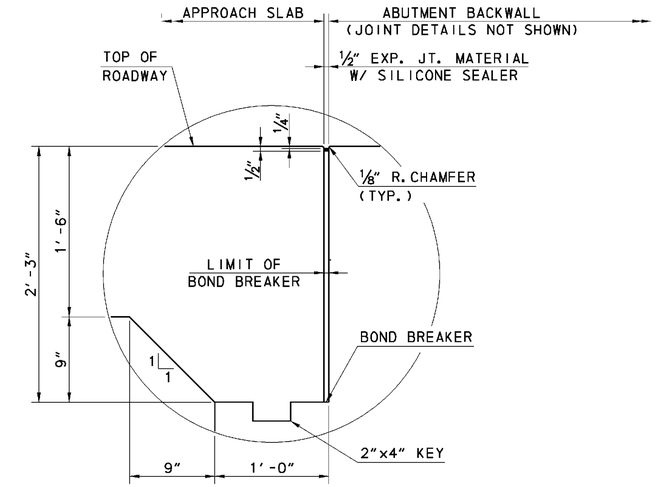

DETAIL A

(ABUTMENT B SIMILAR BUT OPPOSITE HAND)
SCALE: 1 1/2" = 1'-0"

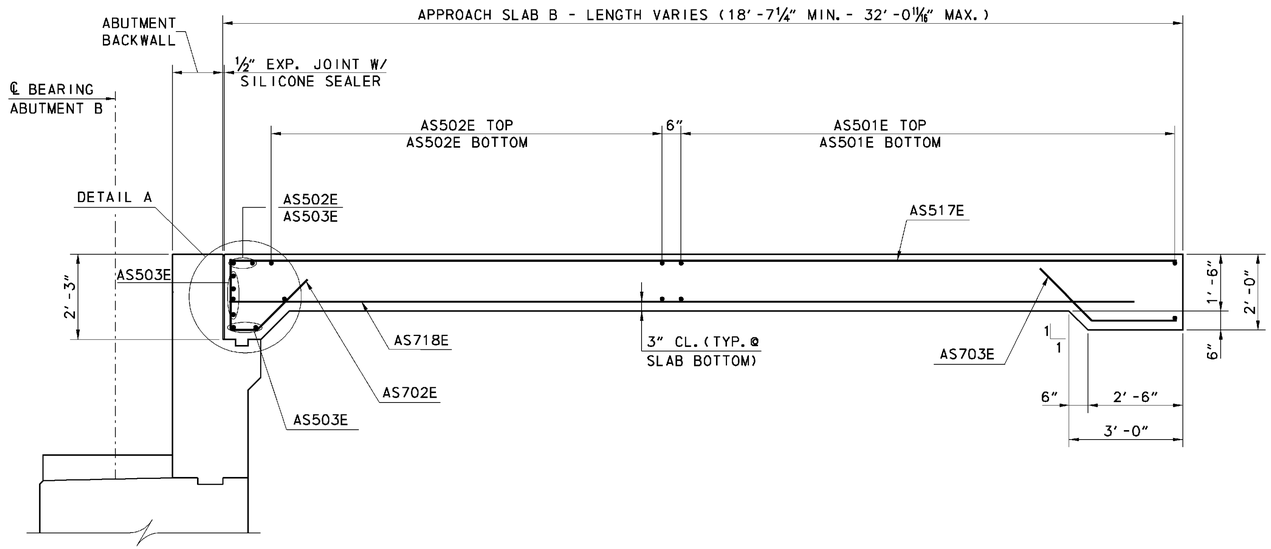

SECTION C-C

SCALE: 1/2" = 1'-0"

NOTES:

1. ALL JOINTS THAT ARE TO BE SEALED SHALL BE FREE OF CRACKED AND SPALLED AREAS AND THIER FACES SHALL BE FREE OF ALL FORIEGN MATTER, CURING COMPOUNDS, OILS, GREASES AND DIRT. ALL FACES MUST BE SANDBLASTED OR BRUSHED WITH A MECHANICAL ROTARY WIRE BRUSH. JUST PRIOR TO SEALING THE JOINT SHALL BE BLOWN OUT WITH OIL-FREE COMPRESSED AIR.

CROSS REFERENCE NOTES:

1. FOR ABUTMENT BACKWALL DETAILS, SEE SHEETS S7-9 TO S7-12.
2. FOR ABUTMENT JOINT DETAILS, SEE SHEET S7-33.
3. FOR APPROACH SLAB REINFORCING, SEE SHEET S7-36.

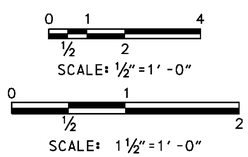

DELAWARE DEPARTMENT OF TRANSPORTATION	ADDENDUMS / REVISIONS	SR1/I-95 INTERCHANGE - CHRISTIANA MALL ROAD BRIDGE	CONTRACT T201009004	BRIDGE NO. 1-223	RAMP R1 OVER SR7 APPROACH SLAB DETAILS 1	S7-37 SHEET NO. 72
			COUNTY NEW CASTLE	DESIGNED BY: JMS		TOTAL SHTS. 164
				CHECKED BY: JSW		

8/19/2010 12:58:03 PM
M:\PROJECTS\2003\03059_DELTRNPK\SRTMALL\CADD\3009004\PLANS\AS03_BR-S7_RAMPR1.DGN

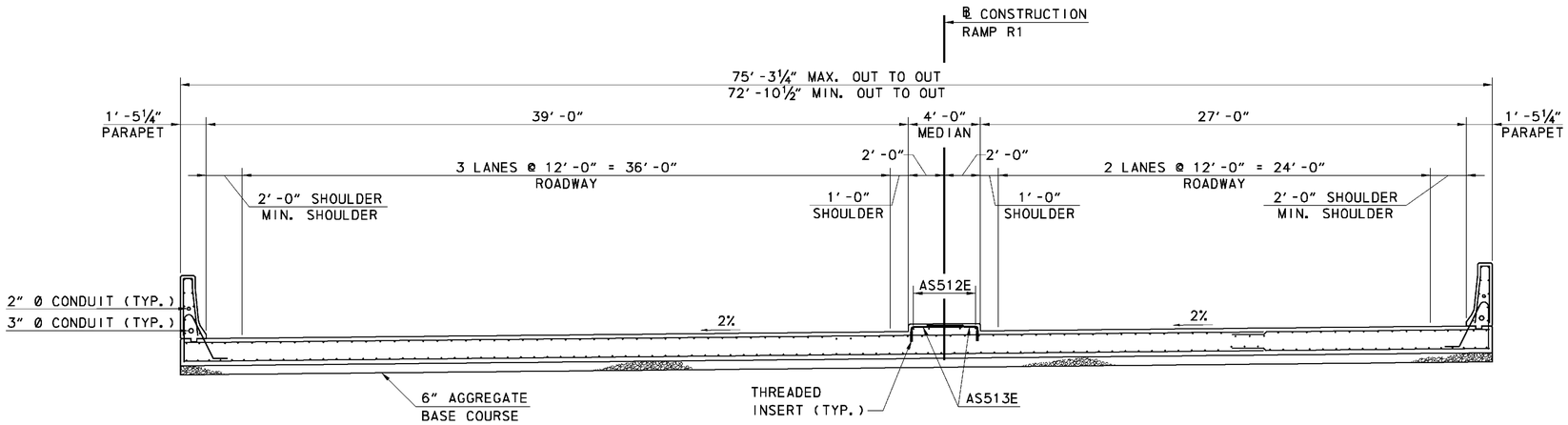

SECTION B-B

SCALE: ¼"=1'-0"

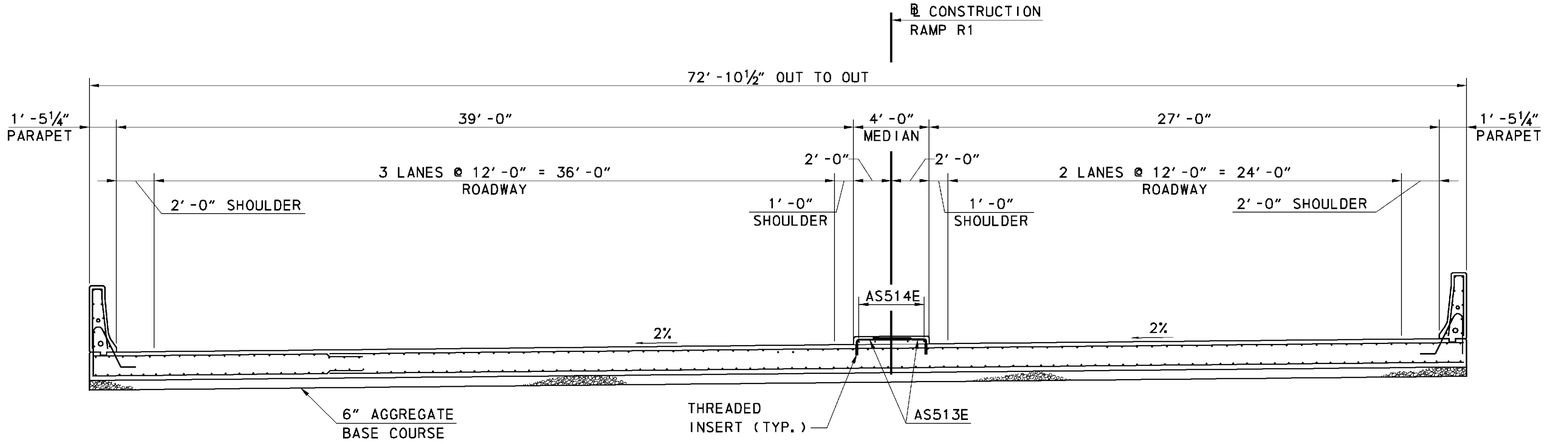

SECTION D-D

SCALE: ¼"=1'-0"

CROSS REFERENCE NOTES:

1. FOR APPROACH SLAB DIMENSIONS, SEE SHEET S7-35.
2. FOR REINFORCING DETAILS, SEE SHEETS S7-36 AND S7-37.
3. FOR PARAPET REINFORCING, SEE SHEET S7-39.

0 2 8
1 4
SCALE: ¼"=1'-0"

9/24/2010 2:34:29 PM
M:\PROJECTS\2003\03059_DELTRNPK\SRIMALL\CADD\3009004\PLANS\AS04_BR-S7_RAMPR1.DGN

DELAWARE DEPARTMENT OF TRANSPORTATION	ADDENDUMS / REVISIONS		SR1/I-95 INTERCHANGE - CHRISTIANA MALL ROAD BRIDGE	CONTRACT T201009004	BRIDGE NO. 1-223	RAMP R1 OVER SR7 APPROACH SLAB DETAILS 2	S7-38
				COUNTY NEW CASTLE	DESIGNED BY: JMS		SHEET NO. 73
					CHECKED BY: JSW		TOTAL SHTS. 164

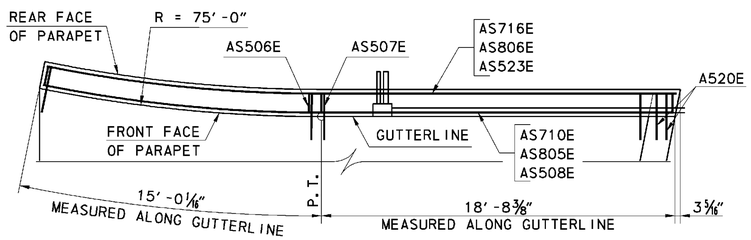

PLAN

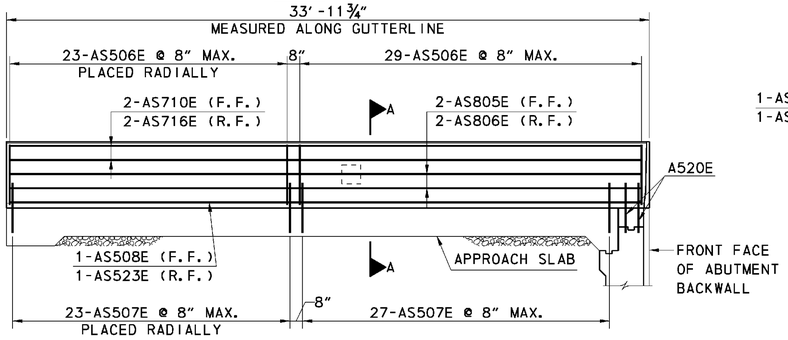

ELEVATION
PARAPET A-SOUTH

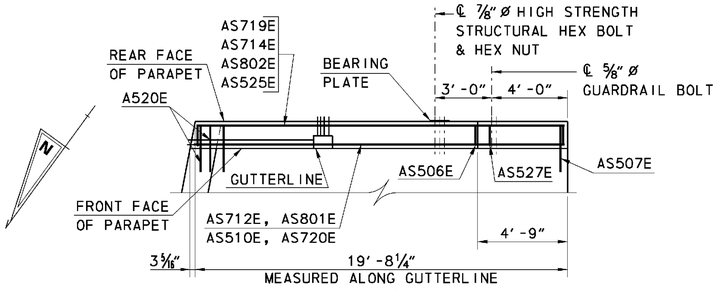

PLAN

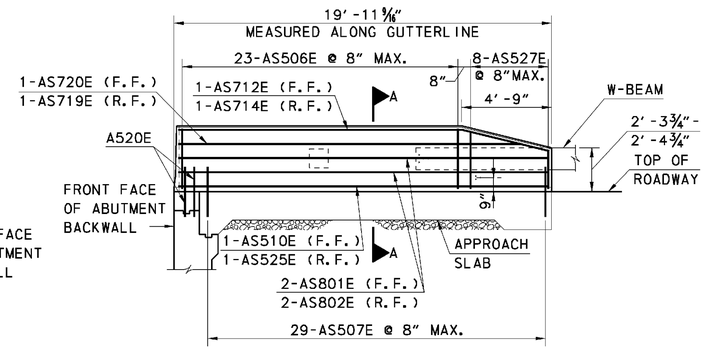

ELEVATION
PARAPET B-SOUTH

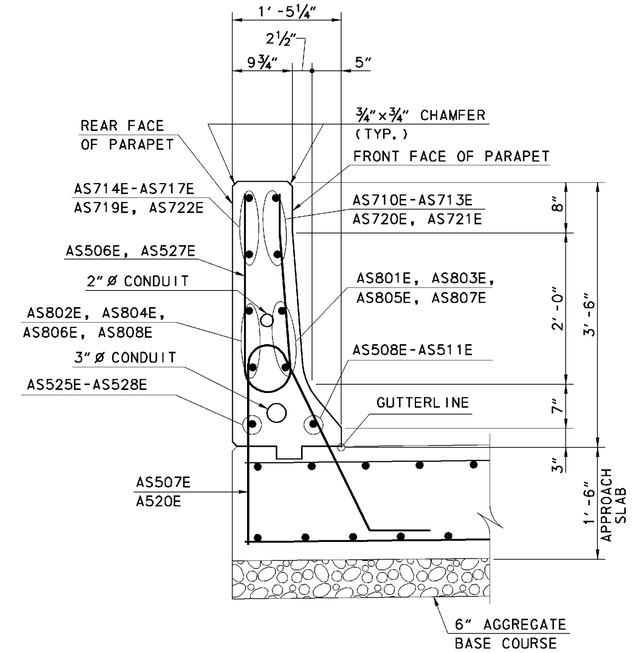

SECTION A-A

SCALE: 1"=1'-0"

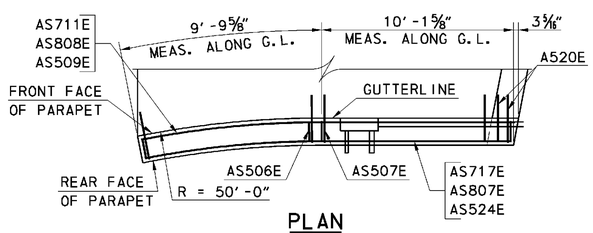

PLAN

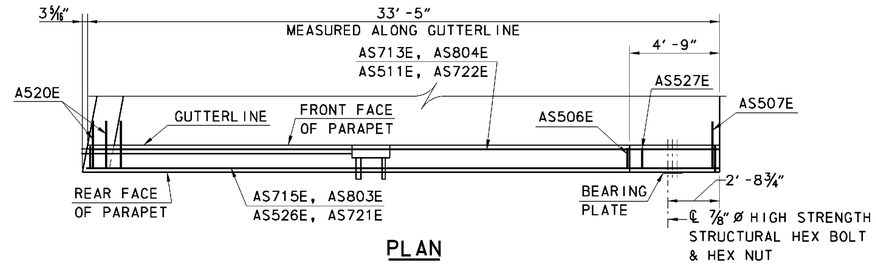

PLAN

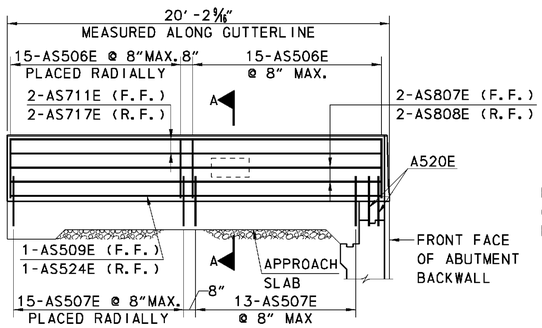

ELEVATION
PARAPET A-NORTH

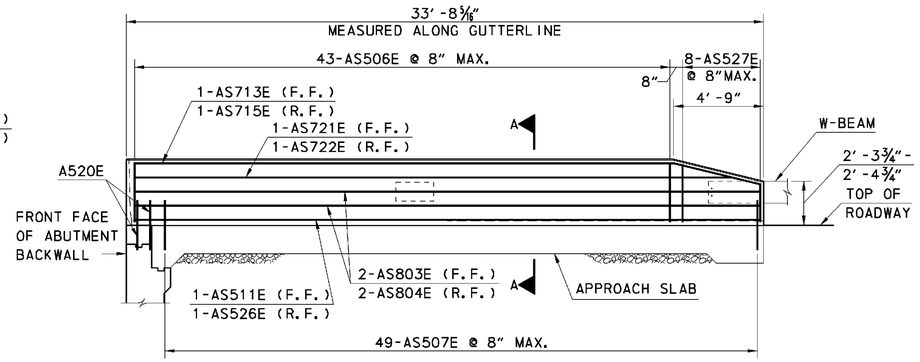

ELEVATION
PARAPET B-NORTH

APPROACH SLAB PARAPET DETAILS

SCALE: 1/4"=1'-0"

CROSS REFERENCE NOTES:
1. FOR APPROACH SLAB REINFORCING, SEE SHEETS S7-36 TO S7-38.

0 2 8
1 4
SCALE: 1/4"=1'-0"

0 1
1/2 2
SCALE: 1"=1'-0"

8/19/2010 1:06:51 PM
M:\PROJECTS\2003\03059_DELTRNPK\SRMALL\CADD\3009004\PLANS\AS05_BR-S7_RAMPR1.DGN

DELAWARE DEPARTMENT OF TRANSPORTATION	ADDENDUMS / REVISIONS	SR1/I-95 INTERCHANGE - CHRISTIANA MALL ROAD BRIDGE	CONTRACT T201009004	BRIDGE NO. 1-223	RAMP R1 OVER SR7 APPROACH SLAB PARAPET REINFORCING DETAILS	SHEET NO. 74	S7-39
			COUNTY NEW CASTLE	DESIGNED BY: JMS		TOTAL SHTS. 164	
				CHECKED BY: JSW			

(1) ANY MARK NUMBER WITH SUFFIX 'E' DENOTES EPOXY-COATED REINFORCING STEEL.

(2) BAR MARK PREFIXES INDICATE THE FOLLOWING:

AS = APPROACH SLAB

NOTE A:
BENDING DIMENSION STOPS AT DECK. BAR LENGTH MUST BE INCREASED ONCE THREADED INSERT DEPTH IS KNOWN.

APPROACH SLAB

SPECIFICATIONS					BENDING DIMENSIONS (FT-INCHES)											
QTY.	SIZE	LENGTH	MARK	TYPE	A	B	C	D	E	F/R	G	H	J	K	O	
164	5	60-0	AS501E	STR												
92	5	VARIES	AS502E	STR												VARIES FROM 57-6 3/16 TO 5-6 1/4 BY 2-4 3/8
32	5	38-0 1/4	AS503E	STR												
42	5	VARIES	AS504E	STR												VARIES FROM 17-6 TO 14-6 BY 0-1 3/16
148	5	6-1 1/8	AS506E	H1		2-6	1-1	2-6 1/8		0-4		0-6				
156	5	7-3 5/8	AS507E	T15	0	2-8	0-8	2-11 3/8	0	1-0		0	1-3	2-8	2-11 5/16	
3	5	33-4 7/16	AS508E	10		14-10	18-6 3/8	0		74-10						
3	5	19-10 9/16	AS509E	10		9-7 5/8	10-3	0		49-10						
1	5	19-7 9/16	AS510E	STR												
1	5	31-1	AS511E	STR												
5	5	VARIES	AS512E	STR												VARIES FROM 25-2 TO 25-10 13/16 BY 0-2 3/16
208	5	3-1 *	AS513E	17			2-10	0-3 *								* SEE NOTE A
5	5	VARIES	AS514E	STR												VARIES FROM 27-3 7/16 TO 28-0 3/16 BY 0-2 3/16
78	5	14-6	AS515E	STR												
2	5	10-1 7/16	AS516E	STR												
74	5	VARIES	AS517E	STR												VARIES FROM 18-3 1/4 TO 31-8 11/16 BY 0-2 3/16
74	5	VARIES	AS518E	STR												VARIES FROM 18-5 9/16 TO 32-3 BY 0-2 1/4
2	5	5-10 1/2	AS519E	STR												
36	5	14-6	AS520E	STR												
2	5	4-0	AS521E	STR												
2	5	9-7 1/4	AS522E	STR												
3	5	33-8 3/16	AS523E	10		14-10	18-10 3/16	0		73-8 13/16						
3	5	19-7 1/4	AS524E	10		9-7 5/16	9-11 7/8	0		48-8 13/16						
1	5	19-4 1/4	AS525E	STR												
1	5	31-11 1/2	AS526E	STR												
16	5	VARIES	AS527E	H1		VARIES	1-1	VARIES		0-4		0-6				B VARIES FROM 1-3 3/4 TO 2-6 BY 0-2 1/4 D VARIES FROM 1-3 7/8 TO 2-6 1/8 BY 0-2 1/4
74	7	VARIES	AS701E	STR												VARIES FROM 17-0 TO 30-9 BY 0-2 1/4
148	7	4'-2 3/4	AS702E	16		1-9 9/16	0-8	1-9 1/4				1-3		1-3		
148	7	4-1 5/16	AS703E	16	0	0	2-2	1-11 5/16				1-4 1/2		1-4 1/2		
2	7	33-4 7/16	AS710E	10		14-10	18-6 3/8	0		74-10						
2	7	19-10 9/16	AS711E	10		9-7 5/8	10-3	0		49-10						
1	7	14-10 3/4	AS712E	STR												
1	7	28-4	AS713E	STR												
1	7	14-7 1/4	AS714E	STR												
1	7	27-2 1/2	AS715E	STR												
2	7	33-8 3/16	AS716E	10		14-10	18-10 3/16	0		73-8 13/16						
2	7	19-7 1/4	AS717E	10		9-7 5/16	9-11 7/8	0		48-8 13/16						
74	7	VARIES	AS718E	STR												VARIES FROM 16-9 1/4 TO 30-2 11/16 BY 0-2 3/16
1	7	16-11 3/4	AS719E	STR												
1	7	17-3 1/2	AS720E	STR												
1	7	29-7	AS721E	STR												
1	7	30-8 1/2	AS722E	STR												
2	8	19-7 9/16	AS801E	STR												
2	8	19-4 1/4	AS802E	STR												
2	8	31-11 1/2	AS803E	STR												
2	8	33-1	AS804E	STR												
2	8	33-4 7/16	AS805E	10		14-10	18-6 3/8	0		74-10						
2	8	33-8 3/16	AS806E	10		14-10	18-10 3/16	0		73-8 13/16						
2	8	19-7 1/4	AS807E	10		9-7 5/16	9-11 7/8	0		48-8 13/16						
2	8	19-7 9/16	AS808E	10		9-7 5/8	10-3	0		49-10						

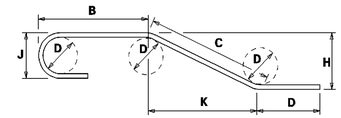

NOTES:
1. FIGURES SHOWN IN CIRCLES REPRESENT BAR BEND TYPES.
2. STANDARD BAR BENDS INCLUDE ONLY TYPES 1-32, S1-S12, AND T1-T16.
3. ALL DIMENSIONS ARE OUT-TO-OUT OF BAR EXCEPT "A" AND "G" ON STANDARD 180° AND 135° HOOKS.
4. "J" DIMENSIONS ON 180° HOOKS TO BE SHOWN ONLY WHERE NECESSARY TO RESTRICT HOOK SIZE, OTHERWISE STANDARD HOOKS ARE TO BE USED.
5. WHERE "J" IS NOT SHOWN, "J" WILL BE KEPT EQUAL TO OR LESS THAN "H" ON TRUSS BARS. WHERE "J" CAN EXCEED "H", IT SHALL BE SHOWN.
6. "H" DIMENSIONS OF STIRRUPS TO BE SHOWN WHERE NECESSARY TO FIT WITHIN THE CONCRETE.
7. UNLESS OTHERWISE NOTED, DIAMETER "D" IS THE SAME FOR ALL BENDS AND HOOKS ON A BAR.
8. WHERE SLOPE DIFFERS FROM 45° OFFSET, "H" AND "K" MUST BE SHOWN.
9. WHERE BARS ARE TO BE BENT MORE ACCURATELY THAN STANDARD BENDING TOLERANCES, BENDING DIMENSIONS WHICH REQUIRE CLOSER FABRICATION SHOULD HAVE LIMITS INDICATED.
10. FOR RECOMMENDED DIAMETER "D", OF BENDS, HOOKS, ETC., REFER TO TABLE AT RIGHT, 'CRSI' OR 'ACI' TABLES.
11. TYPE S1-S12, T1-T16 APPLY TO BAR SIZES 3 THROUGH 6.

ASTM STANDARD ENGLISH REINFORCING BARS				RECOMMENDED END HOOKS, APPLICABLE TO ALL GRADES			
NOMINAL DIMENSIONS					180° HOOKS		90° HOOKS
BAR SIZE	DIAMETER (inches)	AREA (inches²)	WEIGHT (lbs./ft.)	D	A OR G	J	A OR G
3	0.375	0.110	0.376	2"	5"	3"	6"
4	0.500	0.200	0.668	3"	6"	4"	8"
5	0.625	0.310	1.043	3"	7"	5"	10"
6	0.750	0.440	1.502	4"	8"	6"	1'-0"
7	0.875	0.600	2.044	5"	10"	7"	1'-2"
8	1.000	0.790	2.670	6"	11"	8"	1'-4"
9	1.128	1.000	3.400	9"	1'-3"	11"	1'-7"
10	1.270	1.270	4.303	10"	1'-5"	1'-1"	1'-10"
11	1.410	1.560	5.313	1'-0"	1'-7"	1'-2"	2'-0"
14	1.693	2.250	7.650	1'-6"	2'-3"	1'-9"	2'-7"
18	2.257	4.000	13.600	2'-0"	3'-0"	2'-4"	3'-5"

STANDARD BAR BENDS

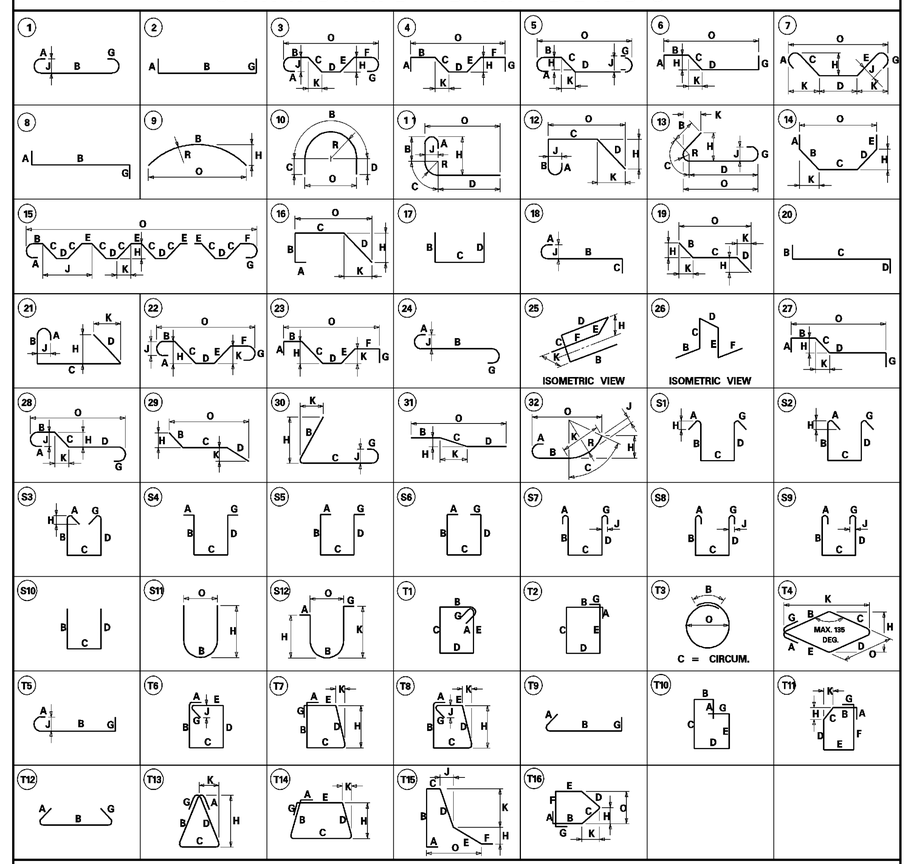

SPECIAL BAR BENDS

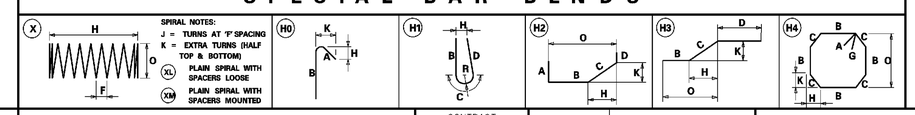

DELAWARE DEPARTMENT OF TRANSPORTATION

ADDENDUMS / REVISIONS

SR1 / I-95 INTERCHANGE - CHRISTIANA MALL ROAD BRIDGE

CONTRACT	BRIDGE NO.	1-223
T201009004	DESIGNED BY:	JMS
COUNTY	CHECKED BY:	JSW
NEW CASTLE		

RAMP R1 OVER SR7
REINFORCING BAR LIST
APPROACH SLAB

S7-40

SHEET NO.
75
TOTAL SHTS.
164

9/27/2010 8:25:07 AM
M:\PROJECTS\2003\03059_DELTRNPK\SR1MALL\CADD\3009004\PLANS\BR06_BR-S7_RAMPR1.DGN

SUMMARY OF LABORATORY TEST RESULTS OF TUBE SAMPLES

BORING NO.	TOP SAMPLE DEPTH (FT)	NATURAL MOISTURE CONTENT (%)	LL	PL	PI	PERCENT PASSING NO. 200	AASHTO	UNDISTURBED TUBE TESTING	TOTAL UNIT WEIGHT (pcf)	UNCONFINED COMPRESSION (psf)	TOTAL STRESS COHESION (psf)	TOTAL STRESS FRICTION ANGLE (deg)	EFFECTIVE STRESS COHESION (psf)	EFFECTIVE STRESS FRICTION ANGLE (deg)	UNDRAINED SHEAR (psf)	INITIAL VOID RATIO	PRECONSOLIDATION STRESS MAX (psf)	PRECONSOLIDATION STRESS MIN (psf)	C_c	C_r	pH	RESISTIVITY (ohm-cm)
IBR-49	16.0	28.2	52	28	24	-	-	DS	-	-	-	-	70	18.7	-	-	-	-	-	-	-	-
IBR-50	34.0	17.7	30	20	10	89.8	A-4(8)	UU	-	-	5610	-	-	-	3	-	-	-	-	-	-	-
IBR-51	51.0	19.4	39	16	23	75.5	A-4(2)	DS	-	-	-	-	198	21	-	-	-	-	-	-	-	-
IBR-52	16.0	24.5	43	23	20	95.9	A-7-6(21)	UU	-	-	576	-	-	-	0	-	-	-	-	-	-	-
IBR-52	16.5	29.8	43	23	20	95.9	-	CONS	126.9	-	-	-	-	-	-	0.68	7500	2200	0.18	0.07	-	-
IBR-53	12.0	24.9	49	22	27	85.6	A-7-6(25)	UU	-	-	804	-	-	-	0	-	-	-	-	-	-	-

DELAWARE DEPARTMENT OF TRANSPORTATION
AASHTO CLASSIFICATION OF SOILS AND SOIL-AGGREGATE MIXTURES

General Classification		Granular Materials (35% or Less Passing 0.075 mm)							Silt-Clay Materials (More than 35% Passing 0.075 mm)					Organic Soils
Group Classification	Group	A-1		A-3	A-2				A-4	A-5	A-6	A-7		A-8
	Sub-Group	A-1-a	A-1-b		A-2-4	A-2-5	A-2-6	A-2-7				A-7-5	A-7-6	
	Graphic	A	B			5		7				5		
Sieve Analysis, % Passing														See Note 1
2.00 mm (No. 10)		50 Max	-	-	-	-	-	-	-	-	-	-	-	
0.425 mm (No. 40)		30 Max	50 Max	51 Min	-	-	-	-	-	-	-	-	-	
0.075 mm (No. 200)		15 Max	25 Max	10 Max	35 Max	35 Max	35 Max	35 Max	36 Min	36 Min	36 Min	36 Min	36 Min	
Characteristics of Fraction		-		-	-	-	-	-	-	-	-	-	-	See Note 1
Passing 0.425 mm (No. 40)		-		-	-	-	-	-	-	-	-	-	-	
Liquid Limit		-		-	40 Max	41 Min	40 Max	41 Min	40 Max	41 Min	41 Max	41 Min	41 Min	
Plasticity Index		6 Max		NP	10 Max	10 Max	11 Min	11 Min	10 Max	10 Max	11 Min	11 Min	11 Min	
Usual Types of Significant Constituent Materials		Stone Fragments, Gravel and Sand		Fine Sand	Silty or Clayey Gravel and Sand				Silty Soils		Clayey Soils			Organic Soils

Plasticity Index of A-7-5 Subgroup Is Equal to or Less Than LL Minus 30

Plasticity Index of A-7-6 Subgroup Is Greater Than LL Minus 30

Note 1-Classification Based on Visual Inspection and not on Sieve Analysis or Atterberg Limits

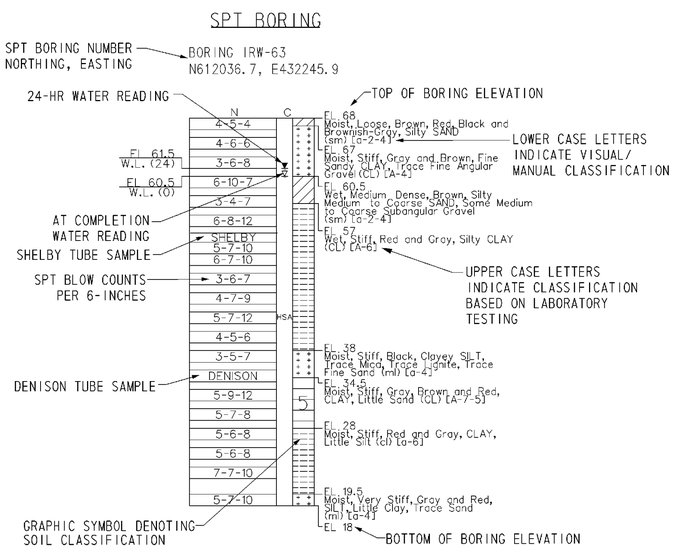

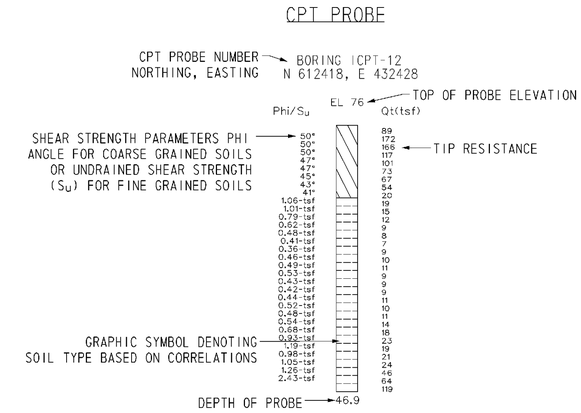

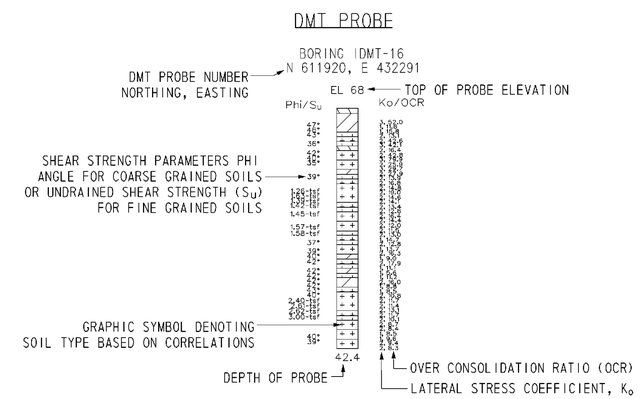

NOTES:

1. THE BORINGS AND DRIVE TEST WERE CONDUCTED IN MULTIPLE PHASES BY THE ROBERT B. BALTER COMPANY, THE WALTON CORPORATION, AND FINDLING, INC. BETWEEN AUGUST 2004 AND OCTOBER 2008.

2. THE SOIL SYMBOLS REFLECT ONLY THE MAJOR SOIL CONSTITUENT, FOR MORE COMPLETE SOIL CHARACTERISTIC REFER TO THE SOIL LOGS CONTAINED WITHIN THE FINAL FOUNDATION REPORTS DATED FEBRUARY 2009.

3. THE FIELD BORING LOGS RECORD SAMPLE SPOON RECOVERY. THE BORING LOGS AND LABORATORY TESTING RESUTS ARE AVAILABLE UPON REQUEST.

4. N = BLOWS ON A 2 INCH OD SAMPLING SPOON BY 140 LB DRIVE- WEIGHT FALLING 30 INCHES INDICATING SUCCESSIVE 6 INCH INCREMENTS OF PENETRATION. PENETRATIONS GREATER THAN 6-INCHES OR LESS THAN 6-INCHES ARE INDICATED BY WOH, WOR, OR THE DEPTH OF THE PENETRATION TO THE NEAREST INCH.

   WOH= STATIC WEIGHT OF SAMPLING SPOON DRIVE-WEIGHT ASSEMBLY, DRIVE-WEIGHT,ANVIL (WHEN AUTOMATIC HAMMER IS USED), DRILL ROD(S), AND SAMPLING SPOONS.

   WOR= STATIC WEIGHT OF DRILL ROD AND SAMPLING SPOON

5. FIELD BORINGS AND SOIL SAMPLING WERE PERFORMED IN ACCORDANCE TO AASHTO T-206, T-225 AND T-306.

6. USCS AND AASHTO DESIGNATIONS INDICATED IN UPPER CASE HAVE BEEN CONFIRMED USING LAB SOIL CLASSIFICATION TESTS. USCS AND AASHTO DESIGNATIONS INDICATED IN LOWER CASE ARE BASED ON VISUAL CLASSIFICATION TECHNIQUES ACCORDING TO ASTM D 2488 AND AASHTO M 145 BY RK&K GEOLOGIST OR ENGINEER.

7. CPT AND DMT PROBES WERE DRILLED BY IN-SITU SOIL TESTING, L.C AND CONETEC, INC.

   CPT = CONE PENETRATION TESTING
   DMT = FLAT- PLATE DILATOMETER

8. C= DEPTH OF HOLLOW STEM CONTINUOUS FLIGHT AUGER (HSA) WITH A 3-3/8 INCH ID, AND LIMIT OF MUD ROTARY (MD).

9. FOR BORING LOCATIONS, SEE CONSTRUCTION PLAN SHEETS.

10. FOR ADDITIONAL BORING & DRIVE TESTS SEE BORING & DRIVE TESTS SHEETS FOR OTHER STRUCTURES.

11. FOR ADDITIONAL LABORATORY TEST RESULTS OF UNDISTURBED TUBE SAMPLES AND INDEX TESTING, SEE SOIL BORING PLANS.

12. FOR GROUNDWATER MONITORING DATA, SEE SOIL BORING PLANS.

14. LL= LIQUID LIMIT

15. PL = PLASTIC LIMIT

16. PI = PLASTICITY INDEX

17. UC = UNCONFINED COMPRESSION

18. DS = DIRECT SHEAR

19. CONS = CONSOLIDATION

20. UU = UNCONSOLIDATED- UNDRAINED TRIAXIAL TEST

21. CIUC = CONSOLIDATED ISOTROPIC UNDRAINED COMPRESSION TRIAXIAL TEST

22. AASHTO = AMERICAN ASSOCIATION OF STATE HIGHWAY TRANSPORTATION OFFICIALS

8/19/2010 5:34:22 PM
M:\PROJECTS\2003\03059_DELTRNPK\SRIMALL\CADD\3009004\PLANS\B0023_S7_RAMPR1.DGN

DELAWARE DEPARTMENT OF TRANSPORTATION

ADDENDUMS / REVISIONS

NOT TO SCALE

SR1/I-95 INTERCHANGE - CHRISTIANA MALL ROAD BRIDGE

CONTRACT	BRIDGE NO.	1-223
T201009004	DESIGNED BY:	JLT
COUNTY		
NEW CASTLE	CHECKED BY:	EMK

RAMP R1 OVER SR7 BORING NOTES & LEGEND

S7-41

SHEET NO. 76

TOTAL SHTS. 164

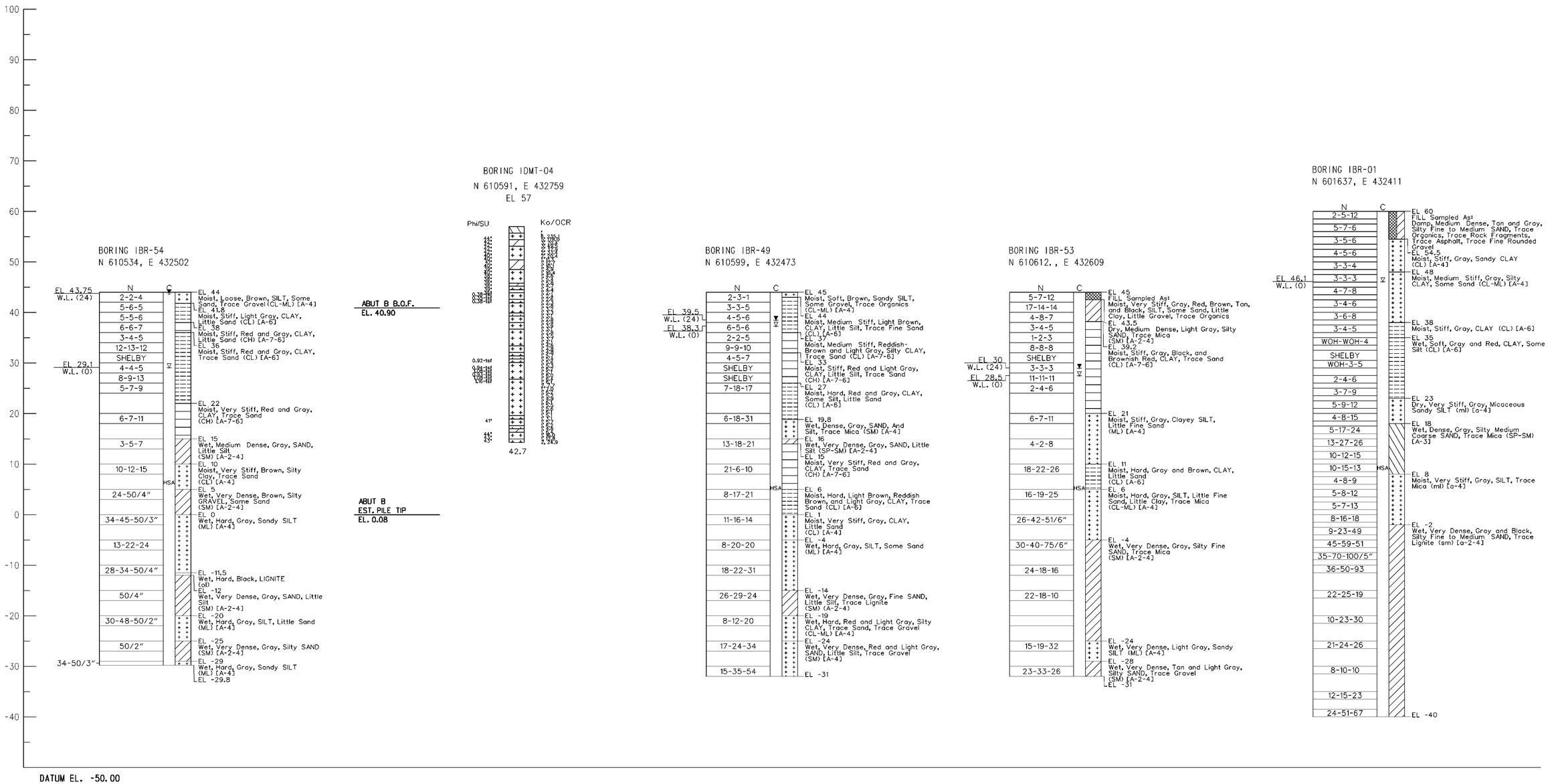

DATUM EL. -50.00

NOTES:

1. FOR BORING NOTES AND INFORMATION SEE DWG. NO. S7-41.
2. FOR BORING LOCATIONS SEE CONSTRUCTION PLAN SHEETS.

8/19/2010 5:34:38 PM
M:\PROJECTS\2003\03059_DELTRNPK\SR1MALL\CADD\3009004\PLANS\B0024_S7_RAMPR1.DGN

DELAWARE DEPARTMENT OF TRANSPORTATION

ADDENDUMS / REVISIONS

SCALE 0 10 20 30 FEET

SR1/I-95 INTERCHANGE - CHRISTIANA MALL ROAD BRIDGE

CONTRACT	BRIDGE NO.	1-223
T201009004	DESIGNED BY:	JLT
COUNTY		
NEW CASTLE	CHECKED BY:	EMK

RAMP R1 OVER SR7 BORING & DRIVE TESTS

S7-42

SHEET NO. 77

TOTAL SHTS. 164

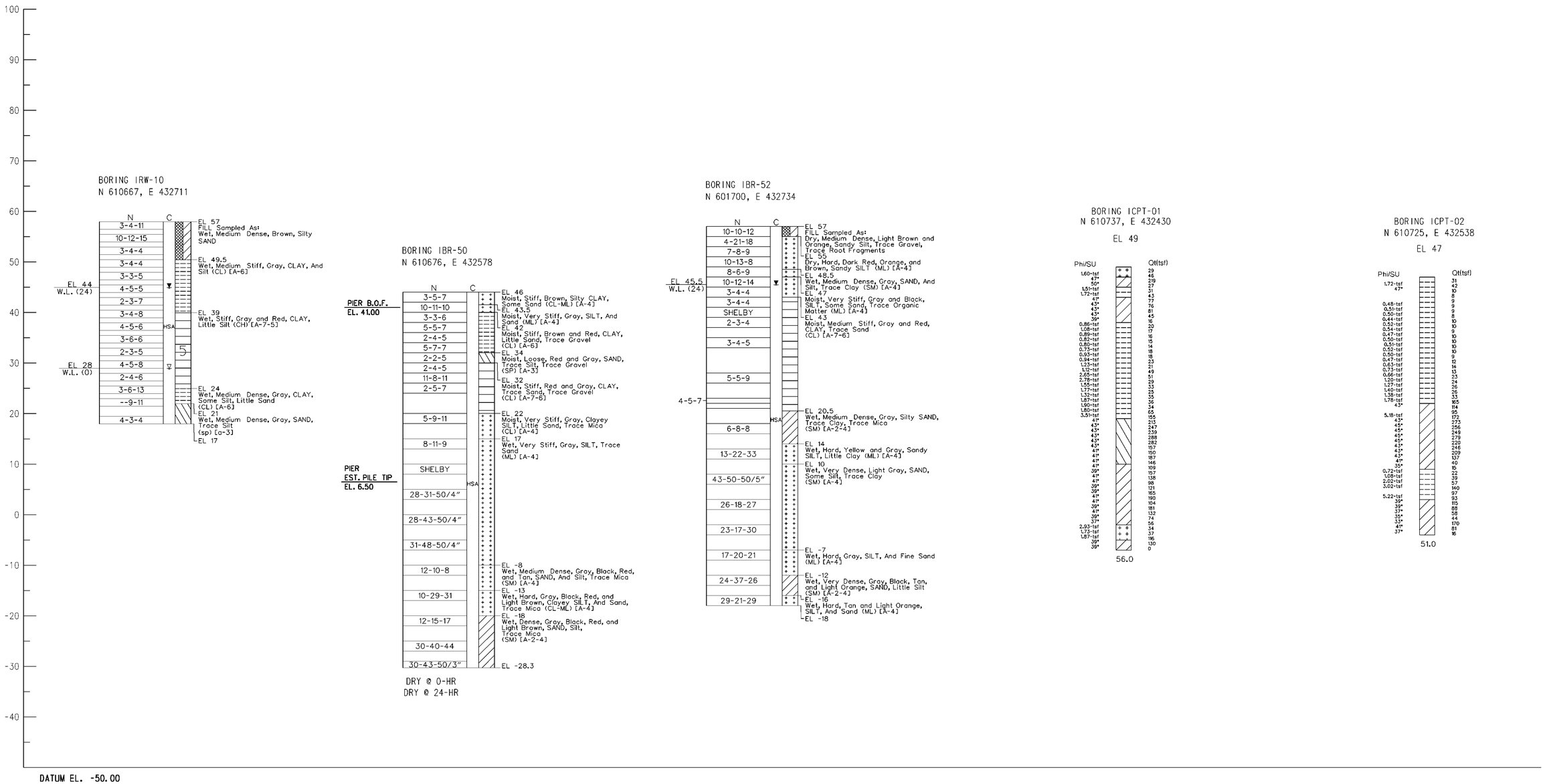

NOTES:

1. FOR BORING NOTES AND INFORMATION SEE DWG. NO. S7-41.
2. FOR BORING LOCATIONS SEE CONSTRUCTION PLAN SHEETS.

8/19/2010 5:35:04 PM
M:\PROJECTS\2003\03059_DELTRNPK\SRMALL\CADD\3009004\PLANS\B0025_S7_RAMPR1.DGN

DELAWARE DEPARTMENT OF TRANSPORTATION

ADDENDUMS / REVISIONS

SCALE 0 10 20 30 FEET

SR1 / I-95 INTERCHANGE - CHRISTIANA MALL ROAD BRIDGE

CONTRACT	BRIDGE NO.	1-223	
T201009004	DESIGNED BY:	JLT	
COUNTY			
NEW CASTLE	CHECKED BY:	EMK	

RAMP R1 OVER SR7 BORING & DRIVE TESTS

S7-43
SHEET NO.
78
TOTAL SHTS.
164

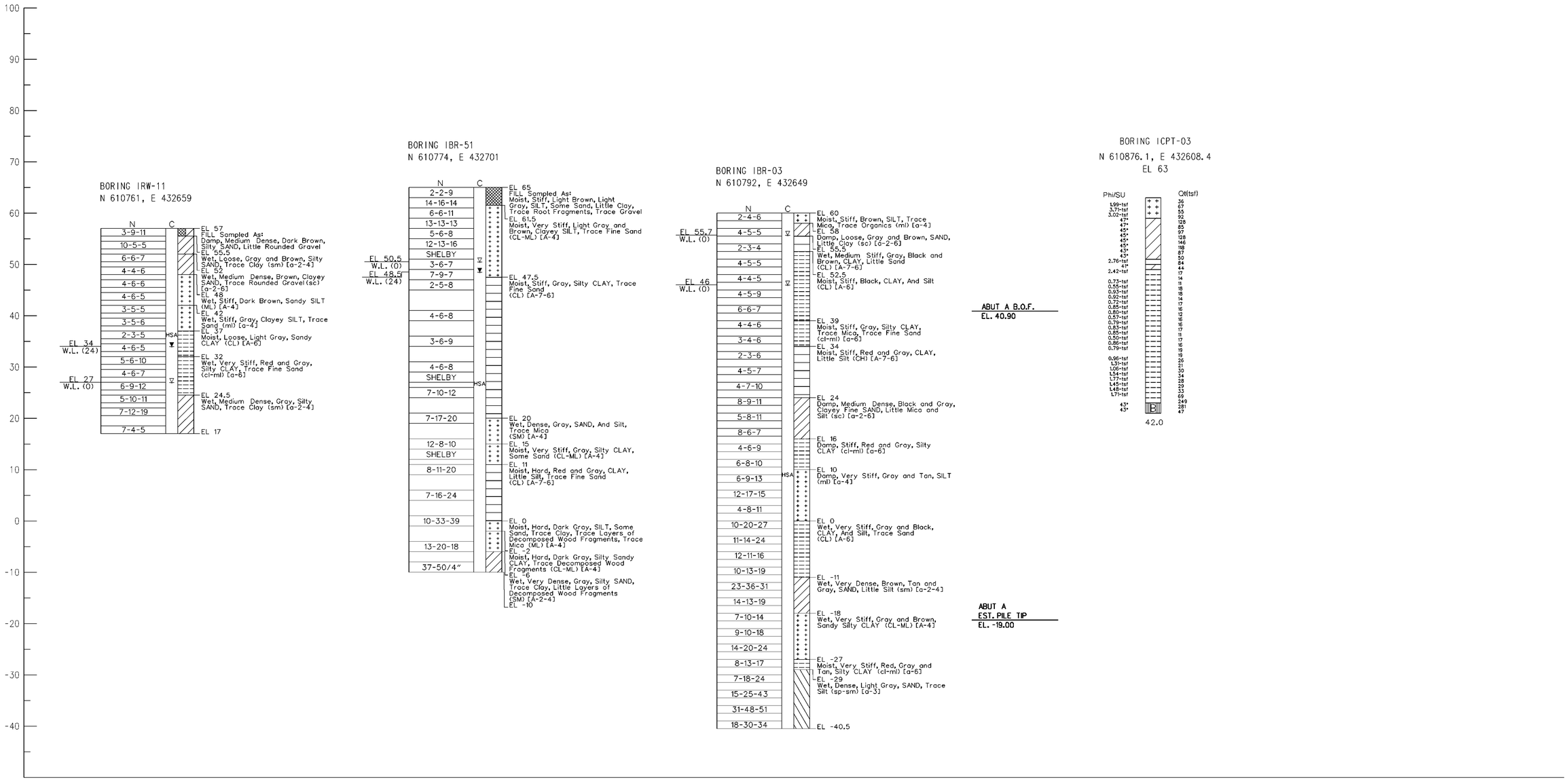

NOTES:

1. FOR BORING NOTES AND INFORMATION SEE DWG. NO. S7-41.
2. FOR BORING LOCATIONS SEE CONSTRUCTION PLAN SHEETS.

8/19/2010 5:35:25 PM
M:\PROJECTS\2003\03059_DELTRNPK\SRIMALL\CADD\3009004\PLANS\B0026_S7_RAMPR1.DGN

DELAWARE DEPARTMENT OF TRANSPORTATION	ADDENDUMS / REVISIONS	SCALE 0 10 20 30 FEET	SR1 / I-95 INTERCHANGE - CHRISTIANA MALL ROAD BRIDGE	CONTRACT T201009004	BRIDGE NO. 1-223	RAMP R1 OVER SR7 BORING & DRIVE TESTS
				COUNTY NEW CASTLE	DESIGNED BY: JLT	
					CHECKED BY: EMK	

S7-44
SHEET NO. 79
TOTAL SHTS. 164

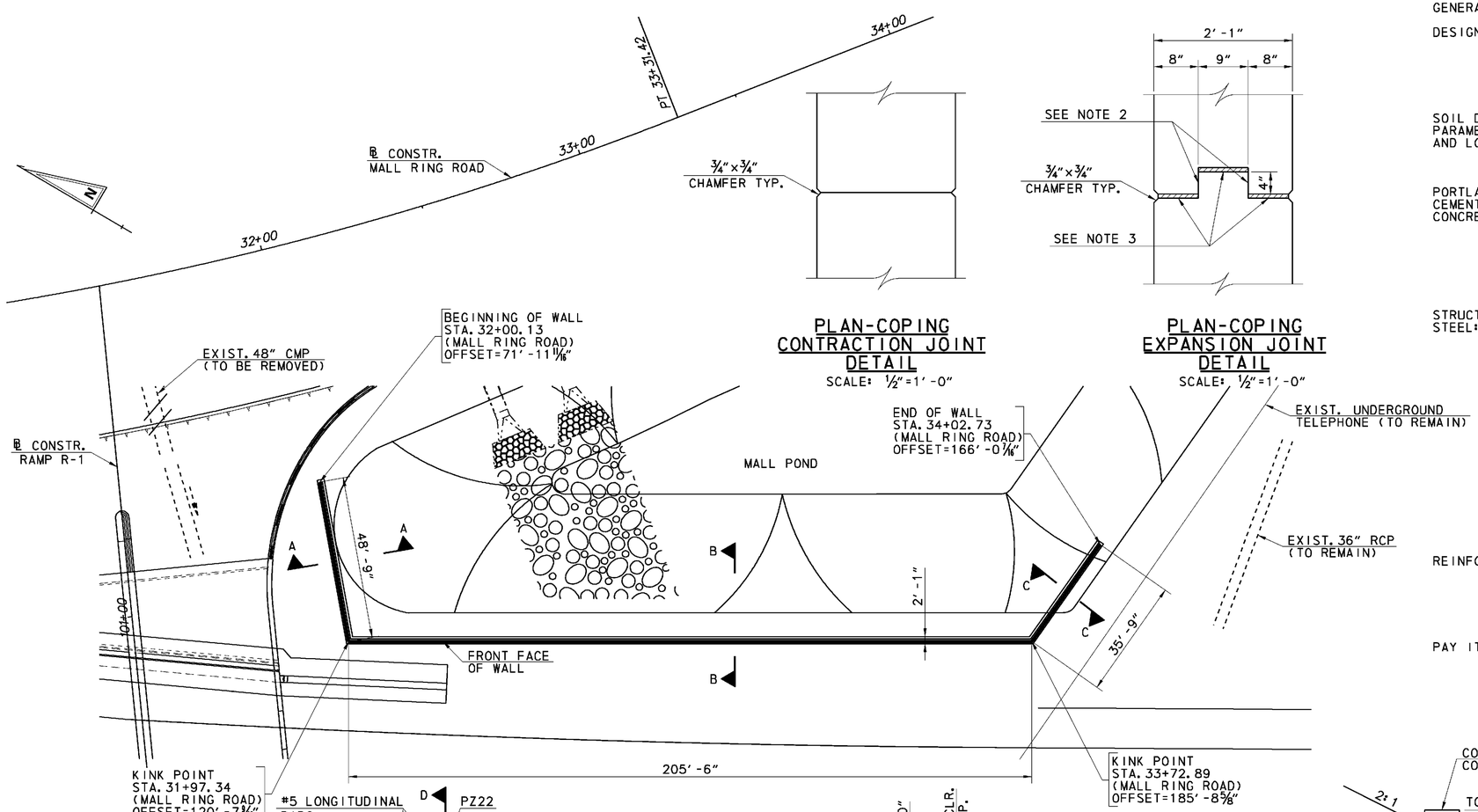

PLAN-COPING CONTRACTION JOINT DETAIL

SCALE: 1/2"=1' -0"

PLAN-COPING EXPANSION JOINT DETAIL

SCALE: 1/2"=1' -0"

PLAN

SCALE: 1"=20' -0"

COPING DETAIL-PLAN

SCALE: 1/2"=1' -0"

SECTION D-D

SCALE: 1/2"=1' -0"

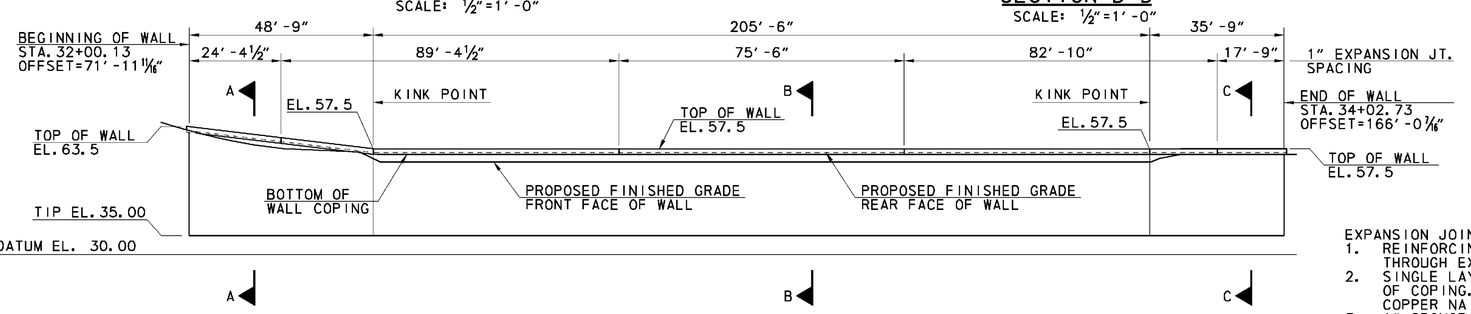

ELEVATION

DIMENSIONS MEASURED ALONG FRONT FACE OF WALL
SCALE: 1"=20' -0"

GENERAL NOTES

DESIGN: DESIGN FOR THE CANTILEVERED SHEET PILE WALL WAS PERFORMED USING THE SIMPLIFIED LATERAL EARTH PRESSURE DISTRIBUTION METHOD AS SPECIFIED IN SECTION 3.11.5.6 OF THE AASHTO LRFD BRIDGE DESIGN SPECIFICATION, CUSTOMARY US UNITS 4TH EDITION 2007.

SOIL DESIGN PARAMETERS AND LOADING: SAFETY FACTOR FOR OVERTURNING IS A MINIMUM OF 1.5.
$\Phi = 28°$
$\gamma = 130$ LB/FT^3 ABOVE WATER TABLE
Ka & Kp WERE CALCULATED USING COULOMB'S EARTH PRESSURE THEORY.

PORTLAND CEMENT CONCRETE: COPING CONCRETE SHALL BE NORMAL WEIGHT CONCRETE WITH A 28 DAY COMPRESSIVE STRENGTH OF 4,500 PSI, CLASS A.

MIX REQUIREMENTS SHALL CONFORM TO SECTION 812 OF THE DELAWARE DEPARTMENT OF TRANSPORTATION STANDARD SPECIFICATIONS.

ALL EXPOSED EDGES SHALL BE CHAMFERED 3/4".

STRUCTURAL STEEL: SHEET PILES SHALL BE ASTM A572 STEEL WITH A YIELD STRENGTH OF 50 KSI.

THE STEEL SHEET PILE SECTIONS SHOWN WERE DESIGNED USING THE FOLLOWING SECTION PROPERTIES:

SECTION MODULUS = 18.1 IN^3/FT
MODULUS OF INERTIA= 84.38 IN^4/FT

THE STEEL SHEET PILE SUPPLIER SHALL PROVIDE SHOP DRAWINGS AND STEEL SHEET PILE SECTIONS THAT MEET OR EXCEED THE SECTION PROPERTIES SHOWN ABOVE.

THE STEEL SHEET PILES SHALL BE PAINTED WITH URETHANE PAINT SYSTEM IN ACCORDANCE WITH SPECIAL PROVISION NO. 605537 URETHANE PAINT SYSTEM. THE FINAL COLOR SHALL BE FEDERAL NO. 10076 (BROWN) OF FED-STD-595B. COST OF PAINTING SHALL BE INCIDENTAL TO ITEM 622007, STEEL SHEET PILES, PZ 22.

REINFORCEMENT: ALL MILD STEEL REINFORCING BARS SHALL BE AASHTO M31 GRADE 60 KSI EPOXY COATED DEFORMED BARS FOR THE COPING.

REINFORCING STEEL CLEAR COVER SHALL BE 2" UNLESS OTHERWISE NOTED.

PAY ITEMS: PORTLAND CEMENT CONCRETE MASONRY, CLASS A (602001)
BAR REINFORCEMENT, EPOXY COATED (604000)
STEEL SHEET PILES, PZ 22 (622007)

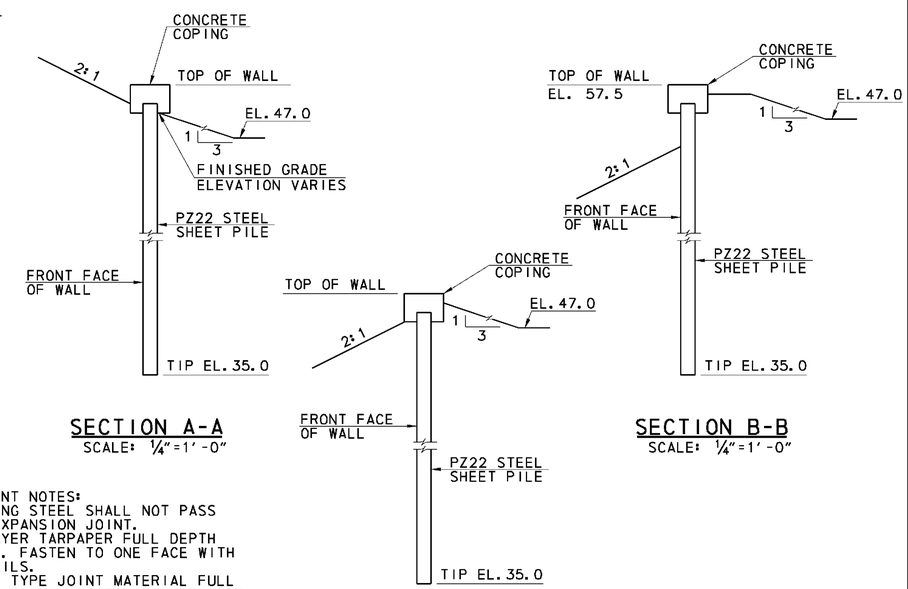

SECTION A-A

SCALE: 1/4"=1' -0"

SECTION B-B

SCALE: 1/4"=1' -0"

SECTION C-C

SCALE: 1/4"=1' -0"

EXPANSION JOINT NOTES:
1. REINFORCING STEEL SHALL NOT PASS THROUGH EXPANSION JOINT.
2. SINGLE LAYER TARPAPER FULL DEPTH OF COPING. FASTEN TO ONE FACE WITH COPPER NAILS.
3. 1" SPONGE TYPE JOINT MATERIAL FULL DEPTH OF COPING. FASTEN TO ONE SIDE WITH COPPER NAILS.
4. CONTRACTION JOINTS SHALL BE PLACED BETWEEN EXPANSION JOINTS, SPACED EVENLY, AT A MAX SPACING OF 30' 0".

8/16/2010 3:09:28 PM
M:\PROJECTS\2003\03059_DELTRNPK\SRMALL\CADD\3009004\PLANS\RD01_WALL-1_RAMPR1.DGN

DELAWARE DEPARTMENT OF TRANSPORTATION	ADDENDUMS / REVISIONS	SCALE AS NOTED	SR1/I-95 INTERCHANGE - CHRISTIANA MALL ROAD BRIDGE	CONTRACT T201009004	BRIDGE NO. 1-223	RETAINING WALL DETAILS	SHEET NO. 80
				COUNTY NEW CASTLE	DESIGNED BY: BBS		TOTAL SHTS.
					CHECKED BY: JSW		164

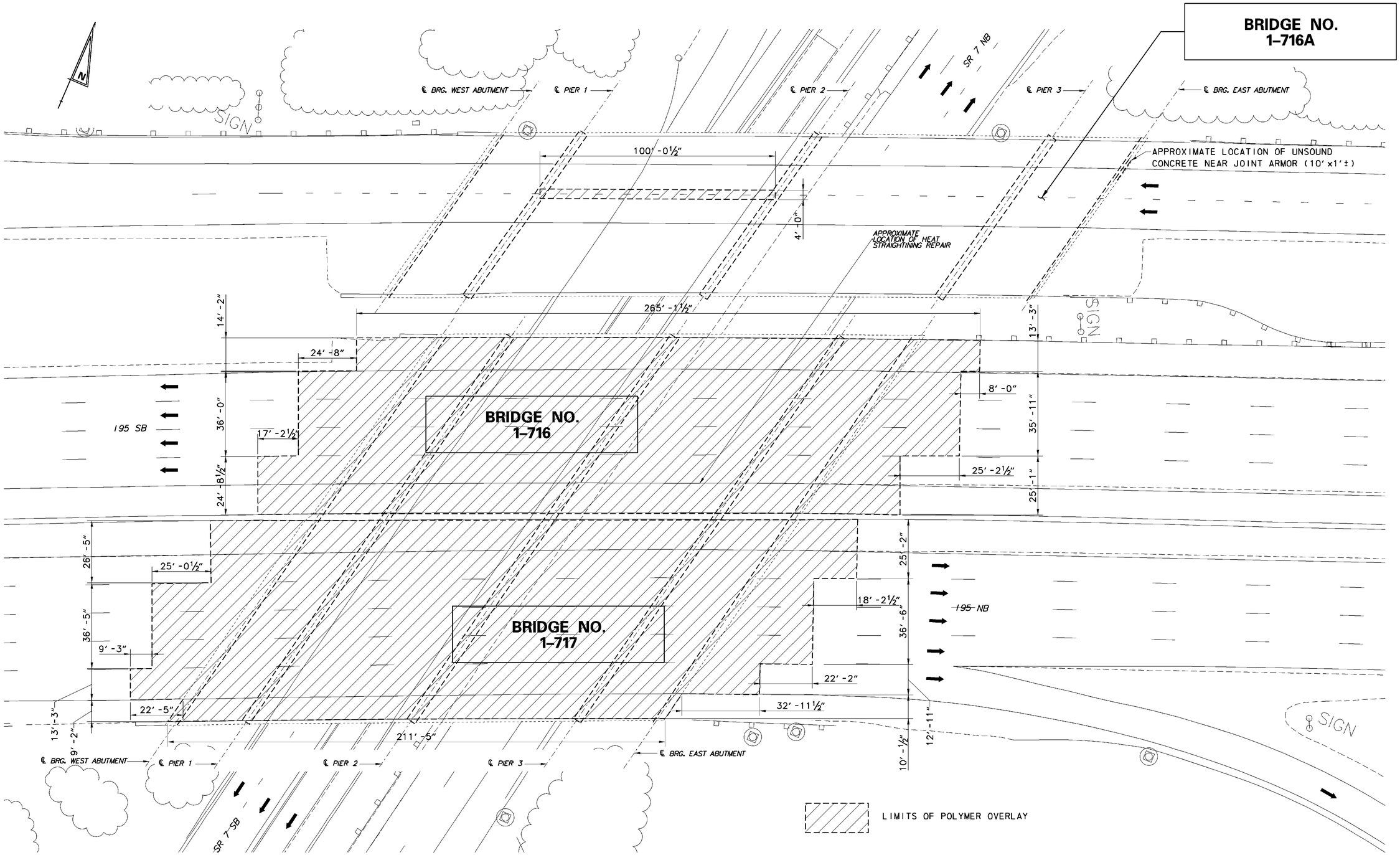

10/7/2010 4:55:45 PM
M:\PROJECTS\2003\03059_DELTRNPK\SRMALL\CADD\3009004\PLANS\RH01_RAMPR1.DGN

DELAWARE DEPARTMENT OF TRANSPORTATION

ADDENDUMS / REVISIONS	

0 10 20 30 50

SR1/I-95 INTERCHANGE - CHRISTIANA MALL ROAD BRIDGE

CONTRACT	T201009004
COUNTY	NEW CASTLE
BRIDGE NO.	
DESIGNED BY:	DWD
CHECKED BY:	JSW

BRIDGE REHABILITATION GENERAL PLAN

	RH-1
SHEET NO.	81
TOTAL SHTS.	164

BRIDGE REHABILITATION NOTES

1. THE DEPARTMENT RESERVES THE RIGHT TO INCREASE OR DECREASE THE QUANTITIES OF BRIDGE REHABILITATION SPECIFIC PAY ITEMS LISTED ON THIS SHEET. SUCH ADDITIONS OR DELETIONS SHALL NOT BE CAUSE FOR AN INCREASE OR DECREASE IN ANY CONTRACT UNIT BID PRICES. THE "CHANGE" THRESHOLD OF PLUS OR MINUS 25%, AS DESCRIBED IN SECTION 104.05 OF THE DELDOT STANDARD SPECIFICATIONS, SHALL NOT APPLY TO THE BRIDGE REHABILITATION ITEMS.

2. PAY ITEM USAGE MAY BE SHIFTED (OR RE-UTILIZED) FROM ONE BRIDGE TO ANOTHER WITHIN THIS CONTRACT. THIS RE-UTILIZATION OF PAY ITEMS SHALL NOT BE CAUSE FOR AN INCREASE OR DECREASE IN CONTRACT UNIT BID PRICES.

3. CONCRETE BLOCK FOR EMBANKMENTS UNDER BRIDGES (PAID UNDER 712526) SHALL MATCH EXISTING CONCRETE BLOCKS IN COLOR AND TEXTURE TO THE SATISFACTION OF DELDOT.

4. ALL COSTS FOR ACCESS BENEATH BRIDGES (SUCH AS SCAFFOLDING, BUCKET TRUCKS, LADDERS, ETC.) SHALL BE INCLUDED IN THE BID PRICE FOR EACH APPLICABLE MAINTENANCE AND REPAIR PAY ITEM. NO SEPARATE PAYMENT WILL BE MADE FOR ACCESS.

5. CONTRACTOR SHALL PROVIDE A MINIMUM 15'-0" OF VERTICAL CLEARANCE FOR ALL WORK OVER SR7. EXISTING MINIMUM VERTICAL CLEARANCES: SB SR 7 = ±17.15', NB SR 7 = ±14.42'. ALL EXISTING VERTICAL CLEARANCES SHALL BE FIELD VERIFIED BY THE CONTRACTOR PRIOR TO WORK OVER SR 7.

PCC MASONRY NOTES - DECK

1. THE CONTRACTOR SHALL SCHEDULE THE CONCRETE MILLING AND POLYMER CONCRETE OVERLAYS OF THE DECKS AND APPROACH SLABS SO THAT ALL MILLED SURFACES ARE COVERED WITH POLYMER CONCRETE AND PROPERLY CURED TO ALLOW USE BY VEHICULAR TRAFFIC BY THE END OF EACH WORKING SHIFT. AS WITH ALL WORK IN THIS CONTRACT, THE CONTRACTOR SHALL ADHERE TO THE TRAFFIC RESTRICTIONS PRESENTED ON SHEET 119. IT IS UNDERSTOOD THAT ADDITIONAL LONGITUDINAL AND TRANSVERSE JOINTS WILL BE REQUIRED TO ACHIEVE THIS RESULT. ALL JOINTS SHALL BE PREPARED AS RECOMMENDED BY THE MANUFACTURER PRIOR TO PLACING ANY ADJOINING POLYMER CONCRETE. JOINT PREPARATION TO BE INCIDENTAL TO ITEM 602733. LONGITUDINAL JOINTS SHALL BE LOCATED TO MATCH EXISTING LANE LINES OR BE PLACED AS CLOSE AS POSSIBLE TO THE CENTER OF THE TRAVEL LANE. IN NO CASE SHALL A LONGITUDINAL JOINT BE PLACED IN THE WHEEL PATH OF THE LANE.

2. IT IS ANTICIPATED THAT REMOVAL OF EXISTING LATEX OR CONCRETE ON THE EXISTING DECKS AND/OR APPROACH SLABS WILL REQUIRE A MINIMAL AMOUNT OF HAND CHIPPING OR REMOVAL BY SMALLER MILLING MACHINES IN THE VICINITY OF THE BRIDGE JOINTS. ALL SUCH MINOR REMOVAL SHALL BE CONSIDERED INCIDENTAL TO THE PRICE BID FOR ITEM 760001.

3. FOLLOWING THE MILLING OPERATION ON THE DECKS AND APPROACH SLABS, THE MILLED CONCRETE SURFACES WILL IMMEDIATELY BE SOUNDED TO DETERMINE ANY AREAS TO BE PATCHED. PATCHES SHALL BE PREPARED ACCORDING TO SPECIAL PROVISION 602734. ALL PATCHES SHALL BE FILLED WITH POLYMER CONCRETE IN ONE PASS AT THE SAME TIME THE DECK OR APPROACH SLAB OVERLAY IS PLACED. PAYMENT FOR THE POLYMER CONCRETE USED IN THE PATCH AREA FROM THE BOTTOM OF THE PATCH TO THE MILLED SURFACE WILL BE PAID FOR AS PART OF THE SY-IN PATCHING PRICE. DEPTH OF PATCH WILL BE MEASURED FROM THE MILLED SURFACE TO THE BOTTOM OF THE PREPARED PATCH, OR FROM THE ORIGINAL CONCRETE SURFACE IF THE AREA IS NOT MILLED.

4. FOR AREAS NOT REQUIRING MILLING CONCRETE DECK SPALLS SHALL BE REPAIRED IN ACCORDANCE WITH ITEM 602734. SAWCUT A RECTANGULAR SHAPE AROUND THE PERIPHERY OF EACH SPALL, SHAPED TO BE 1" WIDER THAN THE SPALL PERIPHERY. REMOVE EXISTING CONCRETE DECK TO A DEPTH NECESSARY TO REACH SOUND CONCRETE. APPLY AN EPOXY BONDING COAT TO ROUGHENED CONCRETE SURFACE. THOROUGHLY CLEAN THE SURFACE PRIOR TO APPLICATION OF BONDING COAT. WHERE EXISTING DECK OVERLAYS ARE PRESENT, SAW CUT TO A DEPTH NECESSARY TO PENETRATE THE ENTIRE OVERLAY DEPTH (TYPICALLY 2" TO 3" DEEP). ALL WORK DESCRIBED IN THIS PROJECT NOTE SHALL BE INCLUDED IN THE BID PRICE FOR ITEM 602734.

5. WHEN REPAIRING BOTTOM SIDE OF CONCRETE DECKS, PERFORM REPAIRS IN ACCORDANCE WITH THE FOLLOWING REQUIREMENTS, UNLESS SPECIFIED OTHERWISE IN BRIDGE SPECIFIC PROJECT NOTES:

   a. FOR SPALL AND DELAMINATION REPAIRS LESS THAN 3" DEPTH, USE PAY ITEM 602572. FOR REPAIRS GREATER THAN OR EQUAL TO 3" DEPTH, PAY ITEM 602586 SHALL BE USED AS DETERMINED BY DELDOT ENGINEER. CONSULT WITH ENGINEER PRIOR TO PERFORMING DEEP SPALL REPAIRS ON BOTTOM SIDE OF DECK. LANE CLOSURES ON BRIDGE DECK MAY BE REQUIRED.

   b. PERFORM SOUNDING FOR DELAMINATION OF CONCRETE AROUND VISIBLE CRACKS, SPALLS AND OTHER DETERIORATION. SOUNDING OF CONCRETE SHALL BE INCIDENTAL TO THE BID PRICE FOR PAY ITEM 602572. REMOVE AND REPLACE DELAMINATED AND DETERIORATED CONCRETE.

   c. IF REINFORCING STEEL IS EXPOSED, THEN ALL EXPOSED STEEL SHALL BE THOROUGHLY CLEANED OF RUST AND OTHER CONTAMINANTS. PAYMENT SHALL BE INCLUDED IN THE UNIT BID PRICE FOR ITEM 602586.

6. REMOVAL OF THE EXISTING HOT MIX PATCH ON THE DECK OF BRIDGE 716A SHALL BE ACCOMPANIED BY MILLING AND PAID FOR UNDER ITEM 760001. FOLLOWING THE MILLING OPERATION ON THE DECKS THE MILLED CONCRETE SURFACES WILL IMMEDIATELY BE SOUNDED TO DETERMINE ANY AREAS TO BE PATCHED. PATCHES SHALL BE PREPARED ACCORDING TO SPECIAL PROVISION 602734. ALL PATCHES SHALL BE FILLED WITH POLYMER CONCRETE IN ONE PASS AT THE SAME TIME THE DECK OVERLAY IS PLACED. PAYMENT FOR THE POLYMER CONCRETE USED IN THE PATCH AREA FROM THE BOTTOM OF THE PATCH TO THE MILLED SURFACE WILL BE PAID FOR AS PART OF THE SY-IN PATCHING PRICE. DEPTH OF PATCH WILL BE MEASURED FROM THE MILLED SURFACE TO THE BOTTOM OF THE PREPARED PATCH, OR FROM THE ORIGINAL CONCRETE SURFACE IF THE AREA IS NOT MILLED. THIS AREA WILL BE FILLED WITH POLYMER CONCRETE UNDER ITEM 602733. ALL WORK ON THE DECK OF BRIDGE 1-716A SHALL BE PERFORMED WITH DETOUR PLAN 5 IN PLACE (FULL BRIDGE CLOSURE) PER THE TRAFFIC RESTRICTIONS PRESENTED ON SHEET 119 FOR I-95.

PCC MASONRY NOTES- ABUTMENTS, PIERS, WINGWALLS, ETC.

1. SUBMITTALS FOR WET AND DRY APPLICATIONS ARE REQUIRED FOR ITEM 602611.

2. PRIOR TO APPLICATION OF CONCRETE SEALANTS UNDER PAY ITEMS 602518 AND 602646, SUBMIT FEDERAL COLOR SAMPLES TO DELDOT FOR APPROVAL.

3. POWER WASHING OF HORIZONTAL SURFACES (PIER CAPS AND ABUTMENTS): BRIDGE SPECIFIC PROJECT NOTES REQUIRE SEALING OF HORIZONTAL SURFACES ON PIER CAPS AND ABUTMENTS. PRIOR TO APPLICATION OF SEALANT, THE HORIZONTAL SURFACES MUST BE PREPARED IN ACCORDANCE WITH THE SPECIFIED SPECIAL PROVISION. WHEN USING PRESSURE WASH, CONTRACTOR SHALL PROTECT ROADSIDE DRAINAGE INLETS AND ABOVE GROUND DRAINAGE SYSTEMS AS NECESSARY TO COMPLY WITH DELDOT NPDES ENVIRONMENTAL PERMIT (NATIONAL POLLUTANT DISCHARGE ELIMINATION SYSTEM).

4. WHEN PERFORMING SPALL REPAIRS ON VERTICAL CONCRETE SURFACES UNDER PAY ITEM 602586, THE PRODUCT DATA SHEET FOR PROPOSED MATERIAL MUST STATE THAT THE MATERIAL IS SUITABLE FOR REPAIRS ON VERTICAL SURFACES.

5. WHEN REPAIRING CONCRETE VERTICAL SURFACES, SUCH AS ABUTMENTS, PIER CAPS AND COLUMNS, AND WHEN REPAIRING CONCRETE DECK HAUNCHES, PERFORM REPAIRS IN ACCORDANCE WITH THE FOLLOWING REQUIREMENTS:

   a. FOR SPALL AND DELAMINATION REPAIRS LESS THAN OR EQUAL TO 2.0" DEEP, USE ITEM 602572 (WITH NO EXPOSED REINFORCING STEEL).

   b. FOR SPALL AND DELAMINATION REPAIRS GREATER THAN 2.0" IN DEPTH, OR WHEN REINFORCING STEEL IS EXPOSED BEFORE OR DURING REPAIR ACTIVITIES, PAYMENT SHALL BE UNDER ITEM 602586.

   c. SPALLS WITH SURFACE AREA LESS THAN 0.25 SF, AND DEPTH LESS THAN 3", SHALL BE PAID UNDER ITEM 602572.

   d. PERFORM SOUNDING FOR DELAMINATION OF CONCRETE AROUND VISIBLE CRACKS, SPALLS AND OTHER DETERIORATION. SOUNDING OF CONCRETE SHALL BE INCIDENTAL TO PAY ITEM 602572. REMOVE AND REPLACE DELAMINATED AND DETERIORATED CONCRETE.

   e. WHEN REINFORCING STEEL IS EXPOSED BEFORE OR DURING REPAIR ACTIVITIES, REMOVE CONCRETE BEHIND BAR AND PREPARE SURFACE IN ACCORDANCE WITH INCLUDED DRAWING DETAIL FOR DEEP SPALL REPAIR. PAYMENT SHALL BE UNDER ITEM 602586.

   f. CRACK WIDTHS LARGER THAN ONE HALF INCH SHALL BE REPAIRED BY GROUTING. PAYMENT WILL BE UNDER ITEM 602572.

6. ALL CONCRETE SPALL REPAIR PERFORMED UNDER PAY ITEM 602572 OR 602586 SHALL BE PERFORMED IN ACCORDANCE WITH THE REQUIREMENTS AS STATED IN THE RESPECTIVE SPECIAL PROVISION, AND IN ACCORDANCE WITH THE FOLLOWING ADDITIONAL REQUIREMENTS:

   a. PERFORM ABRASIVE BLASTING OF REINFORCING STEEL AS NECESSARY TO REMOVE CORROSION AND OTHER CONTAMINANTS PRIOR TO PLACEMENT OF PATCHING MORTAR OR CONCRETE.

   b. PREPARED CONCRETE SURFACE SHALL BE ROUGHENED BY ABRASIVE BLASTING PRIOR TO PLACEMENT OF PATCH MORTAR OR CONCRETE. THIS ROUGHENING IMPROVES THE MECHANICAL BOND WHEN PATCH MATERIAL IS APPLIED.

7. WHEN CONCRETE SEALANT APPLICATION IS SPECIFIED FOR ABUTMENTS AND BACKWALLS, THE BACKWALL VERTICAL SURFACE SHALL BE SEALED A DISTANCE OF ONE FOOT FROM TOP OF ABUTMENT (UNLESS STATED OTHERWISE IN BRIDGE SPECIFIC NOTES). IN ADDITION, THE VERTICAL FACE OF ABUTMENT SHALL BE PAINTED A DISTANCE OF ONE FOOT DOWN FROM TOP OF ABUTMENT (UNLESS STATED OTHERWISE IN BRIDGE SPECIFIC PROJECT NOTES). PROVIDE MASKING AS NECESSARY TO PAINT A STRAIGHT EDGE LINE ON VERTICAL FACES OF ABUTMENTS AND BACKWALLS. IF ABUTMENT VERTICAL FACE IS 3 FT HIGH OR LESS, THEN APPLY SEALANT TO THE ENTIRE ABUTMENT FACE. CONSULT WITH DELDOT INSPECTOR FOR CLARIFICATION PRIOR TO COMMENCEMENT OF WORK AT EACH BRIDGE. SEAL THE ENTIRE HORIZONTAL TOP SURFACE OF ABUTMENTS AND PEDESTALS.

8. OPEN CRACKS IN BARRIERS SHALL BE PAID FOR UNDER AND REPAIRED AS PER ITEM 602626.

9. BRIDGE PEDESTAL SPALL REPAIRS SHALL BE PAID FOR UNDER ITEM 602631.

BRIDGE BEARING NOTE

1. MATERIAL SPECIFICATION FOR PAY ITEM 605636 SHALL COMPLY WITH THE FOLLOWING: GREASE APPLIED TO STEEL BRIDGE BEARINGS SHALL BE SHELL RHODINA GREASE SDX 2, OR EXXON MOBIL CENTAUR MOLY GREASE, OR APPROVED EQUAL. FOR BRIDGES WITH STEEL STRUCTURAL COMPONENTS PAINTED GREEN, THE GREASE SHALL BE COATED WITH A MATCHING COAT OF THE FINISH PAINT (GREEN, FEDERAL SPECIFICATION #24172, STANDARD 595B). THE GREASE SHALL BE APPLIED TO THE ENTIRE STEEL BEARING COMPONENT FOR EACH BRIDGE BEARING.

BRIDGE DECK AND APPROACH SLAB JOINT NOTES

1. CLEAN STRIP SEAL JOINTS ON DECKS OF ALL BRIDGES. CLEANING OF DECK JOINTS SHALL BE INCLUDED IN THE BID PRICE FOR PAY ITEM 602546, AND SHALL INCLUDE REMOVAL OF ALL DEBRIS AND SEDIMENT FROM JOINTS. CLEANING SHALL NOT BE PERFORMED WITH ANY METHOD THAT MAY DAMAGE THE EXISTING GLAND MATERIAL AND CONNECTIONS IN STRIP SEAL JOINTS.

2. FOR AREAS NOT REQUIRING MILLING, APPROACH SLAB JOINT SEALANT SHALL BE PAID FOR UNDER AND APPLIED IN ACCORDANCE WITH ITEM 503501.

STRUCTURAL STEEL PAINTING NOTES

1. THE PAINT SYSTEM USED FOR THE STRUCTURAL STEEL SHALL BE APPLIED IN A THREE (3) COAT SYSTEM APPLICATION AND PAID FOR UNDER ITEM 605522.

2. ALL STRUCTURES IN THIS CONTRACT ARE ASSUMED TO CONTAIN LEAD BASED PAINT ON ALL OF THE STRUCTURAL STEEL.

3. PRIOR TO APPLYING NEW PAINT SYSTEM, ALL EXISTING COATINGS ON THE STRUCTURAL STEEL SHALL BE COMPLETELY REMOVED, IN ACCORDANCE WITH ITEM 605533. THERE SHALL BE NO OVER COATING OF EXISTING PAINT OR SEALANT SYSTEMS.

4. IF ANY CLEANING TO BE PERFORMED REQUIRES PRE-CLEANING BY PRESSURE WASHING, THEN THIS PRESSURE WASHING SHALL BE INCIDENTAL TO ITEM 605533.

5. FOR BRIDGES WITH EXISTING STEEL STRUCTURAL COMPONENTS PAINTED GREEN, THE COLOR OF PAINT SHALL BE GREEN, FEDERAL SPECIFICATION #24172, STANDARD 595B. THE COLOR SHALL BE SUBMITTED TO DELDOT FOR APPROVAL PRIOR TO COMMENCEMENT OF WORK.

6. HAZARDOUS WASTE GENERATED DURING STEEL CLEANING OPERATIONS SHALL BE DISPOSED OF IN ACCORDANCE WITH REQUIREMENTS STATED IN 605533, AND IN ACCORDANCE WITH ALL STATE, FEDERAL AND LOCAL REGULATIONS. CONTRACTOR SHALL SUBMIT COPIES OF ALL HAZARDOUS WASTE MANIFESTS AND TICKETS TO DELDOT.

7. CLEANING AND PAINTING OF DOWNSPOUTS AND BRIDGE BEARINGS SHALL BE INCLUDED IN THE BID PRICE FOR ITEMS 605522 AND 605533.

8. THE CONTRACTOR SHALL PROVIDE A COATING WARRANTY IN ACCORDANCE WITH PAY ITEM 605690. THE WARRANTY AND GUARANTEE WILL NOT TAKE EFFECT UNTIL THE DATE OF FINAL ACCEPTANCE.

BRIDGE JACKING NOTE

1. JACKING, INCLUDING ALL MATERIALS, LABOR AND EQUIPMENT NECESSARY FOR JACKING THE EXISTING BRIDGE AND REMOVING THE JACKING ASSEMBLIES, SHALL BE MEASURED AND PAID FOR AT THE CONTRACT LUMP SUM PRICE BID FOR ITEM 605607. THIS ITEM INCLUDES JACKING BEARING PLATES, HYDRAULIC JACKS, ANY TEMPORARY BLOCKING OR SHIMS, LATERAL BRACING OR RESTRAINERS, ALL LABOR AND ANY ADDITIONAL MATERIALS REQUIRED TO JACK EXISTING BRIDGE. PERMANENT GALVANIZED STEEL SHIMS ARE INCIDENTAL TO THIS ITEM.

HEAT STRAIGHTENING NOTE

1. GIRDER 1 ON BRIDGE 716 SHALL BE HEAT STRAIGHTENED IN ACCORDANCE WITH ITEM 605551.

ITEM CODE	UNIT	ITEM
406507	LF	CRACK SEALING
503501	LF	CRACK AND JOINT SEALING LESS THAN 3/4" WIDE
602518	SF	WATER BASED ACRYLIC CONCRETE SEALER
602546	SF	WATERPROOFING PCC MASONRY
602572	LB	REPAIRING EXISTING PCC STRUCTURES
602578	LF	REPAIRING JOINTS AND CRACKS WITH MORTAR
602586	CF	REHABILITATION OF CONCRETE STRUCTURE
602611	LF	REPAIR OF CONCRETE STRUCTURES BY EPOXY INJECTION
602612	LS	ACCESS AND CONTAINMENT FOR BRIDGE REPAIRS
602626	LF	ROUT AND SEAL CRACKS
602631	EA	PEDESTAL SPALL REPAIR
602646	SF	SILICONE ACRYLIC CONCRETE SEALER
602733	SY-IN	THIN POLYMER OVERLAY
602734	SY-IN	BRIDGE DECK PATCHING, POLYESTER POLYMER CONCRETE
605522	LS	URETHANE PAINT SYSTEM, EXISTING STEEL
605533	LS	CLEANING EXISTING STEEL STRUCTURES, HAZARDOUS BASE (FOR PAINTING ENTIRE STRUCTURE)
605551	LS	REPAIRING DAMAGED STEEL GIRDERS
605589	LS	EXPANSION JOINT
605607	LS	JACKING BRIDGE
605636	EA	CLEAN AND LUBRICATE BRIDGE BEARINGS
605690	N/A	COATING WARRANTY
605692	LF	SILICONE JOINT SEAL
712526	SY	CONCRETE BLOCK SLOPE PAVING REPAIR, 6"
760001	SY-IN	PAVEMENT - MILLING CONCRETE

BRIDGE 1-716 NOTES

1. INSTALL ACCESS AND CONTAINMENT SYSTEM TO PREVENT DEBRIS FROM FALLING ONTO S.R. 7 DURING REPAIR ACTIVITIES AS REQUIRED. ACCESS AND CONTAINMENT SYSTEM MUST BE APPROVED BY DELDOT PRIOR TO COMMENCEMENT OF WORK. BIDDERS SHALL ASSUME THAT ALL FACES OF ALL PIERS FOR THIS BRIDGE MUST BE ACCESSED AND CONTAINED FOR SPALL, CRACK AND DELAMINATION REPAIRS.

2. CLEAN DEBRIS FROM DECK AND EXPANSION JOINTS. MILL, PATCH AND OVERLAY DECK AND APPROACH SLABS AS DESCRIBED IN PCC MASONRY NOTES - DECK AND SHOWN ON GENERAL PLAN.

3. REPAIR SPALLS ON BARRIERS. PERFORM SOUNDING FOR CONCRETE DELAMINATION AROUND VISIBLE SPALLS, CRACKS AND DETERIORATION, WITH DELDOT INSPECTOR PRESENT. REMOVE AND REPLACE DELAMINATED OR DETERIORATED CONCRETE.

4. REPAIR OPENED CRACKS IN BARRIERS.

5. APPLY WATER BASED ACRYLIC CONCRETE SEALANT TO ALL FACES OF THE BARRIERS.

6. REPAIR VISIBLE SPALLS ON UNDERSIDE (BOTTOM) OF BRIDGE DECK. PERFORM SOUNDING FOR CONCRETE DELAMINATION ON UNDERSIDE OF DECK AROUND VISIBLE SPALLS, CRACKS AND DETERIORATION, WITH DELDOT INSPECTOR PRESENT. REPAIR DELAMINATED AND DETERIORATED CONCRETE.

7. HEAT STRAIGHTEN GIRDER 1 AND REPAIR DIAPHRAGM.

8. CLEAN AND PAINT ALL STEEL STRUCTURAL COMPONENTS OF BRIDGE. REMOVE ALL EXISTING PAINT ON STEEL COMPONENTS OF ENTIRE BRIDGE STRUCTURE IN ACCORDANCE WITH SPECIAL PROVISIONS AND PROJECT NOTES INCLUDED IN THIS CONTRACT. SPECIFICATIONS FOR GREASE SHALL COMPLY WITH PROJECT NOTES FOR THIS CONTRACT. GREASE SHALL BE APPLIED TO ALL BEARINGS ON BRIDGE.

9. REPAIR SPALLS AND DELAMINATION IN CONCRETE ABUTMENTS, BACKWALLS AND WINGWALLS. PERFORM SOUNDING FOR DELAMINATION AROUND VISIBLE CRACKS, SPALLS AND DETERIORATION. REMOVE AND REPLACE DELAMINATED AND DETERIORATED CONCRETE.

10. REPAIR CRACKS IN CONCRETE ABUTMENTS, BACKWALLS AND WINGWALLS.

11. APPLY SILICONE ACRYLIC CONCRETE SEALANT TO ALL EXPOSED VERTICAL AND HORIZONTAL SURFACES OF CONCRETE ABUTMENTS, BACKWALLS AND WINGWALLS. ENSURE PROPER SURFACE PREPARATION PRIOR TO APPLICATION OF SEALANT, IN ACCORDANCE WITH SPECIAL PROVISION REQUIREMENTS.

12. REPAIR SPALLS ON CONCRETE PIERS AND PIER CAPS. PERFORM SOUNDING FOR DELAMINATION AROUND VISIBLE CRACKS, SPALLS AND DETERIORATION. SOUNDING IS INCIDENTAL TO THE APPROPRIATE SPALL REPAIR ITEM. REMOVE AND REPLACE DELAMINATED OR DETERIORATED CONCRETE.

13. REPAIR CRACKS ON PIERS AND PIER CAPS.

14. APPLY SILICONE ACRYLIC CONCRETE SEALANT TO ALL EXPOSED VERTICAL AND HORIZONTAL SURFACES OF CONCRETE PIER CAP. ENSURE PROPER SURFACE PREPARATION PRIOR TO APPLICATION OF SEALANT, IN ACCORDANCE WITH SPECIAL PROVISION REQUIREMENTS.

15. REPLACE DETERIORATED CONCRETE BLOCK SLOPE PAVING ON BRIDGE EMBANKMENT.

BRIDGE 1-717 NOTES

1. INSTALL ACCESS AND CONTAINMENT SYSTEM TO PREVENT DEBRIS FROM FALLING ONTO S.R. 7 DURING REPAIR ACTIVITIES AS REQUIRED. ACCESS AND CONTAINMENT SYSTEM MUST BE APPROVED BY DELDOT PRIOR TO COMMENCEMENT OF WORK. BIDDERS SHALL ASSUME THAT ALL FACES OF ALL PIERS FOR THIS BRIDGE MUST BE ACCESSED AND CONTAINED FOR SPALL, CRACK AND DELAMINATION REPAIRS.

2. CLEAN DEBRIS FROM DECK AND EXPANSION JOINTS. MILL, PATCH AND OVERLAY DECK AND APPROACH SLABS AS DESCRIBED IN PCC MASONRY NOTES - DECK AND SHOWN ON GENERAL PLAN.

3. REPAIR SPALLS ON BARRIERS. PERFORM SOUNDING FOR CONCRETE DELAMINATION AROUND VISIBLE SPALLS, CRACKS AND DETERIORATION, WITH DELDOT INSPECTOR PRESENT. REMOVE AND REPLACE DELAMINATED OR DETERIORATED CONCRETE.

4. REPAIR OPENED CRACKS IN BARRIERS.

5. APPLY WATER BASED ACRYLIC CONCRETE SEALANT TO ALL FACES OF THE BARRIERS.

6. REPAIR VISIBLE SPALLS ON UNDERSIDE (BOTTOM) OF BRIDGE DECK. PERFORM SOUNDING FOR CONCRETE DELAMINATION ON UNDERSIDE OF DECK AROUND VISIBLE SPALLS, CRACKS AND DETERIORATION, WITH DELDOT INSPECTOR PRESENT. REPAIR DELAMINATED AND DETERIORATED CONCRETE.

7. CLEAN AND PAINT ALL STEEL STRUCTURAL COMPONENTS OF BRIDGE. REMOVE ALL EXISTING PAINT ON STEEL COMPONENTS OF ENTIRE BRIDGE STRUCTURE IN ACCORDANCE WITH SPECIAL PROVISIONS AND PROJECT NOTES INCLUDED IN THIS CONTRACT. SPECIFICATIONS FOR GREASE SHALL COMPLY WITH PROJECT NOTES FOR THIS CONTRACT. GREASE SHALL BE APPLIED TO ALL BEARINGS ON BRIDGE.

8. REPAIR SPALLS AND DELAMINATION IN CONCRETE ABUTMENTS, BACKWALLS AND WINGWALLS. PERFORM SOUNDING FOR DELAMINATION AROUND VISIBLE CRACKS, SPALLS AND DETERIORATION. REMOVE AND REPLACE DELAMINATED AND DETERIORATED CONCRETE.

9. REPAIR CRACKS IN CONCRETE ABUTMENTS, BACKWALLS AND WINGWALLS.

10. APPLY SILICONE ACRYLIC CONCRETE SEALANT TO ALL EXPOSED VERTICAL AND HORIZONTAL SURFACES OF CONCRETE ABUTMENTS, BACKWALLS AND WINGWALLS. ENSURE PROPER SURFACE PREPARATION PRIOR TO APPLICATION OF SEALANT, IN ACCORDANCE WITH SPECIAL PROVISION REQUIREMENTS.

11. REPAIR SPALLS ON CONCRETE PIERS AND PIER CAPS. PERFORM SOUNDING FOR DELAMINATION AROUND VISIBLE CRACKS, SPALLS AND DETERIORATION. SOUNDING IS INCIDENTAL TO THE APPROPRIATE SPALL REPAIR ITEM. REMOVE AND REPLACE DELAMINATED OR DETERIORATED CONCRETE.

12. REPAIR CRACKS ON PIERS AND PIER CAPS.

13. APPLY SILICONE ACRYLIC CONCRETE SEALANT TO ALL EXPOSED VERTICAL AND HORIZONTAL SURFACES OF CONCRETE PIER CAP. ENSURE PROPER SURFACE PREPARATION PRIOR TO APPLICATION OF SEALANT, IN ACCORDANCE WITH SPECIAL PROVISION REQUIREMENTS.

14. REPLACE DETERIORATED CONCRETE BLOCK SLOPE PAVING ON BRIDGE EMBANKMENT.

BRIDGE 1-716A NOTES

1. INSTALL ACCESS AND CONTAINMENT SYSTEM TO PREVENT DEBRIS FROM FALLING ONTO S.R. 7 DURING REPAIR ACTIVITIES AS REQUIRED. ACCESS AND CONTAINMENT SYSTEM MUST BE APPROVED BY DELDOT PRIOR TO COMMENCEMENT OF WORK. BIDDERS SHALL ASSUME THAT ALL FACES OF ALL PIERS FOR THIS BRIDGE MUST BE ACCESSED AND CONTAINED FOR SPALL, CRACK AND DELAMINATION REPAIRS.

2. MILL, PATCH AND OVERLAY DECK AND APPROACH SLABS AS DESCRIBED IN PCC MASONRY NOTES - DECK AND SHOWN ON GENERAL PLAN.

3. REPAIR SPALLS ON BARRIERS. PERFORM SOUNDING FOR CONCRETE DELAMINATION AROUND VISIBLE SPALLS, CRACKS AND DETERIORATION, WITH DELDOT INSPECTOR PRESENT. REMOVE AND REPLACE DELAMINATED OR DETERIORATED CONCRETE.

4. REPAIR OPENED CRACKS IN BARRIERS.

5. APPLY WATER BASED ACRYLIC CONCRETE SEALANT TO ALL FACES OF THE BARRIERS.

6. APPLY SILANE BASED SEALANT TO APPROACH SLABS.

7. APPLY SEALANT TO JOINTS SURROUNDING APPROACH SLABS. JOINTS ARE LONGITUDINAL AND TRANSVERSE.

8. CLEAN DEBRIS FROM DECK AND EXPANSION JOINTS.

9. REPAIR VISIBLE SPALLS ON UNDERSIDE (BOTTOM) OF BRIDGE DECK. PERFORM SOUNDING FOR CONCRETE DELAMINATION ON UNDERSIDE OF DECK AROUND VISIBLE SPALLS, CRACKS AND DETERIORATION, WITH DELDOT INSPECTOR PRESENT. REPAIR DELAMINATED AND DETERIORATED CONCRETE.

10. CLEAN AND PAINT ALL STEEL STRUCTURAL COMPONENTS OF BRIDGE. REMOVE ALL EXISTING PAINT ON STEEL COMPONENTS OF ENTIRE BRIDGE STRUCTURE IN ACCORDANCE WITH SPECIAL PROVISIONS AND PROJECT NOTES INCLUDED IN THIS CONTRACT. SPECIFICATIONS FOR GREASE SHALL COMPLY WITH PROJECT NOTES FOR THIS CONTRACT. GREASE SHALL BE APPLIED TO ALL BEARINGS ON BRIDGE.

11. REPAIR SPALLS AND DELAMINATION IN CONCRETE ABUTMENTS, BACKWALLS AND WINGWALLS. PERFORM SOUNDING FOR DELAMINATION AROUND VISIBLE CRACKS, SPALLS AND DETERIORATION. REMOVE AND REPLACE DELAMINATED AND DETERIORATED CONCRETE.

12. REPAIR CRACKS IN CONCRETE ABUTMENTS, BACKWALLS AND WINGWALLS.

13. APPLY SILICONE ACRYLIC CONCRETE SEALANT TO ALL EXPOSED VERTICAL AND HORIZONTAL SURFACES OF CONCRETE ABUTMENTS, BACKWALLS AND WINGWALLS. ENSURE PROPER SURFACE PREPARATION PRIOR TO APPLICATION OF SEALANT, IN ACCORDANCE WITH SPECIAL PROVISION REQUIREMENTS.

14. REPAIR SPALLS ON CONCRETE PIERS AND PIER CAPS. PERFORM SOUNDING FOR DELAMINATION AROUND VISIBLE CRACKS, SPALLS AND DETERIORATION. SOUNDING IS INCIDENTAL TO THE APPROPRIATE SPALL REPAIR ITEM. REMOVE AND REPLACE DELAMINATED OR DETERIORATED CONCRETE.

15. REPAIR CRACKS ON PIERS AND PIER CAPS.

16. APPLY SILICONE ACRYLIC CONCRETE SEALANT TO ALL EXPOSED VERTICAL AND HORIZONTAL SURFACES OF CONCRETE PIER CAP. ENSURE PROPER SURFACE PREPARATION PRIOR TO APPLICATION OF SEALANT, IN ACCORDANCE WITH SPECIAL PROVISION REQUIREMENTS.

17. REPLACE DETERIORATED CONCRETE BLOCK SLOPE PAVING ON BRIDGE EMBANKMENT.

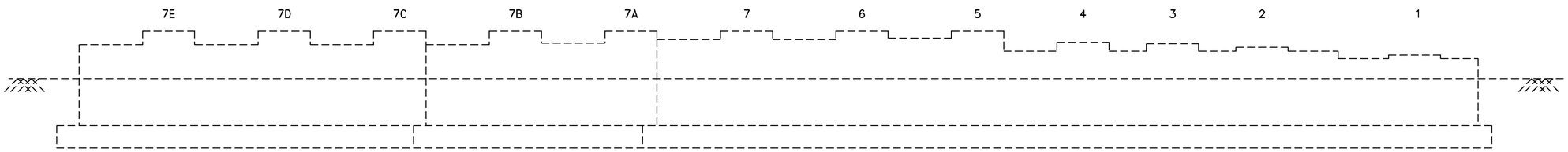

BRIDGE 716 - WEST ABUTMENT
CONCRETE REPAIR

NOT TO SCALE

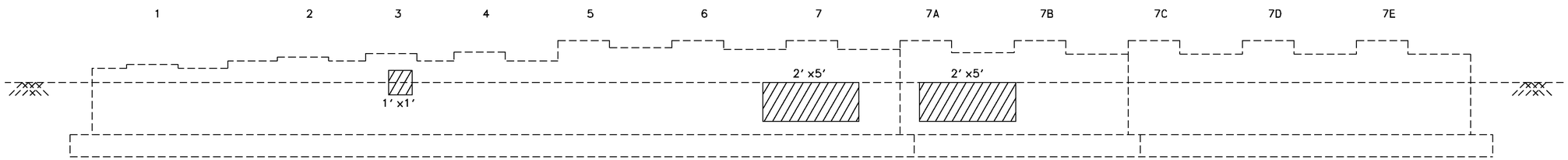

BRIDGE 716 - EAST ABUTMENT
CONCRETE REPAIR

NOT TO SCALE

LEGEND:

- DEEP SPALL REPAIR
- DELAMINATED CONCRETE AND/OR SHALLOW SPALL REPAIR
- CRACK REPAIR

NOTES:

1. PIER CONCRETE REPAIRS SHOWN GRAPHICALLY. REPAIR AREAS ARE BASED ON FIELD INSPECTION OBSERVATIONS TAKEN IN FEBRUARY/MARCH 2009. THE CONCRETE REPAIR QUANTITIES FOR ITEMS 602572, 602586, 602611 AND 602626 (AS APPLICABLE) HAVE BEEN INCREASED TO ACCOUNT FOR ADDITIONAL QUANTITIES DUE TO REMOVAL OF UNSOUND, LOOSE AND/OR DELAMINATED CONCRETE AND/OR LATENT DEFECTS THAT MAY HAVE OCCURED SINCE THE INSPECTIONS.
2. BACKWALL LIMITS NOT SHOWN

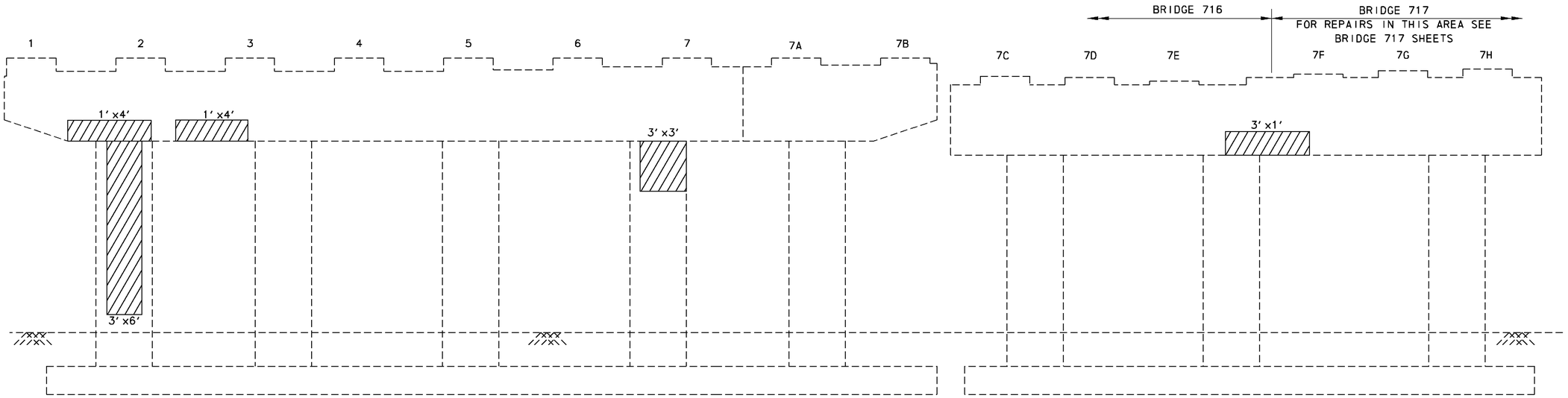

BRIDGE 716 - PIER 1
CONCRETE REPAIR (WEST ELEVATION)

NOT TO SCALE

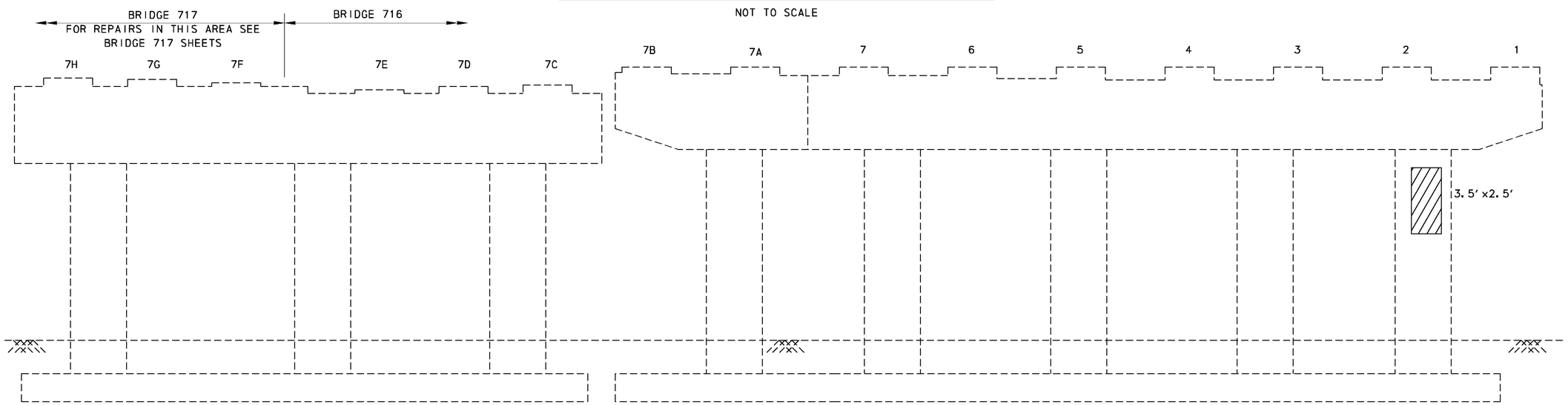

BRIDGE 716 - PIER 1
CONCRETE REPAIR (EAST ELEVATION)

NOT TO SCALE

NOTES:

1. PIER CONCRETE REPAIRS SHOWN GRAPHICALLY. REPAIR AREAS ARE BASED ON FIELD INSPECTION OBSERVATIONS TAKEN IN FEBRUARY/MARCH 2009. THE CONCRETE REPAIR QUANTITIES FOR ITEMS 602572, 602586, 602611 AND 602626 (AS APPLICABLE) HAVE BEEN INCREASED TO ACCOUNT FOR ADDITIONAL QUANTITIES DUE TO REMOVAL OF UNSOUND, LOOSE AND/OR DELAMINATED CONCRETE AND/OR LATENT DEFECTS THAT MAY HAVE OCCURED SINCE THE INSPECTIONS.

LEGEND:

- DEEP SPALL REPAIR
- DELAMINATED CONCRETE AND/OR SHALLOW SPALL REPAIR
- CRACK REPAIR

DELAWARE DEPARTMENT OF TRANSPORTATION	ADDENDUMS / REVISIONS		SR1/I-95 INTERCHANGE - CHRISTIANA MALL ROAD BRIDGE	CONTRACT T201009004	BRIDGE NO. 1-716	BRIDGE 716 REHABILITATION CONCRETE REPAIRS PIER 1	RH-5	
				COUNTY NEW CASTLE	DESIGNED BY: DWD		SHEET NO. 85	
					CHECKED BY: JSW		TOTAL SHTS. 164	

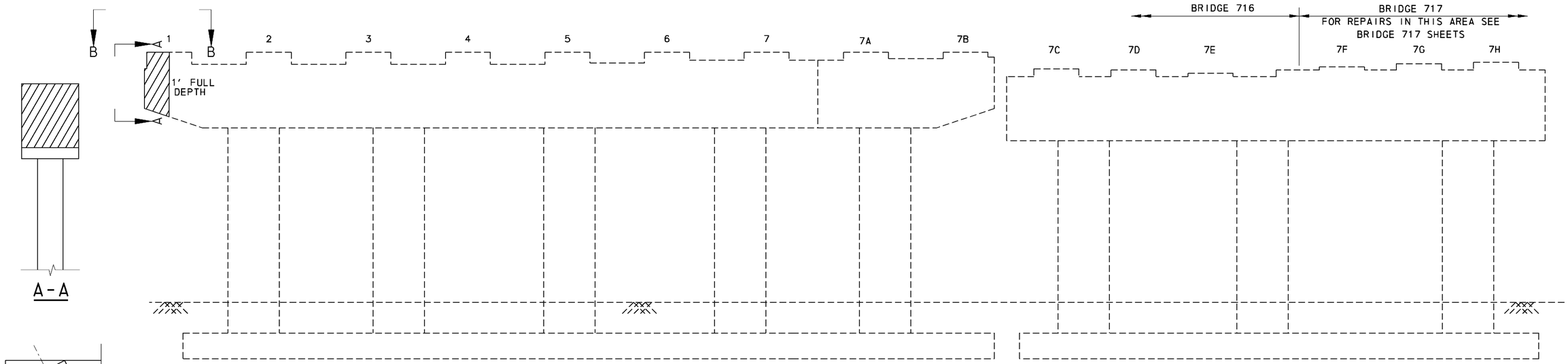

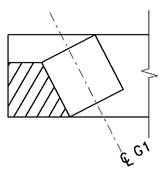

BRIDGE 716 - PIER 2
CONCRETE REPAIR (WEST ELEVATION)

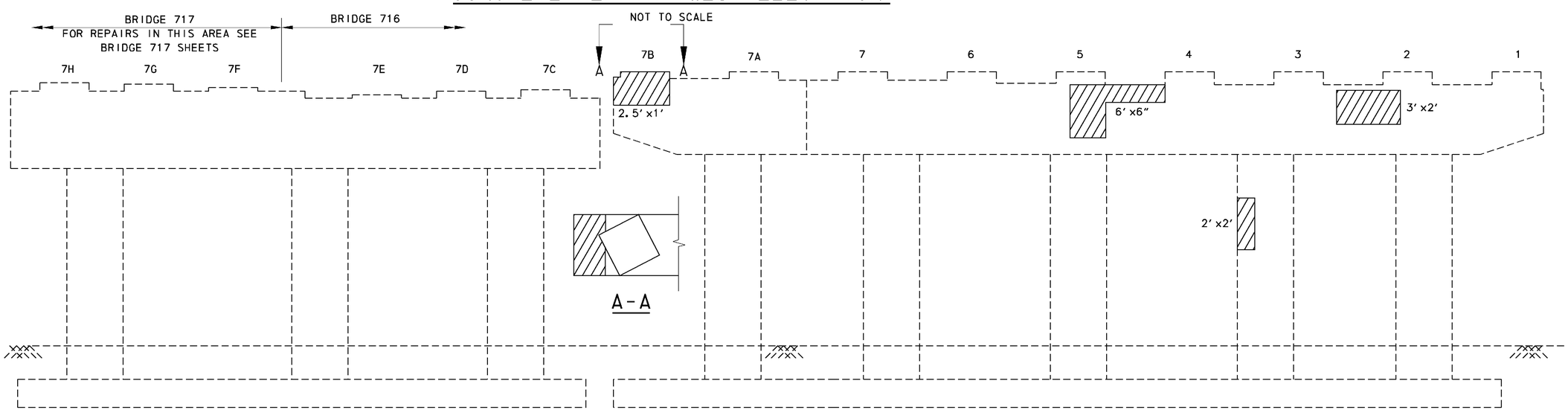

BRIDGE 716 - PIER 2
CONCRETE REPAIR (EAST ELEVATION)

NOT TO SCALE

NOTES:

1. PIER CONCRETE REPAIRS SHOWN GRAPHICALLY. REPAIR AREAS ARE BASED ON FIELD INSPECTION OBSERVATIONS TAKEN IN FEBRUARY/MARCH 2009. THE CONCRETE REPAIR QUANTITIES FOR ITEMS 602572, 602586, 602611 AND 602626 (AS APPLICABLE) HAVE BEEN INCREASED TO ACCOUNT FOR ADDITIONAL QUANTITIES DUE TO REMOVAL OF UNSOUND, LOOSE AND/OR DELAMINATED CONCRETE AND/OR LATENT DEFECTS THAT MAY HAVE OCCURED SINCE THE INSPECTIONS.

LEGEND:

- DEEP SPALL REPAIR
- DELAMINATED CONCRETE AND/OR SHALLOW SPALL REPAIR
- CRACK REPAIR

RH-6

DELAWARE DEPARTMENT OF TRANSPORTATION	ADDENDUMS / REVISIONS	SR1/I-95 INTERCHANGE - CHRISTIANA MALL ROAD BRIDGE	CONTRACT T201009004	BRIDGE NO. 1-716	BRIDGE 716 REHABILITATION CONCRETE REPAIRS PIER 2	SHEET NO. 86
			COUNTY NEW CASTLE	DESIGNED BY: DWD		TOTAL SHTS. 164
				CHECKED BY: JSW		

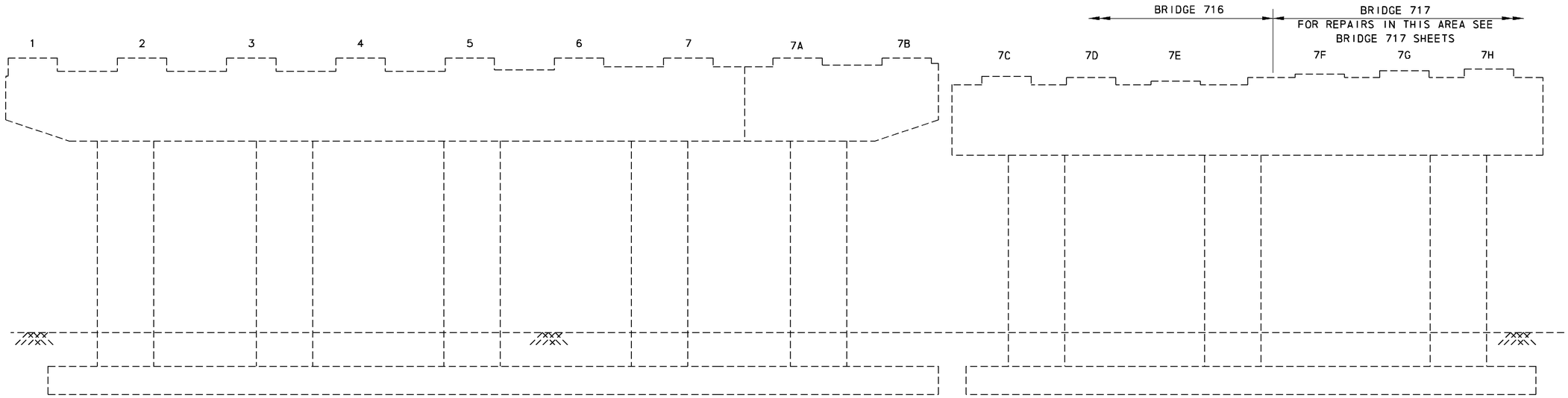

BRIDGE 716 - PIER 3
CONCRETE REPAIR (WEST ELEVATION)

NOT TO SCALE

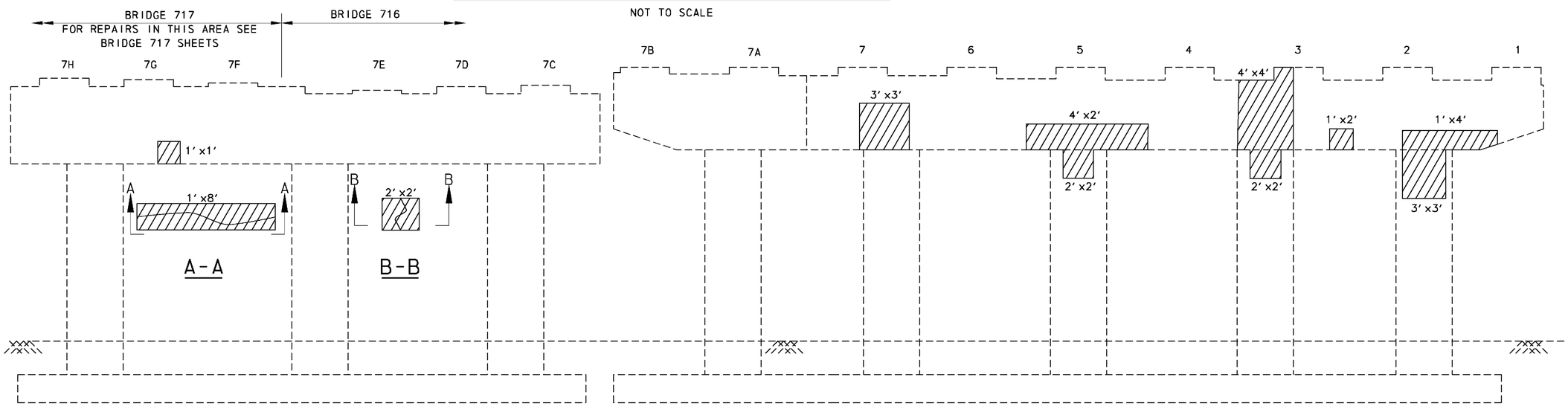

BRIDGE 716 - PIER 3
CONCRETE REPAIR (EAST ELEVATION)

NOT TO SCALE

NOTES:

1. PIER CONCRETE REPAIRS SHOWN GRAPHICALLY. REPAIR AREAS ARE BASED ON FIELD INSPECTION OBSERVATIONS TAKEN IN FEBRUARY/MARCH 2009. THE CONCRETE REPAIR QUANTITIES FOR ITEMS 602572, 602586, 602611 AND 602626 (AS APPLICABLE) HAVE BEEN INCREASED TO ACCOUNT FOR ADDITIONAL QUANTITIES DUE TO REMOVAL OF UNSOUND, LOOSE AND/OR DELAMINATED CONCRETE AND/OR LATENT DEFECTS THAT MAY HAVE OCCURED SINCE THE INSPECTIONS.

LEGEND:

- DEEP SPALL REPAIR
- DELAMINATED CONCRETE AND/OR SHALLOW SPALL REPAIR
- CRACK REPAIR

DELAWARE DEPARTMENT OF TRANSPORTATION	ADDENDUMS / REVISIONS	SR1/I-95 INTERCHANGE - CHRISTIANA MALL ROAD BRIDGE	CONTRACT T201009004	BRIDGE NO. 1-716	BRIDGE 716 REHABILITATION CONCRETE REPAIRS PIER 3	RH-7	
			COUNTY NEW CASTLE	DESIGNED BY: DWD		SHEET NO. 87	
				CHECKED BY: JSW		TOTAL SHTS. 164	

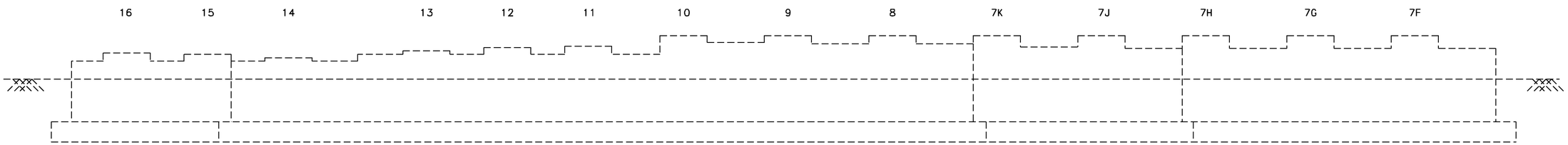

BRIDGE 717 - WEST ABUTMENT
CONCRETE REPAIR

NOT TO SCALE

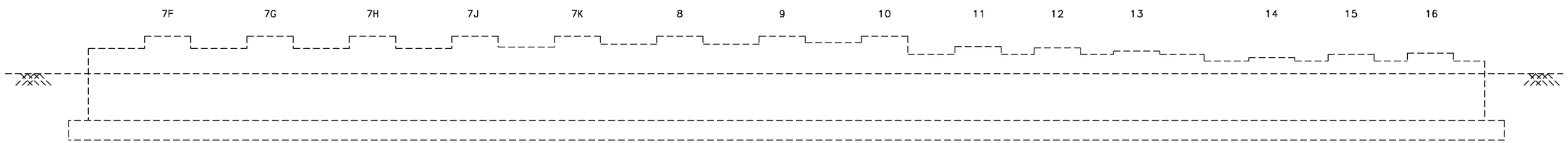

BRIDGE 717 - EAST ABUTMENT
CONCRETE REPAIR

NOT TO SCALE

NOTES:

1. PIER CONCRETE REPAIRS SHOWN GRAPHICALLY. REPAIR AREAS ARE BASED ON FIELD INSPECTION OBSERVATIONS TAKEN IN FEBRUARY/MARCH 2009. THE CONCRETE REPAIR QUANTITIES FOR ITEMS 602572, 602586, 602611 AND 602626 (AS APPLICABLE) HAVE BEEN INCREASED TO ACCOUNT FOR ADDITIONAL QUANTITIES DUE TO REMOVAL OF UNSOUND, LOOSE AND/OR DELAMINATED CONCRETE AND/OR LATENT DEFECTS THAT MAY HAVE OCCURED SINCE THE INSPECTIONS.
2. BACKWALL LIMITS NOT SHOWN

LEGEND:

- DEEP SPALL REPAIR
- DELAMINATED CONCRETE AND/OR SHALLOW SPALL REPAIR
- CRACK REPAIR

RH-8

DELAWARE DEPARTMENT OF TRANSPORTATION	ADDENDUMS / REVISIONS	SR1/I-95 INTERCHANGE - CHRISTIANA MALL ROAD BRIDGE	CONTRACT T201009004	BRIDGE NO. 1-717	BRIDGE 717 REHABILITATION CONCRETE REPAIRS ABUTMENTS	SHEET NO. 88
			COUNTY NEW CASTLE	DESIGNED BY: DWD		TOTAL SHTS. 164
				CHECKED BY: JSW		

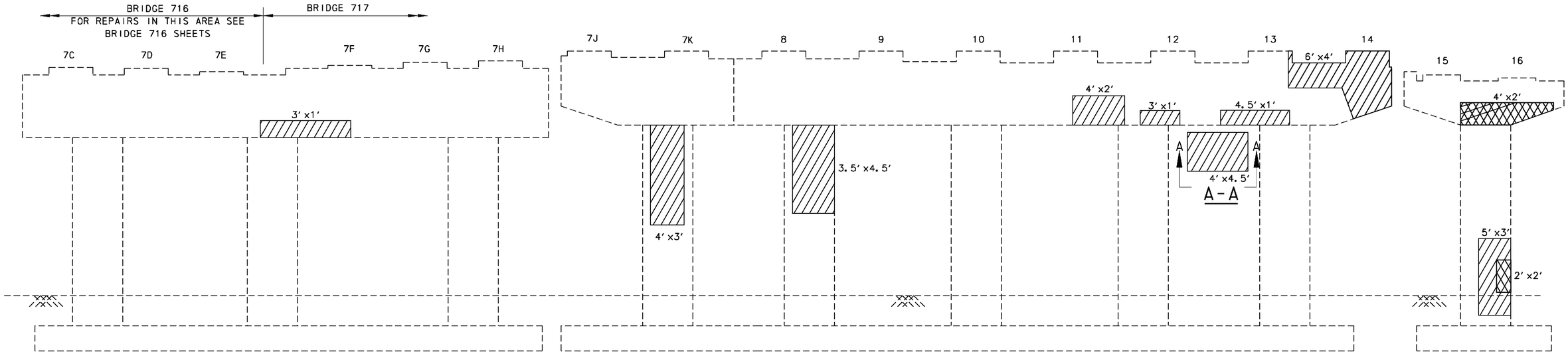

BRIDGE 717 - PIER 1
CONCRETE REPAIR (WEST ELEVATION)

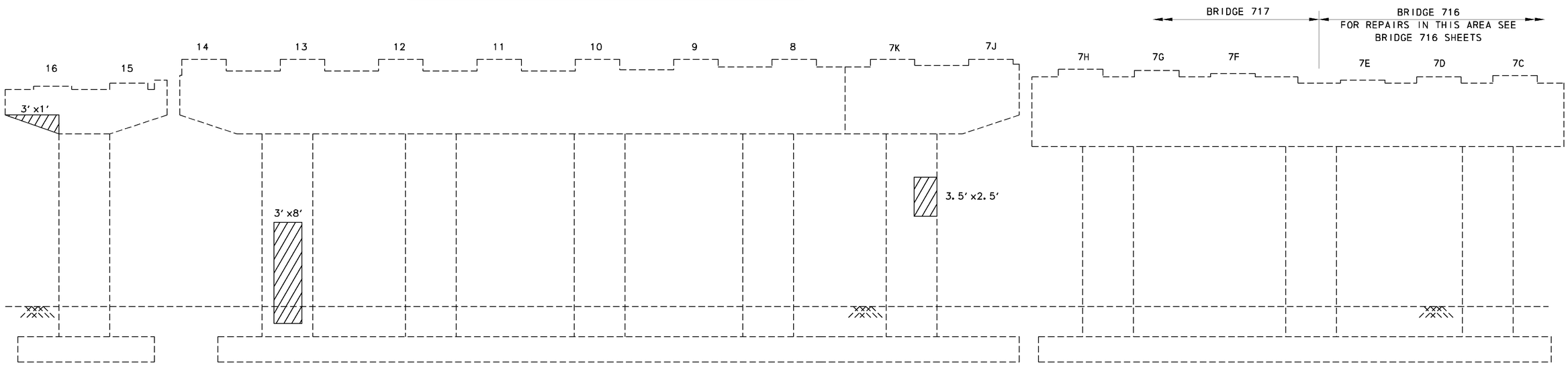

BRIDGE 717 - PIER 1
CONCRETE REPAIR (EAST ELEVATION)

NOTES:

1. PIER CONCRETE REPAIRS SHOWN GRAPHICALLY. REPAIR AREAS ARE BASED ON FIELD INSPECTION OBSERVATIONS TAKEN IN FEBRUARY/MARCH 2009. THE CONCRETE REPAIR QUANTITIES FOR ITEMS 602572, 602586, 602611 AND 602626 (AS APPLICABLE) HAVE BEEN INCREASED TO ACCOUNT FOR ADDITIONAL QUANTITIES DUE TO REMOVAL OF UNSOUND, LOOSE AND/OR DELAMINATED CONCRETE AND/OR LATENT DEFECTS THAT MAY HAVE OCCURED SINCE THE INSPECTIONS.

LEGEND:

- DEEP SPALL REPAIR
- DELAMINATED CONCRETE AND/OR SHALLOW SPALL REPAIR
- CRACK REPAIR

RH-9

DELAWARE DEPARTMENT OF TRANSPORTATION	ADDENDUMS / REVISIONS	SR1/I-95 INTERCHANGE - CHRISTIANA MALL ROAD BRIDGE	CONTRACT T201009004	BRIDGE NO. 1-717	BRIDGE 717 REHABILITATION CONCRETE REPAIRS PIER 1	SHEET NO. 89
			COUNTY NEW CASTLE	DESIGNED BY: DWD		TOTAL SHTS. 164
				CHECKED BY: JSW		

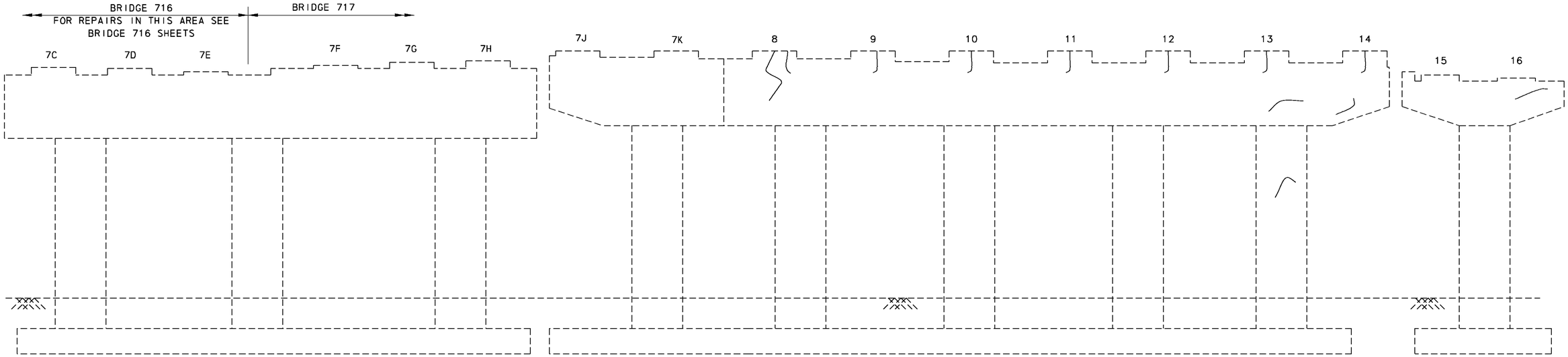

BRIDGE 717 - PIER 2
CONCRETE REPAIR (WEST ELEVATION)

NOT TO SCALE

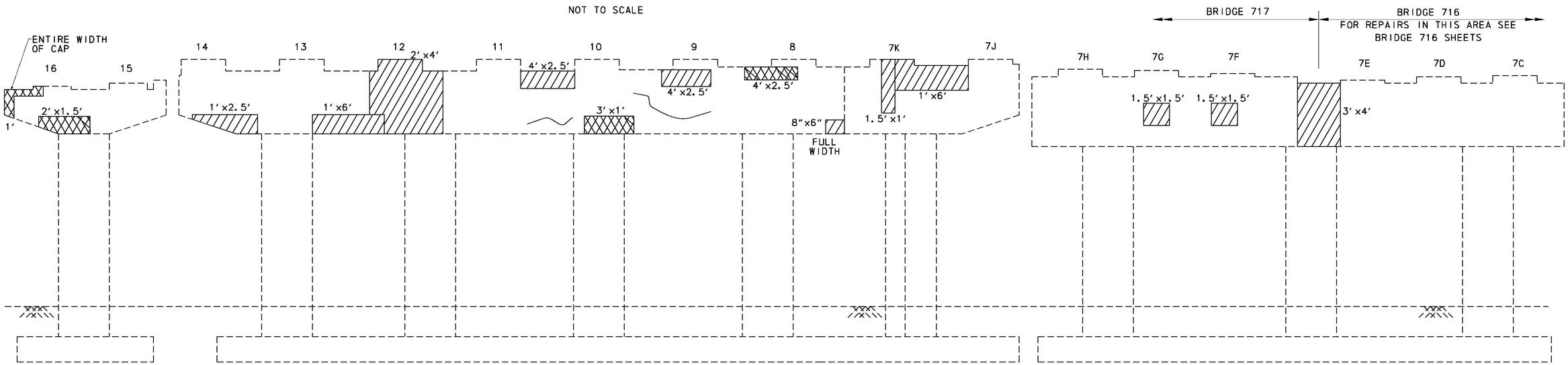

BRIDGE 717 - PIER 2
CONCRETE REPAIR (EAST ELEVATION)

NOT TO SCALE

NOTES:

1. PIER CONCRETE REPAIRS SHOWN GRAPHICALLY. REPAIR AREAS ARE BASED ON FIELD INSPECTION OBSERVATIONS TAKEN IN FEBRUARY/MARCH 2009. THE CONCRETE REPAIR QUANTITIES FOR ITEMS 602572, 602586, 602611 AND 602626 (AS APPLICABLE) HAVE BEEN INCREASED TO ACCOUNT FOR ADDITIONAL QUANTITIES DUE TO REMOVAL OF UNSOUND, LOOSE AND/OR DELAMINATED CONCRETE AND/OR LATENT DEFECTS THAT MAY HAVE OCCURED SINCE THE INSPECTIONS.

LEGEND:

- DEEP SPALL REPAIR
- DELAMINATED CONCRETE AND/OR SHALLOW SPALL REPAIR
- CRACK REPAIR

RH-10

DELAWARE DEPARTMENT OF TRANSPORTATION	ADDENDUMS / REVISIONS	SR1/I-95 INTERCHANGE - CHRISTIANA MALL ROAD BRIDGE	CONTRACT T201009004	BRIDGE NO. 1-717	BRIDGE 717 REHABILITATION CONCRETE REPAIRS PIER 2	SHEET NO. 90
			COUNTY NEW CASTLE	DESIGNED BY: DWD		TOTAL SHTS. 164
				CHECKED BY: JSW		

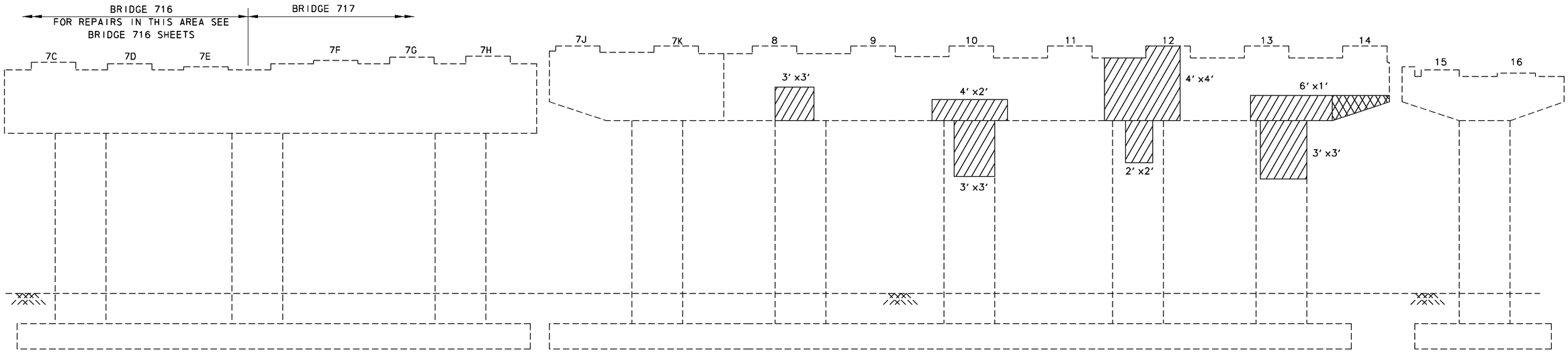

BRIDGE 717 - PIER 3
CONCRETE REPAIR (WEST ELEVATION)

NOT TO SCALE

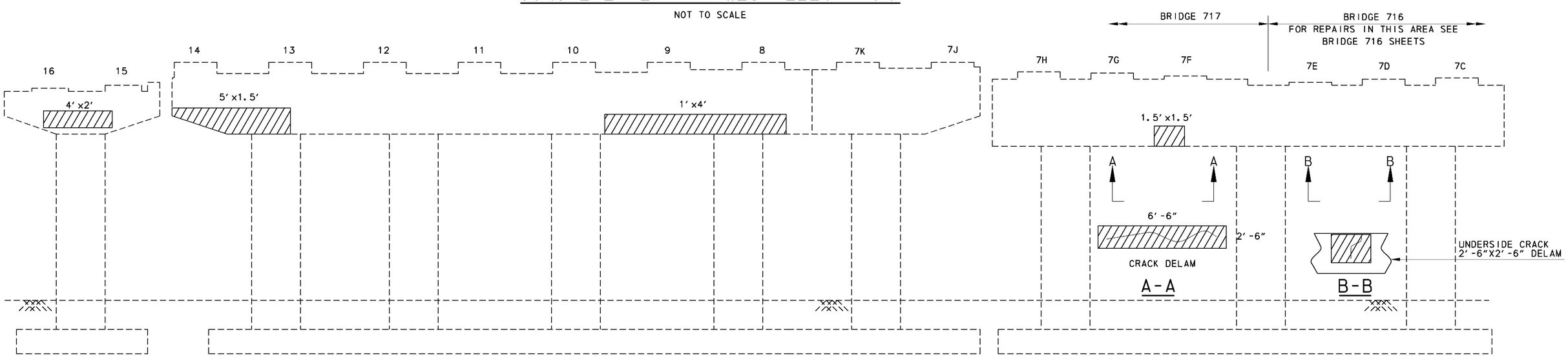

NOTES:

1. PIER CONCRETE REPAIRS SHOWN GRAPHICALLY. REPAIR AREAS ARE BASED ON FIELD INSPECTION OBSERVATIONS TAKEN IN FEBRUARY/MARCH 2009. THE CONCRETE REPAIR QUANTITIES FOR ITEMS 602572, 602586, 602611 AND 602626 (AS APPLICABLE) HAVE BEEN INCREASED TO ACCOUNT FOR ADDITIONAL QUANTITIES DUE TO REMOVAL OF UNSOUND, LOOSE AND/OR DELAMINATED CONCRETE AND/OR LATENT DEFECTS THAT MAY HAVE OCCURED SINCE THE INSPECTIONS.

LEGEND:

- DEEP SPALL REPAIR
- DELAMINATED CONCRETE AND/OR SHALLOW SPALL REPAIR
- CRACK REPAIR

BRIDGE 717 - PIER 3
CONCRETE REPAIR (EAST ELEVATION)

NOT TO SCALE

DELAWARE DEPARTMENT OF TRANSPORTATION	ADDENDUMS / REVISIONS	SR1/I-95 INTERCHANGE - CHRISTIANA MALL ROAD BRIDGE	CONTRACT T201009004	BRIDGE NO. 1-717	BRIDGE 717 REHABILITATION CONCRETE REPAIRS PIER 3	RH-11	
			COUNTY NEW CASTLE	DESIGNED BY: DWD		SHEET NO. 91	
				CHECKED BY: JSW		TOTAL SHTS. 164	

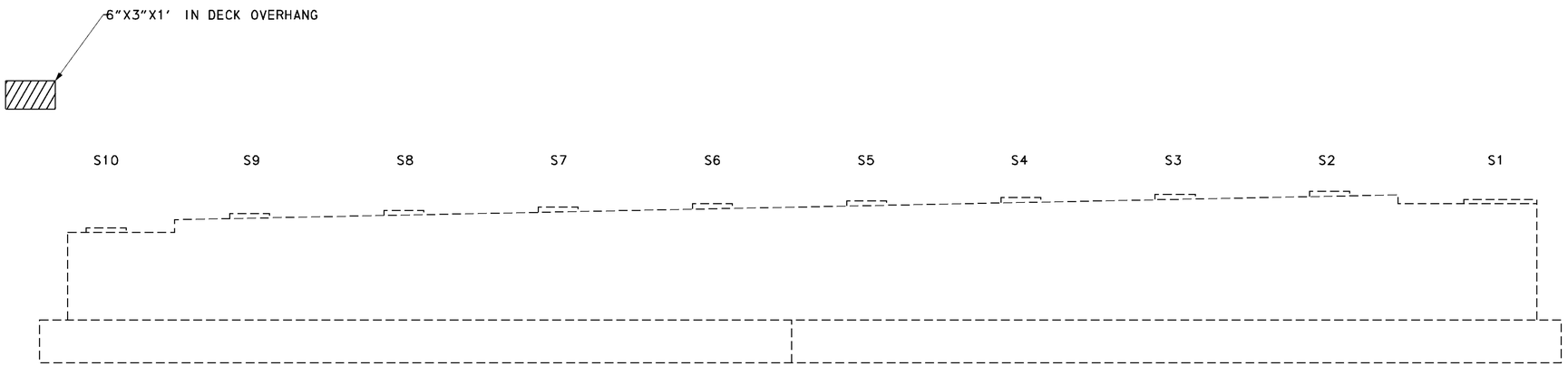

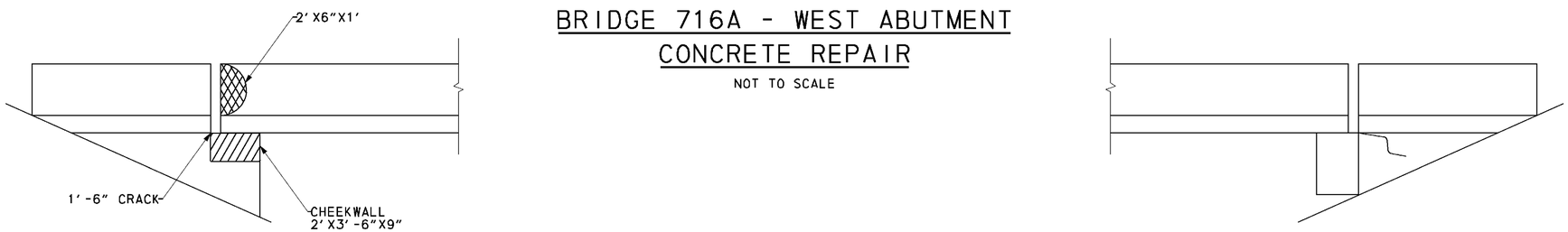

BRIDGE 716A - WEST ABUTMENT
CONCRETE REPAIR

NOT TO SCALE

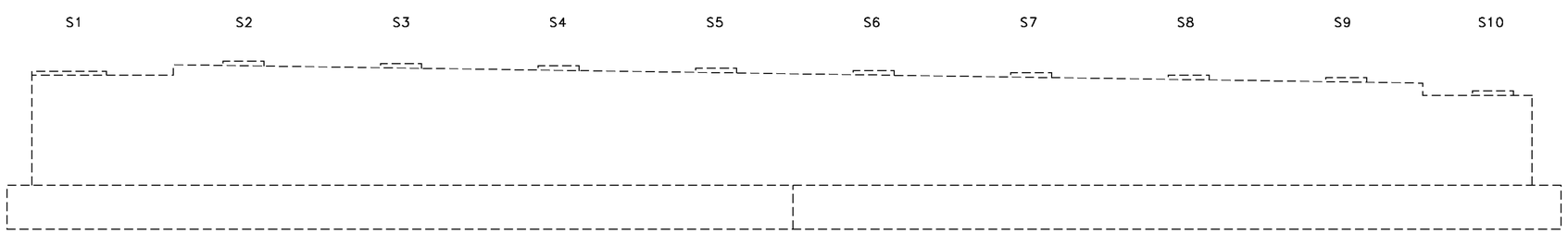

BRIDGE 716A - EAST ABUTMENT
CONCRETE REPAIR

NOT TO SCALE

NOTE:

1. ABUTMENT CONCRETE REPAIRS SHOWN GRAPHICALLY. REPAIR AREAS ARE BASED ON FIELD INSPECTION OBSERVATIONS TAKEN IN FEBRUARY/MARCH 2009. THE CONCRETE REPAIR QUANTITIES FOR ITEMS 602572, 602586, 602611 AND 602626 (AS APPLICABLE) HAVE BEEN INCREASED TO ACCOUNT FOR ADDITIONAL QUANTITIES DUE TO REMOVAL OF UNSOUND, LOOSE AND/OR DELAMINATED CONCRETE AND/OR LATENT DEFECTS THAT MAY HAVE OCCURED SINCE THE INSPECTIONS.

LEGEND:

- DEEP SPALL REPAIR
- DELAMINATED CONCRETE AND/OR SHALLOW SPALL REPAIR
- CRACK REPAIR

RH-12

DELAWARE DEPARTMENT OF TRANSPORTATION	ADDENDUMS / REVISIONS	SR1/I-95 INTERCHANGE - CHRISTIANA MALL ROAD BRIDGE	CONTRACT T201009004	BRIDGE NO. 1-716A	BRIDGE 716A REHABILITATION CONCRETE REPAIRS ABUTMENTS	SHEET NO. 92
			COUNTY NEW CASTLE	DESIGNED BY: DWD		TOTAL SHTS. 164
				CHECKED BY: JSW		

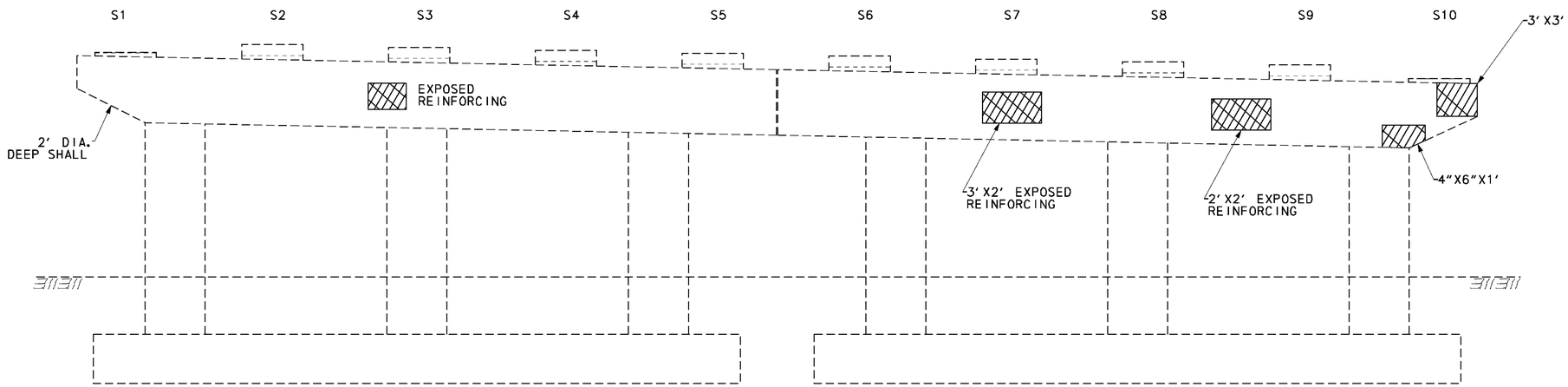

BRIDGE 716A - PIER 1
CONCRETE REPAIR (WEST ELEVATION)

NOT TO SCALE

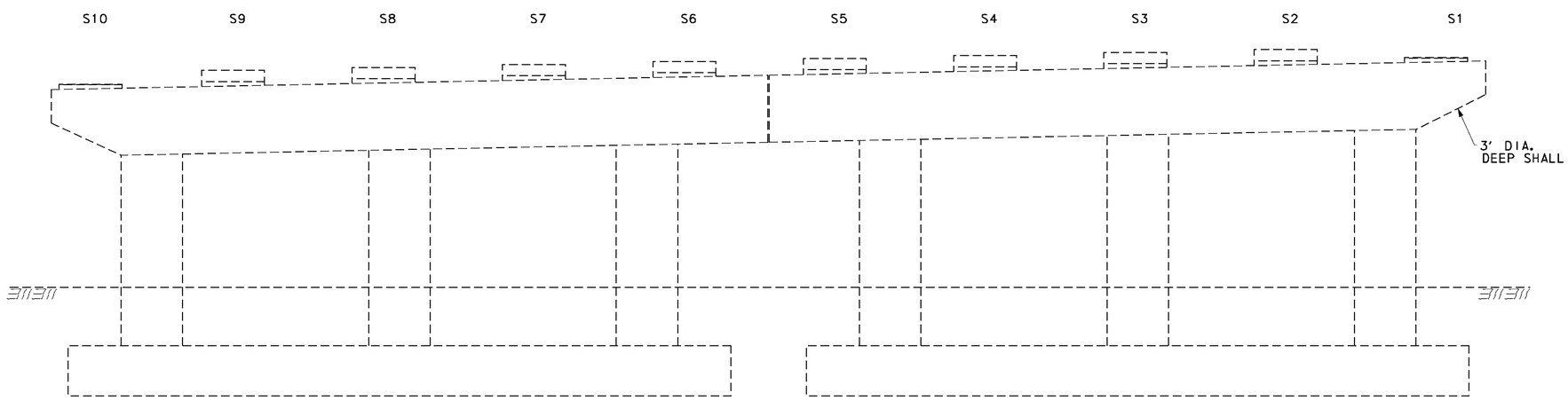

BRIDGE 716A - PIER 1
CONCRETE REPAIR (EAST ELEVATION)

NOT TO SCALE

NOTE:

1. PIER CONCRETE REPAIRS SHOWN GRAPHICALLY. REPAIR AREAS ARE BASED ON FIELD INSPECTION OBSERVATIONS TAKEN IN FEBRUARY/MARCH 2009. THE CONCRETE REPAIR QUANTITIES FOR ITEMS 602572, 602586, 602611 AND 602626 (AS APPLICABLE) HAVE BEEN INCREASED TO ACCOUNT FOR ADDITIONAL QUANTITIES DUE TO REMOVAL OF UNSOUND, LOOSE AND/OR DELAMINATED CONCRETE AND/OR LATENT DEFECTS THAT MAY HAVE OCCURED SINCE THE INSPECTIONS.

LEGEND:

- DEEP SPALL REPAIR
- DELAMINATED CONCRETE AND/OR SHALLOW SPALL REPAIR
- CRACK REPAIR

DELAWARE DEPARTMENT OF TRANSPORTATION	ADDENDUMS / REVISIONS	SR1/I-95 INTERCHANGE - CHRISTIANA MALL ROAD BRIDGE	CONTRACT T201009004	BRIDGE NO. 1-716A	BRIDGE 716A REHABILITATION CONCRETE REPAIRS PIER 1	RH-13	
			COUNTY NEW CASTLE	DESIGNED BY: DWD		SHEET NO. 93	
				CHECKED BY: JSW		TOTAL SHTS. 164	

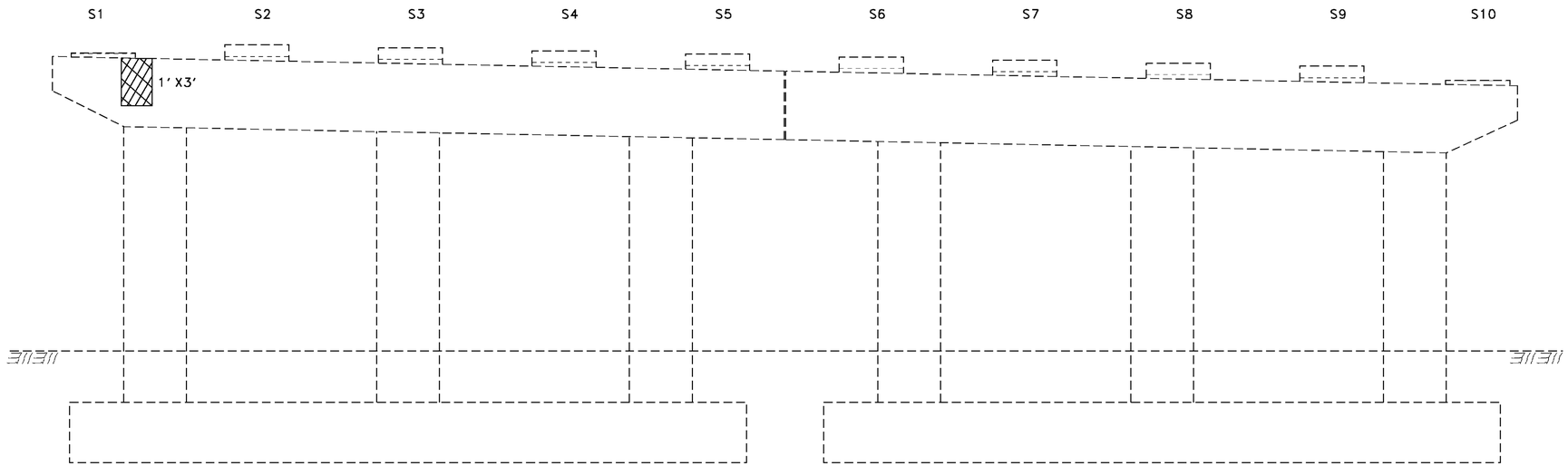

BRIDGE 716A - PIER 2
CONCRETE REPAIR (WEST ELEVATION)
NOT TO SCALE

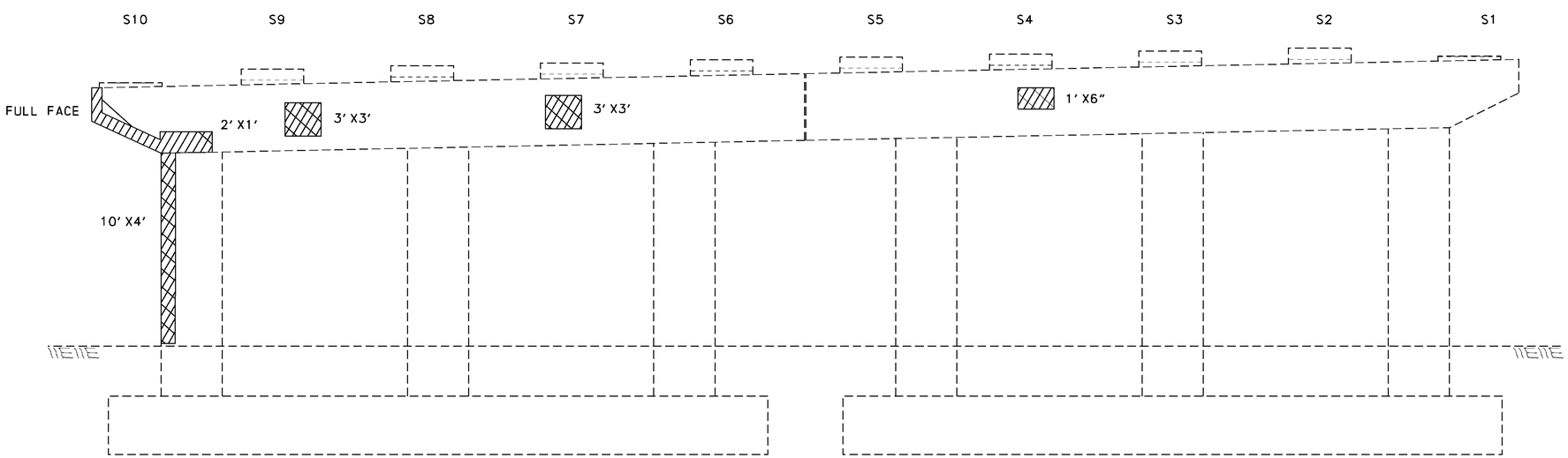

BRIDGE 716A - PIER 2
CONCRETE REPAIR (EAST ELEVATION)
NOT TO SCALE

NOTE:
1. PIER CONCRETE REPAIRS SHOWN GRAPHICALLY. REPAIR AREAS ARE BASED ON FIELD INSPECTION OBSERVATIONS TAKEN IN FEBRUARY/MARCH 2009. THE CONCRETE REPAIR QUANTITIES FOR ITEMS 602572, 602586, 602611 AND 602626 (AS APPLICABLE) HAVE BEEN INCREASED TO ACCOUNT FOR ADDITIONAL QUANTITIES DUE TO REMOVAL OF UNSOUND, LOOSE AND/OR DELAMINATED CONCRETE AND/OR LATENT DEFECTS THAT MAY HAVE OCCURED SINCE THE INSPECTIONS.

LEGEND:

- DEEP SPALL REPAIR
- DELAMINATED CONCRETE AND/OR SHALLOW SPALL REPAIR
- CRACK REPAIR

RH-14

DELAWARE DEPARTMENT OF TRANSPORTATION	ADDENDUMS / REVISIONS	SR1/I-95 INTERCHANGE - CHRISTIANA MALL ROAD BRIDGE	CONTRACT T201009004	BRIDGE NO. 1-716A	BRIDGE 716A REHABILITATION CONCRETE REPAIRS PIER 2	SHEET NO. 94
			COUNTY NEW CASTLE	DESIGNED BY: DWD		TOTAL SHTS. 164
				CHECKED BY: JSW		

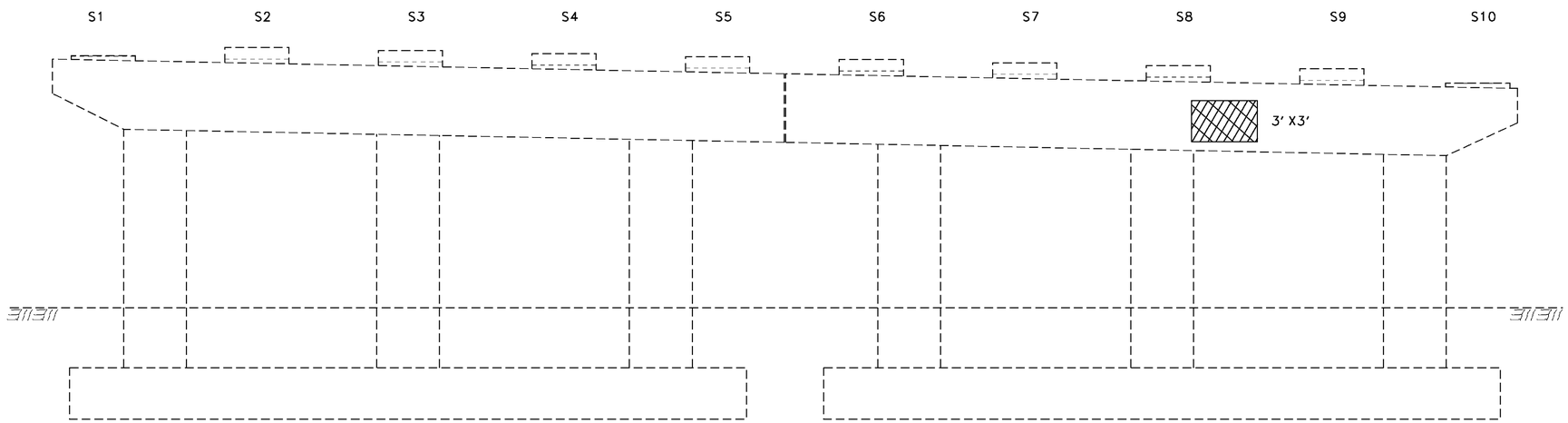

BRIDGE 716A - PIER 3
CONCRETE REPAIR (WEST ELEVATION)
NOT TO SCALE

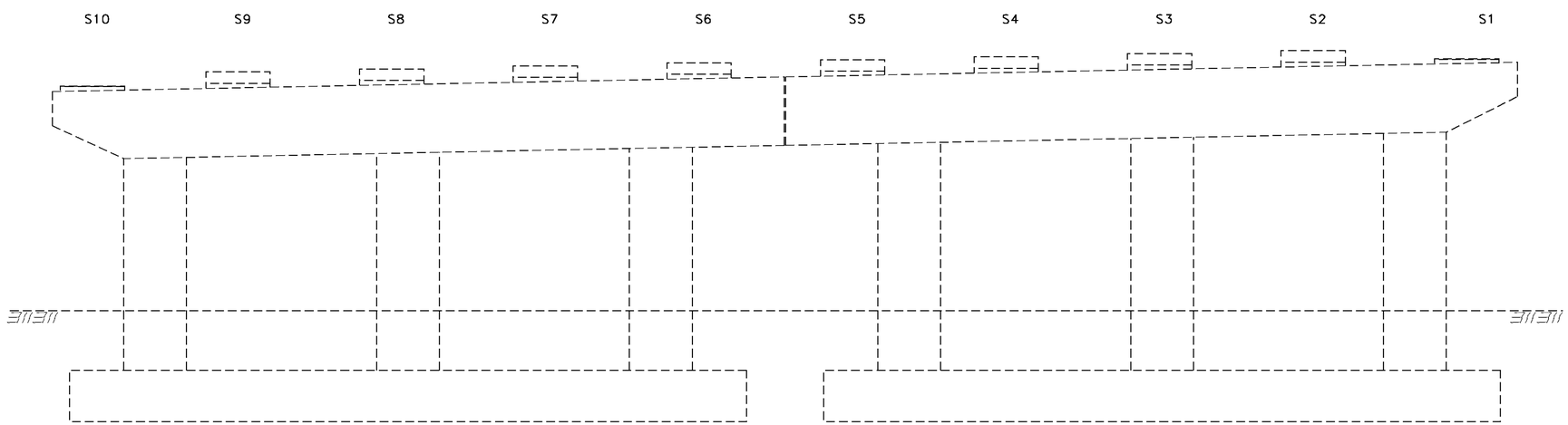

BRIDGE 716A - PIER 3
CONCRETE REPAIR (EAST ELEVATION)
NOT TO SCALE

NOTE:
1. PIER CONCRETE REPAIRS SHOWN GRAPHICALLY. REPAIR AREAS ARE BASED ON FIELD INSPECTION OBSERVATIONS TAKEN IN FEBRUARY/MARCH 2009. THE CONCRETE REPAIR QUANTITIES FOR ITEMS 602572, 602586, 602611 AND 602626 (AS APPLICABLE) HAVE BEEN INCREASED TO ACCOUNT FOR ADDITIONAL QUANTITIES DUE TO REMOVAL OF UNSOUND, LOOSE AND/OR DELAMINATED CONCRETE AND/OR LATENT DEFECTS THAT MAY HAVE OCCURED SINCE THE INSPECTIONS.

LEGEND:

- DEEP SPALL REPAIR
- DELAMINATED CONCRETE AND/OR SHALLOW SPALL REPAIR
- CRACK REPAIR

RH-15

DELAWARE DEPARTMENT OF TRANSPORTATION	ADDENDUMS / REVISIONS	SR1/I-95 INTERCHANGE - CHRISTIANA MALL ROAD BRIDGE	CONTRACT T201009004	BRIDGE NO. 1-716A	BRIDGE 716A REHABILITATION CONCRETE REPAIRS PIER 3	SHEET NO. 95
			COUNTY NEW CASTLE	DESIGNED BY: DWD		TOTAL SHTS. 164
				CHECKED BY: JSW		

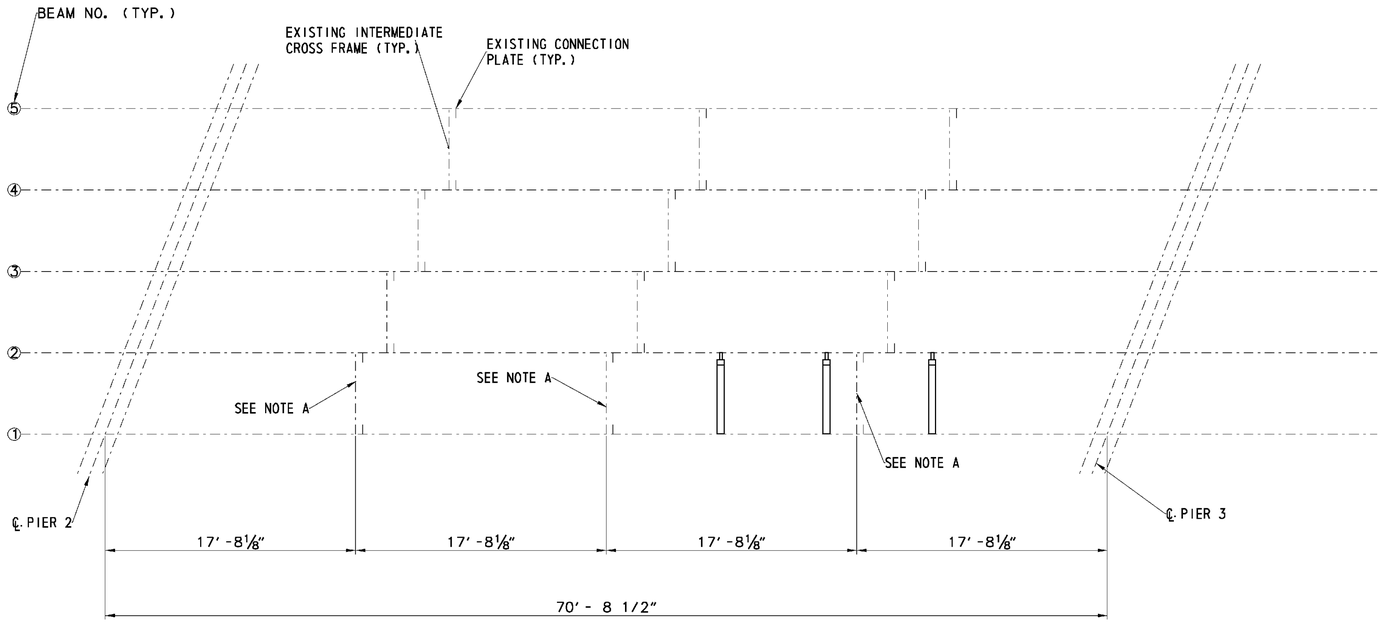

PARTIAL FRAMING PLAN
SCALE: 3/16" = 1'-0"

NOTE A:

IF IT IS DETERMINED DURING THE HEAT STRAIGHTENING PROCEDURES THAT THESE CROSS-FRAMES ARE HINDERING THE PROCESS, THE CONTRACTOR IS HEREBY PERMITTED TO DISCONNECT THE EXISTING CROSS-FRAMES FROM THE CONNECTION PLATES ONLY DURING THE HEAT STRAIGHTENING OPERATIONS. ONCE THE HEAT STRAIGHTENING OPERATIONS HAVE BEEN COMPLETED, THE EXISTING CROSS-FRAME SHALL BE RECONNECTED TO THE CONNECTION PLATES. COST FOR THIS WORK WILL NOT BE MEASURED BUT WILL BE INCIDENTAL TO ITEM 605551.

SUGGESTED SEQUENCE OF HEAT STRAIGHTENING:

1. CONTRACTOR SHALL MEASURE WEB AND FLANGE DISTORTION PRIOR TO BEGINNING WORK. SUBMIT MEASUREMENTS AND REPAIR PROCEDURES TO ENGINEER.
2. PRIOR TO HEAT STRAIGHTENING, GRIND OUT ALL EXISTING GOUGES AND WELDS FROM ALL BEAMS TO BE REPAIRED. SEE GOUGE REPAIR NOTES BELOW.
3. INSTALL TIMBERS AND JACKS BETWEEN BEAM NOS. 1 AND 2 AS INDICATED ON THIS SHEET PRIOR TO REPLACEMENT OF INTERMEDIATE CROSS-FRAMES BUT AFTER BOTTOM FLANGE REPAIRS ARE COMPLETED.

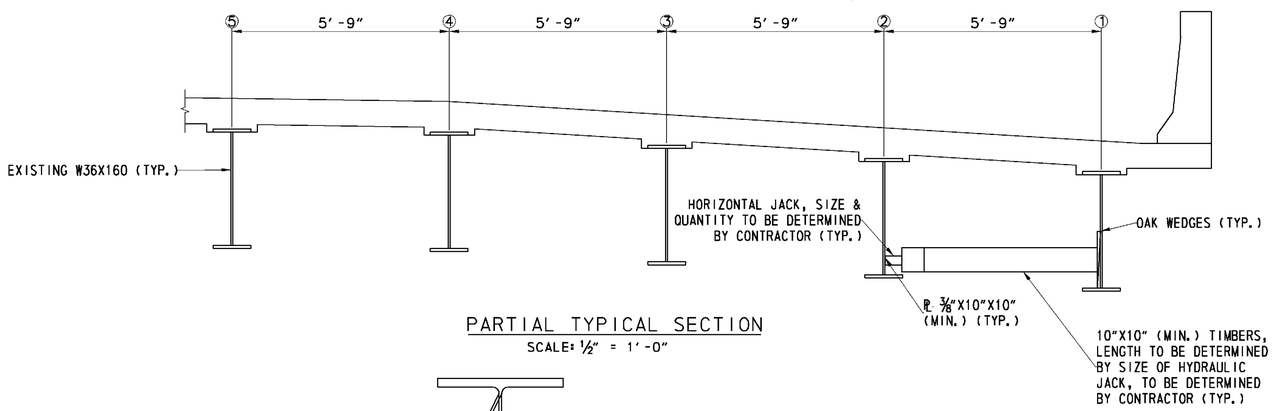

PARTIAL TYPICAL SECTION
SCALE: ½" = 1'-0"

GOUGE REPAIR NOTES:

1. THE GRINDING OF EXISTING STEEL SHALL RESULT IN A SURFACE THAT IS SUITABLE FOR PERFORMING THE SINGLE-V GROOVE WELD USING STRINGER PASSES.
2. CONTRACTOR SHALL INSPECT THE GOUGE AREA, FOLLOWING GRINDING, IN THE PRESENCE OF THE ENGINEER, USING MAGNETIC PARTICLE TESTING. CONTRACTOR SHALL ALSO INSPECT/TEST FOR CRACKS IN THE BASE METAL USING MAGNETIC PARTICLE TESTING. CONTRACTOR SHALL IMMEDIATELY NOTIFY THE ENGINEER IF THE CRACK TERMINI IS LOCATED BEYOND THE WELD AREA AND INTO THE BASE METAL OF THE BEAM. WORK AT THE REPAIR LOCATION SHALL BE STOPPED IMMEDIATELY. THE CONTRACTOR SHALL NOT PROCEED WITH ANY WORK AT THIS LOCATION UNTIL DIRECTED BY THE ENGINEER. SURFACES OF THE FLANGE TO BE RE-WELDED SHALL BE CLEANED IN CONFORMANCE WITH SECTION 3.11.1 OF AASHTO/AWS D1.5.
3. START OF ¾" RADIUS FOR GOUGE GRIND OUT SHALL BEGIN PAST END OF GOUGE.
4. RUN-OFF TABS SHALL BE INSTALLED TO ALLOW THE WELD TO CONTINUE BEYOND THE EDGE OF THE BOTTOM FLANGE. THE SINGLE-V GROOVE WELD SHALL BE PERFORMED USING STRINGER PASSES - NO WEAVE PASSES WILL BE PERMITTED. STARTING AND STOPPING OF EACH STRINGER PASS SHALL ONLY OCCUR ON THE RUN-OFF TABS. AFTER COMPLETION OF WELDING OPERATION, THE CONTRACTOR SHALL REMOVE THE RUN-OFF TABS AND GRIND FLUSH ALL WELDMENTS, INCLUDING THOSE USED TO SECURE THE RUN-OFF TABS, TO THE ORIGINAL INTENDED CONDITION HAVING A SURFACE FINISH OF 125 MICROINCHES PER INCH RWS. GRINDING OR SANDING SHALL BE IN THE DIRECTION OF STRESS (PARALLEL TO THE LONGITUDINAL AXIS OF THE GIRDER.)
5. HYDROGEN DIFFUSION POSTHEAT TREATMENT SHALL BE PERFORMED IN CONFORMANCE WITH 12.15.1.2 OF AASHTO/AWS D1.5 AT EACH SINGLE-V GROOVE WELD LOCATION.
6. THE SURFACES OF THE BOTTOM FLANGE TO BE RE-WELDED SHALL BE CLEANED IN CONFORMANCE WITH SECTION 3.11.1 OF AASHTO/AWS D1.5. REPAIR AREA SHALL BE WELDED BY A ⅜" FILLET WELD FOLLOWING AN APPROVED WELDING PROCEDURE IN ACCORDANCE WITH AASHTO/AWS D1.5.
7. AFTER THE HYDROGEN DIFFUSION POSTHEAT TREATMENT, THE ENTIRE SINGLE-V GROOVE WELD REPAIR AT EACH GOUGE LOCATION SHALL BE INSPECTED USING THE ULTRASONIC TESTING METHOD (UT) AND THE MAGNETIC PARTICLE TESTING METHOD (MT). THE RESULTS OF THESE TESTS SHALL BE SUBMITTED TO THE DEPARTMENT.
8. THE REPAIR AT AN INDIVIDUAL GOUGE LOCATION SHALL BE COMPLETED IN ITS ENTIRETY PRIOR TO PROCEEDING WITH THE REPAIR AT ANOTHER LOCATION.

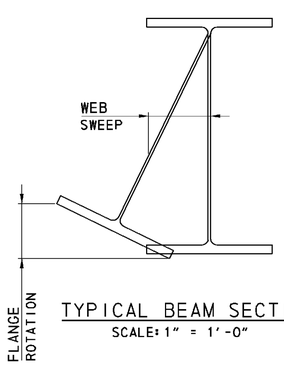

TYPICAL BEAM SECTION
SCALE: 1" = 1'-0"

NOTE:

MEASURE FLANGE OUT-OF-PLACE ROTATION AND WEB OUT-OF-PLANE IN 1'-0" MAXIMUM INCREMENTS DISTORTION SHALL BE MEASURED IN ".

NOTES:

1. OAK WEDGES SHALL BE IN LIKE NEW CONDITION FREE OF CRACKS, SPLITS AND/OR ROTTED PORTIONS.
2. TIMBER BLOCKING SHALL BE UNTREATED SOUTHERN YELLOW PINE CONFORMING TO THE REQUIREMENTS OF AASHTO M 168 SELECT STRUCTURAL NO. 1.

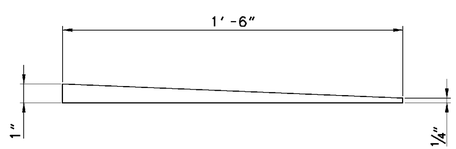

TYPICAL OAK WEDGE
SCALE: 3" = 1'-0"

10/7/2010 5:07:09 PM
M:\PROJECTS\2003\03059_DELTRNPK\SRMALL\CADD\3009004\PLANS\RH16_RAWPR1.DGN

DELAWARE DEPARTMENT OF TRANSPORTATION	ADDENDUMS / REVISIONS	SR1/I-95 INTERCHANGE - CHRISTIANA MALL ROAD BRIDGE	CONTRACT T201009004	BRIDGE NO. 1-716	BRIDGE 716 REHABILITATION HEAT STRAIGHTENING REPAIR DETAILS I	RH-16
			COUNTY NEW CASTLE	DESIGNED BY: DWD		SHEET NO. 96
				CHECKED BY: JSW		TOTAL SHTS. 164

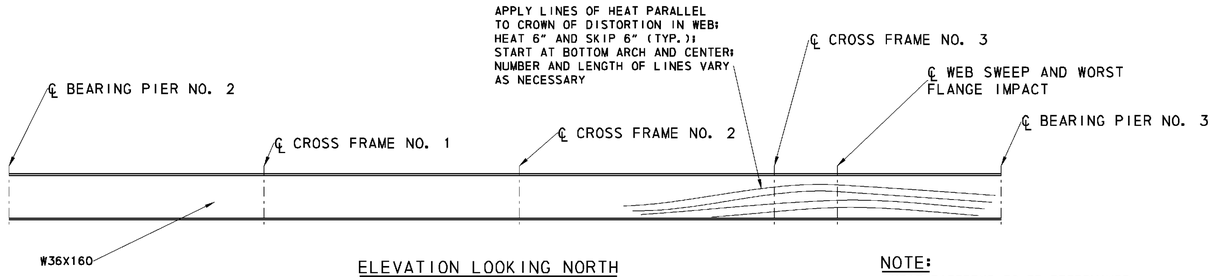

ELEVATION LOOKING NORTH
SCALE: 3/16" = 1'-0"

NOTE:
HEAT PATTERNS TO BE DETERMINED BY CONTRACTOR AND SUBMITTED TO ENGINEER FOR REVIEW.

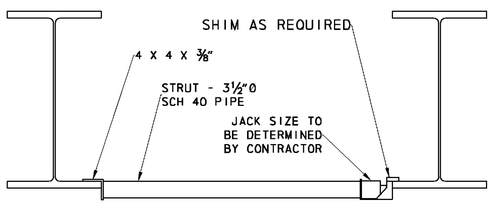

ALTERNATE JACK STRUT
SCALE: ¾" = 1'-0"

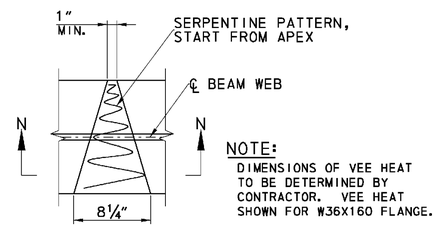

NOTE:
DIMENSIONS OF VEE HEAT TO BE DETERMINED BY CONTRACTOR. VEE HEAT SHOWN FOR W36X160 FLANGE.

TYPICAL VEE HEAT PATTERN
SCALE: 1½" = 1'-0"

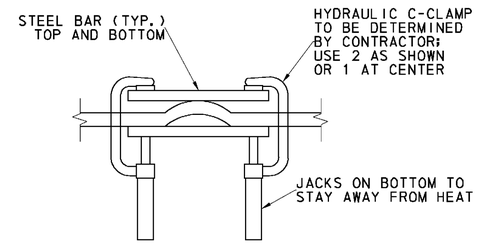

FLANGE STRAIGHTENING DEVICE
SCALE: 1½" = 1'-0"

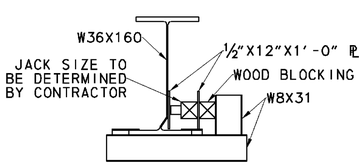

WEB STRAIGHTENING DEVICE
SCALE: 1" = 1'-0"

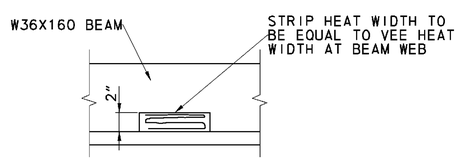

VIEW N-N
SCALE: 3" = 1'-0"

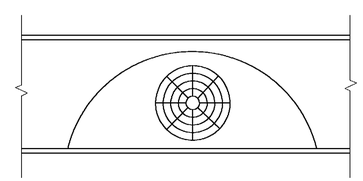

LOCAL WEB BULGE HEATING PATTERN
SCALE: 1" = 1'-0"

GENERAL HEATING PROCEDURES:

1. TORCH TIP SIZES ARE LIMITED TO 1" DIAMETER MAXIMUM, UNLESS APPROVED BY THE ENGINEER.
2. HEAT SHALL BE BROUGHT UP TO BETWEEN 1000° F AND 1150° F AS RAPIDLY AS POSSIBLE. TEMPERATURE INDICATING CRAYONS SHALL BE USED TO CLOSELY MONITOR THE STEEL TEMPERATURE AFTER THE FLAME HAS BEEN REMOVED. NO HEATING, INCLUDING LOCAL SURFACE HEATING, SHALL OCCUR ABOVE 1200° F.
3. AIR COOL STEEL DOWN TO 250° F. NO FORCED AIR COOLING WILL BE PERMITTED.
4. ALL FOLLOWING PROCEDURES ARE GENERAL GUIDELINES AND MAY BE MODIFIED TO SUIT FIELD CONDITIONS.
5. ANY COMBINATION OF HEATING PATTERNS, INCLUDING VEE, LINE, STRIP AND SPOT HEATS, CAN BE USED BASED ON THE OPERATOR'S DISCRETION AND REACTION.

REPAIR PROCEDURE:

1. RESTRICT LIVE LOAD ON I-95 SOUTHBOUND BRIDGE BY CLOSING LANE 4 PER THE TRAFFIC RESTRICTIONS PRESENTED ON SHEET 119. SEE CONSTRUCTION PHASING PLANS FOR MAINTENANCE OF TRAFFIC DETAILS.
2. NORTHBOUND SR-7 WILL BE CLOSED TO TRAFFIC UTILIZING DETOUR PLAN 6 PER THE TRAFFIC RESTRICTIONS PRESENTED ON SHEET 119.
3. REMOVE CROSS FRAMES AS REQUIRED.
4. USE MAGNETIC PARTICLE TESTING TO PRE-INSPECT AREAS TO BE REPAIRED.
5. ALL BURRS, NICKS, GOUGES AND SCRAPES SHALL BE REPAIRED AS INDICATED IN THESE PLANS PRIOR TO HEAT STRAIGHTENING.
6. INSTALL JACKS, FALSEWORK AND BLOCKING AS SHOWN. SHIM TIGHT.
7. APPLY HEAT (SEE GENERAL HEATING PROCEDURES).
8. STRAIGHTEN THE LOCAL DAMAGE TO THE BOTTOM FLANGE (SEE FLANGE STRAIGHTENING PROCEDURE) AND/OR WEB (SEE WEB STRAIGHTENING PROCEDURE) AND CORRECT THE HORIZONTAL SWEEP (SEE HORIZONTAL SWEEP CORRECTION PROCEDURE).
9. REPEAT PROCEDURES UNTIL GIRDER DIMENSIONS ARE WITHIN TOLERANCES.
10. MAGNETIC PARTICLE INSPECT ALL REPAIRED AREAS IN ACCORDANCE WITH AWS D5.1.

HORIZONTAL SWEEP CORRECTION PROCEDURE:

1. LAYOUT HEAT PATTERNS ON TOP AND BOTTOM OF BOTTOM FLANGE WITH SOAPSTONE AS SHOWN.
2. LAYOUT HEAT PATTERNS ON FACE OF WEB WITH SOAPSTONE AS SHOWN. PRIMARY HEATING AREA WILL REQUIRE MULTIPLE CYCLES. HEAT OTHER AREAS AS REQUIRED TO ACHIEVE FINAL TOLERANCES.
3. APPLY A RESTRAINING JACKING FORCE HORIZONTALLY AT LOCATIONS SHOWN. JACKING FORCE TO BE DETERMINED BY THE CONTRACTOR AND SUBMITTED TO THE ENGINEER FOR REVIEW.
4. START FLANGE HEATING PATTERNS. START AT APEX AND WORK TOWARDS THE BASE OF THE VEE IN A CONTINUOUS SERPENTINE MOTION. DO NOT RETURN TO ANY PORTION OR ANY PREVIOUSLY HEATED AREA DURING A HEATING CYCLE. USE ONE TORCH ON THE TOP AND ONE ON THE BOTTOM OF THE BOTTOM FLANGE AT EACH LOCATION. WHEN HEATING IS AT A COVER PLATE LOCATION, THE TORCH USED ON THE BEAM FLANGE MUST BE SMALLER SINCE THE FLANGE IS THINNER THAN THE COVER PATE AND WILL HEAT FASTER. WORK OUTWARD FROM THE CENTER OF THE REPAIR UNTIL ALL FLANGE PATTERNS ARE HEATED.
5. AFTER FLANGE HEATING IS COMPLETED, HEAT WEB IN PATTERN SHOWN. START IN CENTER AND WORK OUTWARD.
6. OPERATE JACKS TO MAINTAIN A RESTRAINING FORCE. THIS MUST BE MONITORED CLOSELY SINCE THE LOAD WILL DECREASE AS THE FLANGE STRAIGHTENS.
7. REPEAT THIS PROCEDURE UNTIL THE FLANGE IS WITHIN THE TOLERANCES SHOWN BELOW. HEATING LOCATIONS MAY BE THE SAME AS THE FIRST CYCLE OR MAY BE STAGGERED IF REQUIRED FOR STRAIGHTNESS.

FLANGE STRAIGHTENING PROCEDURE:

1. LOCATE JACK AND FALSEWORK AS SHOWN.
2. HEAT "CROWNS" OF FLANGE DEFORMATION AT COLLISION POINT TOWARD OUTSIDE EDGES OF THE FLANGE. THIS SHOULD BE IN THE MIDDLE ON TOP AND SIDES ON BOTTOM.
3. APPLY HEAT TO THE FILLET AREA (WEB AND BOTTOM FLANGE INTERSECTION) ON "LOW" SIDE OF FLANGE ONLY IF ENTIRE FLANGE IS TILTED.
4. INSTALL BARS AND HYDRAULIC C-CLAMPS AS SHOWN.
5. ALLOW TO COOL. MAINTAIN CONSTANT 3 TO 5 TON RESTRAINING FORCE DURING COOLING.

WEB STRAIGHTENING PROCEDURE:

NOTE: USE THIS PROCEDURE ONLY IF WEB HAS LOCAL DISTORTION NEAR BOTTOM FLANGE.

1. LOCATE WEB STRAIGHTENING DEVICE AS SHOWN. INSTALL JACK AFTER HEATING HAS BEEN COMPLETED.
2. APPLY HEAT TO SIDE OF WEB TOWARD WHICH WEB MOVED.
3. ALLOW TO COOL. MAINTAIN CONSTANT 3 TO 5 TON RESTRAINT FORCE DURING COOLING.

TOLERANCES:

1. OVERALL -½" OVER 20'
   (¾" IN 20' AT POINT OF IMPACT)
2. WEB - LOCAL DEVIATIONS 5/32" AS MEASURED WITH A STRAIGHTEDGE HELD VERTICALLY AND HORIZONTALLY.
3. LOCAL FLANGE DEVIATIONS -¼" AT EDGES.

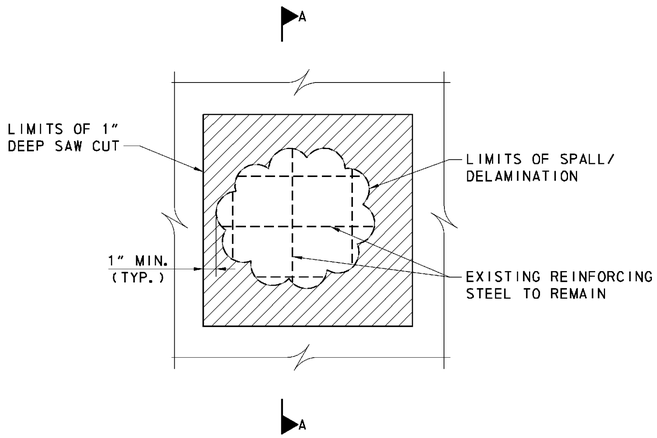

ELEVATION

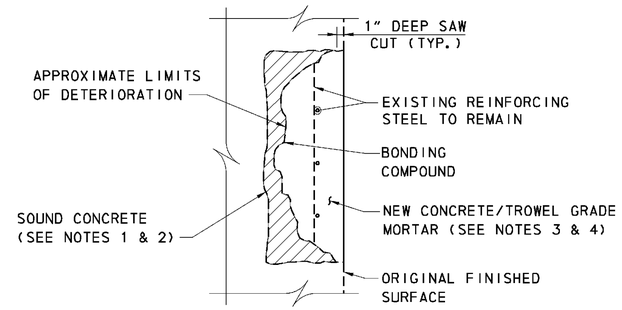

SECTION A-A

TYPICAL DETERIORATED CONCRETE REPAIR

NO SCALE

NOTES:

1. REPAIR AREA SHALL EXTEND TO SOUND CONCRETE. IF REINFORCING STEEL IS ENCOUNTERED, THE REPAIR AREA SHALL EXTEND 1" MINIMUM BEHIND REINFORCING STEEL.

2. IF SOUND CONCRETE IS NOT FOUND AT 6" BEHIND ORIGINAL FINISHED SURFACE, REMOVAL WORK SHALL STOP AND THE ENGINEER SHALL BE NOTIFIED.

3. DETERIORATED CONCRETE SHALL BE REPAIRED USING TROWEL GRADE MORTAR FOR REPAIR AREAS 1" DEEP OR LESS AND FOR CRACKS GREATER THAN ¼" WIDE.

4. DETERIORATED CONCRETE SHALL BE REPAIRED USING TROWEL GRADE CONCRETE FOR REPAIR AREAS GREATER THAN 1" IN DEPTH.

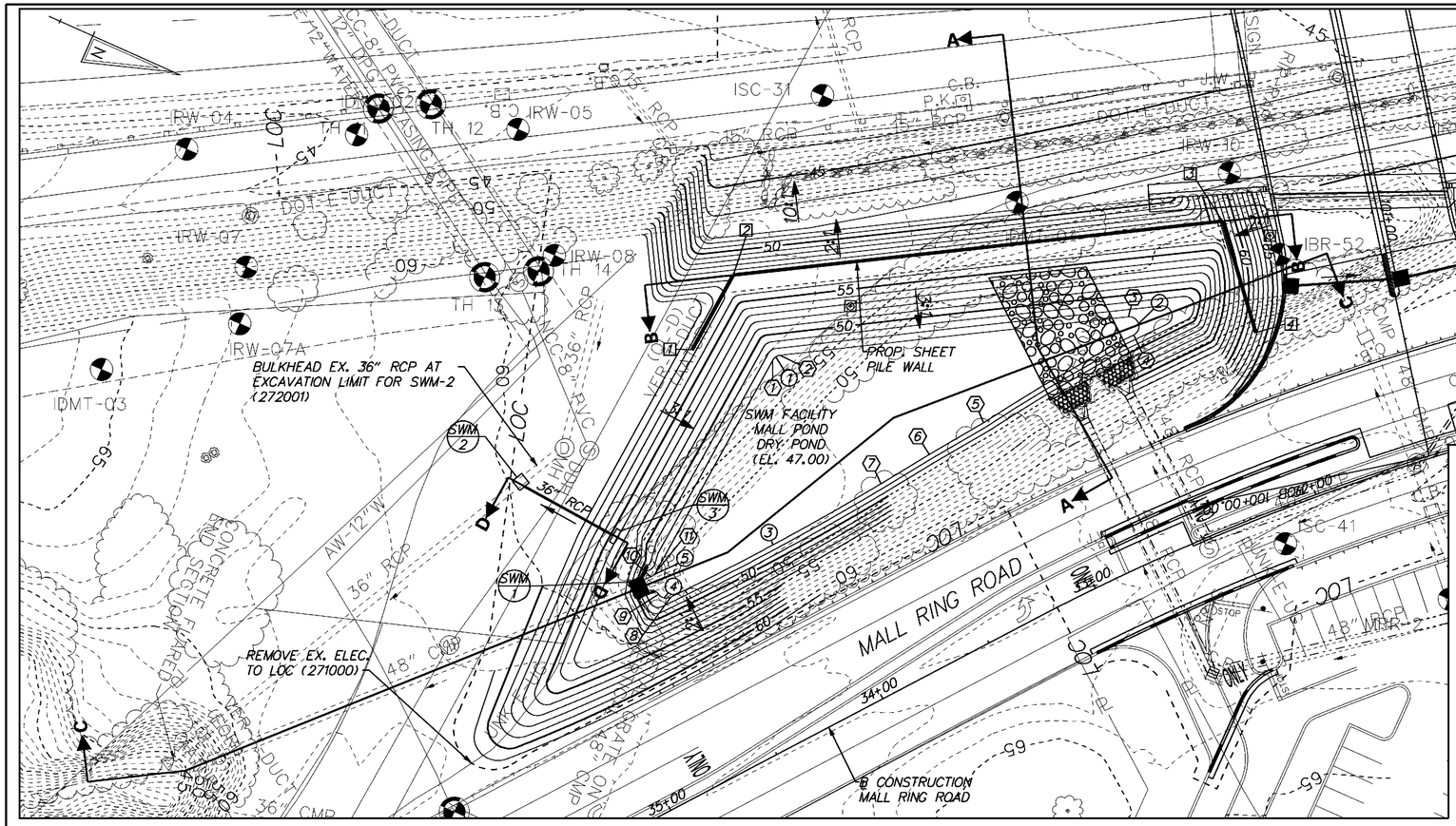

PLAN - BMP "MALL POND"

MALL POND DESIGN SUMMARY

DESIGN STORM	FACILITY INFLOW	FACILITY DISCHARGE	WATER SURFACE EL.	STORAGE VOLUME
2-YEAR	93.4 CFS	48.7 CFS	52.09 FT.	6.1 AC.-FT.
10-YEAR	146.1 CFS	65.1 CFS	54.34 FT.	9.8 AC.-FT.
100-YEAR	250.6 CFS	176.3 CFS	56.48 FT.	17.3 AC.-FT.

STORMWATER MANAGEMENT DRY POND SHALL PROVIDE QUANTITY MANAGEMENT OF 2, 10 AND 100-YEAR STORM. NO QUALITY MANAGEMENT IS PROVIDED.

HAZARD CLASSIFICATION: CLASS A AS PER POND 378 CODE

DRAINAGE AREA TO FACILITY: 28.35 ACRES

HINGE POINT LOCATION

STATION	OFFSET	ELEVATION
RAMP A STATION 1263+90	-123.7	52.6
RAMP A STATION 1264+00	-123.9	52.1
RAMP A STATION 1266+00	-131.5	48.5
RAMP A STATION 1266+50	-135.4	47.7
RAMP A STATION 1267+00	-139.4	47.2
RAMP A STATION 1267+50	-144.2	46.8
RAMP A STATION 1267+70	-146.1	46.7

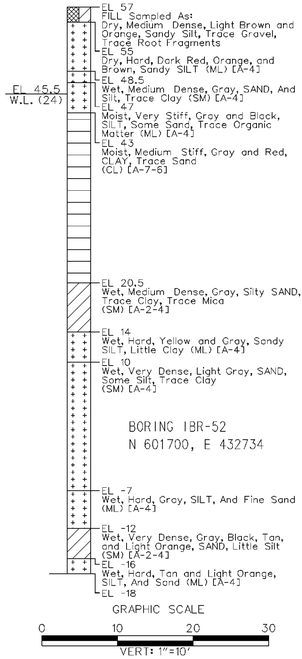

GENERAL

1. THE STORMWATER MANAGEMENT POND SHALL NOT FUNCTION AS A SEDIMENT BASIN DURING CONSTRUCTION.
2. THE STORMWATER MANAGEMENT POND SHALL BE CONSTRUCTED IN ACCORDANCE WITH THE FOLLOWING:
   SECTIONS OF THE STANDARD SPECIFICATIONS:
   SECTION 271 - STORMWATER MANAGEMENT POND
   SECTION 272 - POND OUTLET STRUCTURE, CONCRETE
   SECTION 274 - CLAY BORROW, STORMWATER MANAGEMENT POND
3. UPON COMPLETION OF POND CONSTRUCTION, AS-BUILT PLANS SHALL BE SUBMITTED TO THE NEW CASTLE COUNTY-DEPARTMENT OF LAND USE STORMWATER ENGINEER.
4. POND SURFACE TREATMENT SHALL BE: 1) 6" TOPSOIL (732002); 2) SOIL RETENTION BLANKET TYPE 3 MULCH (735533) IN AREAS STEEPER THAN 3:1 OR SOIL RETENTION BLANKET TYPE 4 MULCH (735534) IN AREAS 3:1 OR FLATTER; AND 3) PERMANENT GRASS SEEDING WET GROUND (734015) BELOW EL. 50.5 OR PERMANENT GRASS SEEDING DRY GROUND (734013) ABOVE EL. 50.5.
5. CONTRACTOR TO VERIFY UTILITY LOCATIONS BEFORE CONSTRUCTION.
6. SEE DRAINAGE SHEETS FOR RIPRAP NOTES AND STAKEOUT LOCATIONS.
7. SEE SHEET 80 FOR RETAINING WALL DETAILS.

CONSTRUCTION SEQUENCE

1. INSTALL STABILIZED CONSTRUCTION ENTRANCE AS SHOWN ON THE CONSTRUCTION PHASING PHASE 1 SHEET.
2. CLEAR AND GRUB FOR INSTALLATION OF PERIMETER EROSION AND SEDIMENT CONTROLS.
3. INSTALL PERIMETER SEDIMENT CONTROLS AS SHOWN ON THE CONSTRUCTION PHASING PHASE 1 SHEET, SURROUNDING THE STORMWATER MANAGEMENT POND CONSTRUCTION.
4. INSTALL SHEET PILE FOR MALL POND EMBANKMENT.
5. EXCAVATE THE POND AND COMPLETE THE EMBANKMENT TO LINES, GRADES AND DETAILS SHOWN IN THE CONSTRUCTION PLANS. DURING , THE CONTRACTOR SHALL SALVAGE AND STOCKPILE SOILS CLASSIFIED AS SC, CL, AND CH PER THE UNIFIED SOIL CLASSIFICATION SYSTEM TO BE USED TO CONSTRUCT EMBANKMENT. THE ABOVE CLASSIFIED SOIL MAY BE OBTAINED FROM ELSEWHERE WITHIN THE PROJECT LIMITS, IF NECESSARY.
6. CONSTRUCT STORMWATER MANAGEMENT POND OUTLET STRUCTURE AND EMERGENCY SPILLWAY STRUCTURES.
7. COMPLETE GRADING AND STABILIZE ALL BARE AREAS.

MALL POND STAKEOUT

℄ MALL RING ROAD STA. / OFFSET	NORTHING	EASTING	CURVE NO.	RADIUS
1 33+74.9, 146.6 RT.	610,524.9	432,861.0	1	4'
2 33+71.2, 147.0 RT.	610,526.8	432,857.8	2	4'
3 33+43.5, 97.8 RT.	610,653.0	432,783.6	3	15'
4 32+44.3, 89.9 RT.	610,658.0	432,789.7	4	4'
5 33+10.9, 82.7 RT.	610,615.9	432,848.8	5	4'
6 33+35.3, 81.3 RT.	610,600.7	432,870.1		
7 33+58.9, 79.9 RT.	610,587.2	432,889.5		
8 34+58.7, 78.8 RT.	610,526.5	432,968.7		
9 34+62.5, 82.2 RT.	610,521.5	432,969.6		
10 34+61.9, 90.2 RT.	610,515.6	432,964.2		
11 34+59.1, 91.0 RT.	610,516.7	432,961.6		
1 34+02.5, 166.1 RT.	610,492.5	432,870.7		
2 33+72.8, 185.7 RT.	610,495.4	432,835.2		
3 31+97.3, 120.6 RT.	610,672.5	432,731.1		
4 32+00.1, 72.1 RT.	610,704.2	432,768.0		

GRAPHIC SCALE
0 30 60 — HORIZ: 1"=30'
0 3 6 — VERT: 1"=3'

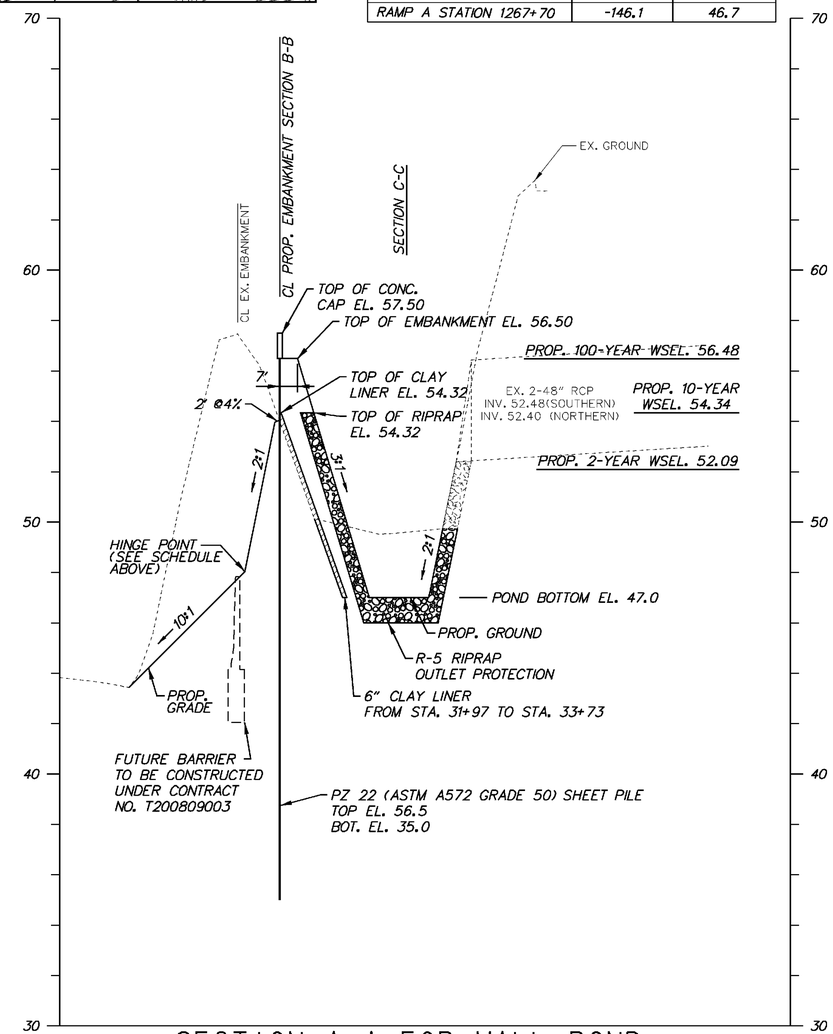

SECTION A-A FOR MALL POND

DELAWARE DEPARTMENT OF TRANSPORTATION

ADDENDUMS / REVISIONS

SCALE
0 30 60 90
FEET

SR1 / I-95 INTERCHANGE - CHRISTIANA MALL ROAD BRIDGE

CONTRACT	BRIDGE NO.	1-223
T201009004	DESIGNED BY:	CPS
COUNTY		
NEW CASTLE	CHECKED BY:	REP

STORMWATER MANAGEMENT DETAILS CHRISTIANA MALL SWM FACILITY

SHEET NO. 99
TOTAL SHTS. 164

9/9/2010 3:36:37 PM
M:\PROJECTS\2003\03059_DELTRNPK\SRIMALL\CADD\3009004\PLANS\SW01_RAMPR1.DGN

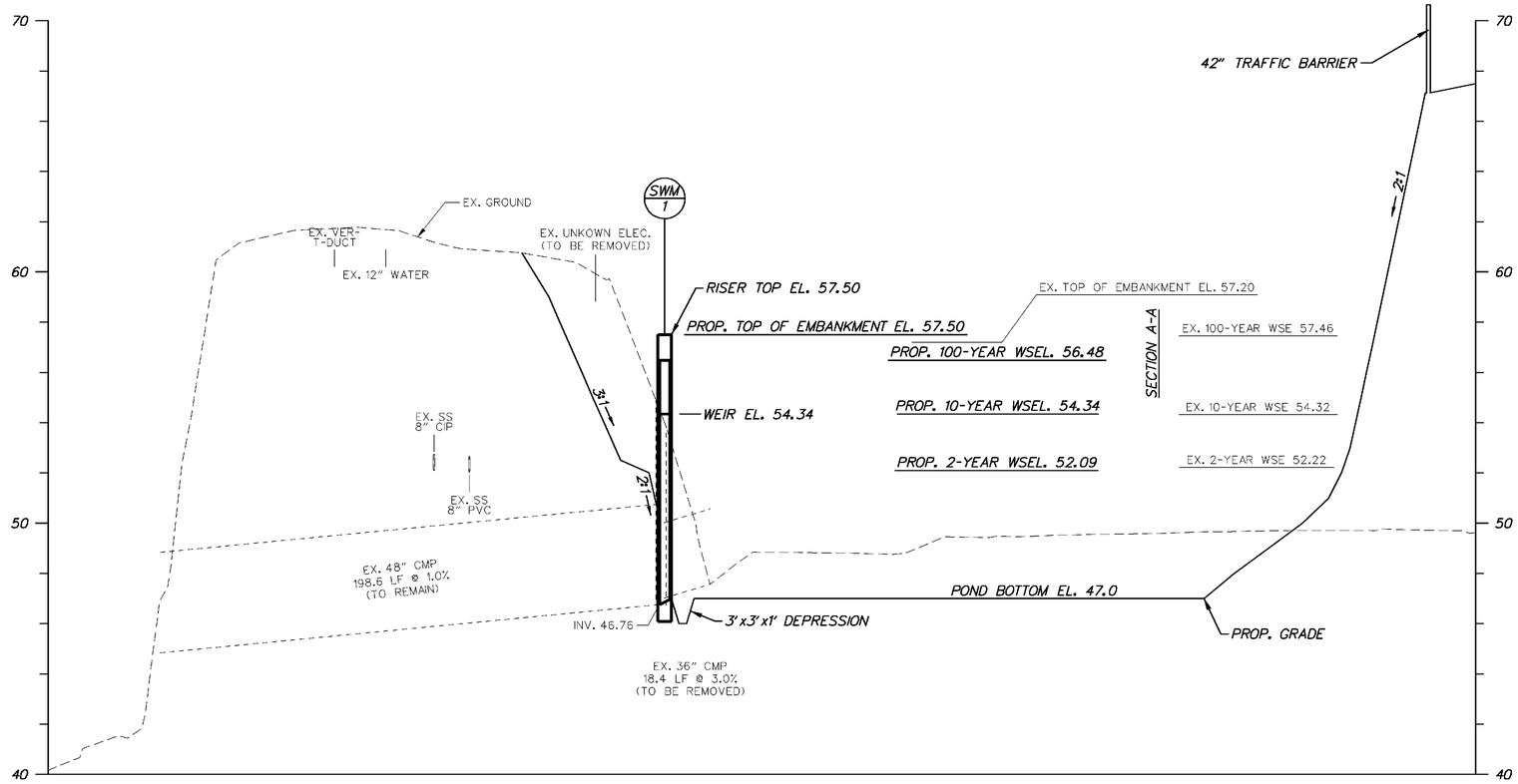

SPILLWAY PROFILE SECTION C-C FOR MALL POND

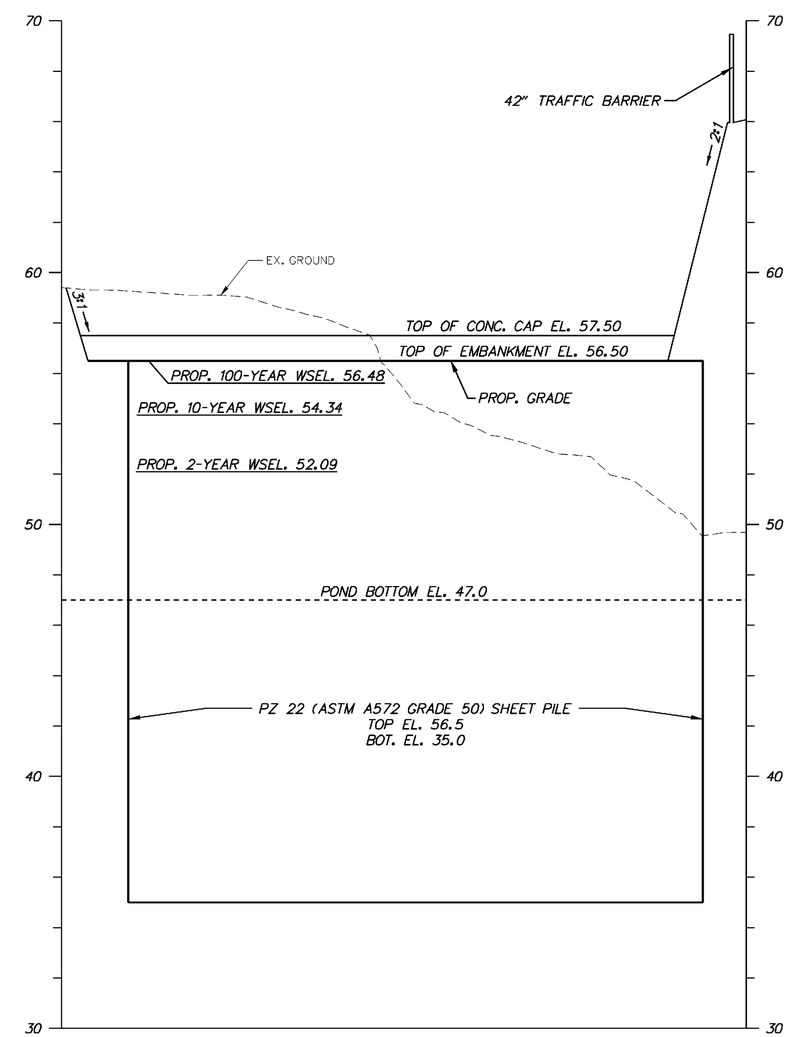

EMBANKMENT PROFILE SECTION B-B FOR MALL POND

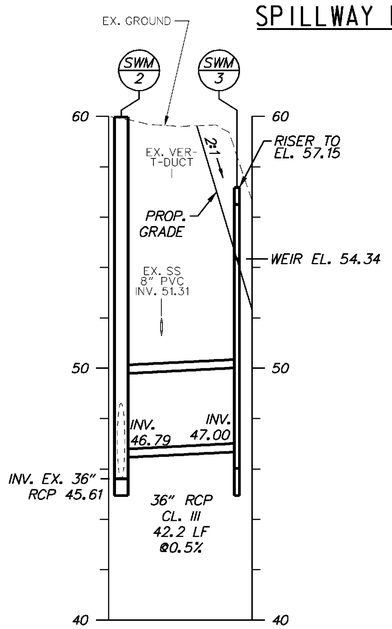

EMERGENCY SPILLWAY PROFILE SECTION D-D FOR MALL POND

DELAWARE DEPARTMENT OF TRANSPORTATION	ADDENDUMS / REVISIONS	0 30 60 HORIZ: 1"=30' 0 3 6 VERT: 1"=3'	SR1/I-95 INTERCHANGE - CHRISTIANA MALL ROAD BRIDGE	CONTRACT T201009004	BRIDGE NO. 1-223	STORMWATER MANAGEMENT DETAILS CHRISTIANA MALL SWM FACILITY	SHEET NO. 100
				COUNTY NEW CASTLE	DESIGNED BY: CPS		TOTAL SHTS. 164
					CHECKED BY: REP		

9/9/2010 3:34:35 PM
M:\PROJECTS\2003\03059_DELTRNPK\SRMALL\CADD\3009004\PLANS\SW02_RAMPR1.DGN

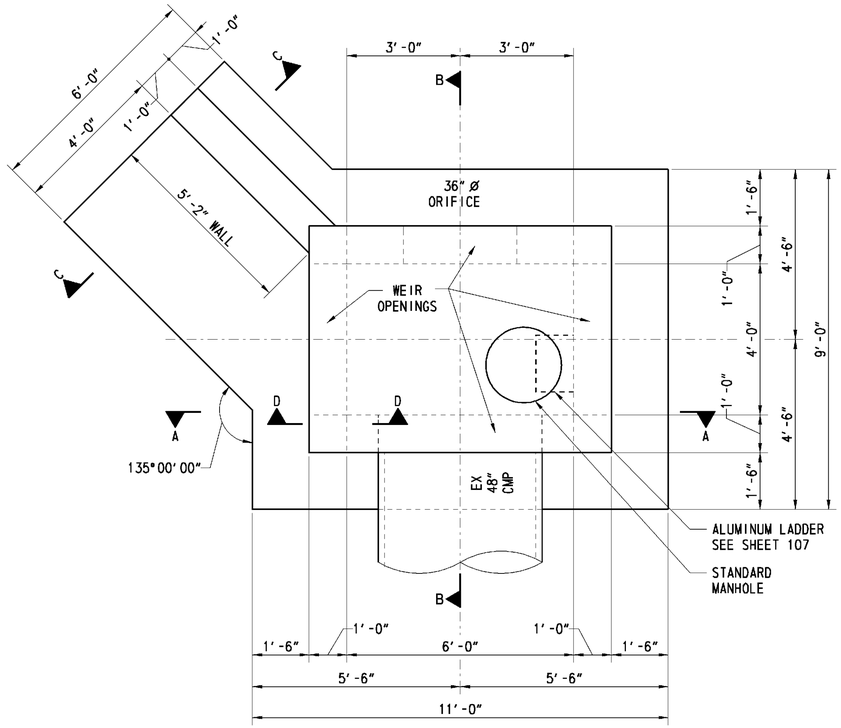

PLAN

SCALE: 1/2"=1'-0"

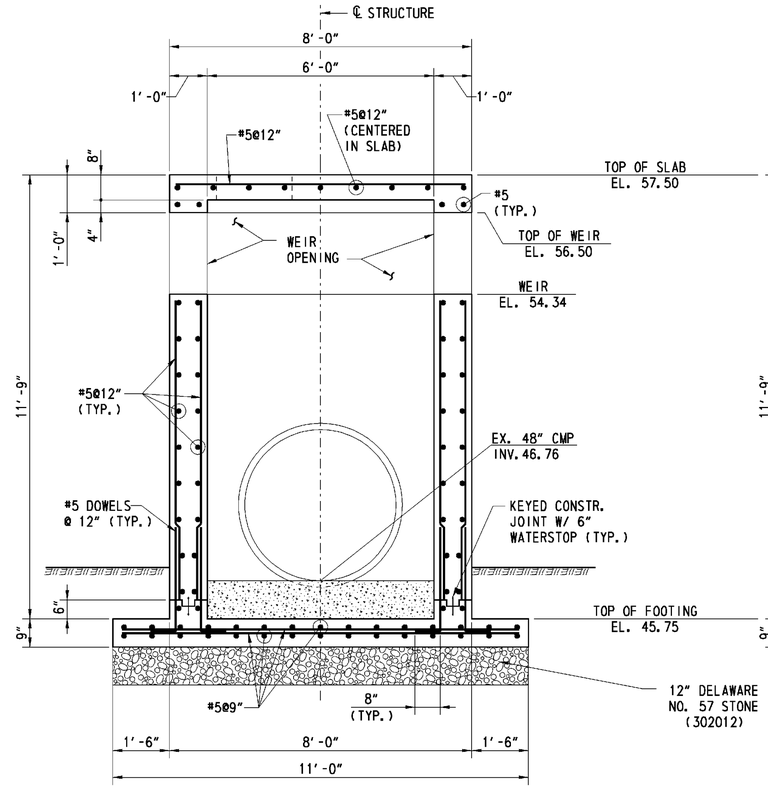

SECTION A-A

SCALE: 1/2"=1'-0"

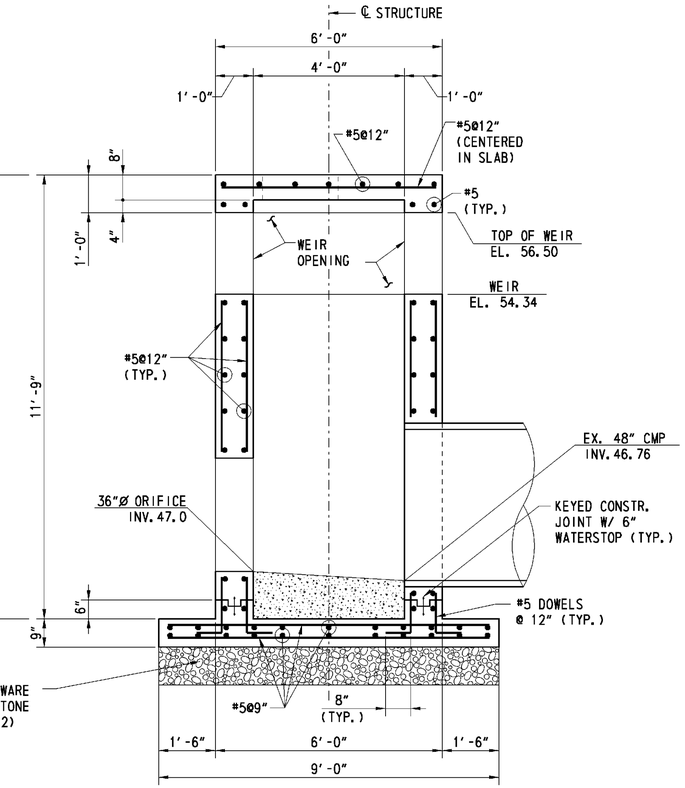

SECTION B-B

SCALE: 1/2"=1'-0"

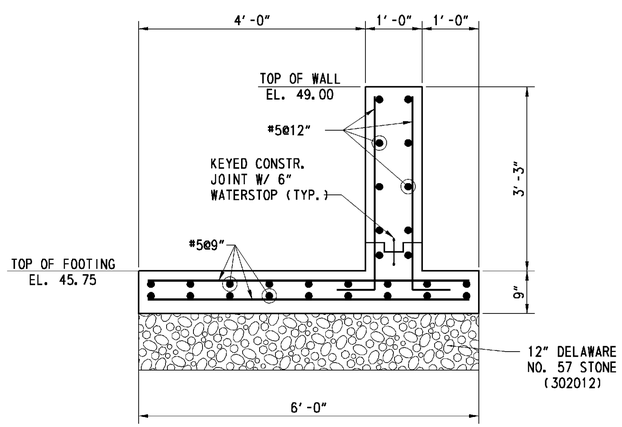

SECTION C-C

SCALE: 3/4"=1'-0"

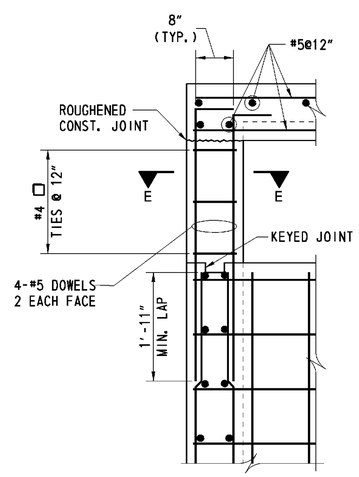

SECTION D-D

SCALE: 3/4"=1'-0"

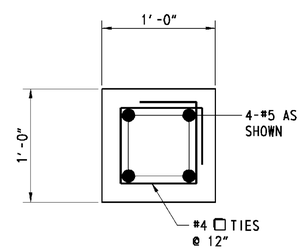

SECTION E-E

SCALE: 1 1/2"=1'-0"

CROSS REFERENCE NOTES:
1. FOR TYPICAL WALL CORNER REINFORCING DETAIL, SEE SHEET 106 OF 164.
2. FOR ADDITIONAL REINFORCING AROUND OPENINGS, SEE SHEET 106 OF 164.

SWM-1 OUTLET STRUCTURE (272000)

8/20/2010 10:47:52 AM
M:\PROJECTS\2003\03059_DELTRNPK\SRTMALL\CADD\3009004\PLANS\SW03_RAMPR1.DGN

DELAWARE DEPARTMENT OF TRANSPORTATION	ADDENDUMS / REVISIONS	SCALE AS NOTED	SR1/I-95 INTERCHANGE - CHRISTIANA MALL ROAD BRIDGE	CONTRACT T201009004	BRIDGE NO. 1-223	STORMWATER MANAGEMENT DETAILS CHRISTIANA MALL SWM FACILITY	SHEET NO. 101
				COUNTY NEW CASTLE	DESIGNED BY: CPS		TOTAL SHTS. 164
					CHECKED BY: REP		

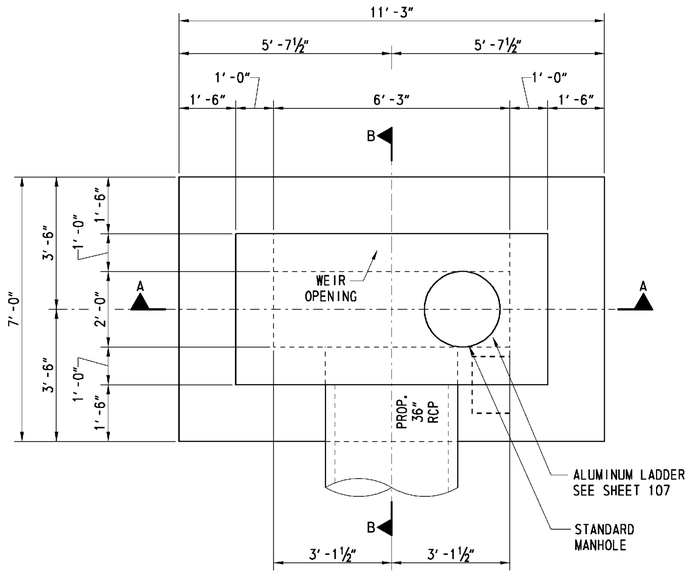

PLAN

SCALE: ½"=1'-0"

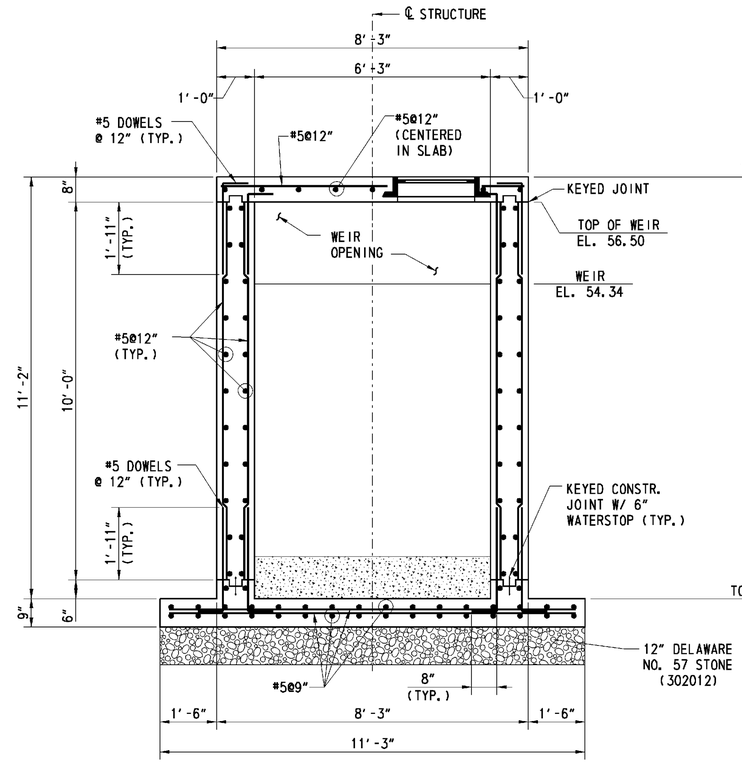

SECTION A-A

SCALE: ½"=1'-0"

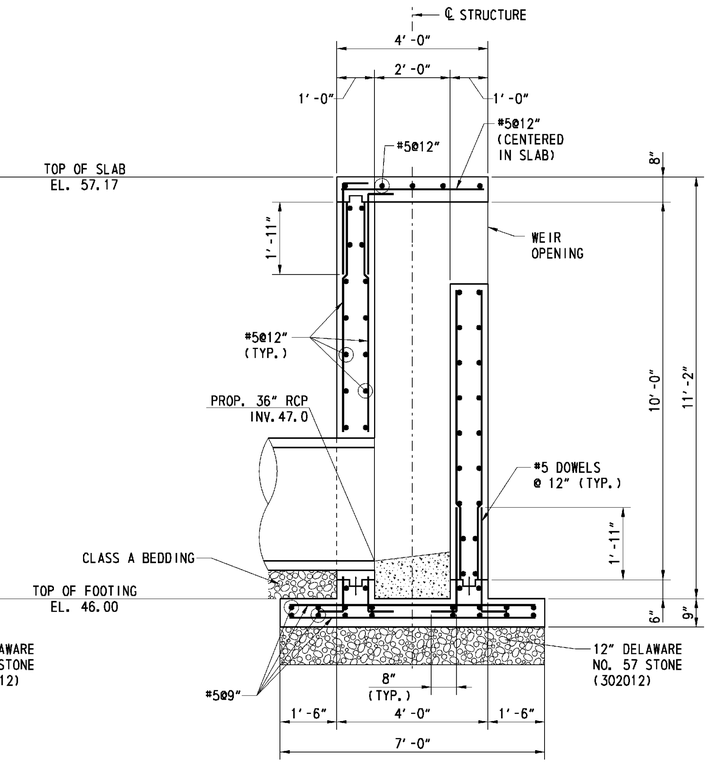

SECTION B-B

SCALE: ½"=1'-0"

SWM-3 OUTLET STRUCTURE (272001)

CROSS REFERENCE NOTES:
1. FOR TYPICAL WALL CORNER REINFORCING DETAIL, SEE SHEET 106 OF 164.
2. FOR ADDITIONAL REINFORCING AROUND OPENINGS, SEE SHEET 106 OF 164.

8/20/2010 10:50:18 AM
M:\PROJECTS\2003\03059_DELTRNPK\SR1MALL\CADD\3009004\PLANS\SW04_RAMPR1.DGN

DELAWARE DEPARTMENT OF TRANSPORTATION	ADDENDUMS / REVISIONS	SCALE AS NOTED	SR1/I-95 INTERCHANGE - CHRISTIANA MALL ROAD BRIDGE	CONTRACT T201009004	BRIDGE NO. 1-223	STORMWATER MANAGEMENT DETAILS CHRISTIANA MALL SWM FACILITY	SHEET NO. 102
				COUNTY NEW CASTLE	DESIGNED BY: CPS		TOTAL SHTS. 164
					CHECKED BY: REP		

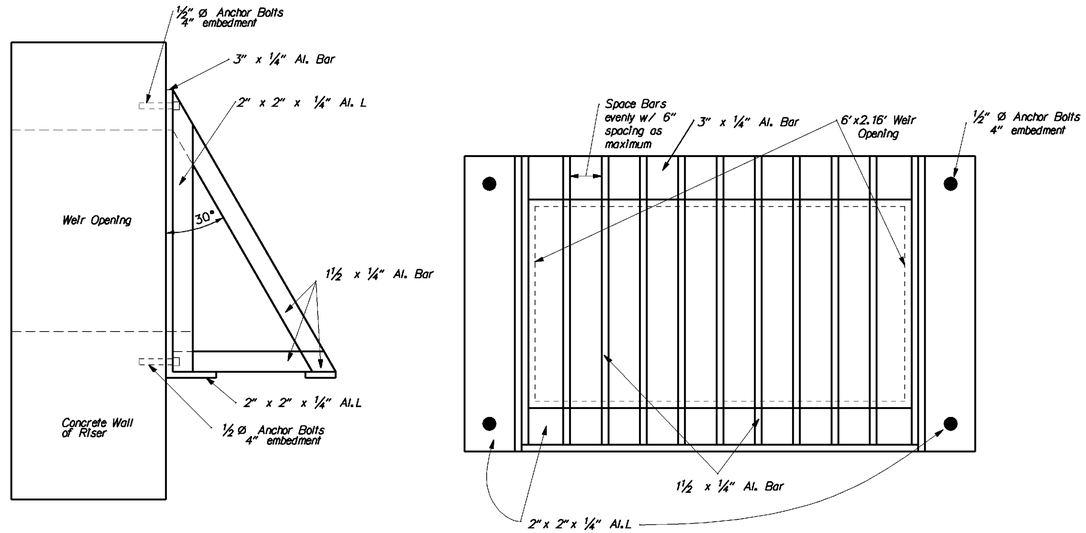

Side View

Front View

NOTES:
1. There should be no spaces larger than 6" through any opening. Therefore, additional bars may be necessary.
2. The whole structure shall be made of aluminum. The anchor bolts, nuts and washers shall be corrosion resistant.
3. ¾" diameter rods can be used in place of bars, but the above notes shall still apply.
4. The cost of the trash rack shall be included in the unit price bid for Item 272000, Pond Outlet Structure, Concrete, #1.

SWM-1 FRONT AND REAR TRASH RACK

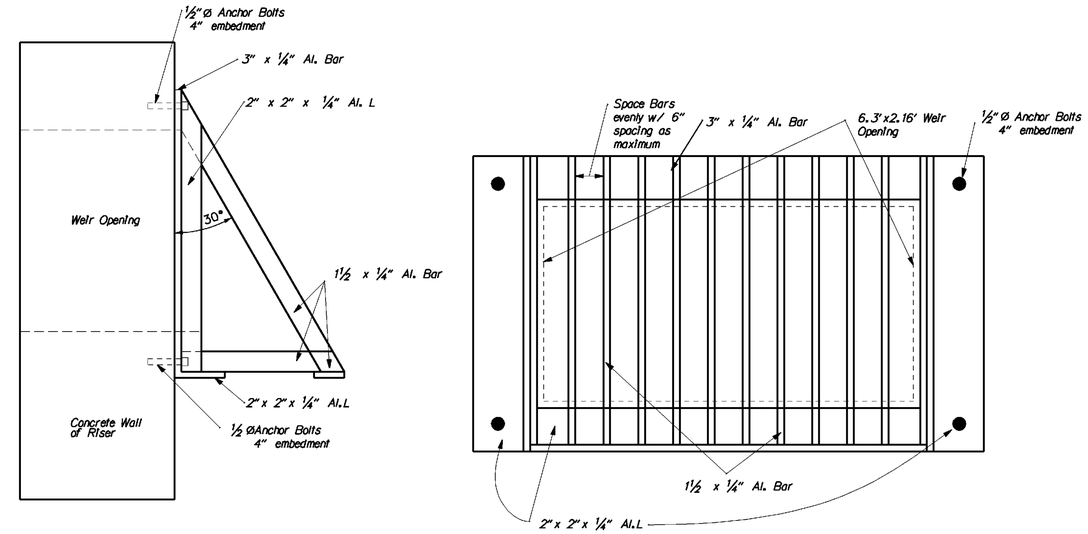

Side View

Front View

NOTES:
1. There should be no spaces larger than 6" through any opening. Therefore, additional bars may be necessary.
2. The whole structure shall be made of aluminum. The anchor bolts, nuts and washers shall be corrosion resistant.
3. ¾" diameter rods can be used in place of bars, but the above notes shall still apply.
4. The cost of the trash rack shall be included in the unit price bid for Item 272001, Pond Outlet Structure, Concrete, #2.

SWM-3 TRASH RACK

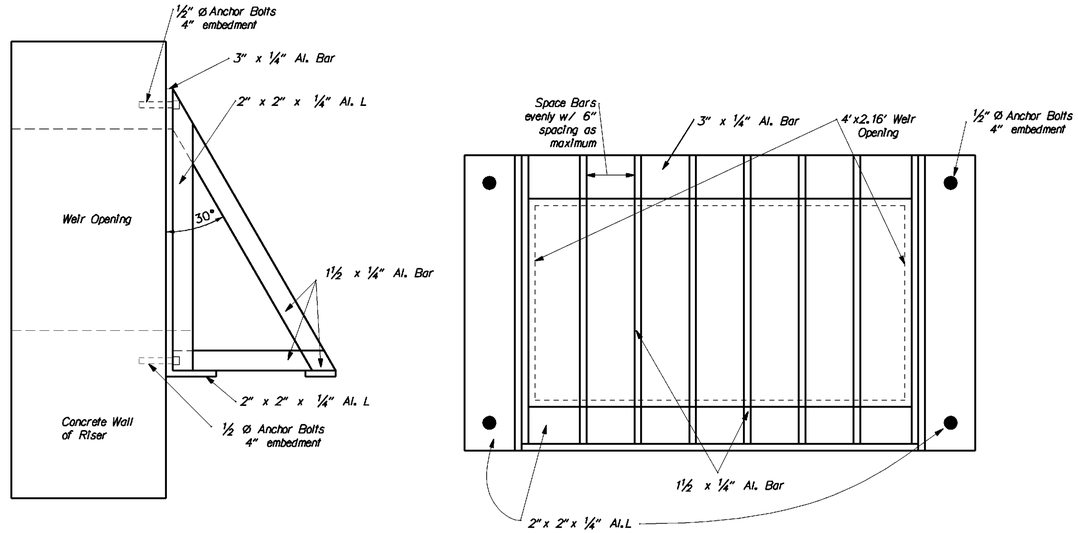

Side View

Front View

NOTES:
1. There should be no spaces larger than 6" through any opening. Therefore, additional bars may be necessary.
2. The whole structure shall be made of aluminum. The anchor bolts, nuts and washers shall be corrosion resistant.
3. ¾" diameter rods can be used in place of bars, but the above notes shall still apply.
4. The cost of the trash rack shall be included in the unit price bid for Item 272000, Pond Outlet Structure, Concrete, #1.

SWM-1 SIDE TRASH RACKS

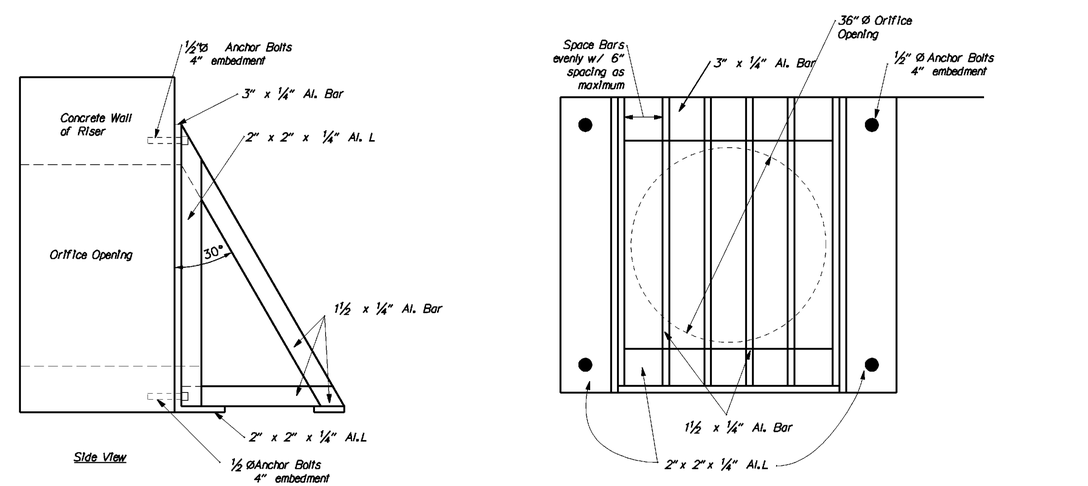

Side View

Front View

NOTES:
1. There should be no spaces larger than 6" through any opening. Therefore, additional bars may be necessary.
2. The whole structure shall be made of aluminum. The anchor bolts, nuts and washers shall be corrosion resistant.
3. ¾" diameter rods can be used in place of bars, but the above notes shall still apply.
4. The cost of the trash rack shall be included in the unit price bid for Item 272000, Pond Outlet Structure, Concrete, #1.

SWM-1 LOW FLOW ORIFICE TRASH RACKS

8/20/2010 10:53:17 AM
M:\PROJECTS\2003\03059_DELTRN\PK\SRIMALL\CADD\3009004\PLANS\SW05_RAMPR1.DGN

DELAWARE DEPARTMENT OF TRANSPORTATION	ADDENDUMS / REVISIONS	NOT TO SCALE	SR1/I-95 INTERCHANGE - CHRISTIANA MALL ROAD BRIDGE	CONTRACT T201009004	BRIDGE NO. 1-223	STORMWATER MANAGEMENT DETAILS CHRISTIANA MALL SWM FACILITY	SHEET NO. 103
				COUNTY NEW CASTLE	DESIGNED BY: CPS		TOTAL SHTS. 164
					CHECKED BY: REP		

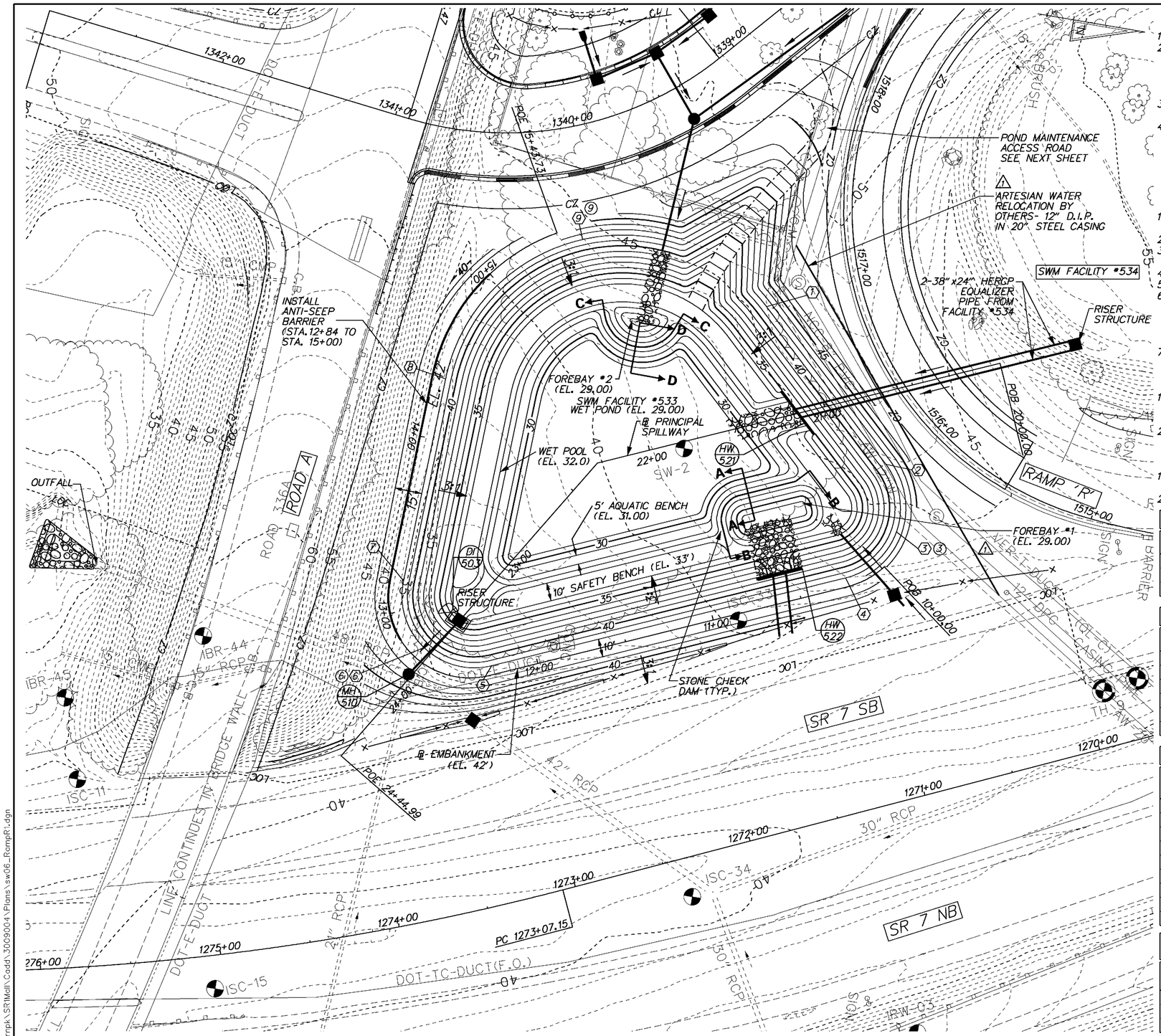

PLAN - SWM FACILITY NO. 533

GENERAL

1. THE STORMWATER MANAGEMENT POND SHALL FUNCTION AS A SEDIMENT BASIN DURING CONSTRUCTION.
2. THE POND SHALL BE CONSTRUCTED IN ACCORDANCE WITH THE FOLLOWING SECTIONS OF THE STANDARD SPECIFICATIONS:
   SECTION 271 - STORMWATER MANAGEMENT POND
   SECTION 272 - POND OUTLET STRUCTURE, CONCRETE
   SECTION 274 - CLAY BORROW, STORMWATER MANAGEMENT POND
3. UPON COMPLETION OF POND CONSTRUCTION, AS-BUILT PLANS SHALL BE SUBMITTED TO THE DELDOT STORMWATER ENGINEER.
4. POND AND FOREBAY SURFACE TREATMENT SHALL BE 6" TOPSOIL (732002) AND SOIL RETENTION BLANKET MULCH, TYPE 4 (735534) ABOVE ELEV. 32.0, AND SEEDING AS FOLLOWS:
   - TEMPORARY GRASS SEED, WET GROUND (734018) FROM POND BOTTOM TO ELEV. 32.0
   - PERMANENT GRASS SEED, WET GROUND (734015) FROM ELEV. 32.0 TO ELEV. 33.0.
   - PERMANENT GRASS SEED, DRY GROUND (734013) ABOVE ELEV. 33.0.

CONSTRUCTION SEQUENCE

1. INSTALL STABILIZED CONSTRUCTION ENTRANCE AS SHOWN ON THE CONSTRUCTION PHASING PHASE 1 SHEET. CLEAR AND GRUB FOR INSTALLATION OF PERIMETER EROSION AND SEDIMENT CONTROLS.
2. INSTALL PERIMETER SEDIMENT CONTROLS SURROUNDING THE POND CONSTRUCTION AS SHOWN ON THE
3. CONSTRUCTION PHASING PHASE 1 SHEET. CLEAR AND GRUB REMAINING AREA FOR POND CONSTRUCTION.
4. CONSTRUCT POND OUTLET STRUCTURE AND PARTIAL EMBANKMENT AS NEEDED TO INSTALL POND OUTLET
5. STRUCTURE. INSTALL SKIMMER DEWATERING DEVICE.
6. EXCAVATE POND BASIN, CONSTRUCT CLAY CORE TRENCH, INSTALL ANTI-SEEP BARRIER AND COMPLETE EMBANKMENT, OVERFLOW SPILLWAY AND BASIN TO LINES, GRADES AND DETAILS SHOWN IN THE CONSTRUCTION PLANS. DURING POND EXCAVATION, THE CONTRACTOR SHALL SALVAGE AND STOCKPILE SOILS CLASSIFIED AS SC, CL AND CH PER THE UNIFIED SOIL CLASSIFICATION SYSTEM TO BE USED FOR PIPE BACKFILL. THE CONTRACTOR SHALL OVER EXCAVATE TO EL. 28.0 FOR SEDIMENT STORAGE.
7. STABILIZE ALL BARE AREAS. DEWATER THE WORK AREA AS NEEDED.

MAINTENANCE OF POND AS A SEDIMENT BASIN

1. CONTRACTOR SHALL CLEARLY MARK THE CLEAN OUT ELEVATION ON A STAKE DRIVEN INTO THE GROUND CLEARLY VISIBLE FROM THE EMBANKMENT. SEDIMENT REMOVED FROM THE BASIN SHALL BE DISPOSED OF AT A LOCATION APPROVED BY THE ENGINEER.
2. INSPECT THE BASIN IMMEDIATELY AFTER EVERY RAIN AND MAKE REPAIRS AS NECESSARY.

CONVERSION TO PERMANENT STORMWATER MANAGEMENT POND

1. THIS FACILITY SHALL REMAIN AS A SEDIMENT BASIN FOR USE DURING CONSTRUCTION OF CONTRACT T200809003.
2. FOR CONVERSION TO PERMANENT STORMWATER MANAGEMENT POND SEE CONTRACT T200809003.

BASELINE PRINCIPAL SPILLWAY

STATION	NORTHING	EASTING
POB 20+00.00	610,119.7	432,585.3
PI 22+29.78	609,909.2	432,677.5
POE 24+44.99	609,797.0	462,861.1

BASELINE POND EMBANKMENT

STATION / RADIUS	NORTHING	EASTING
POB 10+00 / 45.0'	610,075.5	432,707.1
PT 10+23.27	610,057.5	432,721.4
PC 12+27.76 / 45.0'	609,870.2	432,803.5
PT 13+18.61	609,807.1	432,760.7
PC 14+33.99 / 107.39'	609,811.2	462,645.4
POE 15+43.73	609,865.8	432,555.6

POND FACILITY BASELINE STAKEOUT

@ SWM NO. 533 STA. / OFFSET	NORTHING	EASTING	CURVE NO.	RADIUS
1 21+17.95, 61.59 RT.	609,986.9	432,576.2		
2 20+74.84, 39.00 LT.	610,066.8	432,651.0		
3 20+78.21, 76.78 LT.	610,078.8	432,687.0	3	40'
4 21+11.60, 94.76 LT.	610,055.5	432,716.8	6	40'
5 23+52.61, 29.83 LT.	609,870.6	432,797.8	9	100'
6 23+69.67, 4.89 RT.	609,832.1	432,794.3		
7 23+49.36, 37.82 RT.	609,814.6	432,759.8		
8 22+49.85, 93.91 RT.	609,818.6	432,645.6		
9 22+07.70, 122.17 RT.	609,880.4	432,556.7		

POND FACILITY DESIGN SUMMARY

DESIGN STORM	FACILITY INFLOW	FACILITY DISCHARGE	WATER SURFACE EL.	STORAGE VOLUME
2-YEAR	84.07 CFS	29.48 CFS	35.59 FT.	2.185 AC.-FT.
10-YEAR	133.59 CFS	78.53 CFS	37.13 FT.	3.325 AC.-FT.
100-YEAR	256.97 CFS	121.41 CFS	40.81 FT.	6.706 AC.-FT.

STORMWATER MANAGEMENT WET POND SHALL PROVIDE QUALITY MANAGEMENT OF THE FIRST ONE INCH OF RUNOFF. THE POND SHALL ALSO PROVIDE QUANTITY MANAGEMENT FOR THE 2, 10, AND 100 YEAR STORMS.

HAZARD CLASSIFICATION: CLASS A AS PER POND 378 CODE

DRAINAGE AREA TO FACILITIES #533 & 534: 85.79 ACRES

SEDIMENT CLEANOUT:
WHEN THE POND IS FUNCTIONING AS A SEDIMENT BASIN, CLEANOUT SHALL OCCUR WHEN SEDIMENT HAS FILLED UP TO ELEVATION 31.00.

BORING ISC-33
N610001, E432750

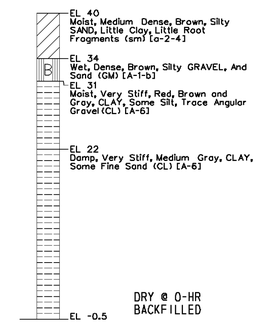

DRY @ 0-HR
BACKFILLED

BORING SW-02
N609955.3, E432661.3

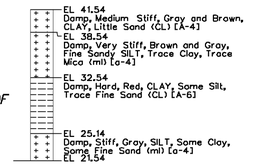

DELAWARE DEPARTMENT OF TRANSPORTATION

ADDENDUMS / REVISIONS
ADDENDUM NO. 1, ADDED ARTESIAN RELOCATION BY OTHERS, 11/22/10 CDW

SCALE 0 30 60 90 FEET

SR1/I-95 INTERCHANGE - CHRISTIANA MALL ROAD BRIDGE

CONTRACT	BRIDGE NO.	1-223
T201009004	DESIGNED BY:	MK
COUNTY		
NEW CASTLE	CHECKED BY:	REP

STORMWATER MANAGEMENT DETAILS DelDOT SWM FACILITY #533

SHEET NO. 104
TOTAL SHTS. 164

11/22/2010 11:42:32 AM
M:\projects\2003\03059_deltrnpk\SR1Mall\Cadd\3009004\Plans\sw06_RampR1.dgn

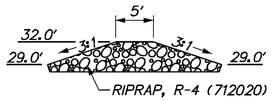

SECTION A-A
N. T. S.

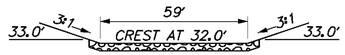

SECTION B-B
N. T. S.

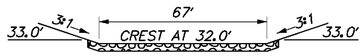

SECTION C-C
N. T. S.

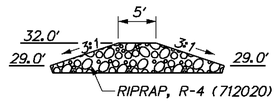

SECTION D-D
N. T. S.

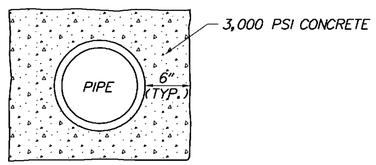

CONCRETE ENCASEMENT DETAIL
N. T. S.

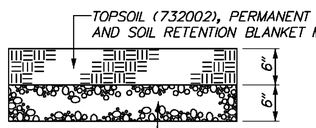

POND MAINTENANCE ACCESS ROAD (TYP.)
N. T. S.

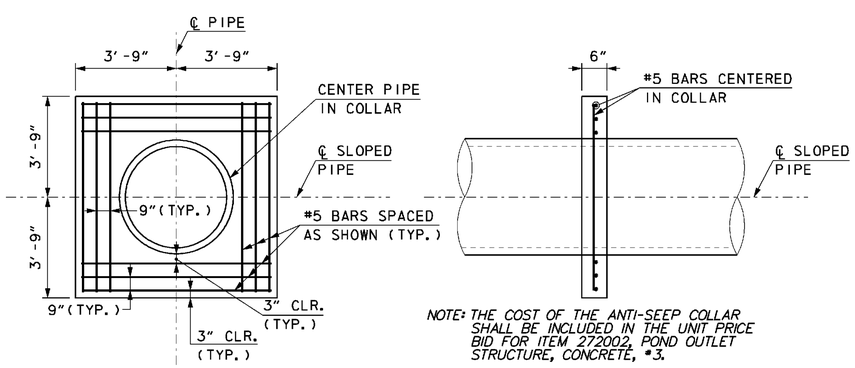

NOTE: THE COST OF THE ANTI-SEEP COLLAR SHALL BE INCLUDED IN THE UNIT PRICE BID FOR ITEM 272002, POND OUTLET STRUCTURE, CONCRETE, *3.

ANTI-SEEP COLLAR DETAIL
N. T. S.

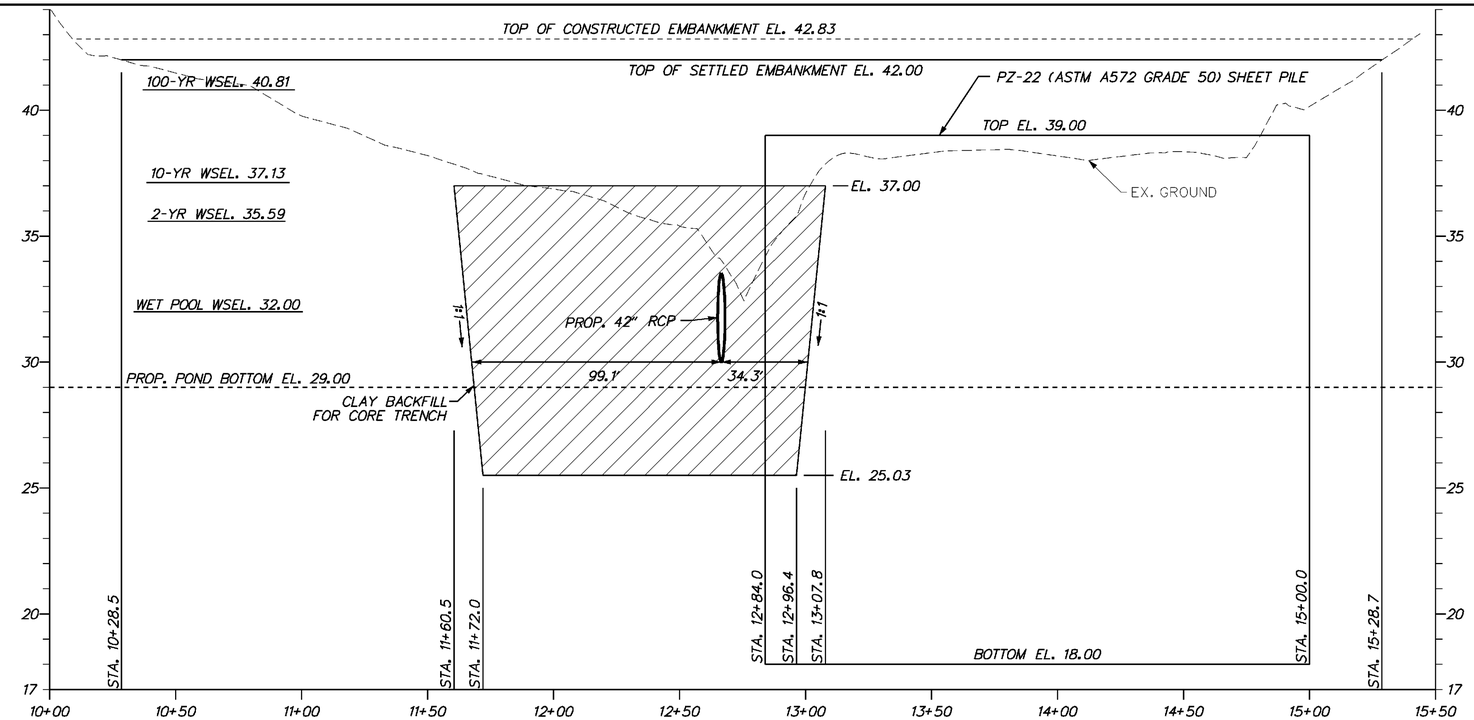

EMBANKMENT PROFILE FOR SWM FACILITY NO. 533

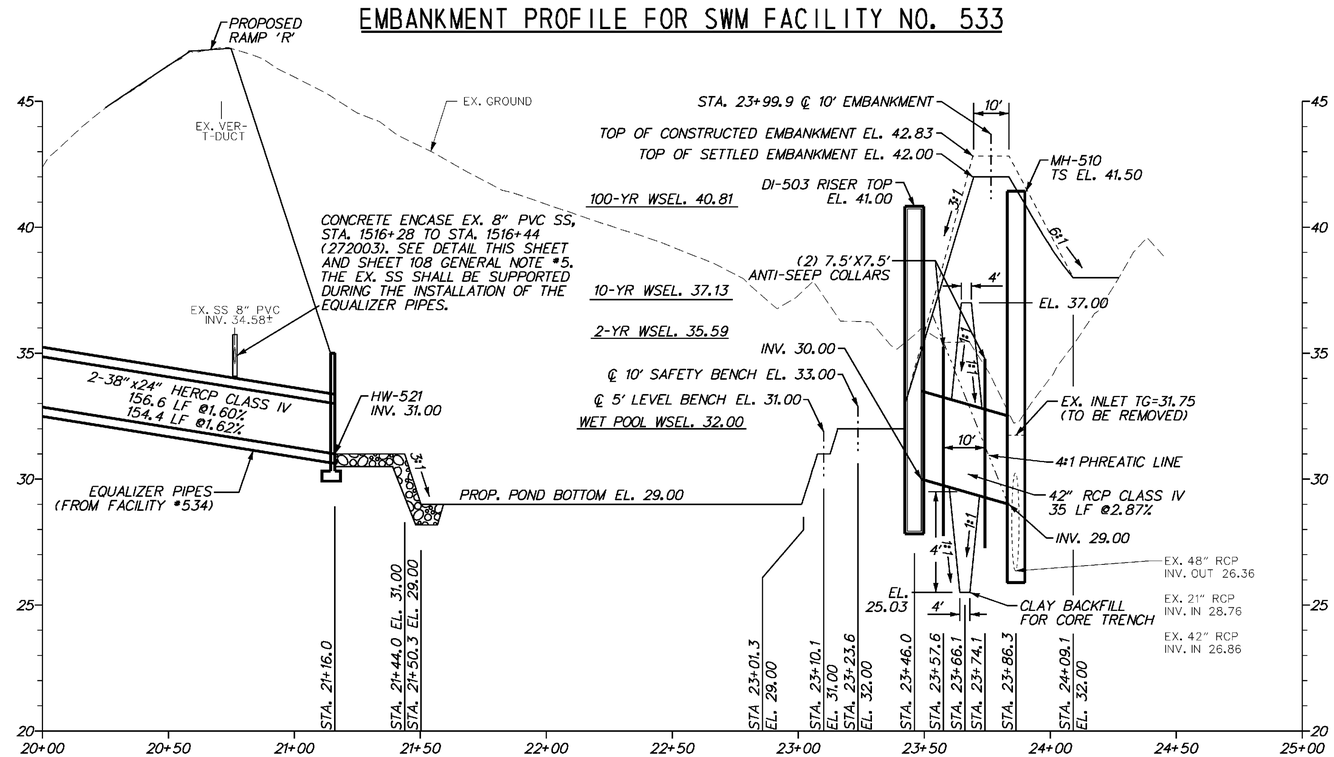

SPILLWAY PROFILE FOR SWM FACILITY NO. 533

9/15/2010 4:48:02 PM
M:\PROJECTS\2003\03059_DELTRNPK\SRIMALL\CADD\3009004\PLANS\SW07_RAMPR1.DGN

DELAWARE DEPARTMENT OF TRANSPORTATION	ADDENDUMS / REVISIONS	0 30 60 HORIZ: 1"=30' 0 3 6 VERT: 1"=3'	SR1/I-95 INTERCHANGE - CHRISTIANA MALL ROAD BRIDGE	CONTRACT T201009004	BRIDGE NO. 1-223	STORMWATER MANAGEMENT DETAILS DelDOT SWM FACILITY #533	SHEET NO. 105
				COUNTY NEW CASTLE	DESIGNED BY: MK		TOTAL SHTS. 164
					CHECKED BY: REP		

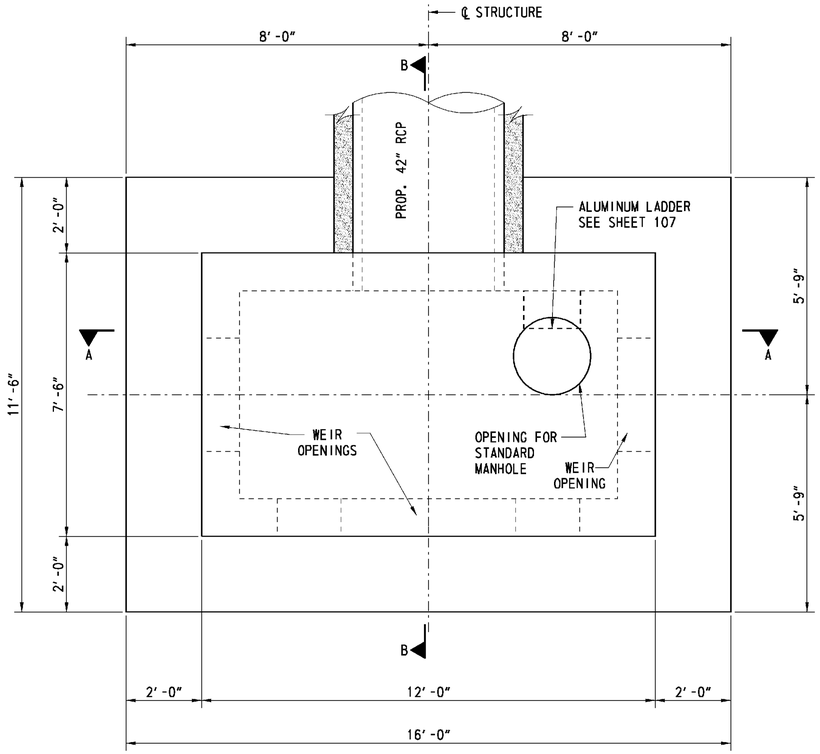

SWM FACILITY NO. 533 OUTLET STRUCTURE (272002)
PLAN

SCALE: ½″=1′-0″

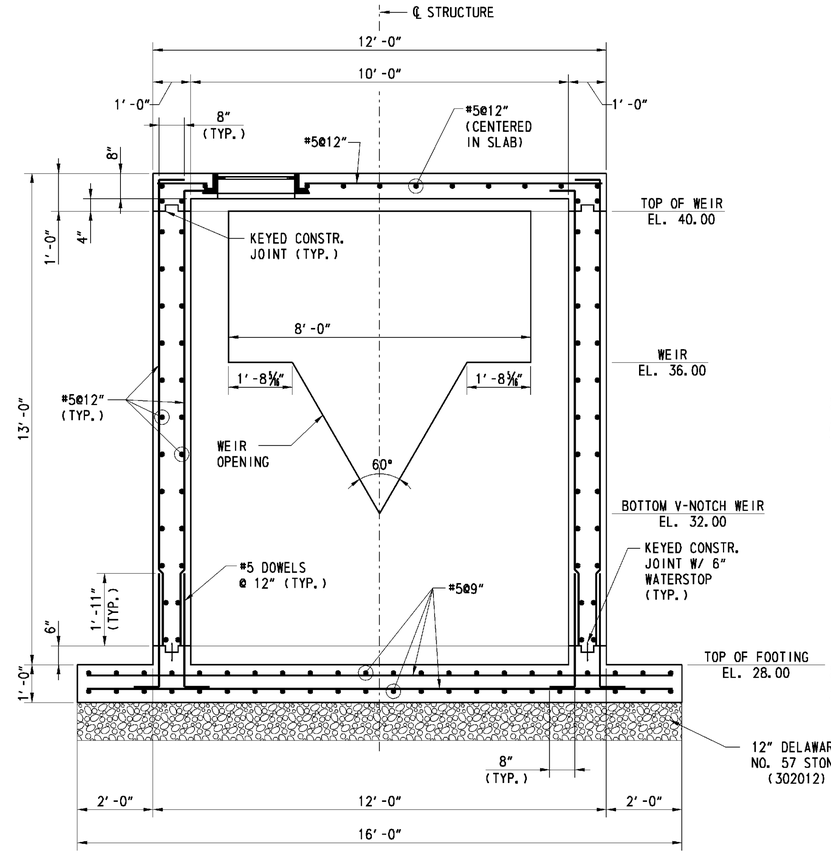

SWM FACILITY NO. 533 OUTLET STRUCTURE
SECTION A-A (272002)

SCALE: ½″=1′-0″

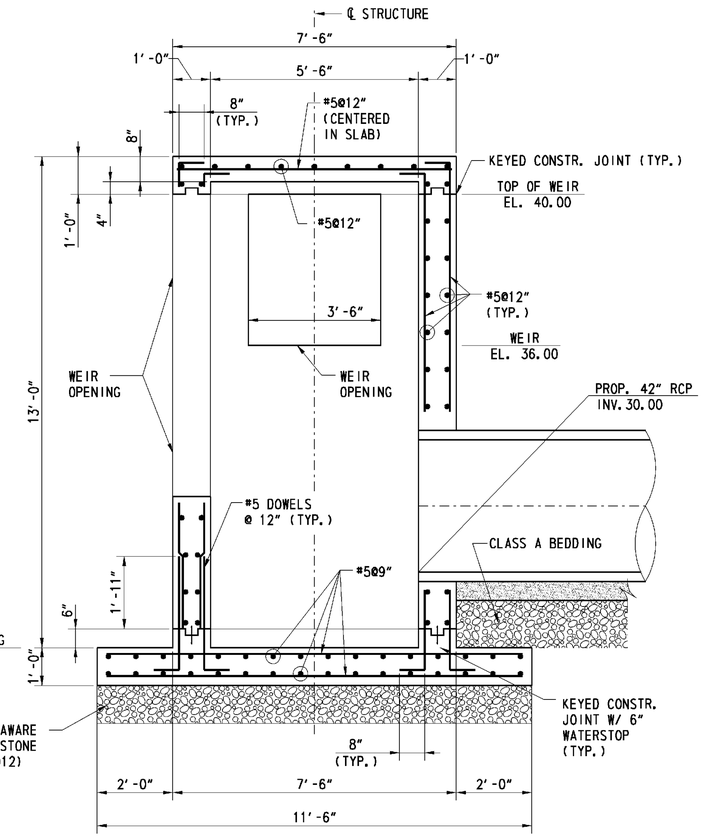

SWM FACILITY NO. 533 OUTLET STRUCTURE
SECTION B-B (272002)

SCALE: ½″=1′-0″

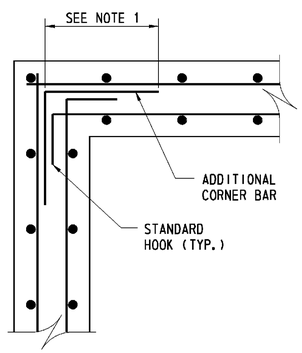

NOTES:
1. UNLESS OTHERWISE NOTED ON THE DRAWING PROVIDE MINIMUM LAP AS REQUIRED. IF BAR SIZES DIFFER, USE THE MIN. LAP LENGTH AS REQUIRED FOR THE SMALLER OF THE TWO BARS BEING SPLICED.
2. UNLESS OTHERWISE NOTED ON THE DRAWING, THE ADDITIONAL BARS SHALL BE THE SAME SIZE AND AT THE SAME SPACING AS THE HORIZONTAL BARS.

CORNER REINFORCING DETAIL

SCALE: 1″=1′-0″

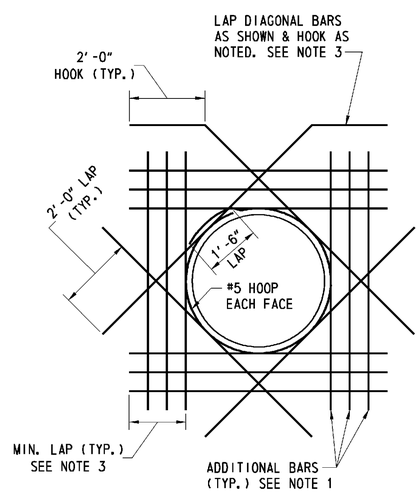

NOTES:
1. NUMBER OF ADDITIONAL REINFORCING BARS AT EACH SIDE OF OPENING SHALL EQUAL HALF THE NUMBER OF INTERRUPTED BARS IN EACH LAYER OF REINFORCING.
2. SIZE OF ADDITIONAL REINFORCING BARS TO EQUAL SIZE OF INTERRUPTED REINFORCING BARS.
3. PROVIDE STANDARD HOOK BARS IF LAP LENGTH EXTENSION CANNOT BE OBTAINED AT JOINTS OR OTHER OBSTRUCTIONS. PLACE ADDITIONAL BARS IN SAME PLANES AS INTERRUPTED REINFORCING.
4. SIZE OF DIAGONAL BARS SHALL BE THE SIZE OF THE LARGEST NORMAL REINFORCING BAR CUT, UNLESS OTHERWISE NOTED. LOCATE DIAGONALS IN EACH LAYER OF REINFORCING.
5. PLACE DIAGONAL BARS INSIDE NORMAL REINFORCING.
6. ALL REINFORCING TO CLEAR OPENING OR FLANGE COLLARS BY 2″.
7. ADDITIONAL REINFORCING BARS ARE REQUIRED AT ALL LOCATIONS WHERE THE REINFORCING IS INTERRUPTED BY AN OPENING.

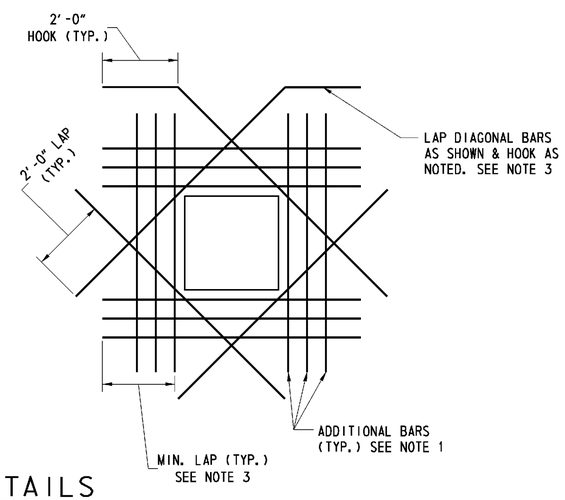

ADDITIONAL REINFORCING BAR DETAILS

NOT TO SCALE

DELAWARE DEPARTMENT OF TRANSPORTATION	ADDENDUMS / REVISIONS	SCALE AS NOTED	SR1/I-95 INTERCHANGE – CHRISTIANA MALL ROAD BRIDGE	CONTRACT T201009004	BRIDGE NO. 1-223	STORMWATER MANAGEMENT DETAILS DelDOT SWM FACILITY #533	SHEET NO. 106
				COUNTY NEW CASTLE	DESIGNED BY: MK		TOTAL SHTS. 164
					CHECKED BY: REP		

9/8/2010 4:09:11 PM
M:\PROJECTS\2003\03059_DELTRNPK\SRIMALL\CADD\3009004\PLANS\SW08_RAMPR1.DGN

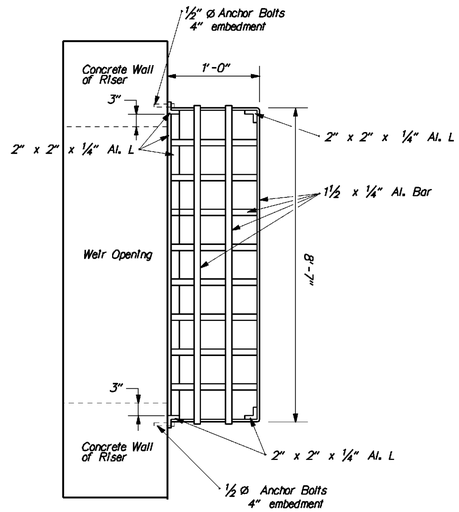

Side View

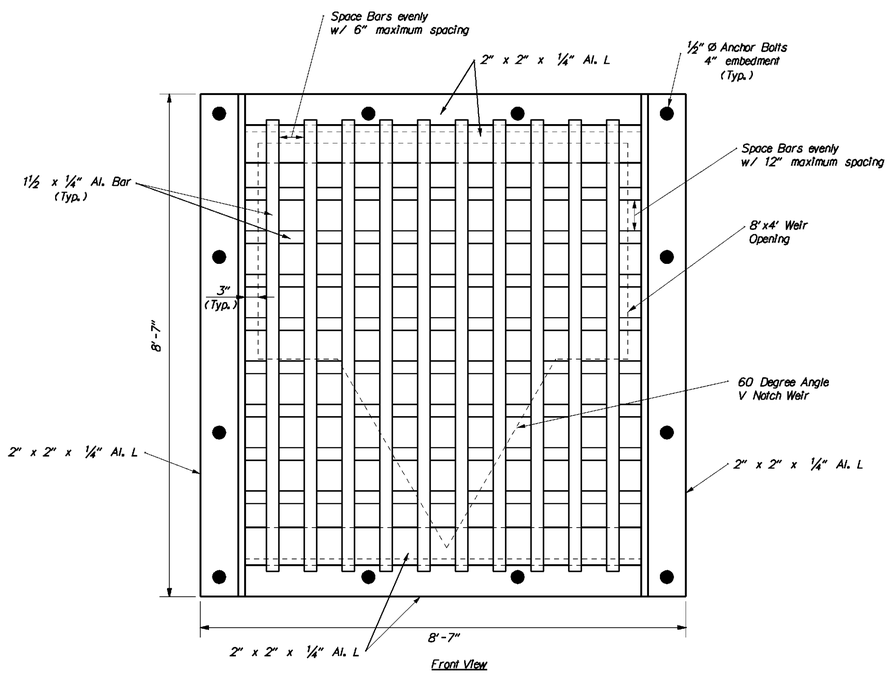

Front View

NOTES:
1. There should be no spaces larger than 6" through any opening. Therefore, additional bars may be necessary.
2. The whole structure shall be made of aluminum. The anchor bolts, nuts and washers shall be corrosion resistant.
3. 3/4" diameter rods can be used in place of bars, but the above notes shall still apply.
4. The cost of the trash rack shall be included in the unit price bid for item 272002, Pond Outlet Structure, Concrete, #3.

BMP 533: RISER FRONT TRASH RACK

NOTES:
The cost of the ladder shall be included in the unit price bid for the items Pond Outlet Structure, Concrete (272000, 272001, 272002, 272003)

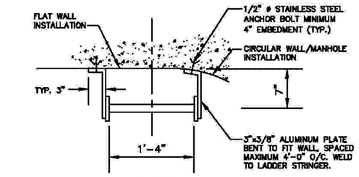

PLAN

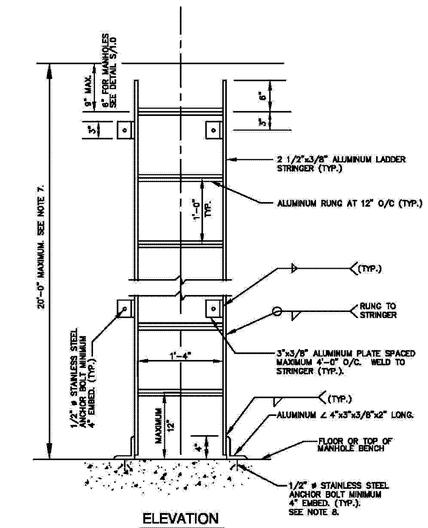

ELEVATION

ALUMINUM RUNG DETAIL

RUNG SHALL BE FREE OF SHARP EDGES.

NOTES

1. RUNG SHALL BE SOLID.
2. WHERE ALUMINUM CONTACTS CONCRETE, COAT ALUMINUM WITH AN EPOXY COATING SYSTEM.
3. ACCESS OPENING SHALL BE MINIMUM 30" SQUARE OR 30" DIAMETER FRAME AND COVER.
4. RUNG SHALL BEAR ON STRINGER 3/16" MINIMUM.
5. ALL WELDS SHALL BE MINIMUM 3/16" WIDE.
6. KEEP LADDER FREE OF OBSTACLES THAT WILL INTERFERE WITH THE PLACEMENT OF FEET OR HANDS.
7. FOR DEPTH OVER 20' PROVIDE FALL PREVENTION SYSTEM.
8. FOR SEWER MANHOLES SET ANCHOR BOLTS MIN 6" FROM EDGE OF CHANNEL.

ALUMINUM LADDER DETAIL

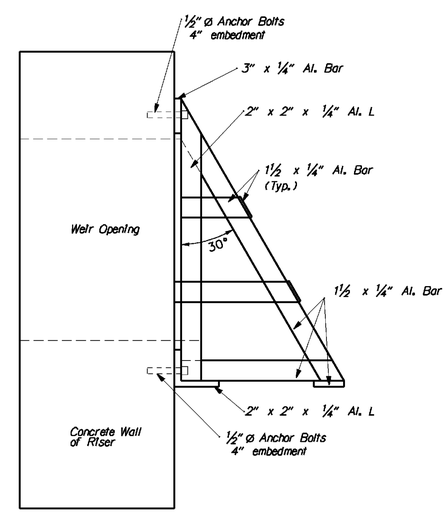

Side View

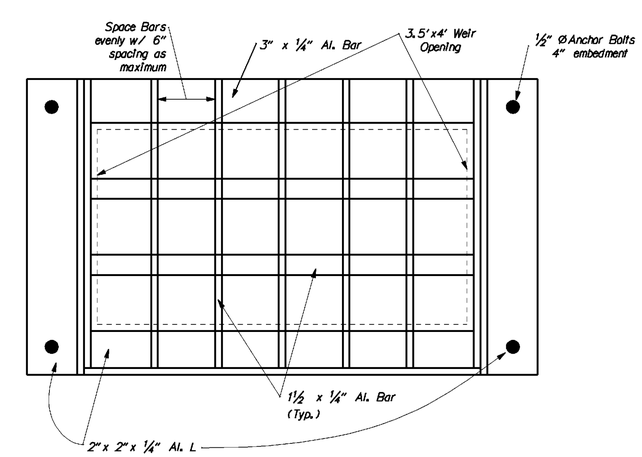

Front View

NOTES:
1. There should be no spaces larger than 6" through any opening. Therefore, additional bars may be necessary.
2. The whole structure shall be made of aluminum. The anchor bolts, nuts and washers shall be corrosion resistant.
3. 3/4" diameter rods can be used in place of bars, but the above notes shall still apply.
4. The cost of the trash rack shall be included in the unit price bid for item 272002, Pond Outlet Structure, Concrete, #3.

BMP 533 AND BMP 534: RISER SIDE TRASH RACKS

8/20/2010 11:08:25 AM
M:\PROJECTS\2003\03059_DELTRNPK\SRIMALL\CADD\3009004\PLANS\SW09_RAMPR1.DGN

DELAWARE DEPARTMENT OF TRANSPORTATION	ADDENDUMS / REVISIONS	NOT TO SCALE	SR1/I-95 INTERCHANGE - CHRISTIANA MALL ROAD BRIDGE	CONTRACT T201009004	BRIDGE NO. 1-223	STORMWATER MANAGEMENT DETAILS DelDOT SWM FACILITY #533	SHEET NO. 107
				COUNTY NEW CASTLE	DESIGNED BY: MK		TOTAL SHTS. 164
					CHECKED BY: REP		

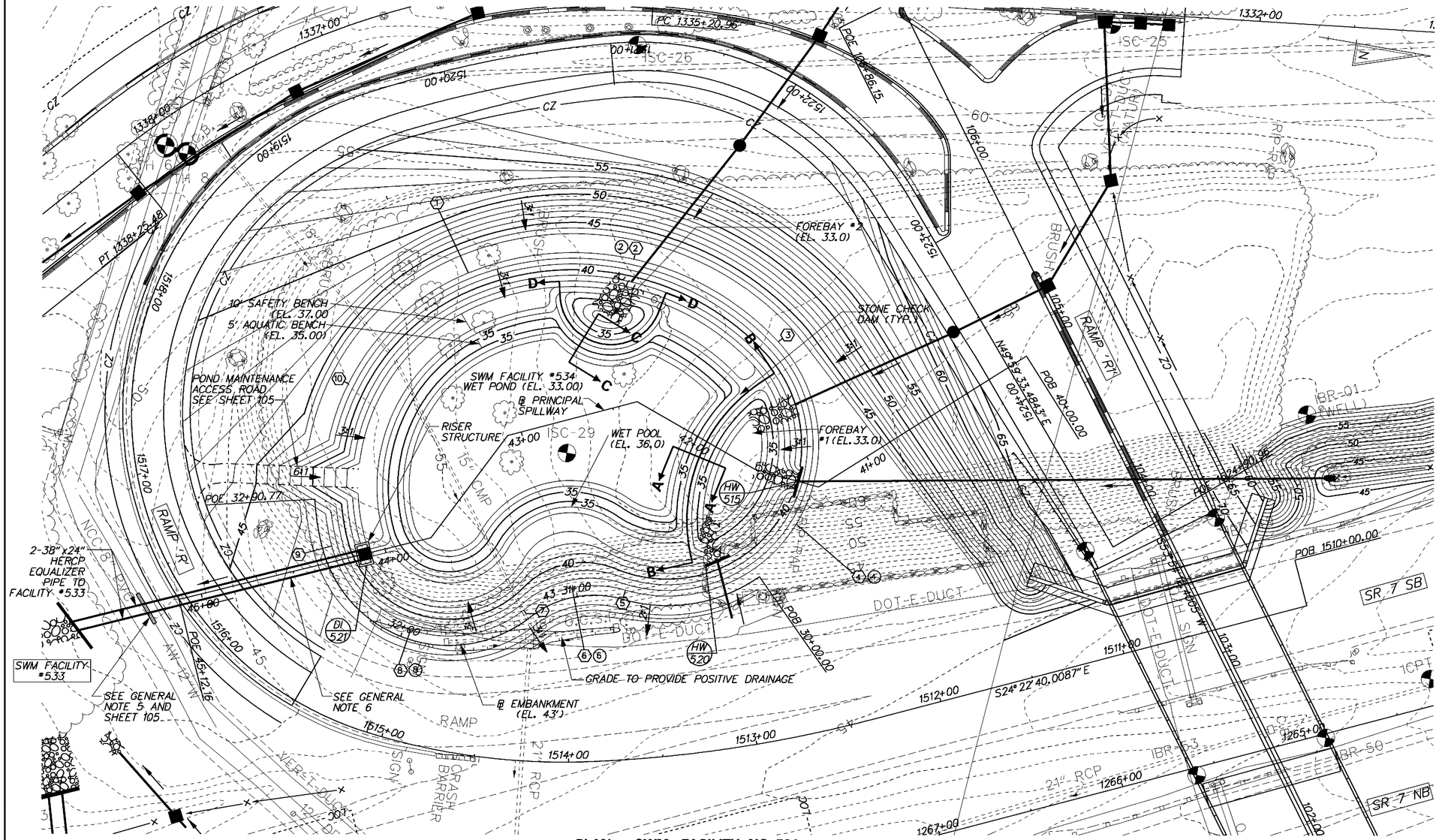

PLAN – SWM FACILITY NO. 534

BASELINE PRINCIPAL SPILLWAY		
STATION	NORTHING	EASTING
POB 40+00.00	610,485.8	432,405.7
PI 41+30.14	610,389.0	432,492.7
PI 41+64.90	610,354.4	432,489.1
PI 42+36.73	610,287.0	432,464.4
PI 43+07.50	610,222.5	432,493.6
PI 43+75.16	610,191.6	432,553.8
POE 45+12.16	610,065.9	432,608.2

BASELINE POND EMBANKMENT		
STATION / RADIUS	NORTHING	EASTING
POB 30+00 / 85.0'	610,366.4	432,544.6
PRC 30+75.74/ 55.0'	610,297.2	432,568.6
PRC 31+27.91 / 69.0'	610,250.2	432,586.4
PCC 32+64.43 / 127.0'	610,136.2	432,568.9
POE 32+90.77	610,127.8	432,544.0

POND FACILITY BASELINE STAKEOUT					
	@ SWM NO. 534 STA. / OFFSET	NORTHING	EASTING	CURVE NO.	RADIUS
1	43+05.83, 88.46 RT.	610,187.5	432,412.3	2	148'
2	-	610,272.6	432,390.4	4	80'
3	41+87.82, 64.62 RT.	610,355.1	432,420.5	6	60'
4	41+36.05, 21.98 LT.	610,380.9	432,513.9	8	64'
5	41+92.51, 89.51 LT.	610,297.7	432,563.6	10	122'
6	43+51.35, 75.64 LT.	610,269.8	432,567.2		
7	42+33.93, 125.39 LT.	610,246.5	432,583.1		
8	43+97.08, 44.68 LT.	610,189.3	432,603.5		
9	44+27.00, 8.21 RT.	610,140.9	432,566.8		
10	43+36.12, 83.78 RT.	610,134.9	432,480.7		

BORING ISC-29
N610255.0231, E432497.3362

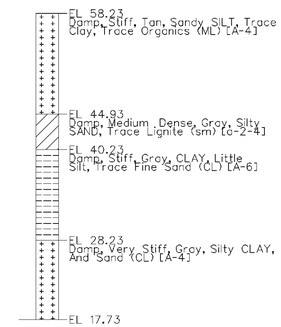

POND FACILITY DESIGN SUMMARY				
DESIGN STORM	FACILITY INFLOW	FACILITY DISCHARGE	WATER SURFACE EL.	STORAGE VOLUME
2-YEAR	65.98 CFS	22.07 CFS	38.25 FT.	1.318 AC.-FT.
10-YEAR	111.11 CFS	41.54 CFS	39.51 FT.	2.244 AC.-FT.
100-YEAR	200.56 CFS	87.47 CFS	41.51 FT.	3.876 AC.-FT.

STORMWATER MANAGEMENT WET POND SHALL PROVIDE QUALITY MANAGEMENT OF THE FIRST ONE INCH OF RUNOFF. THE POND SHALL ALSO PROVIDE QUANTITY MANAGEMENT FOR THE 2, 10, AND 100 YEAR STORMS.

HAZARD CLASSIFICATION: CLASS A AS PER POND 378 CODE

DRAINAGE AREA TO FACILITIES #533 & 534: 85.79 ACRES

SEDIMENT CLEANOUT:

WHEN POND IS FUNCTIONING AS A SEDIMENT BASIN, CLEANOUT SHALL OCCUR WHEN SEDIMENT HAS FILLED UP TO ELEVATION 34.50.

GENERAL

1. THE STORMWATER MANAGEMENT POND SHALL FUNCTION AS A SEDIMENT BASIN DURING CONSTRUCTION.
2. THE POND SHALL BE CONSTRUCTED IN ACCORDANCE WITH THE FOLLOWING SECTIONS OF THE STANDARD SPECIFICATIONS:
   SECTION 271 - STORMWATER MANAGEMENT POND
   SECTION 272 - POND OUTLET STRUCTURE, CONCRETE
   SECTION 274 - CLAY BORROW, STORMWATER MANAGEMENT POND
3. UPON COMPLETION OF POND CONSTRUCTION, AS-BUILT PLANS SHALL BE SUBMITTED TO THE DELDOT STORMWATER ENGINEER.
4. POND AND FOREBAY SURFACE TREATMENT SHALL BE 6" TOPSOIL (732002) AND SOIL RETENTION BLANKET MULCH, TYPE 4 (735534) ABOVE EL. 36.0, AND SEEDING AS FOLLOWS:
   - TEMPORARY GRASS SEED, WET GROUND (734018) FROM POND BOTTOM TO EL. 36.0
   - PERMANENT GRASS SEED, WET GROUND (734015) FROM EL. 36.0 TO EL. 37.0.
   - PERMANENT GRASS SEED, DRY GROUND (734013) ABOVE EL. 37.0.
5. SUPPORT AND CONCRETE ENCASEMENT OF EX. 8" PVC SANITARY SEWER SHALL BE INCLUDED IN THE UNIT PRICE BID FOR ITEM 272003, POND OUTLET STRUCTURE, CONCRETE, #4.
6. ALL COSTS ASSOCIATED WITH THE DELDOT APPROVED METHOD OF BORING OR TUNNELING THE EQUALIZER PIPES UNDER EXISTING RAMP R, INCLUDING, BUT NOT LIMITED TO, JACKING PITS, HERC PIPES, CASING PIPES, TUNNELING SHIELDS, ETC., SHALL BE INCLUDED IN THE UNIT PRICE BID FOR ITEM 272003, POND OUTLET STRUCTURE, CONCRETE, #4.

CONSTRUCTION SEQUENCE

1. INSTALL STABILIZED CONSTRUCTION ENTRANCE AS SHOWN ON THE CONSTRUCTION PHASING PHASE 1 SHEET.
2. CLEAR AND GRUB FOR INSTALLATION OF PERIMETER EROSION AND SEDIMENT CONTROLS.
3. INSTALL PERIMETER SEDIMENT CONTROLS SURROUNDING THE POND CONSTRUCTION AS SHOWN ON THE CONSTRUCTION PHASING PHASE 1 SHEET.
4. CLEAR AND GRUB REMAINING AREA FOR POND CONSTRUCTION.
5. CONSTRUCT POND OUTLET STRUCTURE, RIPRAP ENERGY DISSIPATOR AND PARTIAL EMBANKMENT AS NEEDED TO INSTALL POND OUTLET STRUCTURE. INSTALL SKIMMER DEWATERING DEVICE.
6. EXCAVATE POND BASIN AND COMPLETE EMBANKMENT, OVERFLOW SPILLWAY AND BASIN TO LINES, GRADES AND DETAILS SHOWN IN THE CONSTRUCTION PLANS. DURING POND EXCAVATION, THE CONTRACTOR SHALL SALVAGE AND STOCKPILE SOILS CLASSIFIED AS SC, CL AND CH PER THE UNIFIED SOIL CLASSIFICATION SYSTEM TO BE USED FOR PIPE BACKFILL. THE CONTRACTOR SHALL OVER EXCAVATE TO EL. 32.0 FOR SEDIMENT STORAGE.
7. STABILIZE ALL BARE AREAS. DEWATER THE WORK AREA AS NEEDED.

MAINTENANCE OF POND AS A SEDIMENT BASIN

1. CONTRACTOR SHALL CLEARLY MARK THE CLEAN OUT ELEVATION ON A STAKE DRIVEN INTO THE GROUND AT A LOCATION CLEARLY VISIBLE FROM THE EMBANKMENT. SEDIMENT REMOVED FROM THE BASIN SHALL BE DISPOSED OF AT A LOCATION APPROVED BY THE ENGINEER.
2. INSPECT THE BASIN IMMEDIATELY AFTER EVERY RAIN AND MAKE REPAIRS AS NECESSARY.

CONVERSION TO PERMANENT STORMWATER MANAGEMENT POND

1. THIS FACILITY SHALL REMAIN AS A SEDIMENT BASIN FOR USE DURING CONSTRUCTION OF CONTRACT T200809003.
2. FOR CONVERSION TO PERMANENT STORMWATER MANAGEMENT POND SEE CONTRACT T200809003.

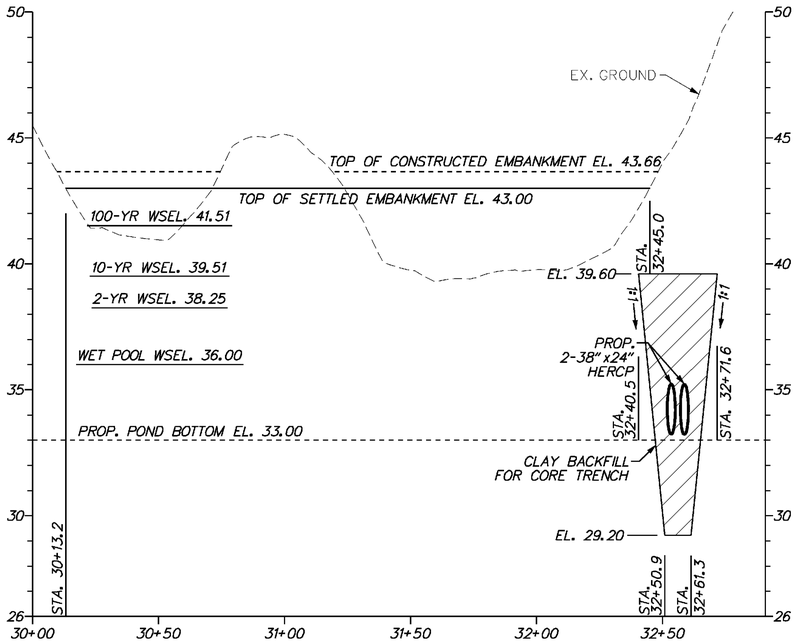

EMBANKMENT PROFILE FOR SWM FACILITY NO. 534

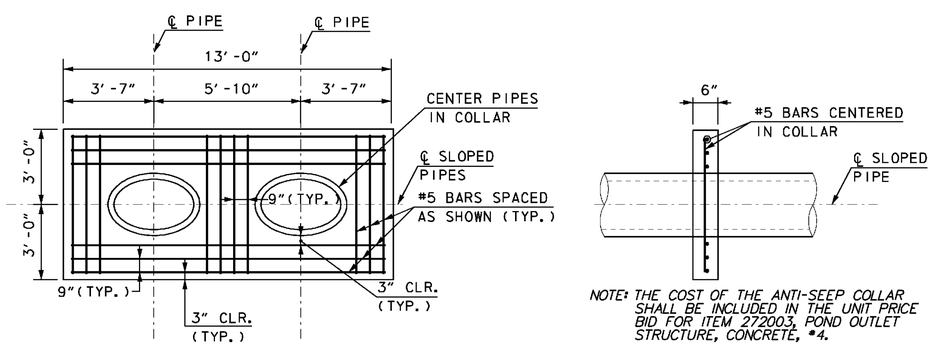

NOTE: THE COST OF THE ANTI-SEEP COLLAR SHALL BE INCLUDED IN THE UNIT PRICE BID FOR ITEM 272003, POND OUTLET STRUCTURE, CONCRETE, #4.

ANTI-SEEP COLLAR DETAIL

N. T. S.

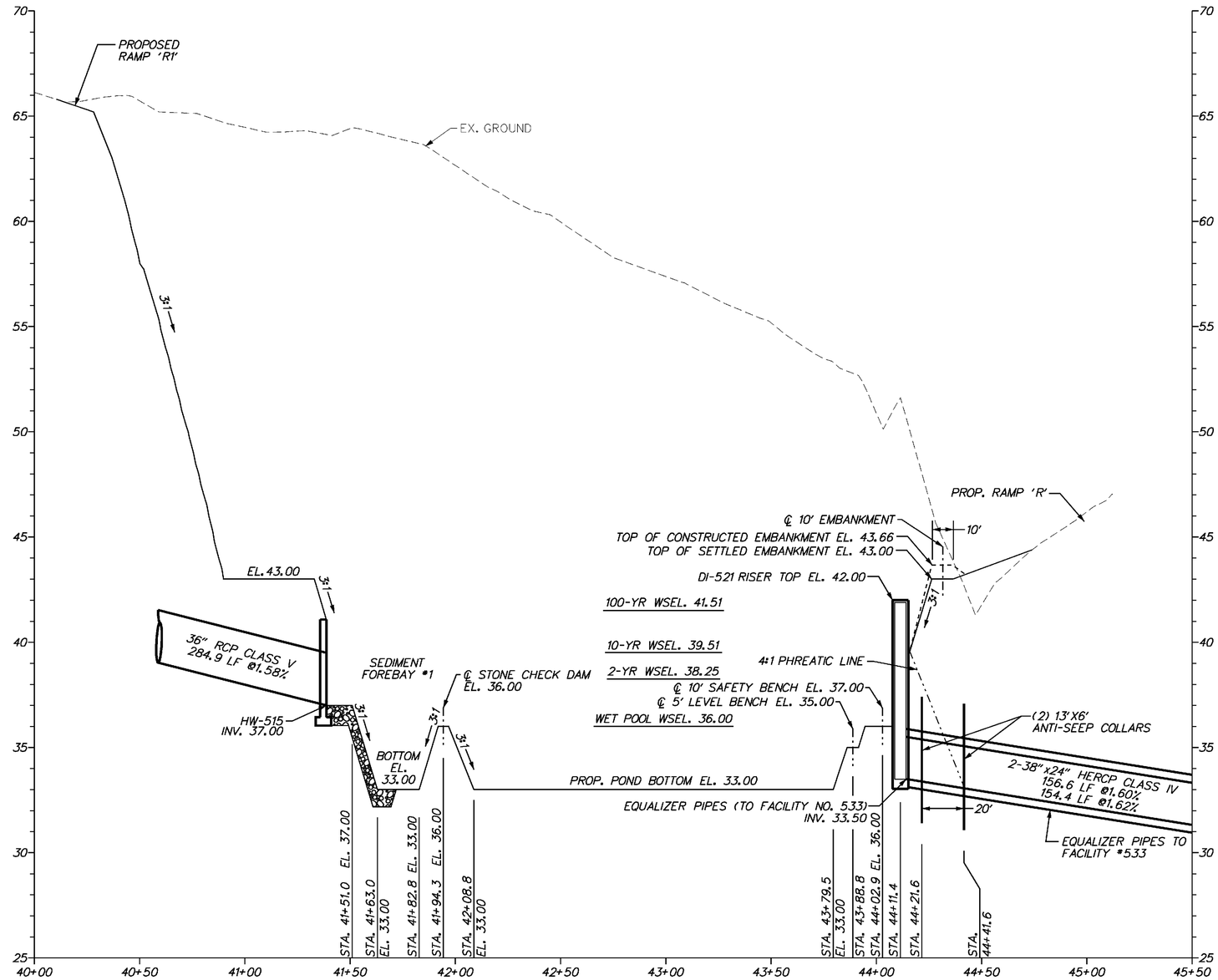

SPILLWAY PROFILE FOR SWM FACILITY NO. 534

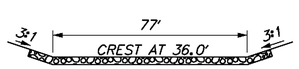

SECTION D-D

N. T. S.

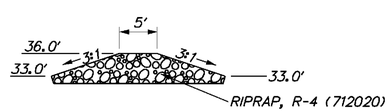

SECTION C-C

N. T. S.

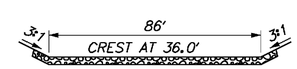

SECTION B-B

N. T. S.

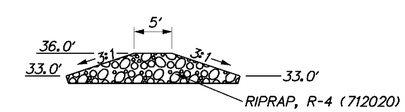

SECTION A-A

N. T. S.

9/9/2010 4:14:43 PM
M:\PROJECTS\2003\03059_DELTRNPK\SRIMALL\CADD\3009004\PLANS\SW11_RAMPR1.DGN

DELAWARE DEPARTMENT OF TRANSPORTATION	ADDENDUMS / REVISIONS	0 30 60 HORIZ: 1"=30' 0 3 6 VERT: 1"=3'	SR1 /I-95 INTERCHANGE - CHRISTIANA MALL ROAD BRIDGE	CONTRACT T201009004	BRIDGE NO. 1-223	STORMWATER MANAGEMENT DETAILS DelDOT SWM FACILITY #534	SHEET NO. 109
				COUNTY NEW CASTLE	DESIGNED BY: MK		TOTAL SHTS. 164
					CHECKED BY: REP		

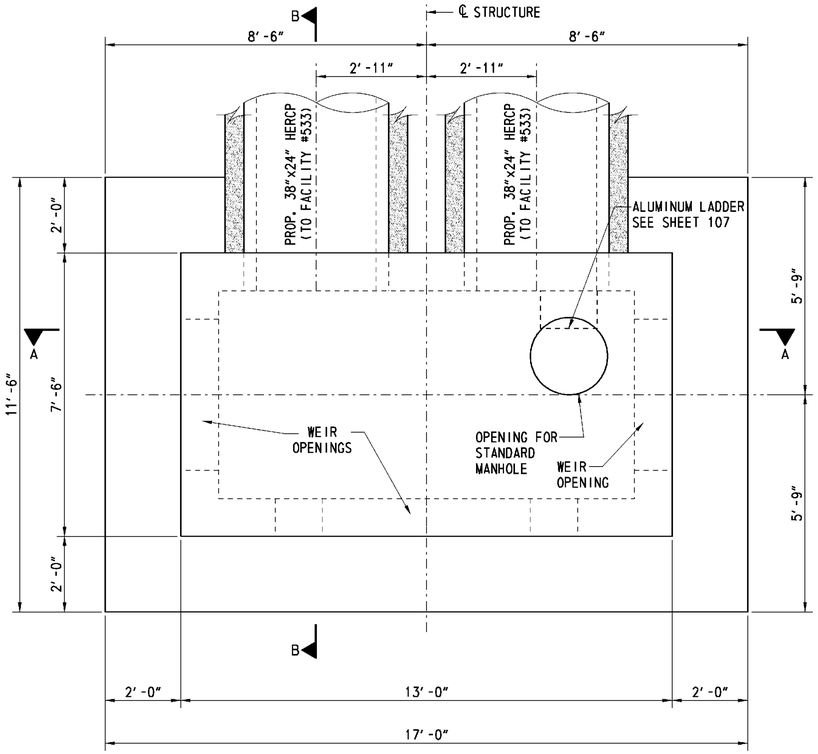

SWM FACILITY NO. 534 OUTLET STRUCTURE (272003) PLAN

SCALE: ½"=1'-0"

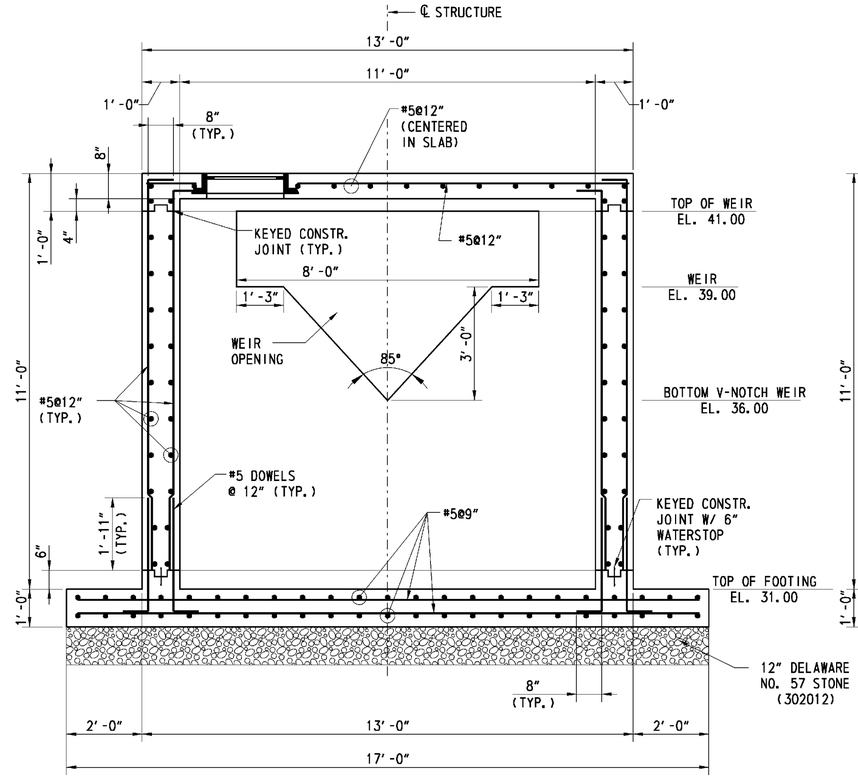

SWM FACILITY NO. 534 OUTLET STRUCTURE SECTION A-A (272003)

SCALE: ½"=1'-0"

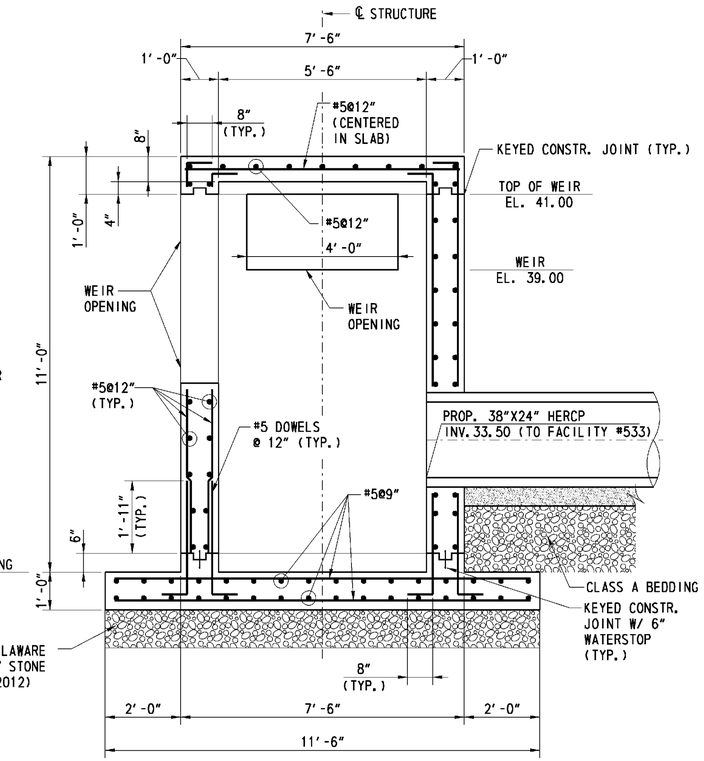

SWM FACILITY NO. 534 OUTLET STRUCTURE SECTION B-B (272003)

SCALE: ½"=1'-0"

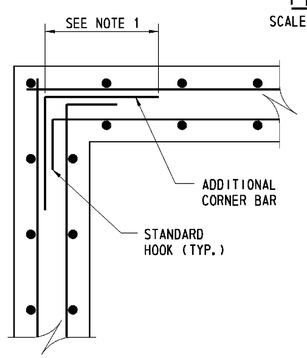

NOTES:
1. UNLESS OTHERWISE NOTED ON THE DRAWING PROVIDE MINIMUM LAP AS REQUIRED. IF BAR SIZES DIFFER, USE THE MIN. LAP LENGTH AS REQUIRED FOR THE SMALLER OF THE TWO BARS BEING SPLICED.
2. UNLESS OTHERWISE NOTED ON THE DRAWING, THE ADDITIONAL BARS SHALL BE THE SAME SIZE AND AT THE SAME SPACING AS THE HORIZONTAL BARS.

CORNER REINFORCING DETAIL

SCALE: 1"=1'-0"

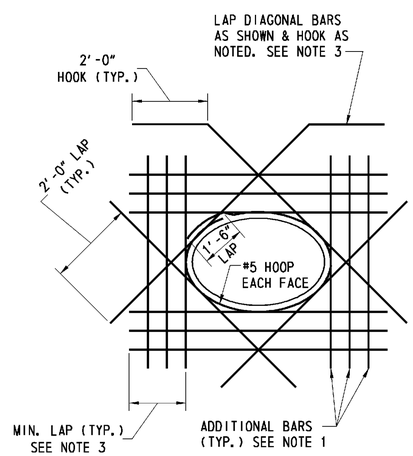

NOTES:
1. NUMBER OF ADDITIONAL REINFORCING BARS AT EACH SIDE OF OPENING SHALL EQUAL HALF THE NUMBER OF INTERRUPTED BARS IN EACH LAYER OF REINFORCING.
2. SIZE OF ADDITIONAL REINFORCING BARS TO EQUAL SIZE OF INTERRUPTED REINFORCING BARS.
3. PROVIDE STANDARD HOOK BARS IF LAP LENGTH EXTENSION CANNOT BE OBTAINED AT JOINTS OR OTHER OBSTRUCTIONS. PLACE ADDITIONAL BARS IN SAME PLANES AS INTERRUPTED REINFORCING.
4. SIZE OF DIAGONAL BARS SHALL BE THE SIZE OF THE LARGEST NORMAL REINFORCING BAR CUT, UNLESS OTHERWISE NOTED. LOCATE DIAGONALS IN EACH LAYER OF REINFORCING.
5. PLACE DIAGONAL BARS INSIDE NORMAL REINFORCING.
6. ALL REINFORCING TO CLEAR OPENING OR FLANGE COLLARS BY 2".
7. ADDITIONAL REINFORCING BARS ARE REQUIRED AT ALL LOCATIONS WHERE THE REINFORCING IS INTERRUPTED BY AN OPENING.

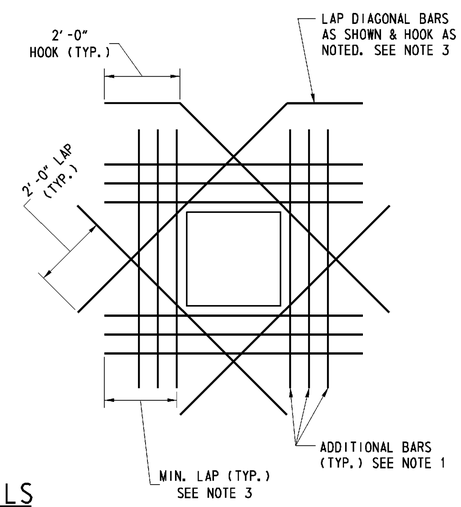

ADDITIONAL REINFORCING BAR DETAILS

NOT TO SCALE

DELAWARE DEPARTMENT OF TRANSPORTATION	ADDENDUMS / REVISIONS	SCALE AS NOTED	SR1/I-95 INTERCHANGE - CHRISTIANA MALL ROAD BRIDGE	CONTRACT T201009004	BRIDGE NO. 1-223	STORMWATER MANAGEMENT DETAILS DelDOT SWM FACILITY #534	SHEET NO. 110
				COUNTY NEW CASTLE	DESIGNED BY: MK		TOTAL SHTS. 164
					CHECKED BY: REP		

9/8/2010 4:10:30 PM
M:\PROJECTS\2003\03059_DELTRNPK\SRIMALL\CADD\3009004\PLANS\SW12_RAMPR1.DGN

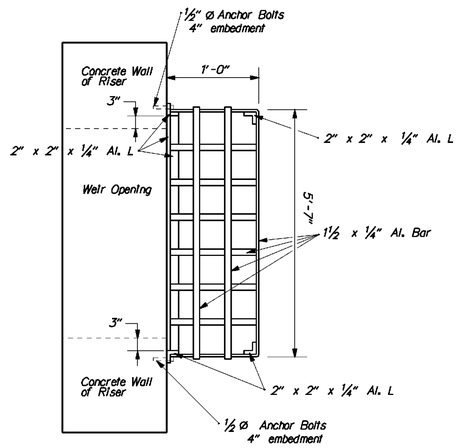

Side View

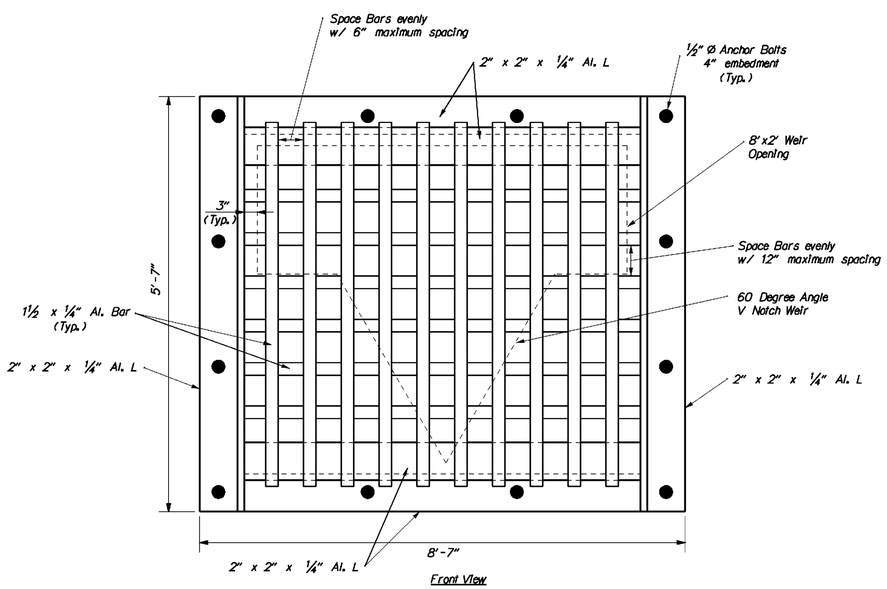

Front View

NOTES:
1. There should be no spaces larger than 6" through any opening. Therefore, additional bars may be necessary.
2. The whole structure shall be made of aluminum. The anchor bolts, nuts and washers shall be corrosion resistant.
3. ¾" diameter rods can be used in place of bars, but the above notes shall still apply.
4. The cost of the trash rack shall be included in the unit price bid for item 272003, Pond Outlet Structure, Concrete, #4.

SWM FACILITY NO. 534 RISER FRONT TRASH RACK

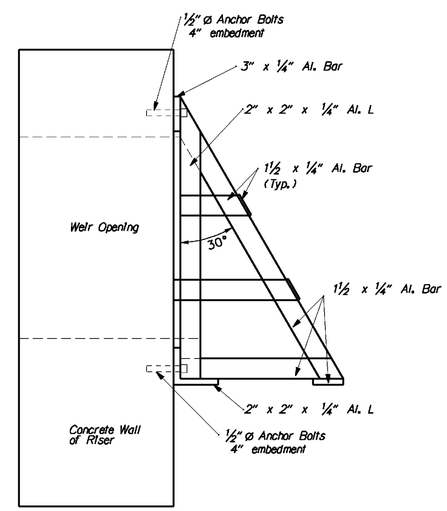

Side View

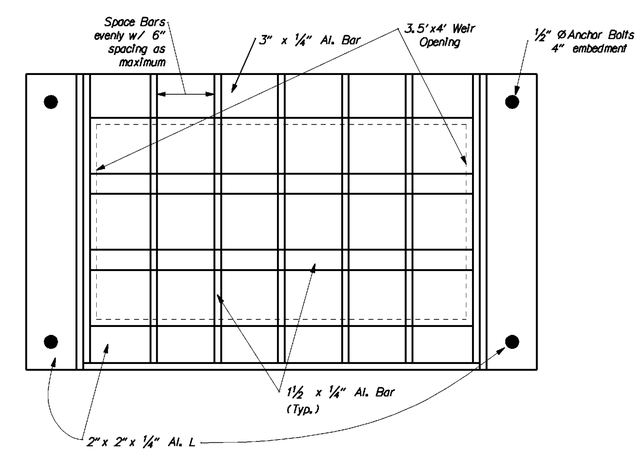

Front View

NOTES:
1. There should be no spaces larger than 6" through any opening. Therefore, additional bars may be necessary.
2. The whole structure shall be made of aluminum. The anchor bolts, nuts and washers shall be corrosion resistant.
3. ¾" diameter rods can be used in place of bars, but the above notes shall still apply.
4. The cost of the trash rack shall be included in the unit price bid for item 272003, Pond Outlet Structure, Concrete, #4.

SWM FACILITY NO. 534 RISER SIDE TRASH RACKS

DELAWARE DEPARTMENT OF TRANSPORTATION	ADDENDUMS / REVISIONS	NOT TO SCALE	SR1/I-95 INTERCHANGE - CHRISTIANA MALL ROAD BRIDGE	CONTRACT T201009004	BRIDGE NO. 1-223	STORMWATER MANAGEMENT DETAILS DelDOT SWM FACILITY #534	SHEET NO. 111
				COUNTY NEW CASTLE	DESIGNED BY: MK		TOTAL SHTS. 164
					CHECKED BY: REP		

8/27/2010 9:44:48 AM
M:\PROJECTS\2003\03059_DELTRNPK\SRIMALL\CADD\3009004\PLANS\SW13_RAMPR1.DGN

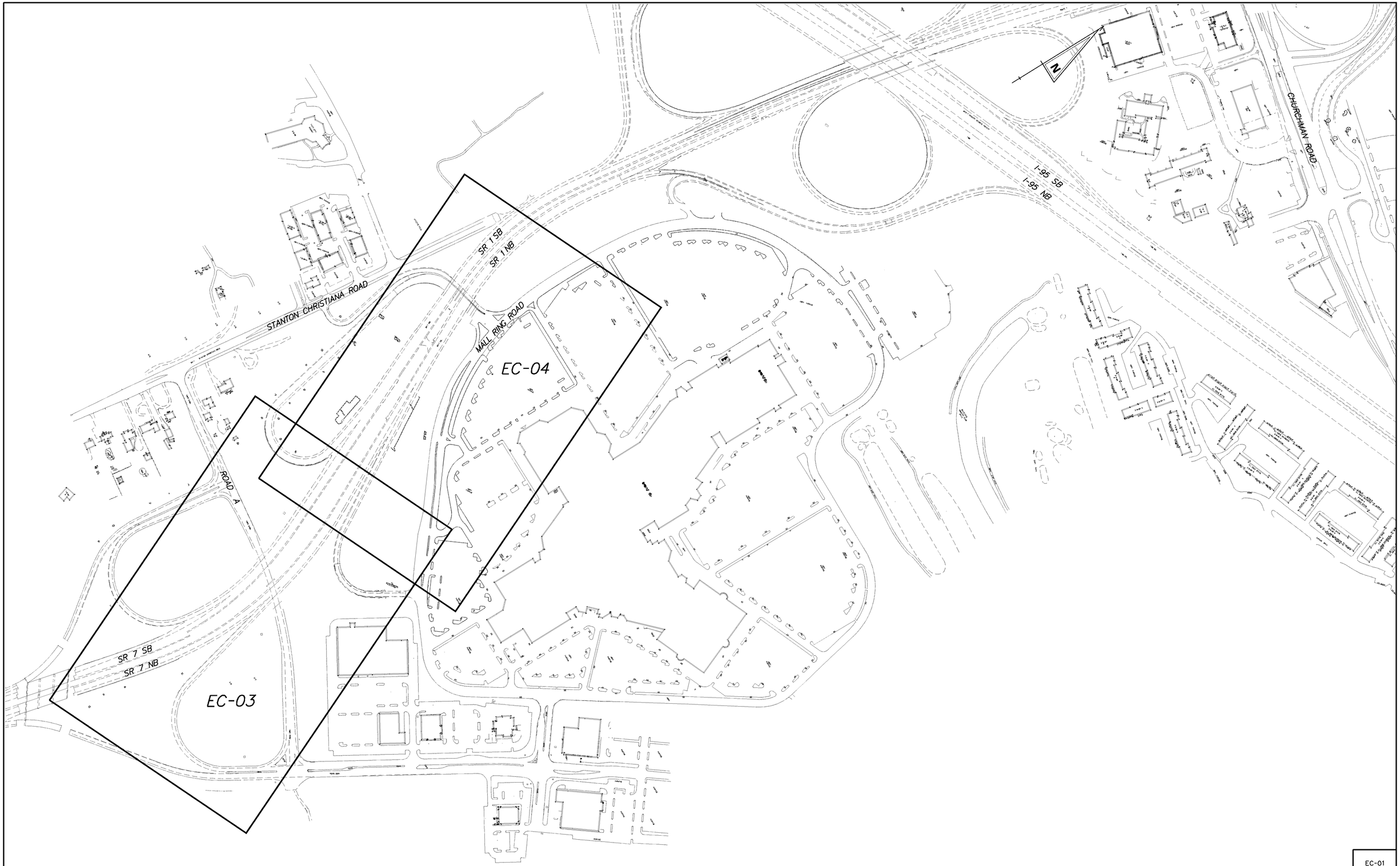

8/17/2010 11:22:53 AM
M:\PROJECTS\2003\03059_DELTRNPK\SRIMALL\CADD\3009004\PLANS\CP44_EC_RAMPR1.DGN

DELAWARE DEPARTMENT OF TRANSPORTATION

ADDENDUMS / REVISIONS

SCALE
0 200 400 600
FEET

SR1/I-95 INTERCHANGE - CHRISTIANA MALL ROAD BRIDGE

CONTRACT	BRIDGE NO.	1-223	
T201009004	DESIGNED BY:	MTV	
COUNTY			
NEW CASTLE	CHECKED BY:	JTR	

ENVIRONMENTAL COMPLIANCE PLAN

EC-01
SHEET NO.
112
TOTAL SHTS.
164

ENVIRONMENTAL COMPLIANCE NOTES

1. GENERAL NOTES

A. THE PURPOSE OF THESE ENVIRONMENTAL COMPLIANCE SHEETS IS TO IDENTIFY THOSE ITEMS ASSOCIATED WITH ENVIRONMENTAL COMPLIANCE. IMPACT CALCULATIONS ARE FOR AGENCY REPORTING PURPOSES ONLY AND ARE NOT TO BE USED FOR BIDDING PURPOSES.

B. IF A DEPARTURE FROM THE APPROVED PLANS (WHICH WOULD AFFECT ANY OF THE NATURAL AND/OR CULTURAL RESOURCE ISSUES) IS NECESSARY, THE DelDOT ENVIRONMENTAL STUDIES SECTION SHALL BE CONTACTED AT (302) 760-2264 TO ALLOW THE DEPARTMENT TO COORDINATE WITH THE APPROPRIATE RESOURCE AGENCIES FOR APPROVAL.

C. USE OF THESE SHEETS DOES NOT ALLEVIATE THE CONTRACTOR'S RESPONSIBILITY TO COMPLY WITH ALL CONDITIONS SET FORTH IN THE ENVIRONMENTAL STATEMENT AND PERMITS.

D. ALL CONSTRUCTION ACTIVITIES SHALL OCCUR WITHIN THE L.O.C. AS DESIGNATED ON THE PLAN SHEETS. ANY DEVIATION FROM THIS L.O.C. BY THE CONTRACTOR SHALL REQUIRE APPROVAL OBTAINED BY THE CONTRACTOR FROM ACOE, DNREC, AND SHPO.

E. THE IDENTIFIED PERMANENT AND TEMPORARY IMPACTS TO WETLANDS SHOWN ON THE ENVIROMENTAL COMPLIANCE SHEETS ARE THE ONLY AUTHORIZED IMPACTS. ANY CHANGE IN THE CONTRACT PLANS AFFECTING THESE AREAS WILL REQUIRE REVIEW AND APPROVAL FROM ACOE AND DNREC.

F. CONTACT INFORMATION:
DelDOT, ENVIRONMENTAL STUDIES, TERRY FULMER, 1-302-760-2095

2. NATURAL RESOURCE ISSUES:

A. TEMPORARY WETLAND IMPACTS SHALL BE RESTORED TO ORIGINAL GRADES, AND SEEDED USING THE FOLLOWING SEED MIX (TEMPORARY GRASS SEEDING - WET GROUND 734018).

B. PERMIT REQUIREMENTS / APPROVALS*
ARMY CORPS OF ENGINEERS (ACOE) - INDIVIDUAL PERMIT

INDIVIDUAL PERMIT: CENAP-OP-R-200300700-11**
- APPROVED FEBRUARY 26, 2007; MODIFIED OCTOBER 29, 2007 AND OCTOBER 21, 2008; EXPIRES DECEMBER 31, 2013

DELAWARE DEPARTMENT OF NATURAL RESOURCES AND ENVIRONMENTAL CONTROL (DNREC)

SUBAQUEOUS LAND PERMIT: SP-014/06**
- APPROVED DECEMBER 8, 2006; EXPIRES DECEMBER 8, 2011
WETLANDS PERMIT: WE-388/06**
- APPROVED DECEMBER 8, 2006; EXPIRES DECEMBER 8, 2011
WATER QUALITY CERTIFICATION: WQ-389/06**
- APPROVED DECEMBER 8, 2006; EXPIRES DECEMBER 8, 2011
DELAWARE COASTAL ZONE MANAGEMENT
FEDERAL CONSISTENCY CERTIFICATION- **
APPROVED DECEMBER 12, 2005 AND AUGUST 24, 2006; NO EXPIRATION

* - THE PERMITS / APPROVALS LISTED ARE THOSE REQUIRED FOR THIS PROJECT. THE LISTED PERMITS / APPROVALS SHALL BE DISPLAYED ON-SITE DURING THE ENTIRE CONSTRUCTION PERIOD.

** - THE CONTRACTOR MUST ENSURE THAT THESE PERMITS/APPROVALS (ACOE,DNREC) ARE IN THEIR POSSESSION PRIOR TO THE BEGINNING OF CONSTRUCTION IN THE PERMITTED AREA(S) AND SHALL BE DISPLAYED ON-SITE DURING THE ENTIRE CONSTRUCTION PERIOD.

C. CONSTRUCTION RESTRICTIONS:

ENDANGERED SPECIES: NONE

FISHERIES: NONE

MIGRATORY BIRDS: NONE

D. STREAM CREATION/RESTORATION:

I. AREAS OF THE CHANNEL BOTTOM AFFECTED BY CONSTRUCTION (INCLUDING, BUT NOT LIMITED TO, THE LOCATION OF SUMP PITS, STABILIZED OUTFALLS, TEMPORARY PIPES AND/OR SANDBAG DIKES AND DIVERSIONS) SHALL BE RESTORED TO EXISTING CONDITIONS. ANY CAVITIES OR SCOUR HOLES RESULTING FROM CONSTRUCTION ACTIVITIES SHALL BE FILLED WITH CHANNEL BED FILL. PAYMENT UNDER ITEM #712531 - CHANNEL BED FILL.

II. THE RIPRAP IN THE ENERGY DISSIPATOR SHALL BE RECESSED ONE FOOT BELOW STREAMBED ELEVATION AND CHOKED WITH BORROW TYPE B (209002) SO THAT ALL OF THE VOIDS IN THE RIPRAP ARE FILLED WITH MATERIAL. THE RIPRAP SHALL THEN BE COVERED WITH 12" CHANNEL BED FILL (712531) TO MATCH EXISTING ELEVATIONS.

III. WHEN ALL EROSION AND SEDIMENT CONTROL MEASURES ARE REMOVED AND THE STREAM RETURNS TO ITS NATURAL FLOW CONDITIONS, THE FLOW MUST REMAIN ABOVE GROUND AND ABOVE THE RIPRAP (I.E. THE FLOW CANNOT BE 'LOST' IN THE RIPRAP OR BENEATH THE STRUCTURE). IF THIS IS NOT ACHIEVED, THE CONTRACTOR WILL BE REQUIRED TO TAKE CORRECTIVE ACTION AT THE CONTRACTOR'S EXPENSE.

E. PROTECTION OF RESOURCES:

I. WETLAND AND STREAM RESOURCES OCCUR WITHIN AND IN THE VICINITY OF THE PROJECT. ACCESS INTO THESE RESOURCE AREAS WHICH IS NOT SPECIFICALLY AUTHORIZED BY THE ACOE AND DNREC PERMITS (AS ILLUSTRATED ON THESE ENVIRONMENTAL COMPLIANCE SHEETS) IS STRICTLY PROHIBITED.

II. CONSTRUCTION SAFETY FENCE SHALL BE USED ALONG THE LIMITS OF CONSTRUCTION IN ALL AREAS WHERE WATER/WETLANDS ARE BEING IMPACTED (AS SHOWN ON EC SHEETS), AND ALSO IN ANY AREA WHERE WATER/WETLANDS EXIST WITHIN 20 FEET OF THE LOC (AS SHOWN ON CONSTRUCTION PLANS). CONTRACTOR ACCESS BEYOND THE LOC IS STRICTLY PROHIBITED.

3. CULTURAL RESOURCE ISSUES:

A. THERE ARE NO KNOWN SITES WITHIN THE PROJECT LIMITS OF CONSTRUCTION. ANY WORK OUTSIDE THE L.O.C. LIMITS, INCLUDING OFF-SITE DISPOSAL SITES AND STOCKPILE AREAS WILL NEED TO BE IN AN UPLAND (I.E. NON-WETLAND, NON-CORPS JURISDICTIONAL) SITE CLEARED BY THE STATE HISTORICAL PRESERVATION OFFICE (SHPO).

4. WETLAND MITIGATION

A. ALL WETLAND REPLACEMENT OBLIGATIONS HAVE BEEN MET THROUGH THE CATHCART WETLAND MITIGATION SITE.

SHEETS PREPARED BY: RUMMEL, KLEPPER & KAHL, LLP
DATE: JUNE 17, 2010

SHEETS UPDATED: JUNE 17, 2010

WETLANDS/WATERWAYS DELINEATED BY RUMMEL, KLEPPER & KAHL, LLP
JD APPROVALS JANUARY 5, 2005; MARCH 14, 2006; JANUARY 9, 2007

WETLAND/WATERS BOUNDARIES HAVE BEEN MODIFIED TO ACCURATELY REPRESENT JURISDICTIONAL RESOURCES REMAINING FOLLOWING CONSTRUCTION OF THE MAINLINE WIDENING PHASE OF THE PROJECT.

ALL IDENTIFIED WATERS/WETLANDS ON THESE ENVIRONMENTAL COMPLIANCE SHEETS ARE ACOE JURISDICTIONAL. DNREC JURISDICTION IS IDENTIFIED ON THE RESPECTIVE SHEETS.

PERMANENT WETLAND IMPACTS

IDENTIFIER	IMPACT	AREA (SF)	AREA (AC)	VOLUME (CY)	WETLAND NAME
4-W1	EXCAVATION	5,292	0.1215	N/A	WL
4-W2	FILL	6,874	0.1578	1,273	WL
4-W3	RIPRAP	1,892	0.0434	70	WL
TOTAL PERMANENT WETLAND IMPACTS		14,058	0.3227	1,343	

PERMANENT OPEN WATERS IMPACTS

IDENTIFIER	IMPACT	AREA (SF)	AREA (AC)	VOLUME (CY)	WETLAND NAME
3-01	RIPRAP	607	0.0139	54	WK
3-02	RIPRAP	12	0.0003	1	WK-1
TOTAL PERMANENT OPEN WATER IMPACTS		619	0.0142	55	

TEMPORARY OPEN WATER IMPACTS

IDENTIFIER	IMPACT	AREA (SF)	AREA (AC)	VOLUME (CY)	WETLAND NAME
3-OT1	E&S AREA	217	0.0050	N/A *	WK
3-OT2	E&S AREA	39	0.0009	N/A *	WK-1
TOTAL TEMPORARY OPEN WATER IMPACTS		256	0.0059	N/A	

*TEMPORARY IMPACT DUE TO SILT FENCE PLACEMENT, VOLUME DOES NOT APPLY.

8/18/2010 4:33:00 PM
M:\PROJECTS\2003\03059_DELTRNPK\SR1MALL\CADD\3009004\PLANS\CP45_EC_RAMPR1.DGN

DELAWARE DEPARTMENT OF TRANSPORTATION

ADDENDUMS / REVISIONS

NOT TO SCALE

SR1/I-95 INTERCHANGE - CHRISTIANA MALL ROAD BRIDGE

CONTRACT	BRIDGE NO.	1-223
T201009004	DESIGNED BY:	MTV
COUNTY		
NEW CASTLE	CHECKED BY:	JTR

ENVIRONMENTAL COMPLIANCE PLAN

EC-02

SHEET NO. 113

TOTAL SHTS. 164

LEGEND

	TEMPORARY IMPACT AREA
	PERMANENT IMPACT AREA
WL	WETLAND BOUNDARY
OHW/WL	ORD. HIGH WATER / WETLAND
OHW	ORDINARY HIGH WATER

XX / XX — IMPACT AREA TYPE ID. (SEE BELOW) / IMPACT AREA ID. AND/OR NUMBER

T = TEMPORARY IMPACT

W = FEDERALLY REGULATED WATERS OF THE U.S. (WETLANDS)

O = FEDERALLY REGULATED WATERS OF THE U.S. (AREA OTHER THAN WETLANDS)

NOTE:
WATERS WA AND WK ON THIS SHEET ARE DNREC JURISDICTIONAL.

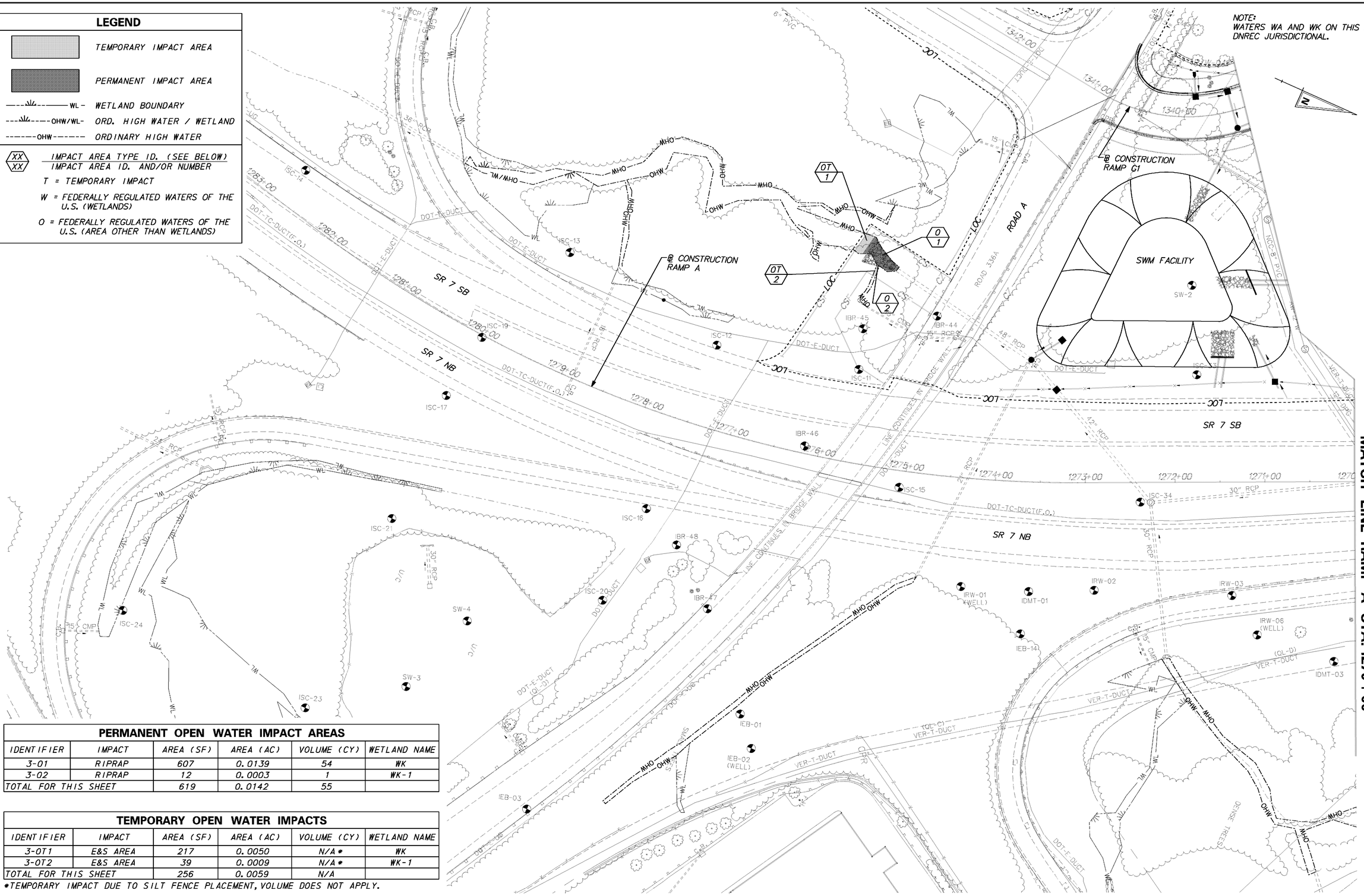

PERMANENT OPEN WATER IMPACT AREAS					
IDENTIFIER	IMPACT	AREA (SF)	AREA (AC)	VOLUME (CY)	WETLAND NAME
3-01	RIPRAP	607	0.0139	54	WK
3-02	RIPRAP	12	0.0003	1	WK-1
TOTAL FOR THIS SHEET		619	0.0142	55	

TEMPORARY OPEN WATER IMPACTS					
IDENTIFIER	IMPACT	AREA (SF)	AREA (AC)	VOLUME (CY)	WETLAND NAME
3-OT1	E&S AREA	217	0.0050	N/A*	WK
3-OT2	E&S AREA	39	0.0009	N/A*	WK-1
TOTAL FOR THIS SHEET		256	0.0059	N/A	

*TEMPORARY IMPACT DUE TO SILT FENCE PLACEMENT, VOLUME DOES NOT APPLY.

9/15/2010 11:34:40 AM
M:\PROJECTS\2003\03059_DELTRNPK\SRIMALL\CADD\3009004\PLANS\CP46_EC_RAMPR.DGN

DELAWARE DEPARTMENT OF TRANSPORTATION

ADDENDUMS / REVISIONS

SCALE 0 50 100 150 FEET

SR1/I-95 INTERCHANGE - CHRISTIANA MALL ROAD BRIDGE

CONTRACT	BRIDGE NO.	1-223	
T201009004	DESIGNED BY:	MTV	
COUNTY			
NEW CASTLE	CHECKED BY:	JTR	

ENVIRONMENTAL COMPLIANCE PLAN

	EC-03
SHEET NO.	114
TOTAL SHTS.	164

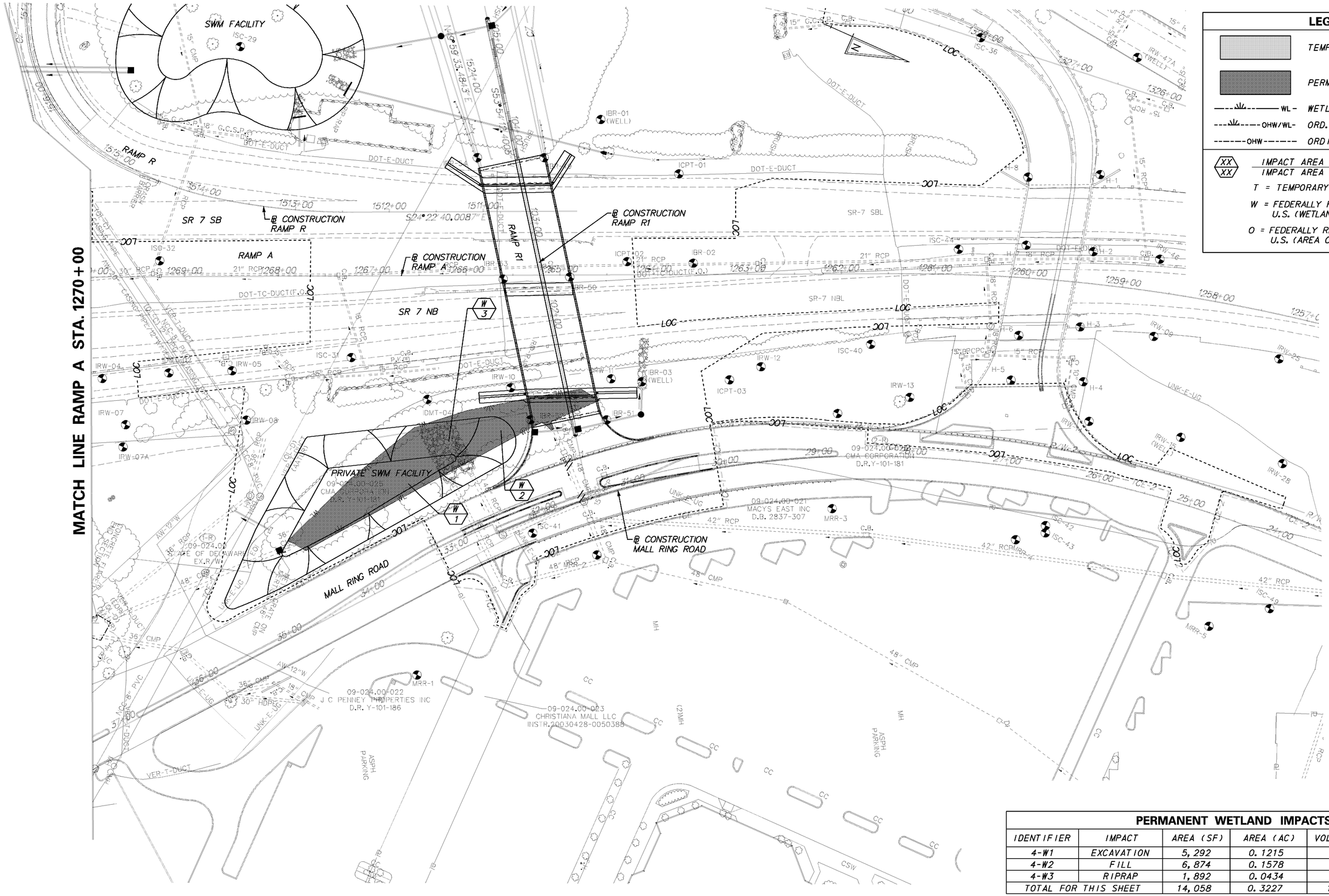

PERMANENT WETLAND IMPACTS

IDENTIFIER	IMPACT	AREA (SF)	AREA (AC)	VOLUME (CY)	WETLAND NAME
4-W1	EXCAVATION	5,292	0.1215	N/A	WL
4-W2	FILL	6,874	0.1578	1,273	WL
4-W3	RIPRAP	1,892	0.0434	70	WL
TOTAL FOR THIS SHEET		14,058	0.3227	1,343	

EC-04

DELAWARE DEPARTMENT OF TRANSPORTATION

ADDENDUMS / REVISIONS

SCALE 0 50 100 150 FEET

SR1/I-95 INTERCHANGE - CHRISTIANA MALL ROAD BRIDGE

CONTRACT	BRIDGE NO.	1-223
T201009004	DESIGNED BY:	MTV
COUNTY		
NEW CASTLE	CHECKED BY:	JTR

ENVIRONMENTAL COMPLIANCE PLAN

SHEET NO. 115
TOTAL SHTS. 164

9/15/2010 11:36:04 AM
M:\PROJECTS\2003\03059_DELTRNPK\SRIMALL\CADD\3009004\PLANS\CP47_EC_RAMPR1.DGN

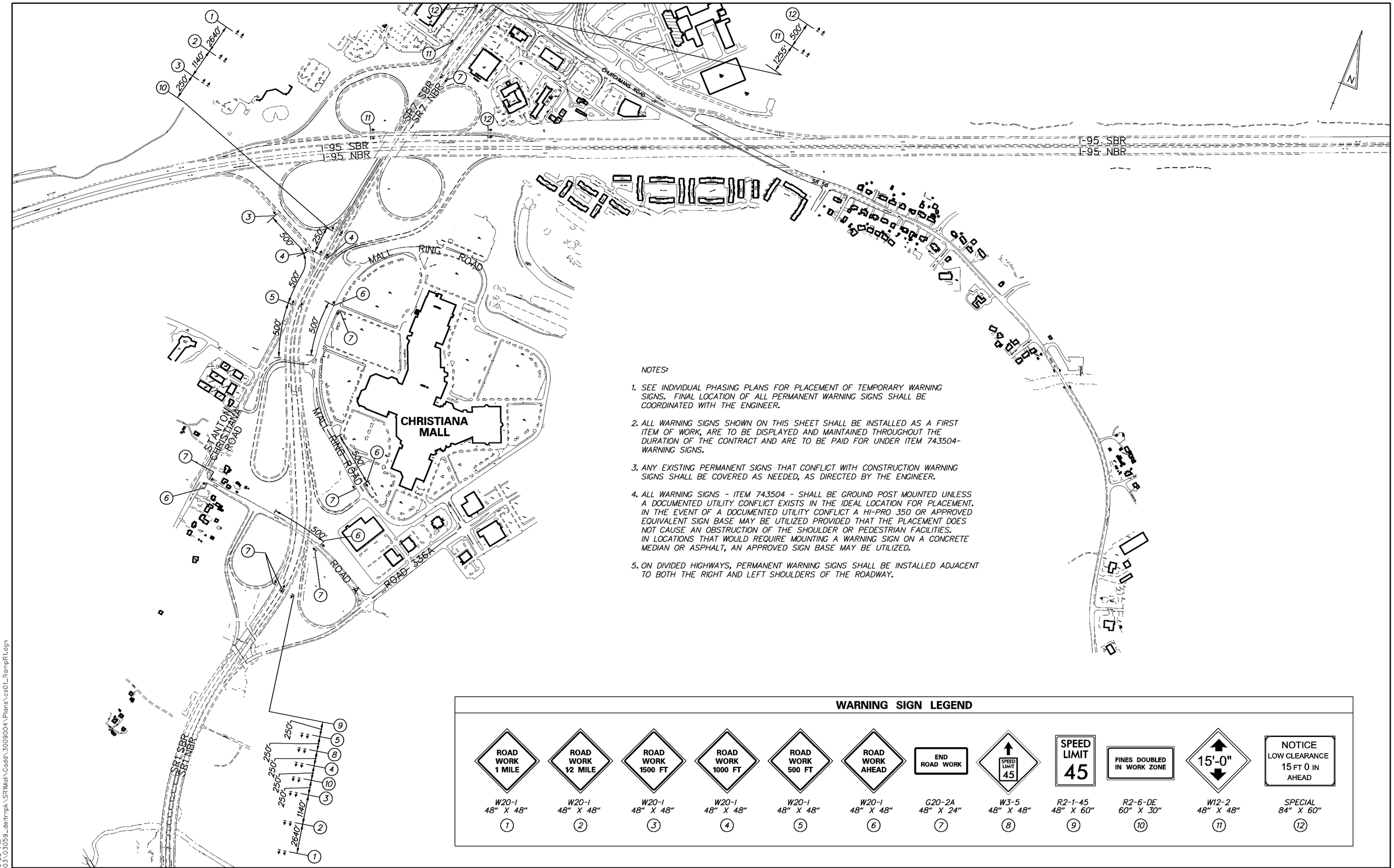

NOTES:

1. SEE INDIVIDUAL PHASING PLANS FOR PLACEMENT OF TEMPORARY WARNING SIGNS. FINAL LOCATION OF ALL PERMANENT WARNING SIGNS SHALL BE COORDINATED WITH THE ENGINEER.
2. ALL WARNING SIGNS SHOWN ON THIS SHEET SHALL BE INSTALLED AS A FIRST ITEM OF WORK, ARE TO BE DISPLAYED AND MAINTAINED THROUGHOUT THE DURATION OF THE CONTRACT AND ARE TO BE PAID FOR UNDER ITEM 743504-WARNING SIGNS.
3. ANY EXISTING PERMANENT SIGNS THAT CONFLICT WITH CONSTRUCTION WARNING SIGNS SHALL BE COVERED AS NEEDED, AS DIRECTED BY THE ENGINEER.
4. ALL WARNING SIGNS - ITEM 743504 - SHALL BE GROUND POST MOUNTED UNLESS A DOCUMENTED UTILITY CONFLICT EXISTS IN THE IDEAL LOCATION FOR PLACEMENT. IN THE EVENT OF A DOCUMENTED UTILITY CONFLICT A HI-PRO 350 OR APPROVED EQUIVALENT SIGN BASE MAY BE UTILIZED PROVIDED THAT THE PLACEMENT DOES NOT CAUSE AN OBSTRUCTION OF THE SHOULDER OR PEDESTRIAN FACILITIES. IN LOCATIONS THAT WOULD REQUIRE MOUNTING A WARNING SIGN ON A CONCRETE MEDIAN OR ASPHALT, AN APPROVED SIGN BASE MAY BE UTILIZED.
5. ON DIVIDED HIGHWAYS, PERMANENT WARNING SIGNS SHALL BE INSTALLED ADJACENT TO BOTH THE RIGHT AND LEFT SHOULDERS OF THE ROADWAY.

WARNING SIGN LEGEND

Sign	Size	Number
ROAD WORK 1 MILE	W20-1 48" X 48"	1
ROAD WORK 1/2 MILE	W20-1 48" X 48"	2
ROAD WORK 1500 FT	W20-1 48" X 48"	3
ROAD WORK 1000 FT	W20-1 48" X 48"	4
ROAD WORK 500 FT	W20-1 48" X 48"	5
ROAD WORK AHEAD	W20-1 48" X 48"	6
END ROAD WORK	G20-2A 48" X 24"	7
SPEED LIMIT 45	W3-5 48" X 48"	8
SPEED LIMIT 45	R2-1-45 48" X 60"	9
FINES DOUBLED IN WORK ZONE	R2-6-DE 60" X 30"	10
15'-0"	W12-2 48" X 48"	11
NOTICE LOW CLEARANCE 15 FT 0 IN AHEAD	SPECIAL 84" X 60"	12

DELAWARE DEPARTMENT OF TRANSPORTATION

ADDENDUMS / REVISIONS

SCALE 0 400 800 1200 FEET

SR1/I-95 INTERCHANGE - CHRISTIANA MALL ROAD BRIDGE

CONTRACT	T201009004
COUNTY	NEW CASTLE
BRIDGE NO.	1-223
DESIGNED BY:	EDJ
CHECKED BY:	RLS

CONSTRUCTION PHASING, M.O.T., AND EROSION CONTROL PLAN

SHEET NO. 116
TOTAL SHTS. 164

10/8/2010 12:46:53 PM
M:\projects\2003\03059_deltrnpk\SRMall\Cadd\3009004\Plans\cs01_RampR1.dgn

TRAFFIC CONTROL- GENERAL NOTES

1. MAINTENANCE OF TRAFFIC DURING LANE CLOSURES AND LANE SHIFTS SHALL CONFORM TO CASES 7 AND 9 OF THE DELAWARE MUTCD.

2. GRADING AND MAINTAINING HOT-MIX TRM THAT IS BEING USED AS A TRAVELWAY, DRIVEWAY, ACCESS RAMP, ETC. SHALL BE INCIDENTAL TO ITEM 763500 - MAINTENANCE OF TRAFFIC. EXCESS BASE COURSE MATERIAL SHALL BE PUSHED AHEAD AND USED IN THE NEXT SEGMENT AND SHALL BE INCIDENTAL TO THE PARTICULAR BASE COURSE PAY ITEM. NO PAYMENT SHALL BE MADE FOR TEMPORARY ROADWAY MATERIAL (TRM) USED TO PROTECT EDGE DROP-OFFS, UNLESS THE MATERIAL IS EVENTUALLY UTILIZED AS PART OF A PERMANENT ROADWAY AT WHICH TIME THE MATERIAL WOULD BE PAID FOR UNDER THE RESPECTIVE CONTRACT MATERIAL ITEM. CONSTRUCTION OF A PLANNED RUNAROUND OR DETOUR WOULD BE ELIGIBLE FOR PAYMENT AS SPECIFIED IN THE CONTRACT.

3. THIS PROJECT IS CONSIDERED A SIGNIFICANT PROJECT AS DEFINED BY DELDOT'S WORK ZONE MOBILITY PROCEDURES AND GUIDELINES. A TYPE B TRANSPORTATION MANAGEMENT PLAN (TMP) HAS BEEN PREPARED AND IS AVAILABLE FOR VIEWING BY CONTACTING THE DEPARTMENT'S SAFETY PROGRAMS MANAGER AT (302)659-4060. ALL MONITORING REQUIREMENTS OF THE TMP SHALL BE CONDUCTED BY DELDOT FORCES UNLESS OTHERWISE DIRECTED BY THE ENGINEER. MODIFICATIONS TO THE TMP SHALL BE COMPLETED BY THE CONTRACTOR IF CHANGES TO THE TIME RESTRICTIONS OR THE TRAFFIC CONTROL PLAN ARE DESIRED. THE MODIFIED TMP SHALL BE PREPARED BY A PROFESSIONAL ENGINEER, REGISTERED IN THE STATE OF DELAWARE.

4. A TYPE II TRUCK MOUNTED ATTENUATOR (TMA) SHALL BE REQUIRED ON THIS PROJECT DURING THE FOLLOWING PAVEMENT OPERATIONS: TEMPORARY/PERMANENT PAVEMENT MARKINGS, ROADSIDE SPRAYING, PATCHING, MILLING, SWEEPING, TEMPORARY TRAFFIC BARRIER PLACEMENT OR AS DIRECTED BY THE ENGINEER. THE ROLL AHEAD DISTANCE SHALL BE AS PER THE MANUFACTURER'S RECOMMENDATIONS. THE TMA SHALL CONFORM TO THE REQUIREMENTS OF SECTION 6F.82 OF THE DELAWARE MUTCD.

TRAFFIC CONTROL- PROJECT NOTES

1. AS THE FIRST ORDER OF WORK, PRIOR TO ANY CONSTRUCTION, THE ADVANCE SIGNING WILL BE ERECTED AS SHOWN ON THE WARNING SIGN PLAN. THE WARNING SIGNS SHALL REMAIN IN PLACE THROUGHOUT CONSTRUCTION AND MAINTAINED IN SATISFACTORY CONDITION IN ACCORDANCE WITH THE SPECIFICATIONS AND ATSSA'S QUALITY GUIDELINES FOR TEMPORARY TRAFFIC CONTROL DEVICES.

2. THE CONTRACTOR SHALL SUPPLY MESSAGE BOARDS UNDER ITEM 743004 - FURNISH AND MAINTAIN PORTABLE CHANGEABLE MESSAGE SIGN. MOVING THE MESSAGE BOARDS TO DIFFERENT LOCATIONS DURING CONSTRUCTION WILL BE INCIDENTAL TO ITEM 743004. AT A MINIMUM, MESSAGE BOARDS SHALL BE POSTED TWO WEEKS PRIOR TO THE START OF CONSTRUCTION AND CHANGES IN TRAFFIC PATTERNS. SIX PLASTIC DRUMS SHALL BE PLACED IN FRONT OF THE MESSAGE BOARD.

3. ROADWAY AND SHOULDER WORK SHALL BE PERFORMED IN A MANNER SUCH THAT POSITIVE DRAINAGE OF THE ROADWAY SURFACE IS MAINTAINED THROUGHOUT CONSTRUCTION. ALL WORK AND MATERIALS TO PROVIDE AND MAINTAIN THIS DRAINAGE SHALL BE INCIDENTAL TO ITEM 763500 - MAINTENANCE OF TRAFFIC.

4. FLOODLIGHTING SHALL BE PAID AS OUTLINED IN ITEM 743005, FURNISH AND MAINTAIN PORTABLE LIGHT ASSEMBLY-THE ATSSA SUPERVISOR SHALL APPROVE THE POSITION OF THE LIGHT ASSEMBLY. SHOULD THE NIGHT TIME OPERATIONS REQUIRE FLAGGER STATIONS OR LANE TAPERS, THE FLAGGERS AND LANE TAPERS AND WORK AREA SHALL BE ILLUMINATED AS DIRECTED BY THE ENGINEER.

5. ENTRANCE AND SIDE ROAD TIE-IN AREAS SHALL BE CONSTRUCTED ONLY TO THE EXTENT THAT CAN BE PAVED OR TEMPORARILY STABILIZED WITH HOT-MIX TRM AT THE END OF A WORK DAY.

6. THE CONTRACTOR SHALL PLACE A WEDGE OF HOT-MIX AT 20:1 AROUND CONSTRUCTED DRAINAGE INLETS PRIOR TO PLACEMENT OF FINAL HOT-MIX TYPE C PAVING. THE CONTRACTOR SHALL NOTCH DRAINAGE INLETS TO MAINTAIN POSITIVE DRAINAGE CONDITIONS ALONG THE ROADWAY PRIOR TO PLACEMENT OF TYPE C FINAL HOT-MIX PAVING. NOTCHES SHALL BE REPAIRED TO PROPER CONDITION PRIOR TO OVERLAY. COST OF THIS WORK SHALL BE INCIDENTAL TO ITEM 710001 - ADJUSTING AND REPAIRING EXISTING DRAINAGE INLET.

7. ALL TEMPORARY PAVEMENT MARKINGS SHALL BE EPOXY MATERIAL WHEN INSTALLED ON EXISTING OR TEMPORARY PAVEMENT FOR TEMPORARY TRAFFIC PATTERNS, UNLESS OTHERWISE INDICATED ON PLANS OR DIRECTED BY THE ENGINEER. DURING INTERIM MILLING OPERATIONS, TEMPORARY PAINT SHALL BE USED ON MILLED SURFACES. TEMPORARY STRIPING SHALL NOT BE INSTALLED ON THE FINAL SURFACE COURSE OR NEW PAVEMENT UNLESS IT IS REMOVABLE TAPE MATERIAL. WHERE PAVEMENT MARKINGS ARE NOT INDICATED ON THE PLANS, THE PAVEMENT MARKINGS FROM THE PREVIOUS STAGE ARE TO BE MAINTAINED OR THE FINAL PROPOSED PERMANENT MARKINGS ARE TO BE INSTALLED AND MAINTAINED UNLESS OTHERWISE DIRECTED BY THE ENGINEER.

8. ALL EXISTING PUBLIC ROADWAY LIGHTING, PARKING LOT LIGHTING AND PRIVATE LIGHTING WITHIN THE PROJECT LIMITS NOT DIRECTLY IMPACTED BY CONSTRUCTION SHALL REMAIN OPERATIONAL AT ALL TIMES THROUGHOUT THE CONSTRUCTION.

9. TRAFFIC OFFICERS SHALL BE UNIFORMED AND EQUIPPED WITH MARKED DELAWARE STATE POLICE VEHICLES WHICH SHALL INCLUDE A SPEED MEASURING DEVICE. THE ATSSA SUPERVISOR SHALL INFORM THE STATE TROOPER OF THE OVERALL MOT SCHEME, AS WELL AS THE SPECIFICS OF HIS/HER FUNCTION. THE CONTRACTOR SHALL BE REQUIRED TO INSURE THAT A TRAFFIC OFFICER IS ON DUTY DURING ALL PEAK HOURS AND DURING ALL PERIODS OF ANY LANE CLOSURES ON SR 7 OR I-95. PEAK HOURS SHALL BE DEFINED AS 5:00 a.m. - 9:00 a.m. AND 3:00 p.m. - 7:00 p.m. ON WEEKDAYS; 10:00 a.m. - 2:00 p.m. ON SATURDAYS; AND 4:00 p.m. - 8:00 p.m. ON SUNDAYS. THE PEAK HOUR DURATION MAY BE EXTENDED DURING HOLIDAYS AS DIRECTED BY THE ENGINEER.

10. THE CONTRACTOR SHALL REDUCE THE SPEED LIMIT ON NORTHBOUND SR 7 TO 45 MPH, THROUGHOUT THE PROJECT LIMITS FOR THE DURATION OF THE PROJECT OR AS DIRECTED BY THE ENGINEER. THE SPEED ADVISORY SIGN LOCATIONS SHALL BE AS SHOWN ON THE ADVANCE WARNING SIGN PLANS OR AS DIRECTED BY THE ENGINEER. THE PAYMENT SHALL BE FOR EACH SIGN INSTALLED AND ACCEPTED UNDER ITEM 743504, WARNING SIGNS. THE CONTRACTOR SHALL REQUEST THAT THE NORTH DISTRICT OFFICE CONTACT DELDOT'S TRAFFIC SECTION TWO (2) WEEKS PRIOR TO ANY SPEED REDUCTIONS BEING IMPLEMENTED ON THE PROJECT. THE CONTRACTOR SHALL VERIFY THAT A "SPEED REDUCTION RESOLUTION" HAS BEEN PASSED PRIOR TO ERECTING ANY SPEED REDUCTION SIGNS IN THE CONSTRUCTION AREA.

11. THE CONTRACTOR SHALL BE REQUIRED TO RESTORE AREAS UTILIZED AS STAGING AREAS, MATERIALS/ EQUIPMENT STORAGE, FIELD OFFICE, ETC. DURING THE PROJECT'S CONSTRUCTION TO ITS ORIGINAL CONDITION. ALL COSTS SHALL BE INCIDENTAL TO ALL OF THE CONTRACT BID ITEMS.

12. ALL PORTABLE IMPACT ATTENUATORS PAID FOR UNDER ITEM 720555 SHALL BE LEFT IN PLACE AND BECOME THE PROPERTY OF THE T200809003 CONTRACTOR AT THE END OF THIS PROJECT. PRIOR TO THIS TRANSFER OF OWNERSHIP AND MAINTENANCE RESPONSIBILITY FROM THE T201009004 CONTRACTOR TO THE T200809003 CONTRACTOR, THE T201009004 CONTRACTOR SHALL PROVIDE WRITTEN CERTIFICATION FROM A CERTIFIED INSTALLER THAT EACH IMPACT ATTENUATOR HAS BEEN INSPECTED AND IS CRASH-WORTHY ACCORDING TO THE MANUFACTURER'S CURRENT SPECIFICATIONS. ONCE DELDOT HAS ACCEPTED THE CERTIFICATIONS IN WRITING, THE T200809003 CONTRACTOR SHALL ASSUME OWNERSHIP AND MAINTENANCE RESPONSIBILITY OF THESE PORTABLE IMPACT ATTENUATORS. ALL COSTS ASSOCIATED WITH SECURING THE CERTIFICATIONS SHALL BE INCLUDED IN THE UNIT PRICE BID FOR ITEM 720555, PORTABLE IMPACT ATTENUATOR.

13. ALL WARNING SIGNS PAID FOR UNDER ITEM 743544 SHALL BE LEFT IN PLACE AND BECOME THE PROPERTY OF THE T200809003 CONTRACTOR AT THE END OF THIS PROJECT.

14. ALL TEMPORARY BARRICADES, TYPE III PAID FOR UNDER ITEM 743524 SHALL BE LEFT IN PLACE AND BECOME THE PROPERTY OF THE T200809003 CONTRACTOR AT THE END OF THIS PROJECT.

15. ALL PLASTIC DRUMS PAID FOR UNDER ITEM 720558 SHALL BE LEFT IN PLACE AND BECOME THE PROPERTY OF THE T200809003 CONTRACTOR AT THE END OF THIS PROJECT.

16. ALL PORTABLE P.C.C. SAFETY BARRIER PAID FOR UNDER ITEM 720579 SHALL BE LEFT IN PLACE AND BECOME THE PROPERTY OF THE T200809003 CONTRACTOR AT THE END OF THIS PROJECT.

TRAFFIC CONTROL- I-95 BRIDGE REHABILITATION NOTES

1. A SITE SPECIFIC TRAFFIC CONTROL PLAN MUST BE SUBMITTED BY THE CONTRACTOR PRIOR TO COMMENCEMENT OF WORK FOR EACH BRIDGE REHABILITATION. COSTS FOR PREPARATION OF TRAFFIC CONTROL PLANS FOR EACH SITE SHALL BE INCLUDED IN THE BID PRICE FOR PAY ITEM 763500 (MAINTENANCE OF TRAFFIC). COSTS FOR ADJUSTMENTS IN POSITION OF ALL TRAFFIC CONTROL DEVICES DUE TO VARIANCES FROM STANDARD MUTCD CASE NUMBERS, OR FOR ANY OTHER REASONS, SHALL BE INCLUDED IN THE LUMP SUM BID PRICE FOR ITEM 763500.

   a. RECOMMENDED CASE NUMBERS ARE LISTED UNDER SITE SPECIFIC PROJECT NOTES FOR EACH BRIDGE LOCATION. THESE CASE NUMBERS ARE REFERENCING THE DELDOT TRAFFIC CONTROL MANUAL. THE CASE NUMBERS LISTED ARE RECOMMENDATIONS ONLY. THE CONTRACTOR SHALL BE RESPONSIBLE FOR DETERMINING THE APPLICABLE CASE NUMBER FOR EACH WORK APPLICATION. THE CONTRACTOR SHALL SUBMIT A TRAFFIC CONTROL PLAN FOR EACH BRIDGE SITE TO DELDOT FOR APPROVAL.

   b. THE TRAFFIC CONTROL PLAN MUST CLEARLY INDICATE ORIENTATION OF TRAFFIC CONTROL DEVICES TO BE USED FOR EACH SITE. THE PLAN MUST BE APPROVED BY DELDOT SAFETY OFFICER AND DELDOT PROJECT ENGINEER PRIOR TO COMMENCEMENT OF WORK ON EACH BRIDGE.

2. ALL REPAIR/MAINTENANCE EQUIPMENT SHALL BE REMOVED FROM THE BRIDGE REHABILITATION JOB SITES ON A DAILY BASIS, EXCEPT WHEN ALLOWED BY THE APPROVED TRAFFIC SAFETY PLAN, OR AS APPROVED BY THE ENGINEER.

3. THE CONTRACTOR SHALL PLACE 2 (TWO) CHANGEABLE MESSAGE BOARDS ON I-95 FOR EACH DECK MILL AND OVERLAY WORK LOCATION. DURING THE DAY MESSAGE BOARDS WILL BE USED TO INFORM ROADWAY USERS OF UPCOMING NIGHT WORK. DURING THE NIGHT MESSAGE BOARDS WILL BE USED TO WARN OF WORK ZONE AHEAD.

SEDIMENT & STORMWATER MANAGEMENT NOTES

1. AS-BUILT DRAWINGS. THE CONTRACTOR SHALL PROVIDE "AS-BUILT" DRAWINGS OF THE MALL POND STORMWATER MANAGEMENT FACILITY. THE "AS-BUILT" DRAWINGS SHALL SHOW THE ACTUAL FINISHED GROUND CONTOURS, OUTLET STRUCTURE DIMENSIONS AND ELEVATIONS, ETC., AS THEY EXIST AT THE COMPLETION OF THE PROJECT. THESE DRAWINGS SHALL BE SIGNED AND SEALED BY A PROFESSIONAL ENGINEER OR LAND SURVEYOR REGISTERED IN THE STATE OF DELAWARE AND SENT TO DELDOT STORM WATER ENGINEER. ALL COSTS SHALL BE INCLUDED UNDER ITEM 763501, CONSTRUCTION ENGINEERING.

2. DUST CONTROL. DUST IS TO BE CONTROLLED EXCLUSIVELY THROUGH THE USE OF WATER. COSTS ASSOCIATED WITH THE FURNISHING AND APPLICATION OF WATER FOR DUST CONTROL SHALL BE INCIDENTAL TO ALL THE CONTRACT BID ITEMS.

3. CONSTRUCTION ENTRANCES. IT IS INTENDED THAT MUD TRACKING BE ELIMINATED ON ALL STATE MAINTAINED ROADWAYS ADJOINING THE PROJECT. EACH POINT OF INGRESS AND EGRESS FROM THE PROJECT SHALL HAVE INSTALLED A STABILIZED CONSTRUCTION ENTRANCE (SCE), ITEM 268000. ALL PAVED SURFACES ADJOINING THE PROJECT BE LEFT IN A BROOM CLEAN CONDITION AT THE END OF EACH WORKDAY. STABILIZED CONSTRUCTION ENTRANCES SHALL BE WITH TWO (2) INCHES OF CLEAN DE NO. 3 STONES WHEN THE VOIDS BECOME CLOGGED OR AS DIRECTED BY THE ENGINEER. ADDITIONAL STONES REQUIRED TO MAINTAIN THE ENTRANCES SHALL BE PAID UNDER THE SAME ITEM NO. 268000.

4. SEDIMENT TRAPS. WHERE SHOWN IN THE PLANS OR AS DIRECTED BY THE ENGINEER, SEDIMENT TRAPS SHALL BE CONSTRUCTED BEFORE ANY STORMWATER DISCHARGES INTO WATERCOURSES. THE COST FOR INSTALLING SEDIMENT TRAPS SHALL BE PAID UNDER ITEM 255000. SEDIMENT TRAP OUTLET DEVICES SHALL BE PAID FOR SEPARATELY UNDER THE APPROPRIATE ITEMS. SEDIMENT TRAPS SHALL NOT BE EXCAVATED IN EXCESS OF 4 FEET DEEP. SEDIMENT TRAPS HAVING PROPOSED BOTTOM ELEVATIONS GREATER THAN 4 FEET LOWER THAN THE ORIGINAL GRADE SHALL BE EXCAVATED IN STAGES CONCURRENT WITH THE ROADWAY EXCAVATION.

5. SOIL STOCKPILES. STOCKPILES OF SOIL SHALL BE STABILIZED WITH ITEM 734017, TEMPORARY GRASS SEEDING, DRY GROUND AND MULCHED WITH ITEM 735006, MULCHING STRAW.

6. SEDIMENT REMOVAL. SILT FENCE, REINFORCED SILT FENCE, AND SEDIMENT CONTROL DIKES SHALL HAVE SEDIMENT REMOVED WHEN IT REACHES 50 PERCENT OF THE HEIGHT OF THE DIKE OR FENCE. SEDIMENT REMOVAL SHALL BE PAID FOR UNDER ITEM 250000, SEDIMENT REMOVAL. REMOVAL AND BACK FILLING OF TEMPORARY SEDIMENT CONTROLS WHEN THEY ARE NO LONGER NEEDED SHALL BE INCIDENTAL TO THEIR INITIAL CONSTRUCTION.

7. STORMWATER MANAGEMENT PONDS SERVING AS TEMPORARY SEDIMENT BASINS DURING CONSTRUCTION SHALL HAVE SEDIMENT REMOVED AT TIMES DETERMINED BY THE ENGINEER AND AT THE CONCLUSION OF THE PROJECT AFTER ALL AREAS DRAINING TO THE POND HAVE BEEN VEGETATIVELY STABILIZED. COST FOR SEDIMENT REMOVAL SHALL BE PAID FOR UNDER ITEM 250000, SEDIMENT REMOVAL. ACCESS SHALL BE MAINTAINED TO ALL SEDIMENT CONTROL DEVICES REQUIRING MAINTENANCE UNTIL CONSTRUCTION PHASING AND VEGETATIVE STABILIZATION ALLOW THE REMOVAL OF THOSE CONTROLS WHICH ARE NO LONGER REQUIRED.

TEMPORARY PAVEMENT MARKINGS LEGEND

SYMBOL	ITEM	QUANTITY
A	4" SOLID WHITE TEMPORARY PAVEMENT STRIPING, EPOXY RESIN PAINT (ITEM 748506)	1,704 LF
B	4" SOLID YELLOW TEMPORARY PAVEMENT STRIPING, EPOXY RESIN PAINT (ITEM 748506)	430 LF
C	4" SOLID DOUBLE YELLOW TEMPORARY PAVEMENT STRIPING, EPOXY RESIN PAINT (ITEM 748506)	640 LF
D	4" DASHED WHITE TEMPORARY PAVEMENT STRIPING, EPOXY RESIN PAINT, 2' LINE & 6' GAP (ITEM 748506)	30 LF
E	6" DASHED WHITE TEMPORARY PAVEMENT STRIPING, EPOXY RESIN PAINT, 10' LINE & 30' GAP (ITEM 748506)	165 LF
F	6" DASHED WHITE TEMPORARY PAVEMENT STRIPING, EPOXY RESIN PAINT, 2' LINE & 6' GAP (ITEM 748506)	95 LF
G	WHITE TEMPORARY PAINT PAVEMENT SYMBOL (ITEM 748026)	44 SF
H	6" SOLID WHITE TEMPORARY TAPE PAVEMENT STRIPING (ITEM 748526)	618 LF
J	6" SOLID YELLOW TEMPORARY TAPE PAVEMENT STRIPING (ITEM 748526)	637 LF
K	4" SOLID DOUBLE YELLOW TEMPORARY TAPE PAVEMENT STRIPING (ITEM 748525)	0 LF
L	4" DASHED WHITE TEMPORARY TAPE PAVEMENT STRIPING, 2' LINE & 6' GAP (ITEM 748525)	0 LF
M	4" DASHED WHITE TEMPORARY TAPE PAVEMENT STRIPING, 10' LINE & 30' GAP (ITEM 748525)	0 LF
N	4" DASHED YELLOW TEMPORARY TAPE PAVEMENT STRIPING, 10' LINE & 30' GAP (ITEM 748525)	0 LF
P	WHITE TEMPORARY TAPE PAVEMENT SYMBOL (ITEM 748527)	0 SF
O	6" BLACKOUT TAPE (ITEM 748518)	0 LF
R	REMOVAL OF PAVEMENT STRIPING (748530)	4,126 LF
S	8" BLACKOUT TAPE (ITEM 748528)	0 LF
T	6" SOLID WHITE TEMPORARY PAVEMENT STRIPING, EPOXY RESIN PAINT (ITEM 748507)	3,275 LF
U	6" SOLID YELLOW TEMPORARY PAVEMENT STRIPING, EPOXY RESIN PAINT (ITEM 748507)	2,598 LF

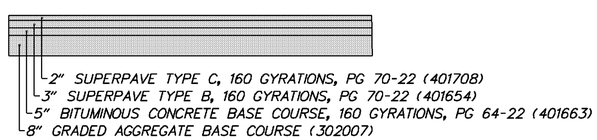

TEMPORARY FULL DEPTH PAVEMENT SECTION

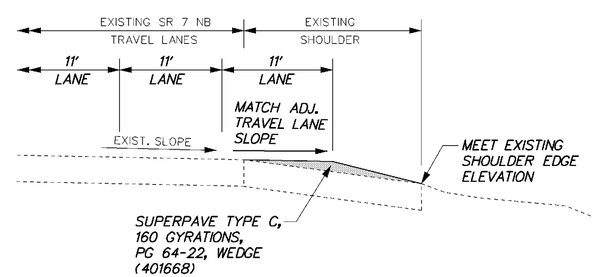

SR 7 NB WEDGE AND LEVEL PAVEMENT SECTION

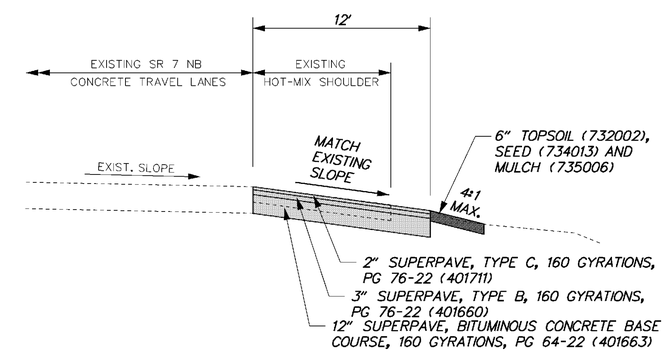

SR 7 NB FULL DEPTH SHOULDER REPLACEMENT PAVEMENT SECTION

10/7/2010 8:38:25 AM
M:\PROJECTS\2003\03059_DELTRNPK\SRTMALL\CADD\3009004\PLANS\CS03_RAMPR.DGN

DELAWARE DEPARTMENT OF TRANSPORTATION	ADDENDUMS / REVISIONS	NOT TO SCALE	SR1/I-95 INTERCHANGE - CHRISTIANA MALL ROAD BRIDGE	CONTRACT T201009004	BRIDGE NO. 1-223	CONSTRUCTION PHASING, M.O.T., AND EROSION CONTROL PLAN	SHEET NO. 118
				COUNTY NEW CASTLE	DESIGNED BY: RLS		TOTAL SHTS. 164
					CHECKED BY: NRB		

TRAFFIC RESTRICTIONS

1. THE MAXIMUM NUMBER OF NIGHTS THAT THE SOUTHBOUND SR 7 DETOUR PLAN 2 IS IMPLEMENTED SHALL NOT EXCEED 10 NIGHTS.
   THE MAXIMUM NUMBER OF NIGHTS THAT THE NORTHBOUND SR 7 DETOUR PLAN 1 IS IMPLEMENTED SHALL NOT EXCEED 10 NIGHTS.
   THE MAXIMUM NUMBER OF NIGHTS THAT DETOUR PLAN 8 IS IMPLEMENTED SHALL NOT EXCEED 50 NIGHTS.
   THE MAXIMUM NUMBER OF NIGHTS THAT DETOUR PLAN 6 IS IMPLEMENTED SHALL NOT EXCEED 25 NIGHTS.

2. RAMP CLOSURES OR DETOURS TO OR FROM THE MALL OR ROAD A SHALL NOT BE ALLOWED BETWEEN WEDNESDAY PRIOR TO THANKSGIVING AND JANUARY 3.

3. LANE OR RAMP CLOSURES AND DETOURS SHALL NOT BE PERMITTED DURING HOLIDAYS AND MAJOR EVENTS AS LISTED BELOW:
   - DECEMBER 24 THROUGH DECEMBER 27 (CHRISTMAS DAY)
   - DECEMBER 31 THROUGH JANUARY 3 (NEW YEARS DAY)
   - FRIDAY PRIOR TO EASTER THROUGH EASTER SUNDAY
   - THURSDAY PRIOR TO MEMORIAL DAY THROUGH THE TUESDAY FOLLOWING MEMORIAL DAY
   - DOVER INTERNATIONAL SPEEDWAY RACE WEEKENDS (THURSDAY PRIOR TO THE RACE EVENT THROUGH THE DAY AFTER THE RACE EVENT)
   - JULY 3 THROUGH JULY 5 (INDEPENDENCE DAY)
   - THURSDAY PRIOR TO LABOR DAY THROUGH THE TUESDAY FOLLOWING LABOR DAY
   - WEDNESDAY PRIOR TO THANKSGIVING DAY THROUGH THE MONDAY FOLLOWING THANKSGIVING DAY

4. STRUCTURAL STEEL ERECTION SHALL BE RESTRICTED TO NIGHTTIME CLOSURE HOURS ONLY.

5. CONSTRUCTION IMPACTING TRAVEL LANES ON THE MALL RING ROAD OR RAMPS PROVIDING ACCESS TO OR FROM I-95 AND/OR SR 1/7 AND THE MALL ARE NOT PERMITTED BEGINNING THE WEDNESDAY PRIOR TO THANKSGIVING THROUGH JANUARY 3.

6. THE FOLLOWING SCHEDULES INDICATE THE ALLOWABLE TIMES WHICH TRAFFIC ON SR 7 MAY BE DETOURED OR THE NUMBER OF LANES REDUCED. THE BEGIN SET-UP TO END TIMES ARE THE ENTIRE DURATION THAT LANE CLOSURES MAY BE IN EFFECT. THE END TIME REPRESENTS THE TIME AT WHICH ALL LANES OF TRAFFIC MUST BE FULLY OPERATIONAL.

SR 7 SUMMER TIME
MAY 15 THROUGH SEPTEMBER 15

SUMMER TIME PERIOD		NORTHBOUND		SOUTHBOUND	
		1 LANE OPEN: 1 LANE CLOSED	DETOURS *	1 LANE OPEN: 1 LANE CLOSED	DETOURS *
MONDAY PM THROUGH FRIDAY AM	BEGIN SETUP	10:00 PM	10:00 PM	11:00 PM	11:00 PM
	END	5:00 AM	5:00 AM	6:00 AM	6:00 AM
FRIDAY PM THROUGH SATURDAY AM	BEGIN SETUP	NOT ALLOWED	NOT ALLOWED	NOT ALLOWED	NOT ALLOWED
	END				
SATURDAY PM THROUGH SUNDAY AM	BEGIN SETUP				
	END				
SUNDAY PM THROUGH MONDAY AM	BEGIN SETUP				
	END				

* INCLUDES DETOURS FOR OVERHEAD SIGN REMOVAL/INSTALLATION, RELOCATION OF HIGH MAST LIGHT, STEEL ERECTION FOR BRIDGE WORK, AND BRIDGE REHABILITATION WORK.

SR 7 NON-SUMMER TIME
SEPTEMBER 16 THROUGH MAY 14

NON-SUMMER TIME PERIOD		NORTHBOUND		SOUTHBOUND	
		1 LANE OPEN: 1 LANE CLOSED	DETOURS *	1 LANE OPEN: 1 LANE CLOSED	DETOURS *
MONDAY PM THROUGH FRIDAY AM	BEGIN SETUP	9:00 PM	9:00 PM	10:00 PM	10:00 PM
	END	5:00 AM	5:00 AM	6:00 AM	6:00 AM
FRIDAY PM THROUGH SATURDAY AM	BEGIN SETUP	11:00 PM	11:00 PM	12:00 MID	12:00 MID
	END	8:00 AM	8:00 AM	7:00 AM	7:00 AM
SATURDAY PM THROUGH SUNDAY AM	BEGIN SETUP	11:00 PM	11:00 PM	10:00 PM	10:00 PM
	END	9:00 AM	9:00 AM	9:00 AM	9:00 AM
SUNDAY PM THROUGH MONDAY AM	BEGIN SETUP	11:00 PM	11:00 PM	10:00 PM	10:00 PM
	END	5:00 AM	5:00 AM	6:00 AM	6:00 AM

* INCLUDES DETOURS FOR OVERHEAD SIGN REMOVAL/INSTALLATION, RELOCATION OF HIGH MAST LIGHT, STEEL ERECTION FOR BRIDGE WORK, AND BRIDGE REHABILITATION WORK.

7. THE FOLLOWING SCHEDULES INDICATE THE ALLOWABLE TIMES WHICH TRAFFIC ON I-95 MAY BE DETOURED OR THE NUMBER OF LANES REDUCED. THE BEGIN SET-UP TO END TIMES ARE THE ENTIRE DURATION THAT LANE CLOSURES MAY BE IN EFFECT. THE END TIME REPRESENTS THE TIME AT WHICH ALL LANES OF TRAFFIC MUST BE FULLY OPERATIONAL.

I-95 SUMMER TIME
MAY 15 THROUGH SEPTEMBER 15

SUMMER TIME PERIOD		3 LANES OPEN: 1 LANE CLOSED	2 LANES OPEN: 2 LANES CLOSED	1 LANE OPEN: 3 LANES CLOSED	DETOURS *
MONDAY PM THROUGH FRIDAY AM	BEGIN SETUP	9:00 PM	10:00 PM	12:00 MID	12:00 MID
	END	5:00 AM	5:00 AM	5:00 AM	5:00 AM
FRIDAY PM THROUGH SATURDAY AM	BEGIN SETUP	10:00 PM	12:00 MID	NOT ALLOWED	NOT ALLOWED
	END	8:00 AM	6:00 AM		
SATURDAY PM THROUGH SUNDAY AM	BEGIN SETUP	8:00 PM	10:00 PM		
	END	8:00 AM	7:00 AM		
SUNDAY PM THROUGH MONDAY AM	BEGIN SETUP	9:00 PM	11:00 PM		
	END	5:00 AM	5:00 AM		

* INCLUDES DETOURS FOR BRIDGE REHABILITATION WORK.

I-95 NON-SUMMER TIME
SEPTEMBER 16 THROUGH MAY 14

NON-SUMMER TIME PERIOD		3 LANES OPEN: 1 LANE CLOSED	2 LANES OPEN: 2 LANES CLOSED	1 LANE OPEN: 3 LANES CLOSED	DETOURS *
MONDAY PM THROUGH FRIDAY AM	BEGIN SETUP	7:00 PM	9:00 PM	11:00 PM	11:00 PM
	END	5:00 AM	5:00 AM	5:00 AM	5:00 AM
FRIDAY PM THROUGH SATURDAY AM	BEGIN SETUP	9:00 PM	10:00 PM	12:00 MID	12:00 MID
	END	9:00 AM	7:00 AM	6:00 AM	6:00 AM
SATURDAY PM THROUGH SUNDAY AM	BEGIN SETUP	7:00 PM	10:00 PM	12:00 MID	12:00 MID
	END	10:00 AM	9:00 AM	7:00 AM	7:00 AM
SUNDAY PM THROUGH MONDAY AM	BEGIN SETUP	8:00 PM	10:00 PM	12:00 MID	12:00 MID
	END	5:00 AM	5:00 AM	5:00 AM	5:00 AM

* INCLUDES DETOURS FOR BRIDGE REHABILITATION WORK.

CONSTRUCTION PHASING LEGEND

- WORK AREA THIS PHASE
- TEMPORARY FULL DEPTH PAVEMENT THIS PHASE
- TEMPORARY FULL DEPTH PAVEMENT PREVIOUSLY CONSTRUCTED
- TEMPORARY WEDGE AND LEVEL PAVEMENT
- TRAFFIC PATTERN OUTSIDE WORK ZONE
- TRAFFIC PATTERN WITHIN WORK ZONE

SEQUENCE OF CONSTRUCTION PHASE 1

1. PLACE ALL PERMANENT WARNING SIGNS AS SHOWN ON THE ADVANCED WARNING SIGN PLAN, AND INSTALL AND COVER RAMP R AND NORTHBOUND AND SOUTHBOUND SR 7 DETOUR SIGNING AS SHOWN ON THE DETOUR PLANS.
2. INSTALL EROSION AND SEDIMENT CONTROL DEVICES AS SHOWN.
3. UTILIZING CASE 5, INSTALL PORTABLE P.C.C. SAFETY BARRIER TO CLOSE RIGHTMOST SOUTHBOUND SR 7 LANE SOUTH OF EXISTING CHRISTIANA MALL ROAD BRIDGE TO RESTRICT EXISTING MALL RAMP TO ONE LANE.
4. UTILIZING RAMP R DETOUR AT NIGHT, INSTALL PORTABLE P.C.C. SAFETY BARRIER ON BOTH SIDES OF RAMP R TO RESTRICT EXISTING MALL RAMP TO ONE LANE.
5. UTILIZING CASE 6, INSTALL TEMPORARY STRIPING AND P.C.C. BARRIER ON ROAD A.
6. UTILIZING CASE 2, CONSTRUCT TRAFFIC SIGNAL AT RAMP G1 & ROAD A.
7. UTILIZING SR 7 DETOURS AT NIGHT, REMOVE OVERHEAD SIGN STRUCTURES AND LIGHT POLES IN CONFLICT WITH THE PROPOSED BRIDGE CONSTRUCTION. INSTALL GM-1 WITH THE RELOCATED SIGN PANEL CONCURRENTLY.
8. INSTALL TEMPORARY LIGHTING CONDUIT TO KEEP EXISTING LIGHTING ENERGIZED THROUGHOUT CONSTRUCTION.
9. AFTER CLOSING THE RAMP FROM THE MALL, CONSTRUCT WEDGE AND LEVEL ON EXISTING SHOULDER, STA. 1264+15 TO STA. 1260+65. THIS WORK SHALL BE DONE DURING NIGHT TIME HOURS TO MINIMIZE IMPACTS TO THE MALL TRAFFIC. BOTH LANES OF NB SR7 SHALL REMAIN OPERATIONAL DURING THIS WORK.
10. ESTABLISH SOIL STOCKPILE AREAS, INCLUDING EROSION AND SEDIMENT CONTROL MEASURES. SEE SOIL STOCKPILE GRADING PLANS FOR MORE INFORMATION.
11. UTILIZING CASE 4, CONSTRUCT RIP-RAP SOUTH OF ROAD A.
12. INSTALL ANTI-SEEP BARRIER NORTH OF ROAD A.
13. UPON COMPLETION OF ANTI-SEEP BARRIER, COMMENCE POND #533 CONSTRUCTION, INCLUDING OUTFALL PIPES AND PIPE BORING UNDER EXISTING MALL RAMP, THEN POND #534 CONSTRUCTION.
14. WHILE MAINTAINING ONE LANE OF TRAFFIC ON THE EXISTING MALL RAMP, CONSTRUCT EMBANKMENT FOR RAMPS R1 AND G1 OUTSIDE OF THE EXISTING MALL RAMP LIMITS TO PROPOSED SUB-GRADE ELEVATION.
15. INSTALL RAMP G1 DRAINAGE AND PLATE OVER ANY MEDIAN DRAINAGE STRUCTURES THAT MAY BE DRIVEN ON DURING SUBSEQUENT MAINTENANCE OF TRAFFIC PHASES.
16. CONSTRUCT SHEET PILE WALL EAST OF SR 7.
17. UPON COMPLETION OF SHEET PILE WALL INSTALLATION, REGRADE MALL POND TO PROVIDE WORK AREA FOR EAST ABUTMENT CONSTRUCTION. SEE SWM PLANS FOR POND CONSTRUCTION SEQUENCES.
18. COMMENCE WEST ABUTMENT CONSTRUCTION.
19. STABILIZE AREA IN ACCORDANCE WITH THE DELAWARE STANDARD SPECIFICATIONS AND REMOVE ALL TRAFFIC AND SEDIMENT CONTROL DEVICES NOT REQUIRED FOR FUTURE CONSTRUCTION PHASES.

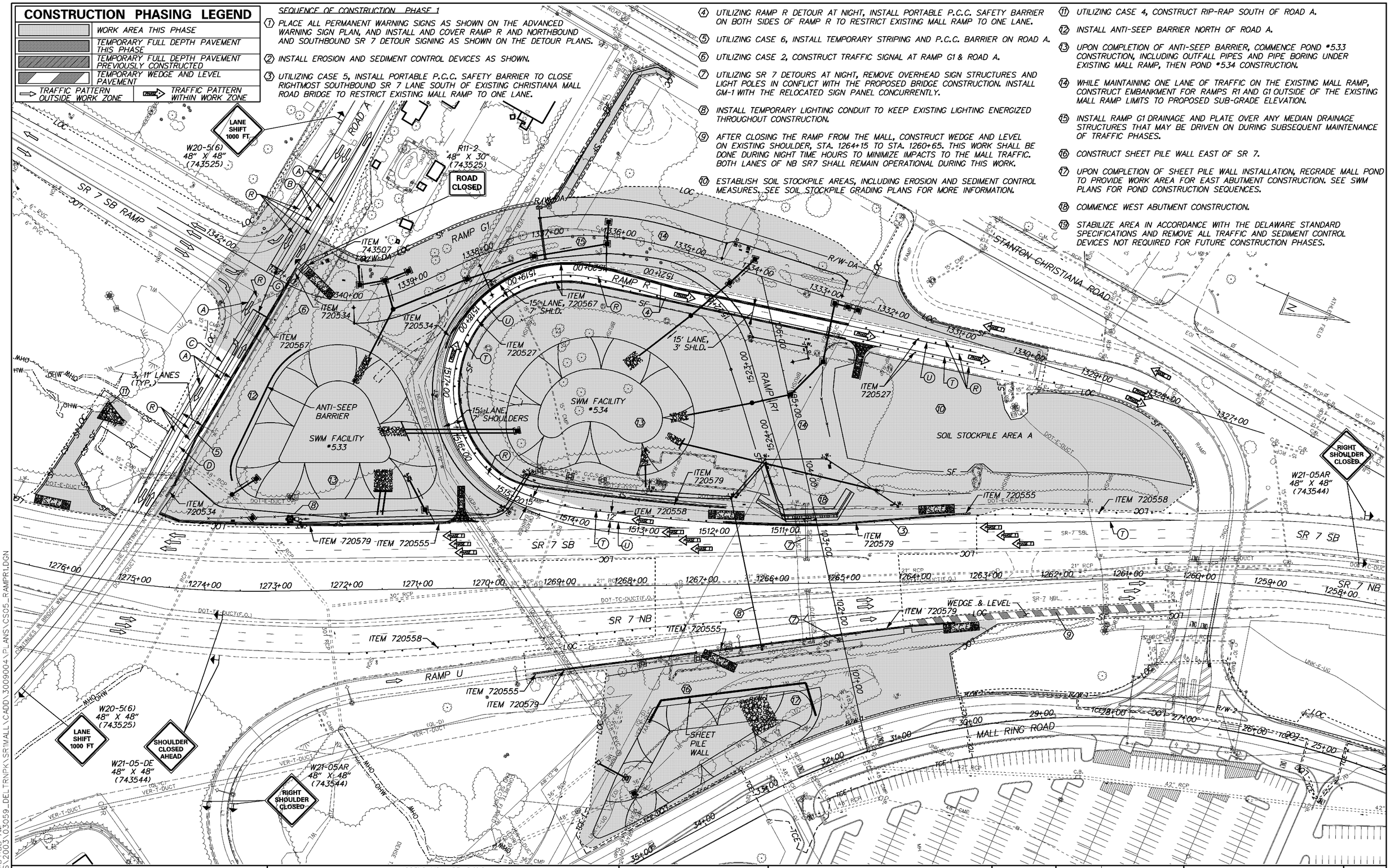

DELAWARE DEPARTMENT OF TRANSPORTATION	ADDENDUMS / REVISIONS	SCALE 0 60 120 180 FEET	SR1/I-95 INTERCHANGE – CHRISTIANA MALL ROAD BRIDGE	CONTRACT T201009004	BRIDGE NO. 1-223	CONSTRUCTION PHASING, MOT AND EROSION CONTROL PHASE 1	SHEET NO. 120
				COUNTY NEW CASTLE	DESIGNED BY: JLO		TOTAL SHTS. 164
					CHECKED BY: RLS		

10/8/2010 11:54:58 AM
M:\PROJECTS\2003\03059_DELTRNPK\SR1MALL\CADD\3009004\PLANS\CS05_RAMPR1.DGN

CONSTRUCTION PHASING LEGEND

- WORK AREA THIS PHASE
- TEMPORARY FULL DEPTH PAVEMENT THIS PHASE
- TEMPORARY FULL DEPTH PAVEMENT PREVIOUSLY CONSTRUCTED
- TEMPORARY WEDGE AND LEVEL PAVEMENT
- TRAFFIC PATTERN OUTSIDE WORK ZONE
- TRAFFIC PATTERN WITHIN WORK ZONE

SEQUENCE OF CONSTRUCTION PHASE 2

1. INSTALL EROSION AND SEDIMENT CONTROL DEVICES AS SHOWN.
2. UTILIZING CASE 5, INSTALL TEMPORARY STRIPING AND PORTABLE P.C.C. BARRIER TO SHIFT TRAFFIC TO ALLOW SR 7 MEDIAN PIER CONSTRUCTION.
3. COMMENCE CONSTRUCTION OF SR 7 MEDIAN PIER AND EAST ABUTMENT.
4. BUILD TEMPORARY CROSSOVER FROM STA. 1518+00 TO STA. 1519+32, AND PROTECT DRAINAGE INLET PREVIOUSLY CONSTRUCTED IN PHASE 1. BUILD TEMPORARY TIE-IN AT STA. 1332+40 TO STA. 1331+00.
6. INSTALL CURBS AND DRAINAGE INLET TOPS ALONG RAMP G1 EXCEPT FOR TEMPORARY CROSSOVER AREA.
7. FINE GRADE RAMPS G1, R1 AND TEMPORARY CROSSOVER AND TEMPORARY TIE-IN FROM EXISTING MALL ROAD TO RAMP G1.
8. CONSTRUCT PAVEMENT TO TYPE B ELEVATION ALONG RAMPS G1, R1 & TEMPORARY CROSSOVER. CONSTRUCT TO MAINTAIN POSITIVE DRAINAGE.

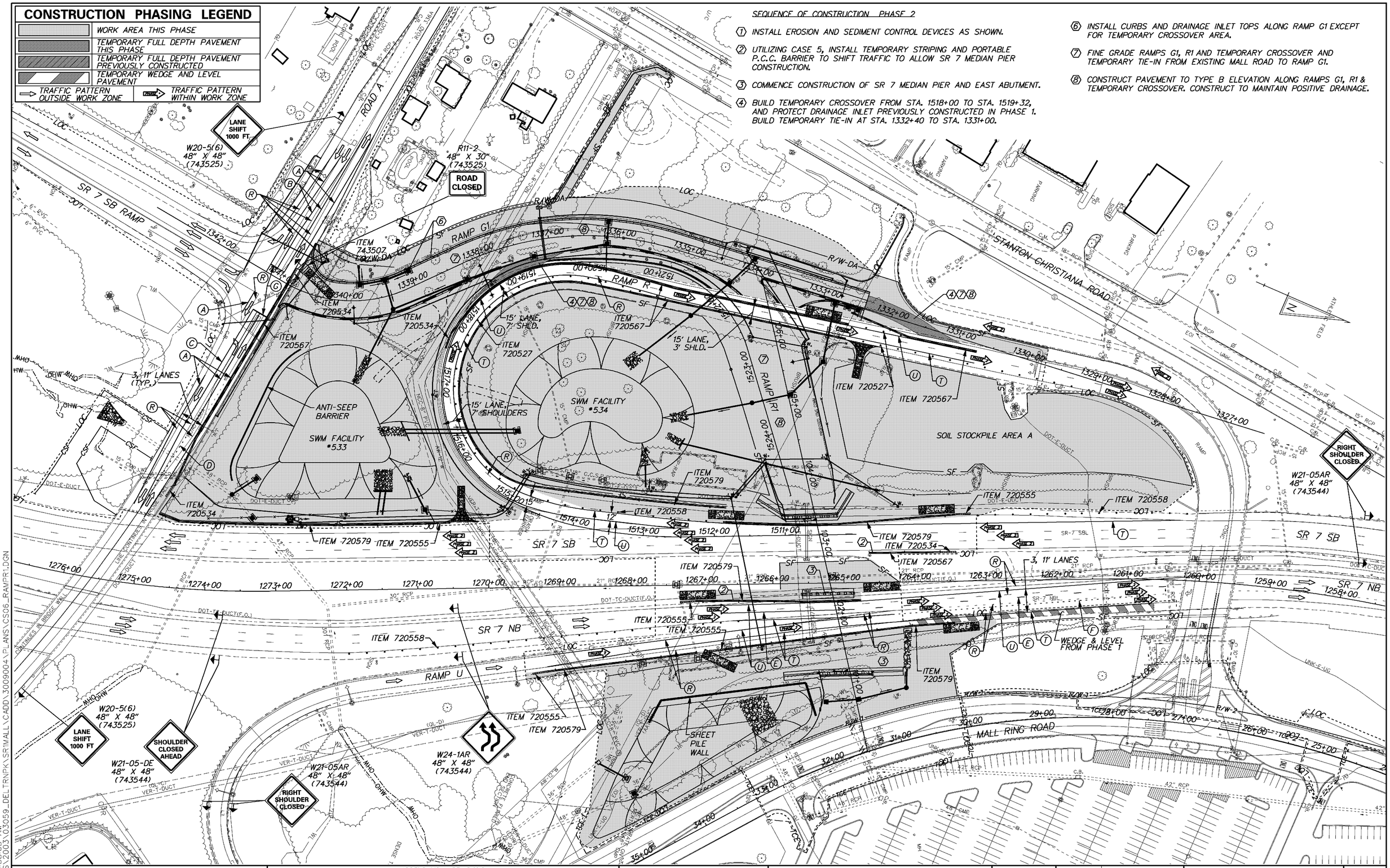

10/8/2010 11:58:05 AM
M:\PROJECTS\2003\03059_DELTRNPK\SR1MALL\CADD\3009004\PLANS\CS06_RAMPR1.DGN

DELAWARE DEPARTMENT OF TRANSPORTATION	ADDENDUMS / REVISIONS	SCALE 0 60 120 180 FEET	SR1/I-95 INTERCHANGE – CHRISTIANA MALL ROAD BRIDGE	CONTRACT T201009004	BRIDGE NO. 1-223	CONSTRUCTION PHASING, MOT AND EROSION CONTROL PHASE 2	SHEET NO. 121
				COUNTY NEW CASTLE	DESIGNED BY: JLO		TOTAL SHTS. 164
					CHECKED BY: RLS		

CONSTRUCTION PHASING LEGEND

- WORK AREA THIS PHASE
- TEMPORARY FULL DEPTH PAVEMENT THIS PHASE
- TEMPORARY FULL DEPTH PAVEMENT PREVIOUSLY CONSTRUCTED
- TEMPORARY WEDGE AND LEVEL PAVEMENT
- TRAFFIC PATTERN OUTSIDE WORK ZONE
- TRAFFIC PATTERN WITHIN WORK ZONE

SEQUENCE OF CONSTRUCTION PHASE 3

1. INSTALL EROSION AND SEDIMENT CONTROL AND TRAFFIC CONTROL DEVICES AS SHOWN.
2. SHIFT MALL TRAFFIC USING CROSSOVER TO RAMP G1, CLOSE RAMP R TO TRAFFIC.
3. CONSTRUCT RAMP R STA. 1519+75 AHEAD AND RAMP R & RAMP R1 INTERSECTION. PAVE TO TYPE B HOT-MIX ELEVATION.
4. CONSTRUCT BRIDGE OVER SR7 TO SUPERSTRUCTURE. USE DETOUR PLANS TO CLOSE NB SR7 & SB SR7.
5. CONSTRUCT BRIDGE DECK USING DECK POURING SEQUENCE.
6. UTILIZING CASE 7, CONSTRUCT BRIDGE APPROACH FROM RAMP R1 & MALL RING ROAD, AND MALL RING ROAD IMPROVEMENTS. CONNECTION TO MALL RING ROAD SHALL BE MADE DURING NIGHT TIME HOURS USING FLAGGERS.
7. COMPLETE GRADING, SEED & MULCH AT RAMPS R1, G1 & R.
8. UTILIZING FLAGGERS AT NIGHT, CONSTRUCT SIGNAL AT INTERSECTION OF RAMP R1 AND MALL RING ROAD. COVER SIGNAL HEADS UNTIL PHASE 4.
9. PERFORM STABILIZATION OF SOIL STOCKPILE AREA ACCORDING TO DELAWARE STANDARDS.
10. UTILIZING CASE 6, REMOVE BARRIER AND TEMPORARY STRIPING ALONG ROAD A, AND INSTALL PERMANENT STRIPING ALONG ROAD A AND SB SR7 RAMP. INSTALL TYPE III BARRICADES AS SHOWN ON RAMP G1.
11. AS A LAST ORDER OF WORK IN PHASE 3, UTILIZING DETOUR PLAN 3, CLOSE RAMP R, REMOVE TEMPORARY CROSSOVER AND CONSTRUCT REMAINING FULL DEPTH PAVEMENT AND P.C.C. BARRIER. CONSTRUCT MILL & OVERLAY AND TYPE C PAVEMENT TO MALL RING ROAD. INSTALL PERMANENT STRIPING.

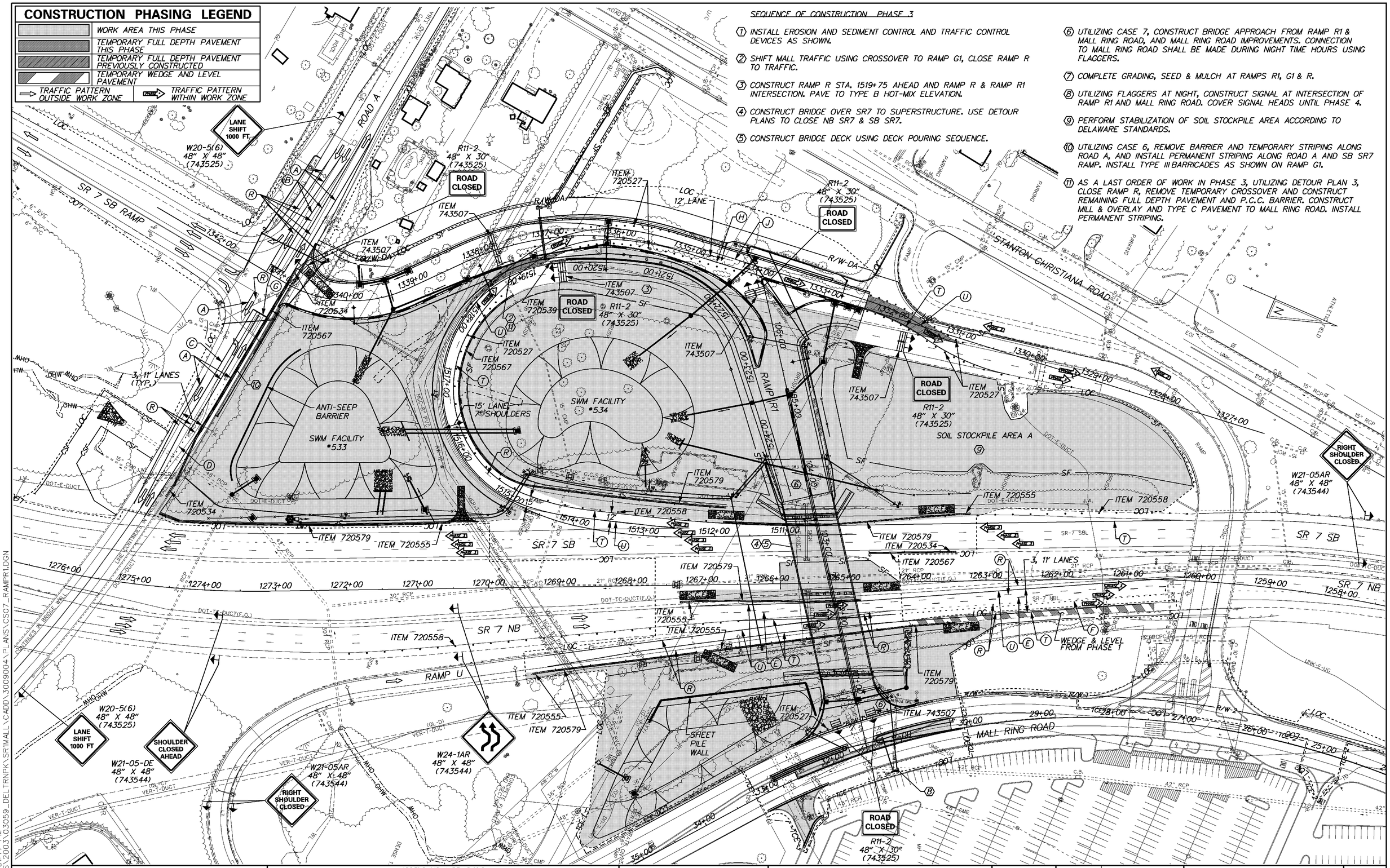

DELAWARE DEPARTMENT OF TRANSPORTATION	ADDENDUMS / REVISIONS	SCALE 0 60 120 180 FEET	SR1/I-95 INTERCHANGE – CHRISTIANA MALL ROAD BRIDGE	CONTRACT T201009004	BRIDGE NO. 1-223	CONSTRUCTION PHASING, MOT AND EROSION CONTROL PHASE 3	SHEET NO. 122
				COUNTY NEW CASTLE	DESIGNED BY: JLO		TOTAL SHTS. 164
					CHECKED BY: RLS		

10/8/2010 1:01:47 PM
M:\PROJECTS\2003\03059_DELTRNPK\SR1MALL\CADD\3009004\PLANS\CS07_RAMPR1.DGN

CONSTRUCTION PHASING LEGEND

(light shading)	WORK AREA THIS PHASE
(dark shading)	TEMPORARY FULL DEPTH PAVEMENT THIS PHASE
(dark hatched shading)	TEMPORARY FULL DEPTH PAVEMENT PREVIOUSLY CONSTRUCTED
(striped shading)	TEMPORARY WEDGE AND LEVEL PAVEMENT
⇨ TRAFFIC PATTERN OUTSIDE WORK ZONE	PHASE ⇨ TRAFFIC PATTERN WITHIN WORK ZONE

SEQUENCE OF CONSTRUCTION PHASE 4

1. INSTALL EROSION & SEDIMENT CONTROL DEVICES AS SHOWN.
2. INSTALL TRAFFIC CONTROL DEVICES AS SHOWN.
3. MODIFY PHASING OF EXISTING MALL RING ROAD TRAFFIC SIGNAL TO ELIMINATE UNNECESSARY PHASES. ENERGIZE NEW MALL RING ROAD TRAFFIC SIGNAL.
4. SHIFT IN-BOUND MALL TRAFFIC TO NEW RAMP R1. MAINTAIN CURRENT EXITING MALL TRAFFIC PATTERN.
5. REMOVE RAMP R TO RAMP G1 TEMPORARY CROSS-OVER PAVEMENT, INSTALL REMAINDER OF RAMP G1 CURB.
6. INSTALL TYPE C PAVING ALONG RAMP G1 & RAMP R1 OUTBOUND LANES.
7. STRIPE RAMP G1 AND RAMP R1 OUTBOUND UNDER EXISTING CLOSURE.

SCALE 0 60 120 180 FEET

10/8/2010 12:35:09 PM
M:\PROJECTS\2003\03059_DELTRNPK\SR1MALL\CADD\3009004\PLANS\CS08_RAMPR1.DGN

DELAWARE DEPARTMENT OF TRANSPORTATION

ADDENDUMS / REVISIONS

SR1/I-95 INTERCHANGE - CHRISTIANA MALL ROAD BRIDGE

CONTRACT	T201009004	BRIDGE NO.	1-223
COUNTY	NEW CASTLE	DESIGNED BY:	JLO
		CHECKED BY:	RLS

CONSTRUCTION PHASING, MOT AND EROSION CONTROL PHASE 4

SHEET NO. 123
TOTAL SHTS. 164

CONSTRUCTION PHASING LEGEND

- WORK AREA THIS PHASE
- TEMPORARY FULL DEPTH PAVEMENT THIS PHASE
- TEMPORARY FULL DEPTH PAVEMENT PREVIOUSLY CONSTRUCTED
- TEMPORARY WEDGE AND LEVEL PAVEMENT
- TRAFFIC PATTERN OUTSIDE WORK ZONE
- TRAFFIC PATTERN WITHIN WORK ZONE

SEQUENCE OF CONSTRUCTION PHASE 5

1. INSTALL EROSION & SEDIMENT CONTROL DEVICES AS SHOWN.
2. INSTALL TRAFFIC CONTROL DEVICES AS SHOWN.
3. REROUTE EXITING MALL TRAFFIC TO OUTBOUND RAMP R1.
4. OPEN ROAD A AND RAMP G1 INTERSECTION TO TRAFFIC.
5. TAKE EXISTING MALL ACCESS OUT OF SERVICE. REMOVE PAVING FROM BRIDGE ABUTMENT TO MALL RING ROAD. NOTE: THE CONTRACTOR SHALL PROVIDE A 4:1 WEDGE AT THE END OF EACH WORK DAY TO ELIMINATE DROPOFF CONDITION.
6. INSTALL HOT-MIX & GUARDRAIL ALONG MALL RING ROAD AS SHOWN ON THE PLANS.
7. TOPSOIL, SEED AND MULCH AREA.
8. UTILIZING CASE 7 DURING NIGHT TIME HOURS TO MINIMIZE IMPACTS TO MALL TRAFFIC, CONSTRUCT IMPROVEMENTS. NOTE: THE CONTRACTOR SHALL ONLY BE PERMITTED TO EXCAVATE WHAT CAN BE RECONSTRUCTED IN ONE WORKING NIGHT.
9. WITH THE EXCEPTION OF THE TRAFFIC CONTROL DEVICES SHOWN ON MALL RING ROAD, THE CONTRACTOR SHALL LEAVE THE PORTABLE P.C.C. SAFETY BARRIER, PORTABLE IMPACT ATTENUATORS, PLASTIC DRUMS, WARNING SIGNS AND TYPE 3 BARRICADES SHOWN IN THIS PHASE. THE PORTABLE P.C.C. SAFETY BARRIER, PORTABLE IMPACT ATTENUATORS, PLASTIC DRUMS, WARNING SIGNS AND TYPE 3 BARRICADES SHALL BECOME THE PROPERTY OF THE T200809003 CONTRACTOR AT THE END OF THE PROJECT.
10. THE CONTRACTOR SHALL LEAVE THE SILT FENCE AROUND THE PERIMETER OF THE SOIL STOCKPILE AREA FOR USE IN FUTURE CONTRACT. ALL OTHER SILT FENCE SHALL BE REMOVED AT THE END OF THE PROJECT. THE STABILIZED CONSTRUCTION ENTRANCES & INLET PROTECTION IN THIS PHASE SHALL REMAIN FOR FUTURE USE. CLEAN ALL EROSION CONTROLS OF SEDIMENT.
11. INSTALL SIDEWALK ALONG EASTBOUND ROAD A UTILIZING CASES 3 AND 7. INSTALL PEDESTRIAN SIGNAL IMPROVEMENTS AND CURB RAMPS AT THE STANTON CHRISTIANA ROAD/ROAD A INTERSECTION UTILIZING CASE 7. THE CONTRACTOR SHALL MAINTAIN BUS AND PEDESTRIAN ACCESS TO THE BUS STOP DURING THE HOURS OF BUS OPERATION.

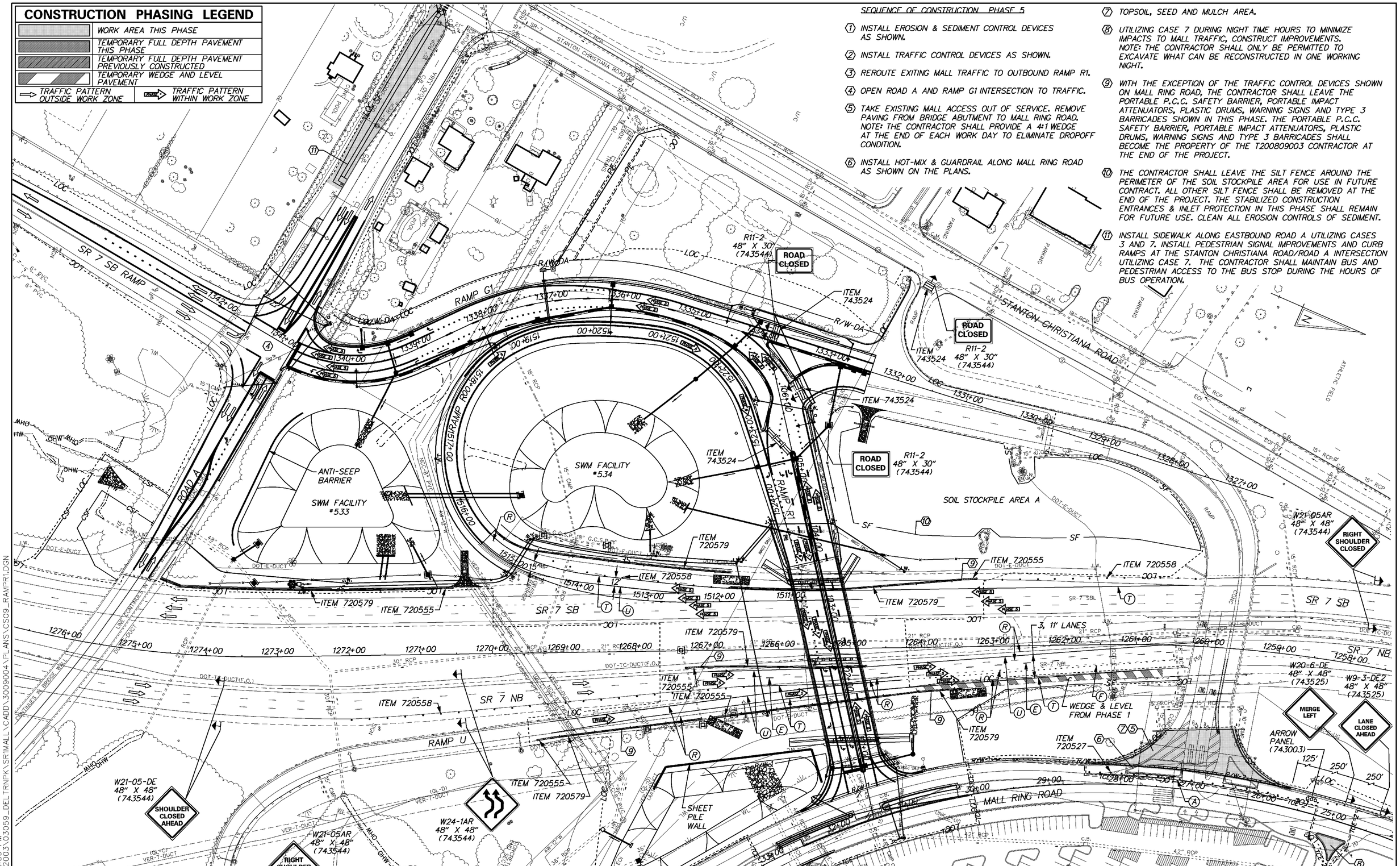

10/8/2010 1:05:09 PM
M:\PROJECTS\2003\03059_DELTRNPK\SR1WALL\CADD\3009004\PLANS\CS09_RAMPR1.DGN

DELAWARE DEPARTMENT OF TRANSPORTATION	ADDENDUMS / REVISIONS	SCALE 0 60 120 180 FEET	SR1/I-95 INTERCHANGE - CHRISTIANA MALL ROAD BRIDGE	CONTRACT T201009004	BRIDGE NO. 1-223
				COUNTY NEW CASTLE	DESIGNED BY: JLO
					CHECKED BY: RLS

CONSTRUCTION PHASING, MOT AND EROSION CONTROL PHASE 5

SHEET NO. 124
TOTAL SHTS. 164

CONSTRUCTION PHASING LEGEND

- WORK AREA THIS PHASE
- TEMPORARY FULL DEPTH PAVEMENT THIS PHASE
- TEMPORARY FULL DEPTH PAVEMENT PREVIOUSLY CONSTRUCTED
- TEMPORARY WEDGE AND LEVEL PAVEMENT
- TRAFFIC PATTERN OUTSIDE WORK ZONE
- TRAFFIC PATTERN WITHIN WORK ZONE

SEQUENCE OF CONSTRUCTION PHASE 6
BRIDGE PAINTING AND REPAIRS

NOTE: THIS WORK SHALL BE DONE CONCURRENTLY WITH ALL OTHER WORK IN THIS CONTRACT, INCLUDING I-95 BRIDGE DECK MILL AND OVERLAY. SEE BRIDGE REHABILITATION SHEETS FOR MORE INFORMATION.

1. UTILIZING CASE 7 AND PARTIAL DETOUR PLAN 4 AT NIGHT, CONSTRUCT TEMPORARY FULL DEPTH PAVEMENT SHOULDER REPLACEMENT ALONG SR7 NORTHBOUND.

2. UTILIZING CASES 3, 7, 13, THE MOT CONFIGURATION SHOWN ON THIS SHEET, PARTIAL DETOUR PLAN 4, AND/OR DETOUR PLAN 6 AT NIGHT, PERFORM BRIDGE PAINTING AND REPAIRS FOR BRIDGES 1-717, 1-716, AND 1-716A ON THE SR7 NORTHBOUND SIDE. PRIOR TO REOPENING ALL SR7 NORTHBOUND LANES, SHOULDERS, AND RAMPS FOLLOWING A WORK SHIFT PER THE SCHEDULES ON SHEET 119, THE PAINTING CONTAINMENT SYSTEM MUST BE RAISED ABOVE THE BOTTOM OF ALL GIRDERS DUE TO THE MINIMAL EXISTING VERTICAL CLEARANCE.

3. UTILIZING CASES 3, 7, 13, DETOUR PLAN 7, AND/OR DETOUR PLAN 8 AT NIGHT, PERFORM BRIDGE PAINTING AND REPAIRS FOR BRIDGES 1-717, 1-716, AND 1-716A ON THE SR7 SOUTHBOUND SIDE PER THE SCHEDULES ON SHEET 119. IF A MINIMUM 15 FOOT VERTICAL CLEARANCE CAN BE MAINTAINED AT ALL TIMES, THE PAINTING CONTAINMENT SYSTEM MAY REMAIN IN PLACE AND WORK MAY PROCEED OVER LIVE TRAFFIC, IF APPROVED BY THE ENGINEER.

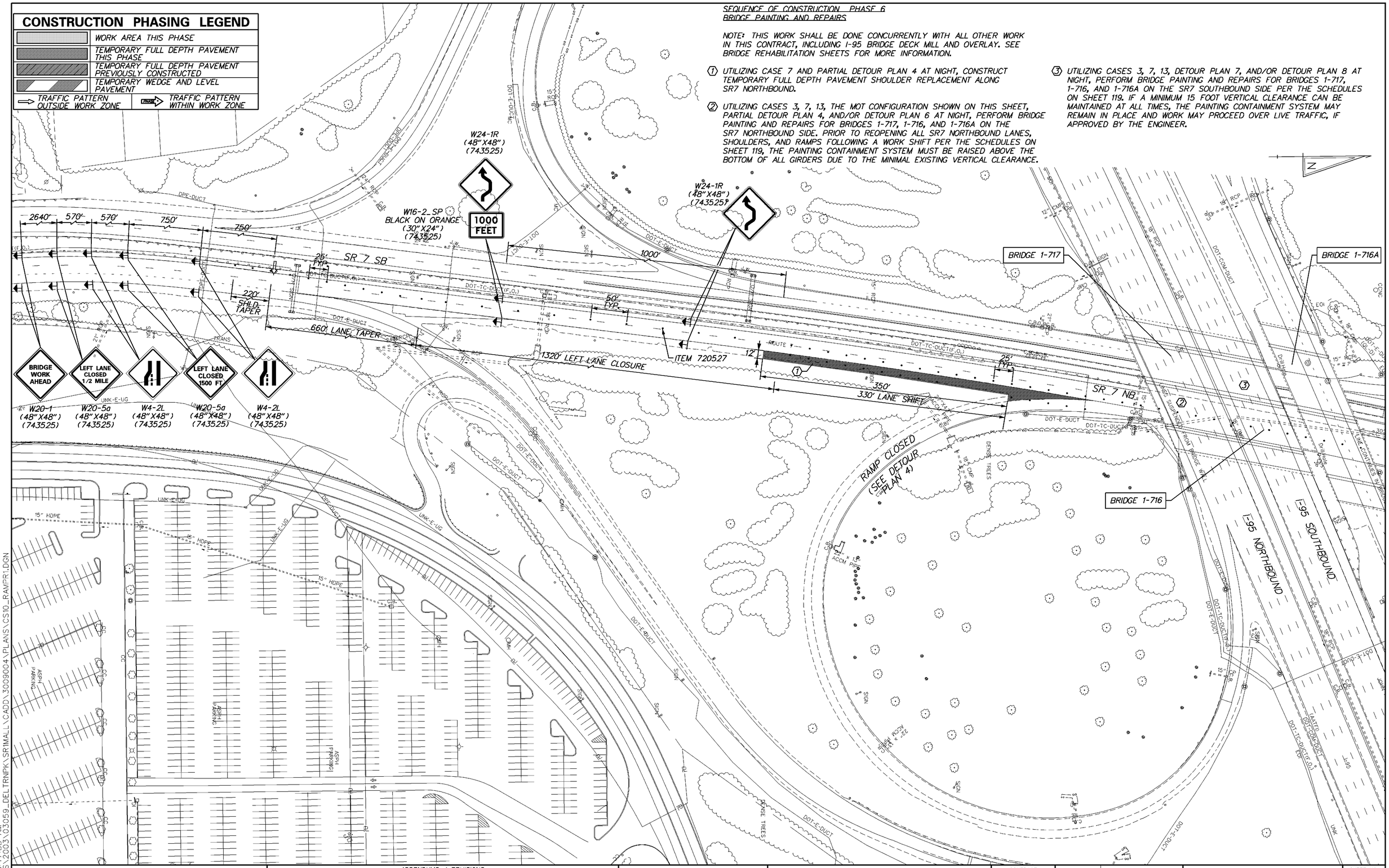

10/8/2010 11:47:33 AM
M:\PROJECTS\2003\03059_DELTRNPK\SR1MALL\CADD\3009004\PLANS\CS10_RAMPR1.DGN

DELAWARE DEPARTMENT OF TRANSPORTATION

ADDENDUMS / REVISIONS

SCALE 0 60 120 180 FEET

SR1/I-95 INTERCHANGE - CHRISTIANA MALL ROAD BRIDGE

CONTRACT	BRIDGE NO.	1-223
T201009004	DESIGNED BY:	JLO
COUNTY		
NEW CASTLE	CHECKED BY:	RLS

CONSTRUCTION PHASING, MOT AND EROSION CONTROL PHASE 6

SHEET NO. 124A
TOTAL SHTS. 164

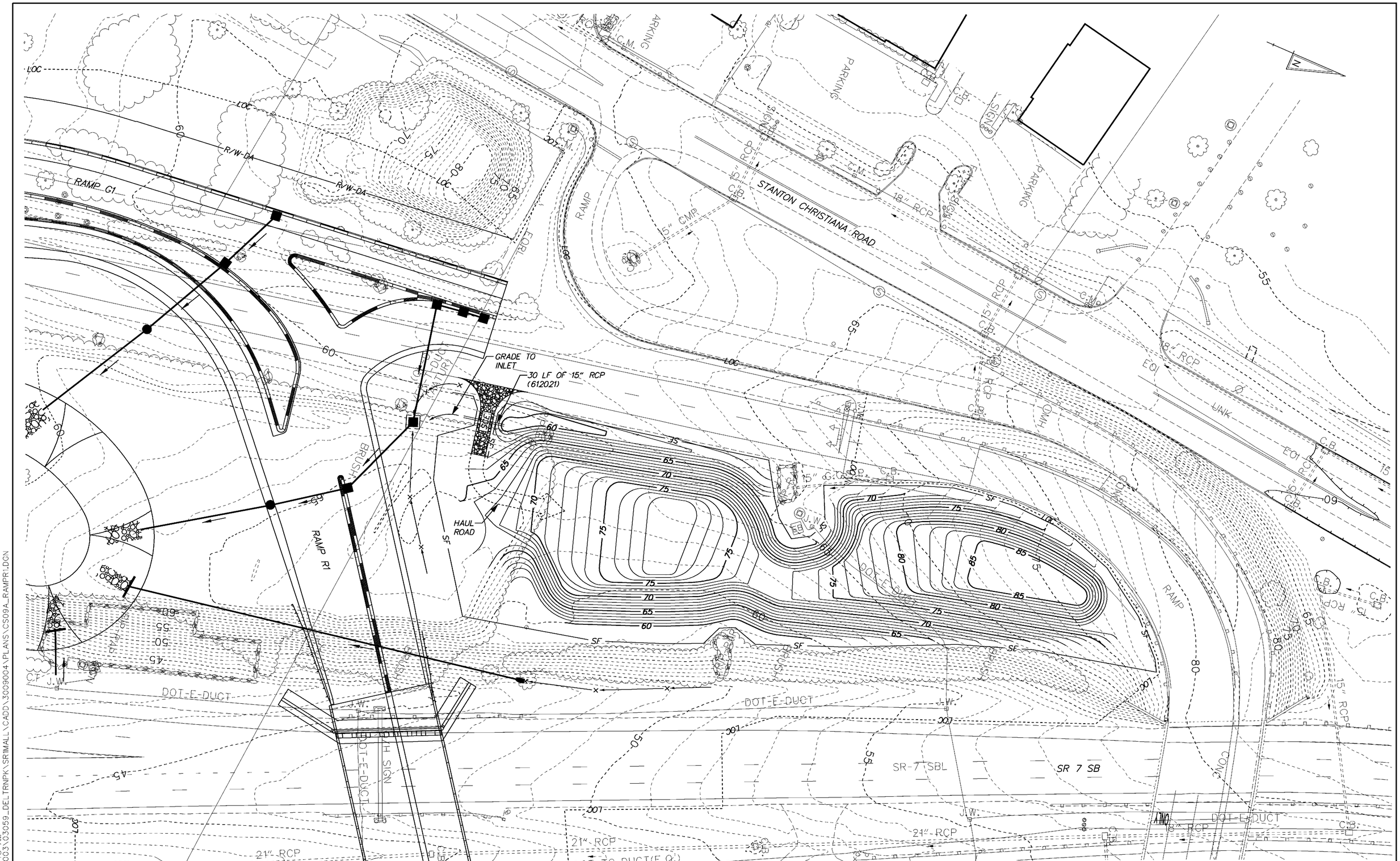

10/8/2010 11:13:45 AM
M:\PROJECTS\2003\03059_DELTRNPK\SRIMALL\CADD\3009004\PLANS\CS09A_RAMPR1.DGN

DELAWARE DEPARTMENT OF TRANSPORTATION

ADDENDUMS / REVISIONS

SCALE 0 30 60 90 FEET

SR1/I-95 INTERCHANGE - CHRISTIANA MALL ROAD BRIDGE

CONTRACT	BRIDGE NO.	1-223
T201009004	DESIGNED BY:	ZJS
COUNTY		
NEW CASTLE	CHECKED BY:	RLS

CONSTRUCTION PHASING, MOT AND EROSION CONTROL SOIL STOCKPILE AREA A

SHEET NO.
124B
TOTAL SHTS.
164

NOTES:

1. THE CONTRACTOR SHALL LEAVE THE SILT FENCE AROUND THE PERIMETER OF THE SOIL STOCKPILE AREA FOR USE IN FUTURE CONTRACT. THE STABILIZED CONSTRUCTION ENTRANCE AND INLET PROTECTION SHALL ALSO REMAIN FOR FUTURE USE. CLEAN ALL EROSION CONTROLS OF SEDIMENT AT CONCLUSION OF CONTRACT.

2. THE CONTRACTOR SHALL LEAVE THE PLASTIC DRUMS AND WARNING SIGNS SHOWN ON THIS SHEET, WHICH SHALL BECOME THE PROPERTY OF THE T200809003 CONTRACTOR AT THE END OF THE PROJECT.

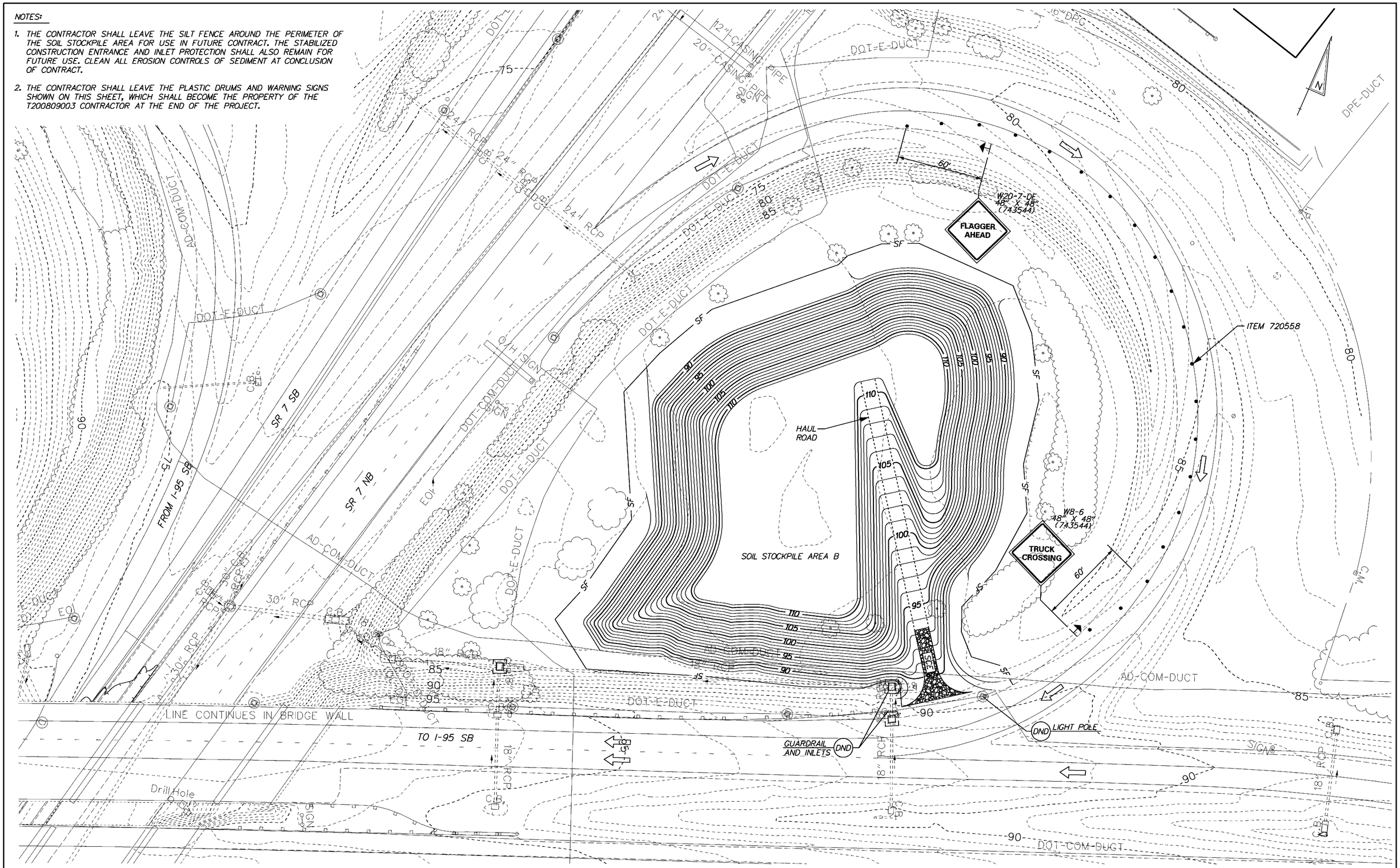

DELAWARE DEPARTMENT OF TRANSPORTATION	ADDENDUMS / REVISIONS	SCALE 0 30 60 90 FEET	SR1/I-95 INTERCHANGE - CHRISTIANA MALL ROAD BRIDGE	CONTRACT T201009004	BRIDGE NO. 1-223	CONSTRUCTION PHASING, MOT AND EROSION CONTROL SOIL STOCKPILE AREA B	SHEET NO. 124C
				COUNTY NEW CASTLE	DESIGNED BY: ZJS		TOTAL SHTS. 164
					CHECKED BY: RLS		

10/8/2010 12:40:30 PM
M:\PROJECTS\2003\03059_DELTRNPK\SR1MALL\CADD\3009004\PLANS\CS09B_RAMPR1.DGN

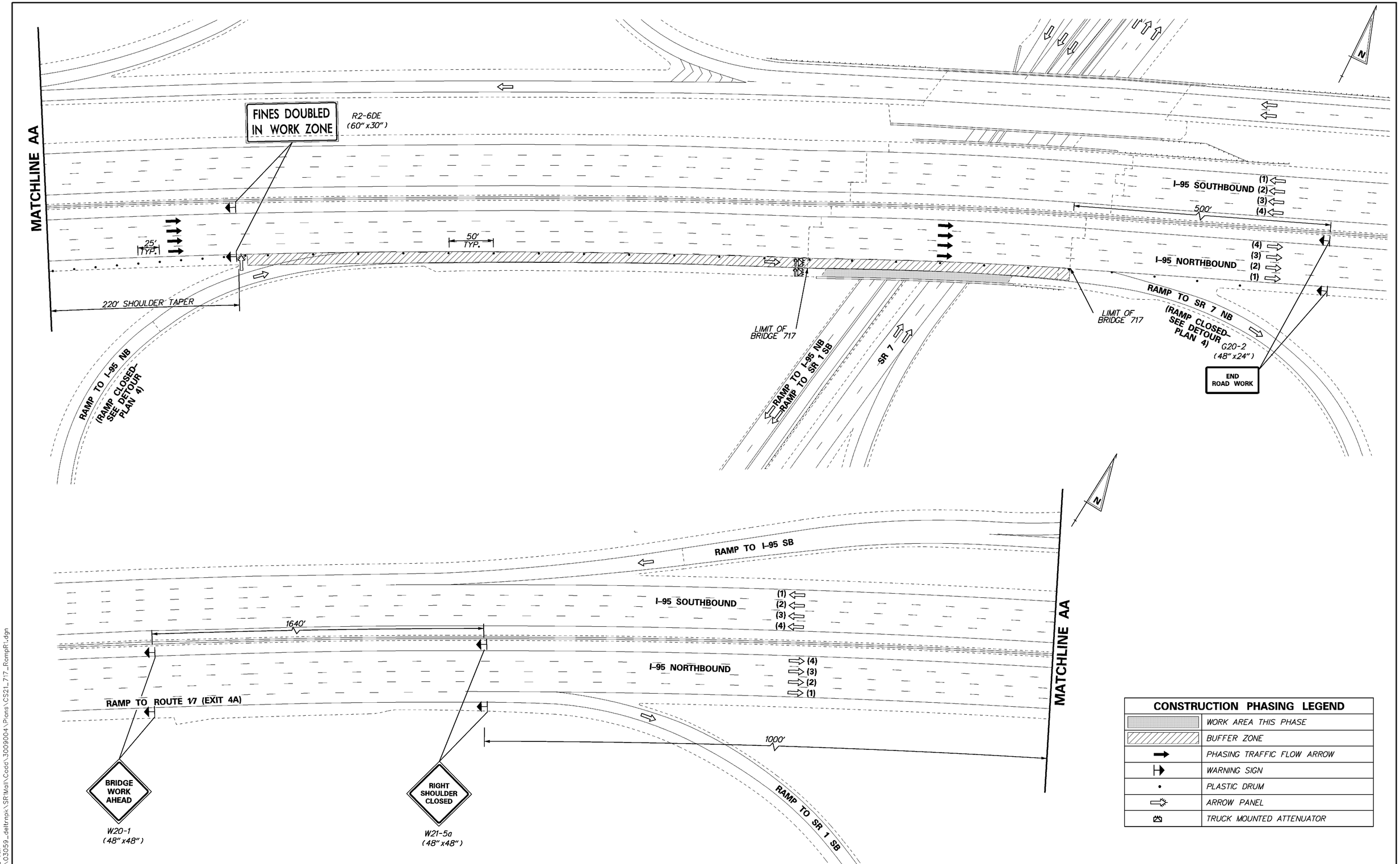

CONSTRUCTION PHASING LEGEND	
	WORK AREA THIS PHASE
	BUFFER ZONE
	PHASING TRAFFIC FLOW ARROW
	WARNING SIGN
	PLASTIC DRUM
	ARROW PANEL
	TRUCK MOUNTED ATTENUATOR

10/5/2010 11:29:39 AM
M:\projects\2003\03059_deltrnpk\SR1Mall\Cadd\3009004\Plans\CS21_717_RampR1.dgn

DELAWARE DEPARTMENT OF TRANSPORTATION

ADDENDUMS / REVISIONS

SCALE 0 50 100 150 FEET

SR1/I-95 INTERCHANGE - CHRISTIANA MALL ROAD BRIDGE

CONTRACT	BRIDGE NO.	1-717
T201009004	DESIGNED BY:	EDJ
COUNTY		
NEW CASTLE	CHECKED BY:	CDW

CONSTRUCTION PHASING AND M.O.T. PLAN BRIDGE 1-717 DECK OUTSIDE SHOULDER WORK ZONE

SHEET NO. 124D

TOTAL SHTS. 164

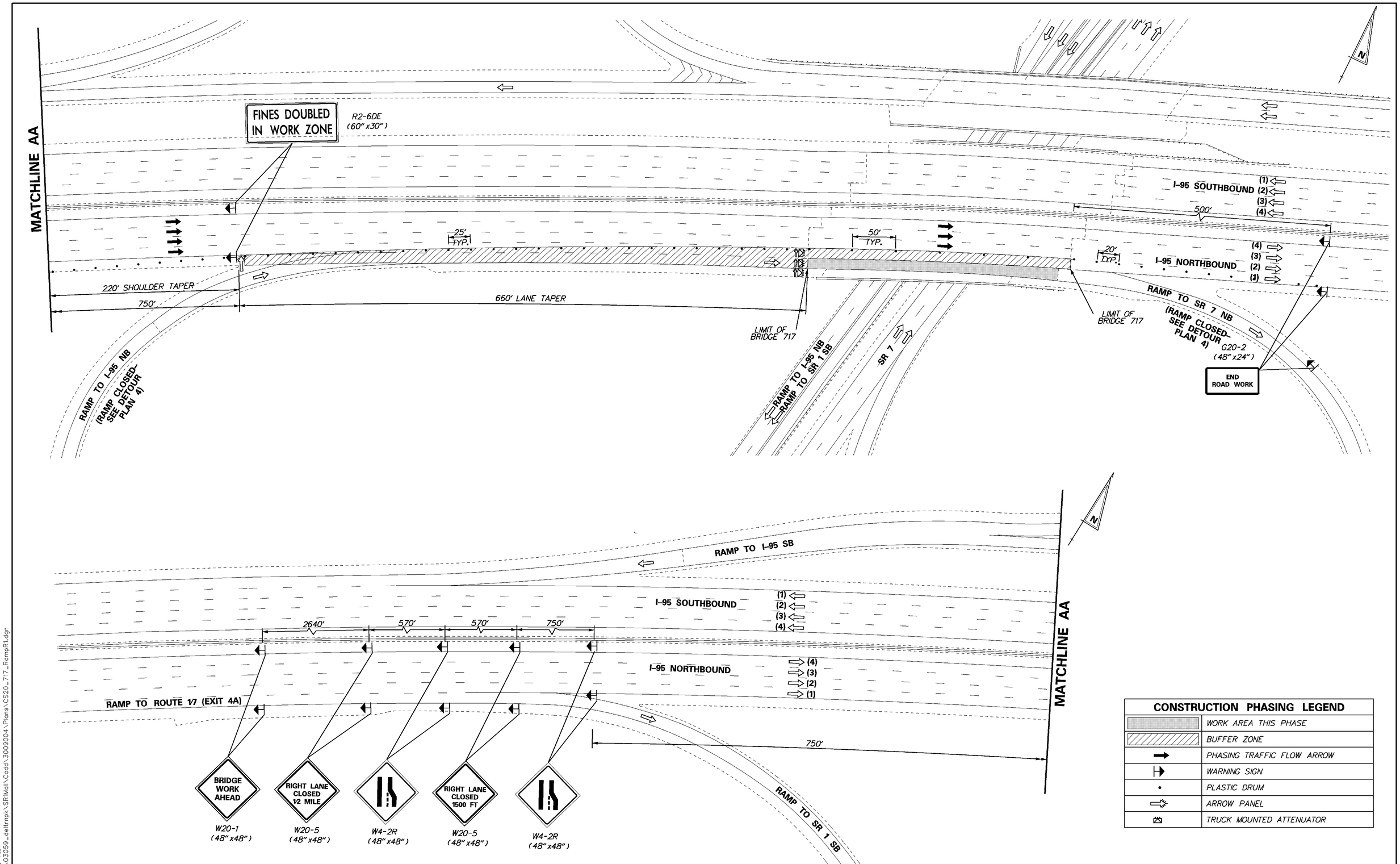

CONSTRUCTION PHASING LEGEND	
	WORK AREA THIS PHASE
	BUFFER ZONE
	PHASING TRAFFIC FLOW ARROW
	WARNING SIGN
•	PLASTIC DRUM
	ARROW PANEL
	TRUCK MOUNTED ATTENUATOR

10/5/2010 11:29:43 AM
M:\projects\2003\03059_deltrnpk\SRMall\Cadd\3009004\Plans\CS20_717_RampR1.dgn

DELAWARE DEPARTMENT OF TRANSPORTATION

ADDENDUMS / REVISIONS

SCALE 0 50 100 150 FEET

SR1/I-95 INTERCHANGE - CHRISTIANA MALL ROAD BRIDGE

CONTRACT	BRIDGE NO.	1-717
T201009004	DESIGNED BY: EDJ	
COUNTY		
NEW CASTLE	CHECKED BY: CDW	

CONSTRUCTION PHASING AND M.O.T. PLAN BRIDGE 1-717 DECK RAMP LANE WORK ZONE

SHEET NO. 124E
TOTAL SHTS. 164

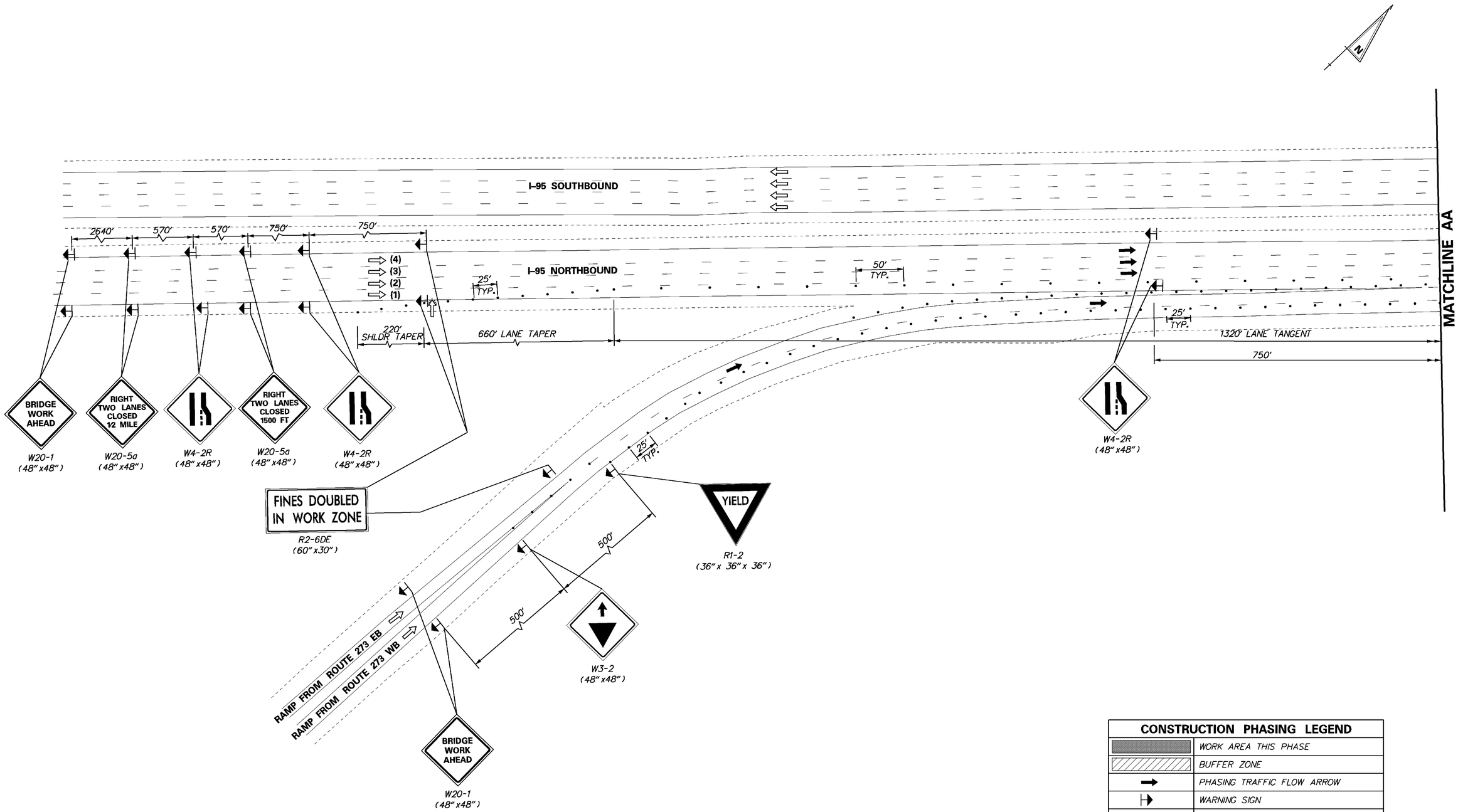

CONSTRUCTION PHASING LEGEND	
	WORK AREA THIS PHASE
	BUFFER ZONE
	PHASING TRAFFIC FLOW ARROW
	WARNING SIGN
	PLASTIC DRUM
	ARROW PANEL
	TRUCK MOUNTED ATTENUATOR

10/5/2010 11:37:53 AM
M:\projects\2003\03059_delterpk\SRIMall\Cadd\3009004\Plans\CS11_717_RampR1.dgn

DELAWARE DEPARTMENT OF TRANSPORTATION

ADDENDUMS / REVISIONS

SCALE 0 50 100 150 FEET

SR1 / I-95 INTERCHANGE - CHRISTIANA MALL ROAD BRIDGE

CONTRACT	BRIDGE NO.	1-717
T201009004	DESIGNED BY: EDJ	
COUNTY		
NEW CASTLE	CHECKED BY: CDW	

CONSTRUCTION PHASING AND M.O.T. PLAN BRIDGE 1-717 DECK LANE 1 WORK ZONE

SHEET NO. 124F
TOTAL SHTS. 164

CONSTRUCTION PHASING LEGEND	
	WORK AREA THIS PHASE
	BUFFER ZONE
	PHASING TRAFFIC FLOW ARROW
	WARNING SIGN
	PLASTIC DRUM
	ARROW PANEL
	TRUCK MOUNTED ATTENUATOR

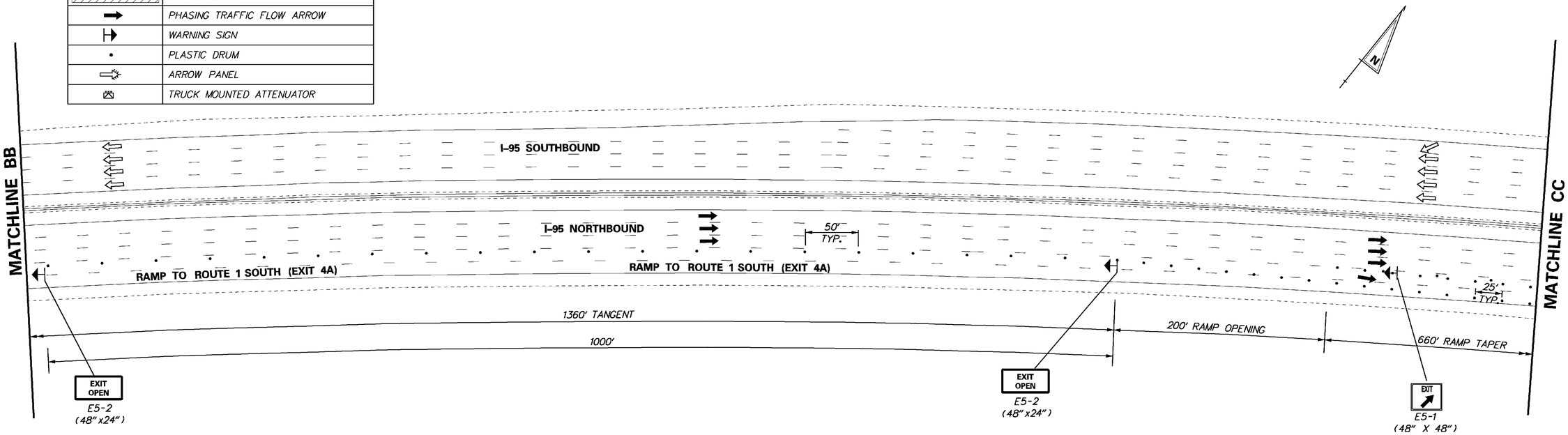

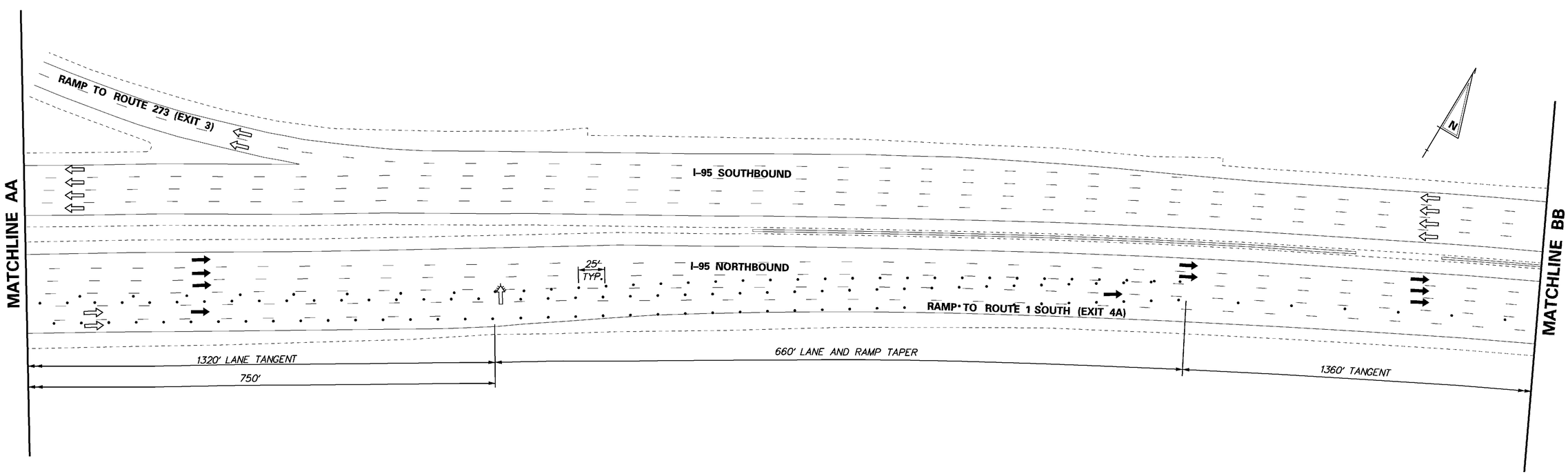

DELAWARE DEPARTMENT OF TRANSPORTATION

ADDENDUMS / REVISIONS

SCALE 0 50 100 150 FEET

SR1/I-95 INTERCHANGE - CHRISTIANA MALL ROAD BRIDGE

CONTRACT	BRIDGE NO.	1-717
T201009004	DESIGNED BY: EDJ	
COUNTY		
NEW CASTLE	CHECKED BY: CDW	

CONSTRUCTION PHASING AND M.O.T. PLAN BRIDGE 1-717 DECK LANE 1 WORK ZONE

SHEET NO.
124G
TOTAL SHTS.
164

10/5/2010 11:40:29 AM
M:\projects\2003\03059_deltrnpk\SRMall\Cadd\3009004\Plans\CS12_717_RampR1.dgn

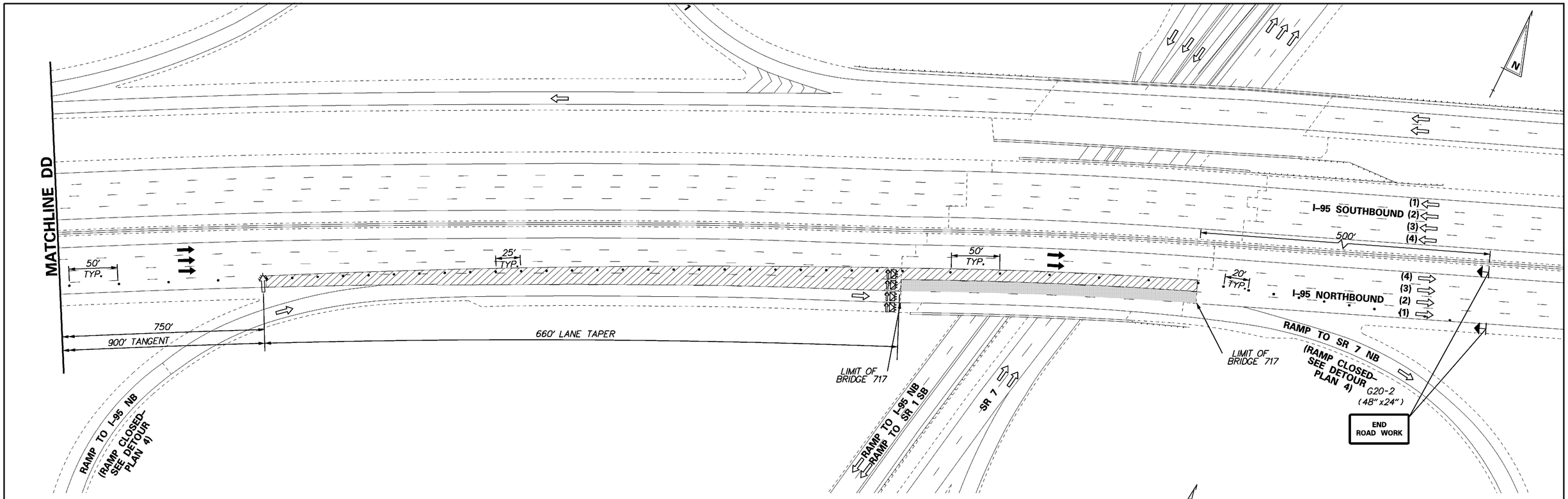

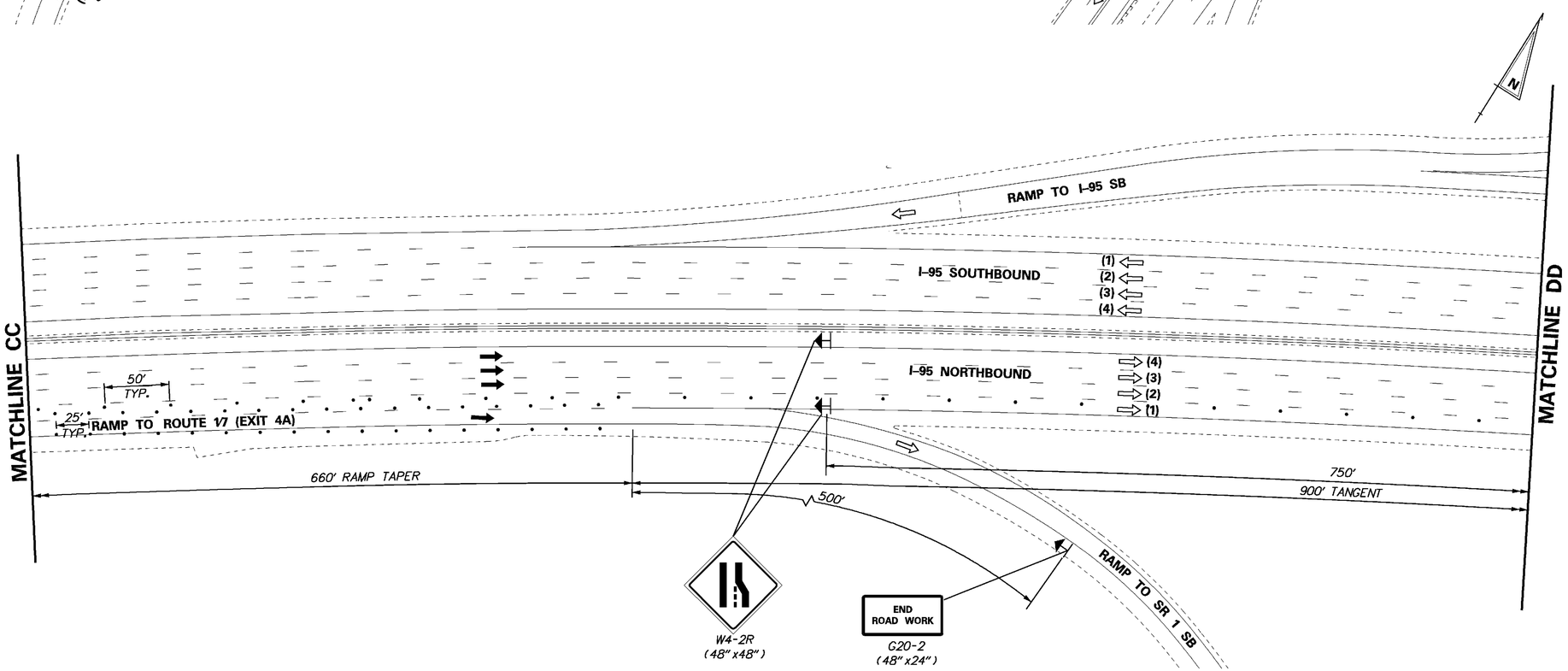

CONSTRUCTION PHASING LEGEND	
	WORK AREA THIS PHASE
	BUFFER ZONE
	PHASING TRAFFIC FLOW ARROW
	WARNING SIGN
	PLASTIC DRUM
	ARROW PANEL
	TRUCK MOUNTED ATTENUATOR

10/5/2010 11:41:57 AM
M:\projects\2003\03059_deltrnpk\SR1Mall\Cadd\3009004\Plans\CS13_717_RampR1.dgn

DELAWARE DEPARTMENT OF TRANSPORTATION

ADDENDUMS / REVISIONS

SCALE 0 50 100 150 FEET

SR1 / I-95 INTERCHANGE - CHRISTIANA MALL ROAD BRIDGE

CONTRACT	BRIDGE NO.	1-717
T201009004	DESIGNED BY:	EDJ
COUNTY		
NEW CASTLE	CHECKED BY:	CDW

CONSTRUCTION PHASING AND M.O.T. PLAN BRIDGE 1-717 DECK LANE 1 WORK ZONE

SHEET NO.
124H
TOTAL SHTS.
164

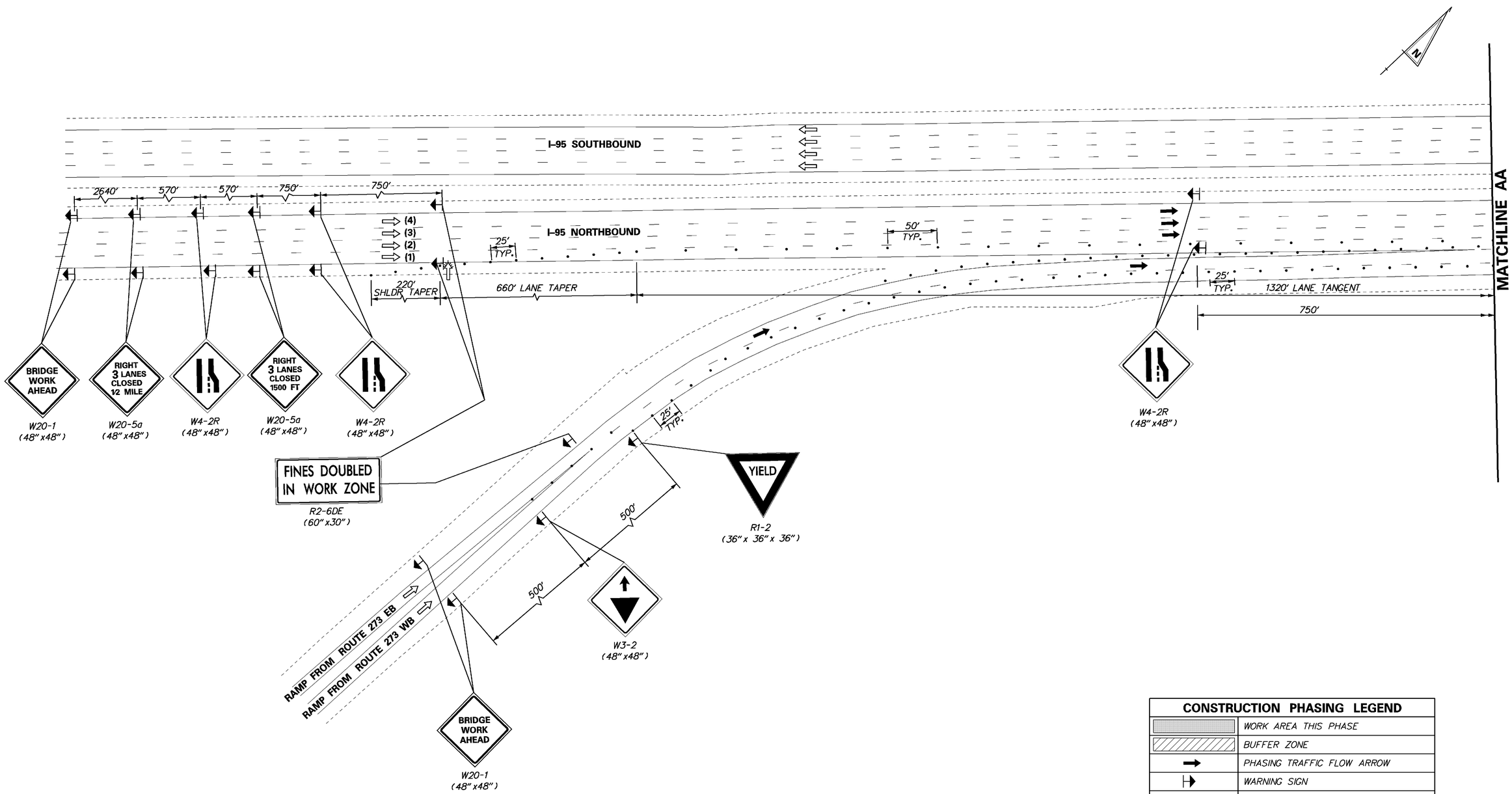

CONSTRUCTION PHASING LEGEND	
	WORK AREA THIS PHASE
	BUFFER ZONE
	PHASING TRAFFIC FLOW ARROW
	WARNING SIGN
	PLASTIC DRUM
	ARROW PANEL
	TRUCK MOUNTED ATTENUATOR

10/5/2010 11:44:28 AM
M:\projects\2003\03059_delterpk\SRIMall\Cadd\3009004\Plans\CS14_717_RampR1.dgn

DELAWARE DEPARTMENT OF TRANSPORTATION

ADDENDUMS / REVISIONS

SCALE 0 50 100 150 FEET

SR1 / I-95 INTERCHANGE - CHRISTIANA MALL ROAD BRIDGE

CONTRACT	BRIDGE NO.	1-717
T201009004	DESIGNED BY: EDJ	
COUNTY		
NEW CASTLE	CHECKED BY: CDW	

CONSTRUCTION PHASING AND M.O.T. PLAN BRIDGE 1-717 DECK LANE 2 WORK ZONE

SHEET NO.
1241
TOTAL SHTS.
164

CONSTRUCTION PHASING LEGEND	
	WORK AREA THIS PHASE
	BUFFER ZONE
	PHASING TRAFFIC FLOW ARROW
	WARNING SIGN
	PLASTIC DRUM
	ARROW PANEL
	TRUCK MOUNTED ATTENUATOR

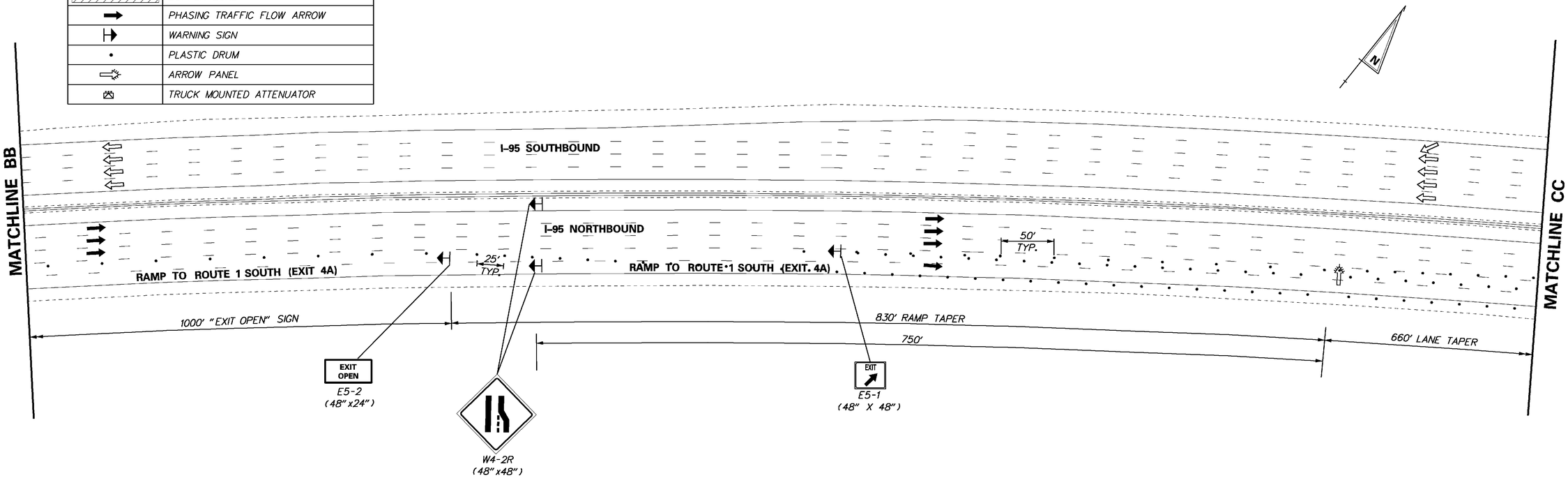

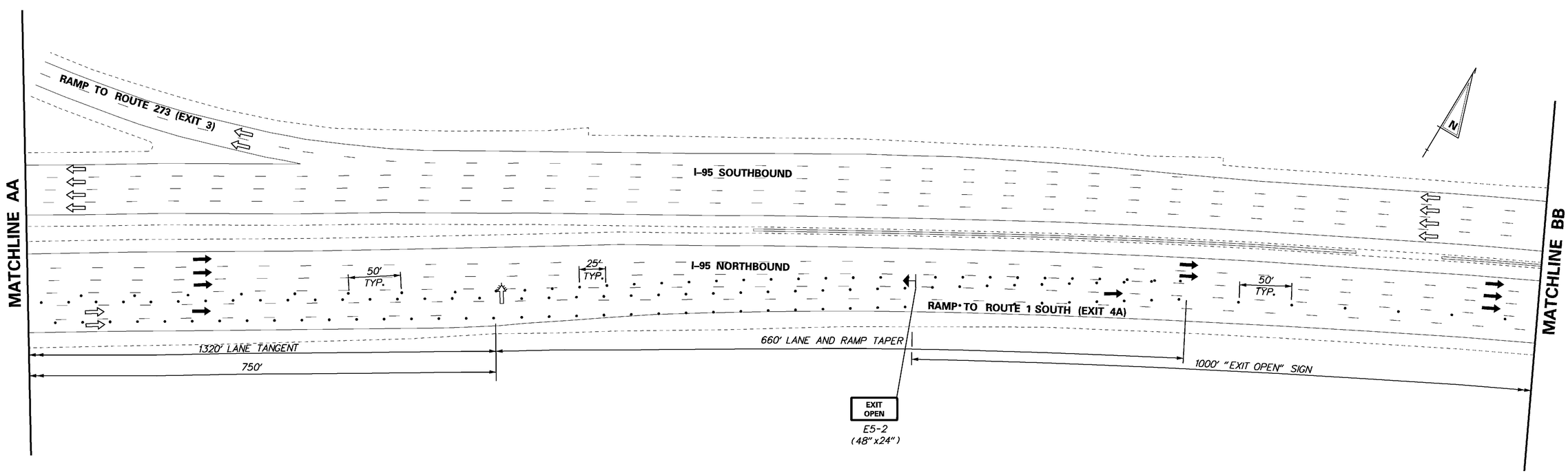

DELAWARE DEPARTMENT OF TRANSPORTATION	ADDENDUMS / REVISIONS	SCALE 0 50 100 150 FEET	SR1/I-95 INTERCHANGE - CHRISTIANA MALL ROAD BRIDGE	CONTRACT T201009004	BRIDGE NO. 1-717	CONSTRUCTION PHASING AND M.O.T. PLAN BRIDGE 1-717 DECK LANE 2 WORK ZONE	SHEET NO. 124J
				COUNTY NEW CASTLE	DESIGNED BY: EDJ		TOTAL SHTS. 164
					CHECKED BY: CDW		

10/5/2010 11:45:55 AM
M:\projects\2003\03059_deltrapk\SRMall\Cadd\3009004\Plans\CS15_717_RampR1.dgn

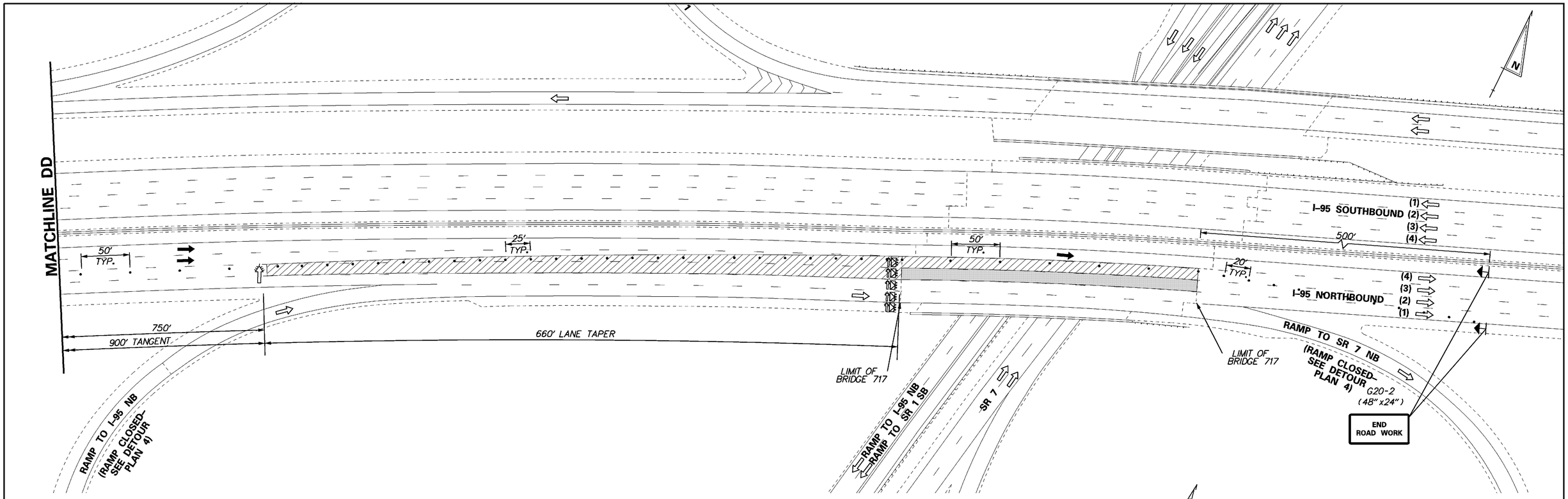

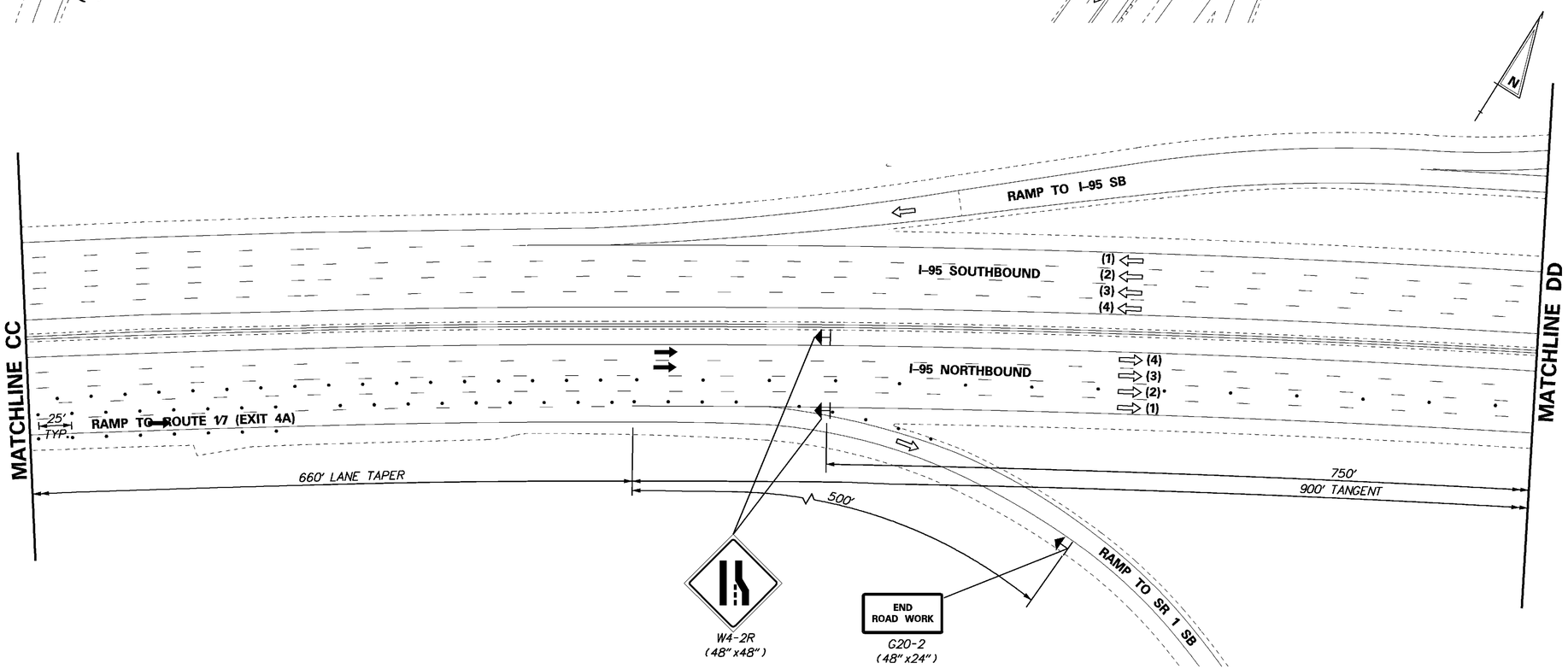

CONSTRUCTION PHASING LEGEND	
	WORK AREA THIS PHASE
	BUFFER ZONE
	PHASING TRAFFIC FLOW ARROW
	WARNING SIGN
	PLASTIC DRUM
	ARROW PANEL
	TRUCK MOUNTED ATTENUATOR

DELAWARE DEPARTMENT OF TRANSPORTATION

ADDENDUMS / REVISIONS

SCALE 0 50 100 150 FEET

SR1 / I-95 INTERCHANGE - CHRISTIANA MALL ROAD BRIDGE

CONTRACT	BRIDGE NO.	1-717
T201009004	DESIGNED BY:	EDJ
COUNTY		
NEW CASTLE	CHECKED BY:	CDW

CONSTRUCTION PHASING AND M.O.T. PLAN BRIDGE 1-717 DECK LANE 2 WORK ZONE

SHEET NO. 124K

TOTAL SHTS. 164

10/5/2010 11:47:03 AM
M:\projects\2003\03059_deltrnpk\SR1Mall\Cadd\3009004\Plans\CS16_717_RampR1.dgn

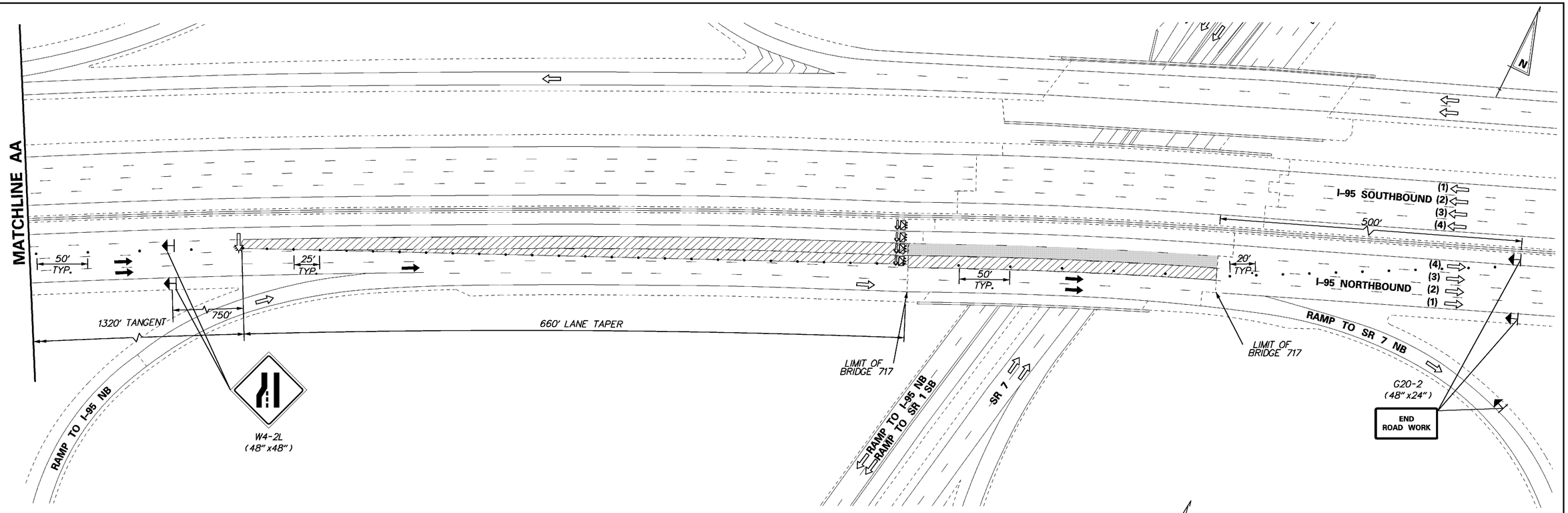

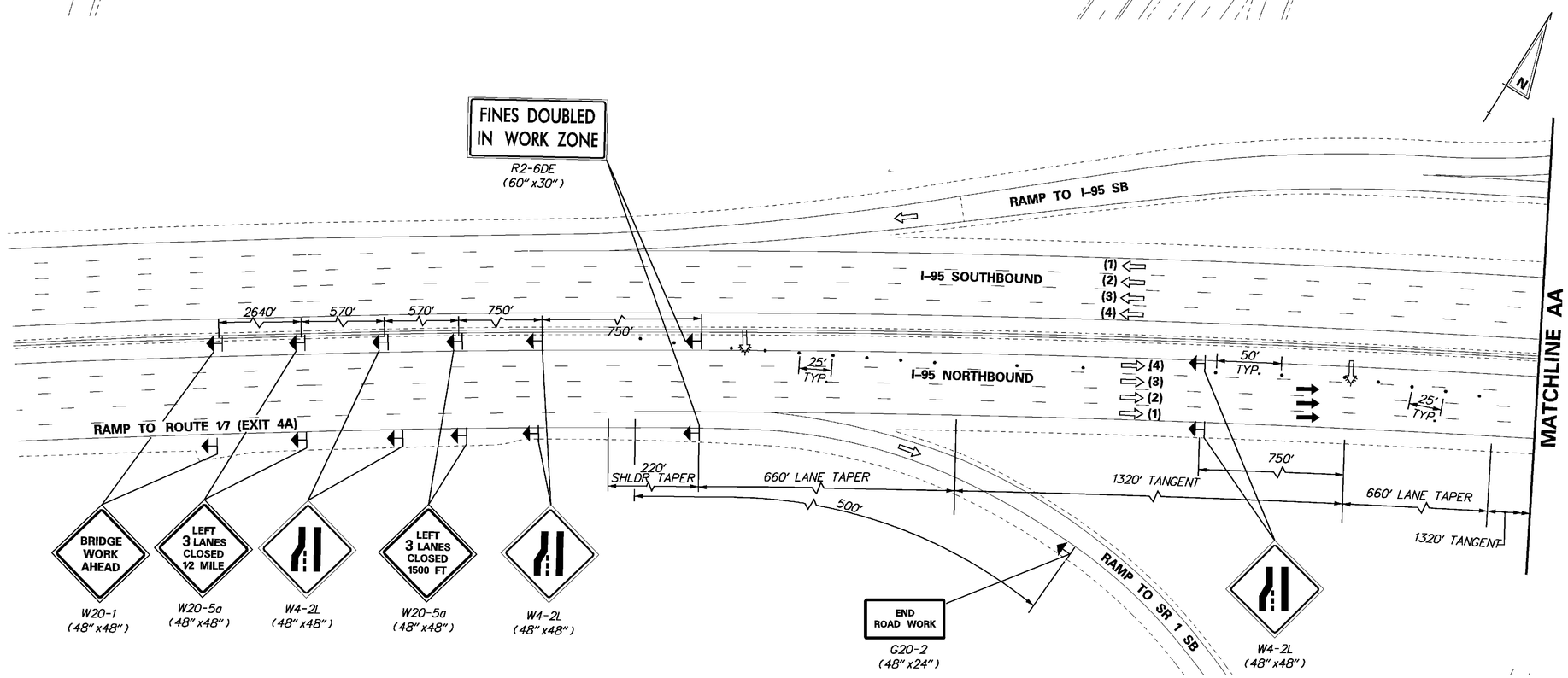

CONSTRUCTION PHASING LEGEND	
	WORK AREA THIS PHASE
	BUFFER ZONE
	PHASING TRAFFIC FLOW ARROW
	WARNING SIGN
•	PLASTIC DRUM
	ARROW PANEL
	TRUCK MOUNTED ATTENUATOR

10/5/2010 11:50:20 AM
M:\projects\2003\03059_deltrnpk\SR1\Mall\Cadd\3009004\Plans\CS17_717_RampR1.dgn

DELAWARE DEPARTMENT OF TRANSPORTATION

ADDENDUMS / REVISIONS

SCALE 0 50 100 150 FEET

SR1/I-95 INTERCHANGE - CHRISTIANA MALL ROAD BRIDGE

CONTRACT	BRIDGE NO.	1-717
T201009004	DESIGNED BY: EDJ	
COUNTY		
NEW CASTLE	CHECKED BY: CDW	

CONSTRUCTION PHASING AND M.O.T. PLAN BRIDGE 1-717 DECK LANE 3 WORK ZONE

SHEET NO.
124L
TOTAL SHTS.
164

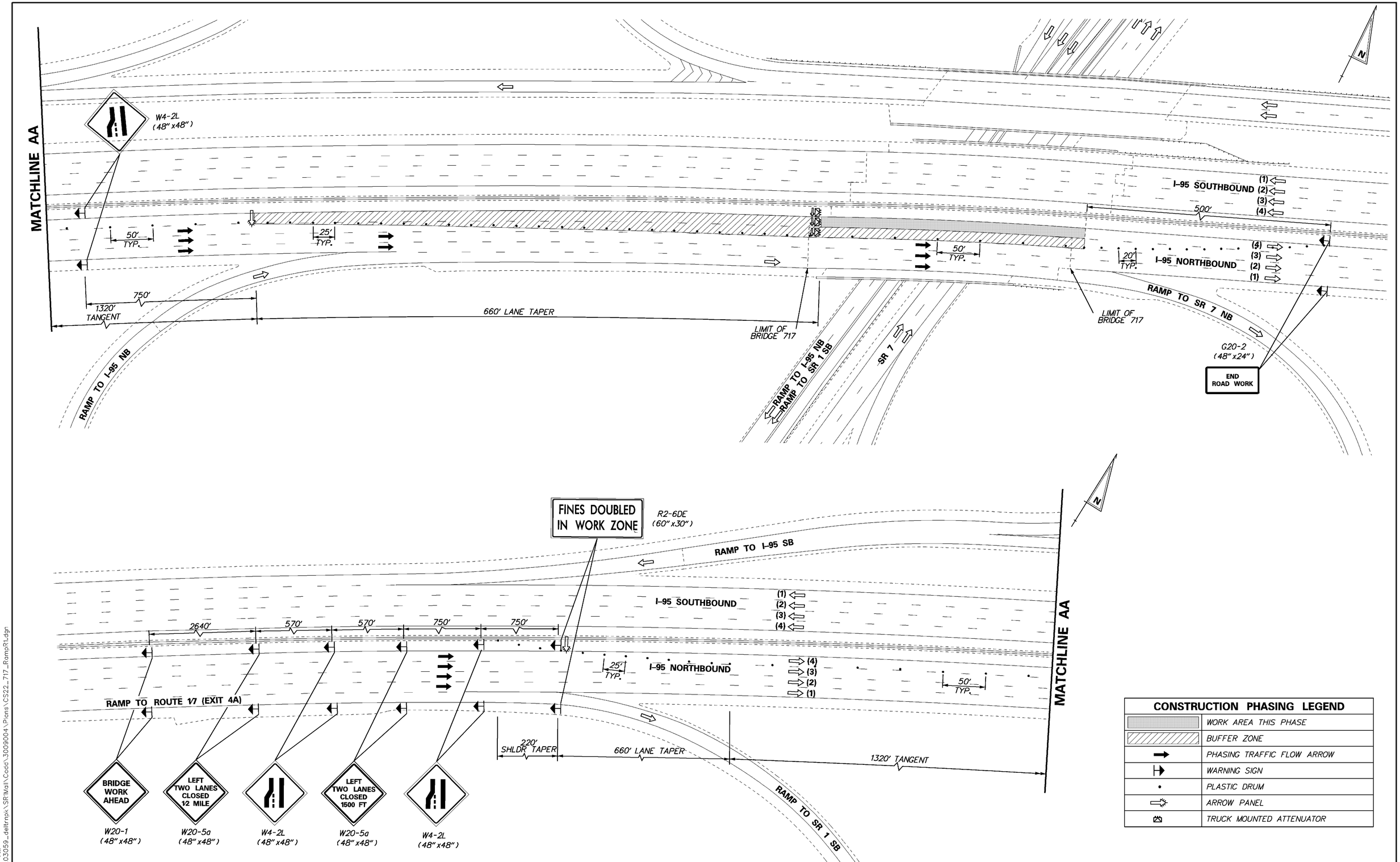

CONSTRUCTION PHASING LEGEND	
	WORK AREA THIS PHASE
	BUFFER ZONE
	PHASING TRAFFIC FLOW ARROW
	WARNING SIGN
	PLASTIC DRUM
	ARROW PANEL
	TRUCK MOUNTED ATTENUATOR

10/5/2010 11:55:29 AM
M:\projects\2003\03059_deltmpk\SR1Mall\Cadd\3009004\Plans\CS22_717_RampR1.dgn

DELAWARE DEPARTMENT OF TRANSPORTATION

ADDENDUMS / REVISIONS

SCALE 0 50 100 150 FEET

SR1/I-95 INTERCHANGE - CHRISTIANA MALL ROAD BRIDGE

CONTRACT	BRIDGE NO.	1-717
T201009004	DESIGNED BY:	EDJ
COUNTY		
NEW CASTLE	CHECKED BY:	CDW

CONSTRUCTION PHASING AND M.O.T. PLAN BRIDGE 1-717 DECK LANE 4 WORK ZONE

SHEET NO.
124M
TOTAL SHTS.
164

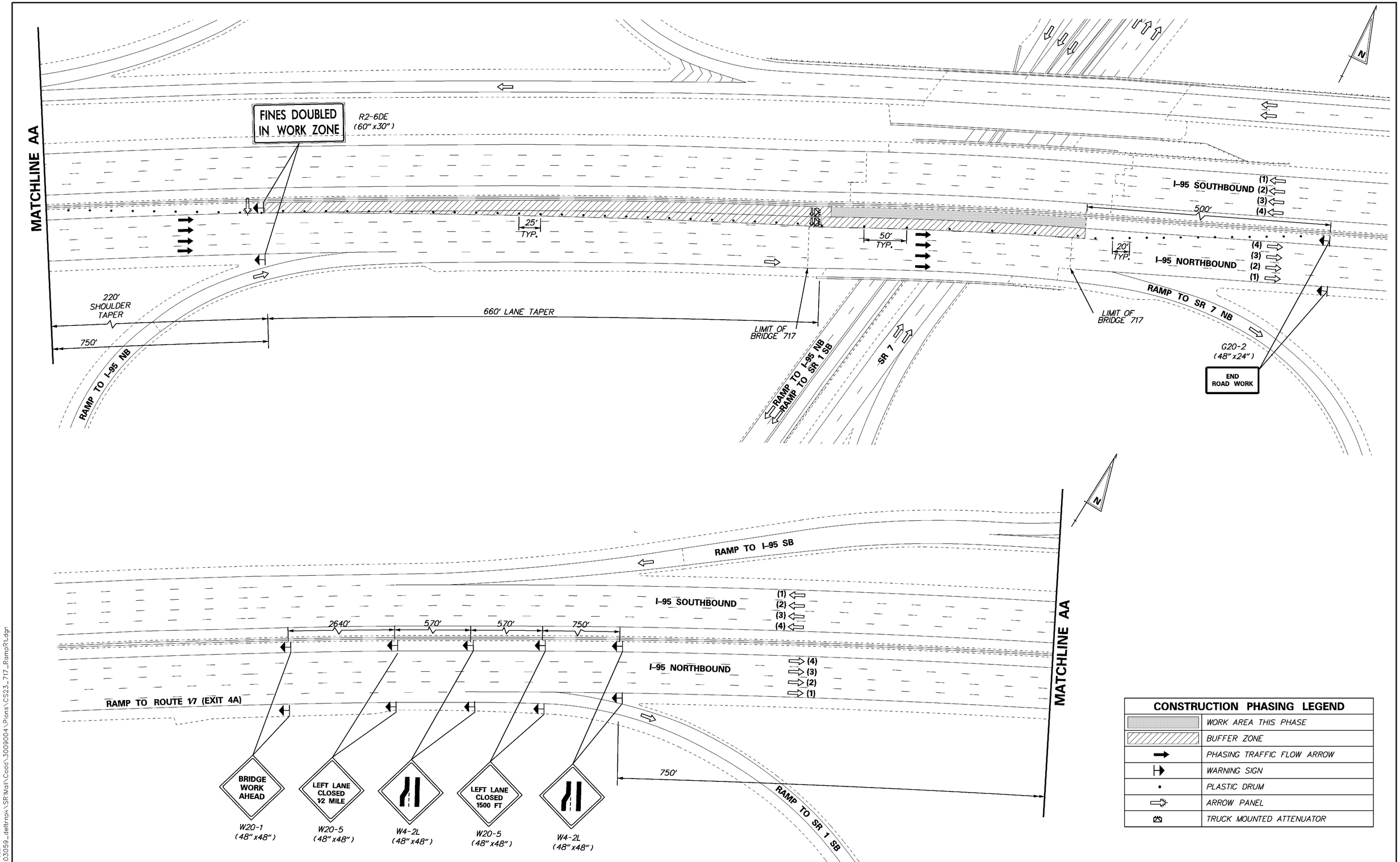

CONSTRUCTION PHASING LEGEND	
	WORK AREA THIS PHASE
	BUFFER ZONE
	PHASING TRAFFIC FLOW ARROW
	WARNING SIGN
	PLASTIC DRUM
	ARROW PANEL
	TRUCK MOUNTED ATTENUATOR

10/5/2010 11:59:06 AM
M:\projects\2003\03059_deltrnpk\SR1Mall\Cadd\3009004\Plans\CS23_717_RampR1.dgn

DELAWARE DEPARTMENT OF TRANSPORTATION

ADDENDUMS / REVISIONS

SCALE 0 50 100 150 FEET

SR1/I-95 INTERCHANGE - CHRISTIANA MALL ROAD BRIDGE

CONTRACT	BRIDGE NO.	1-717
T201009004	DESIGNED BY:	EDJ
COUNTY		
NEW CASTLE	CHECKED BY:	CDW

CONSTRUCTION PHASING AND M.O.T. PLAN BRIDGE 1-717 DECK MEDIAN SHOULDER WORK ZONE

SHEET NO. 124N

TOTAL SHTS. 164

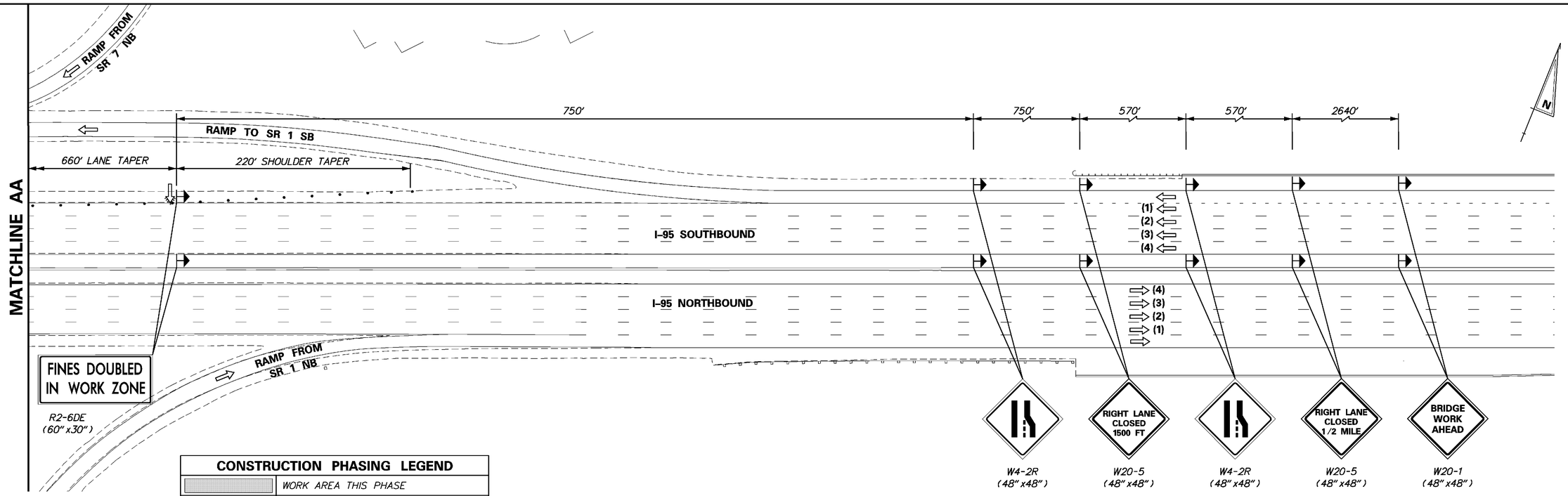

CONSTRUCTION PHASING LEGEND	
	WORK AREA THIS PHASE
	BUFFER ZONE
	PHASING TRAFFIC FLOW ARROW
	WARNING SIGN
	PLASTIC DRUM
	ARROW PANEL
	TRUCK MOUNTED ATTENUATOR

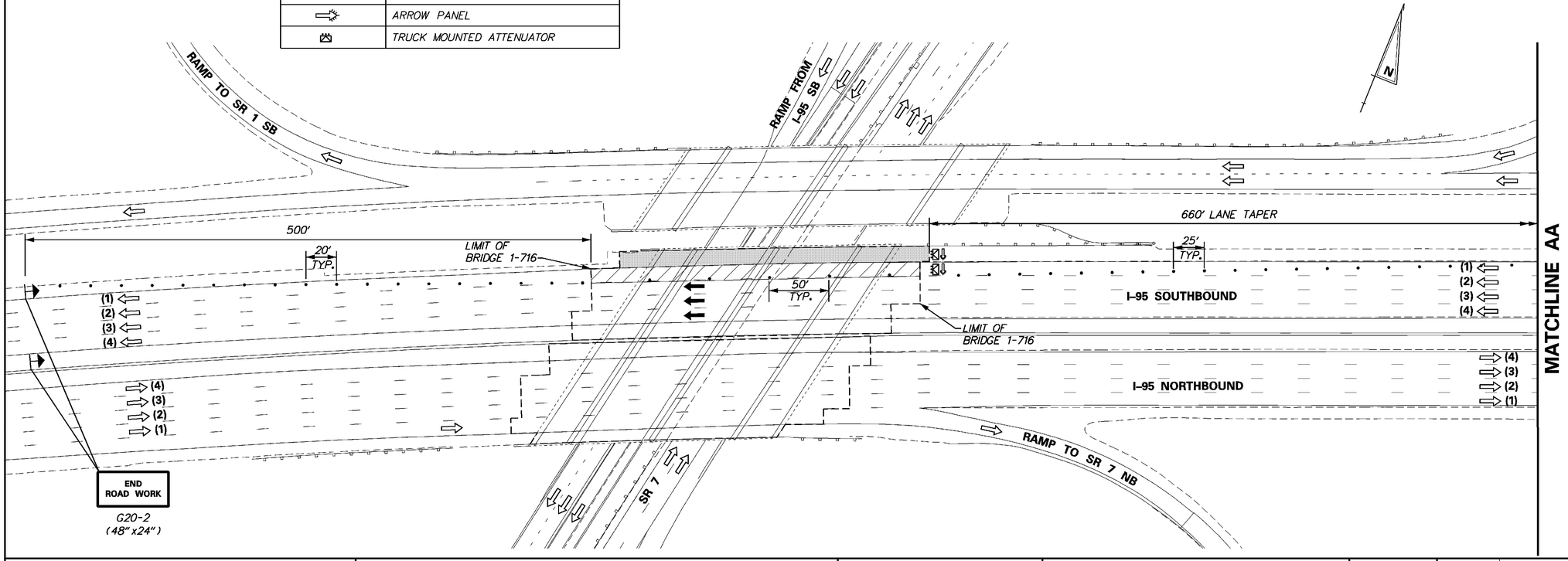

10/7/2010 2:42:03 PM
M:\PROJECTS\2003\03059_DELTRNPK\SRIMALL\CADD\3009004\PLANS\CS24_RAMPR1.DGN

DELAWARE DEPARTMENT OF TRANSPORTATION

ADDENDUMS / REVISIONS

SCALE 0 50 100 150 FEET

SR1/I-95 INTERCHANGE - CHRISTIANA MALL ROAD BRIDGE

CONTRACT	BRIDGE NO.	1-716
T201009004	DESIGNED BY:	EDJ
COUNTY		
NEW CASTLE	CHECKED BY:	CDW

CONSTRUCTION PHASING AND M.O.T. PLAN BRIDGE 1-716 DECK OUTSIDE SHOULDER WORK ZONE

SHEET NO.
1240
TOTAL SHTS.
164

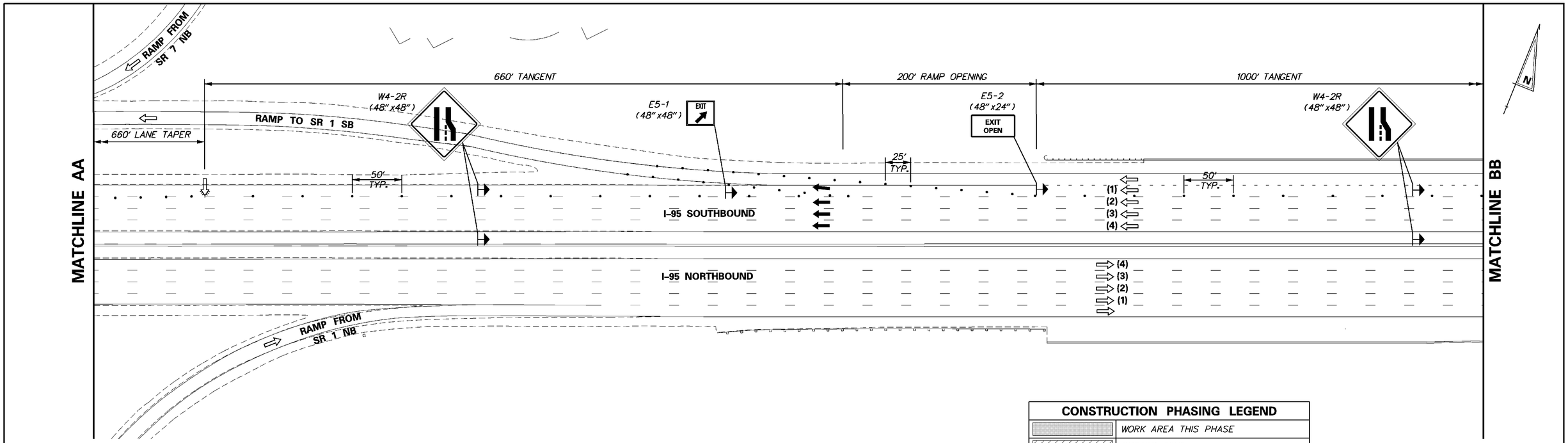

CONSTRUCTION PHASING LEGEND	
	WORK AREA THIS PHASE
	BUFFER ZONE
	PHASING TRAFFIC FLOW ARROW
	WARNING SIGN
	PLASTIC DRUM
	ARROW PANEL
	TRUCK MOUNTED ATTENUATOR

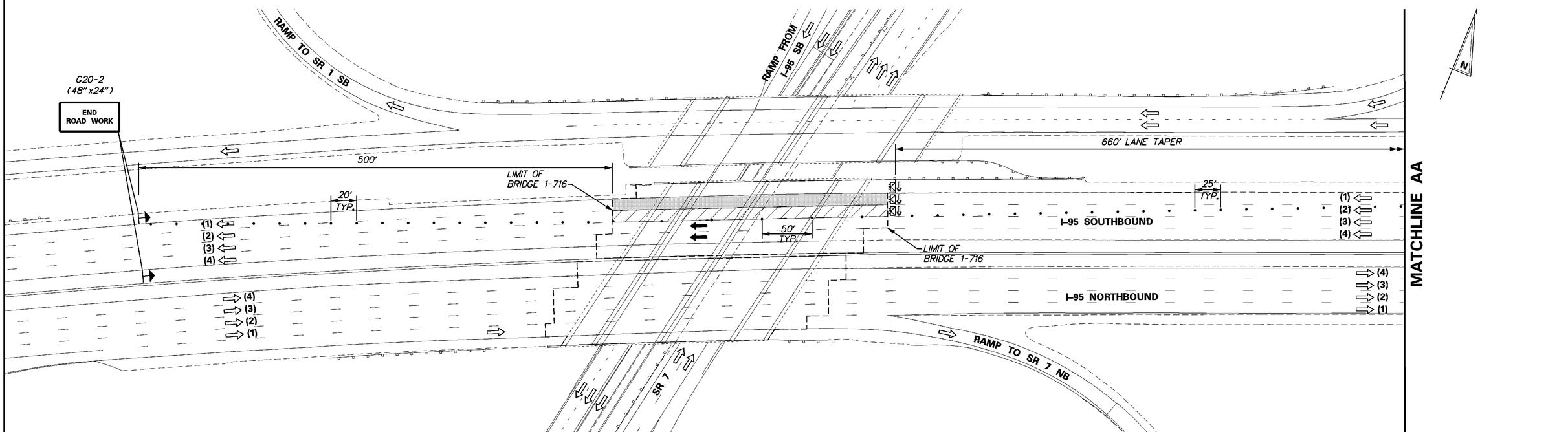

10/7/2010 12:11:25 PM
M:\PROJECTS\2003\03059_DELTRNPK\SRTMALL\CADD\3009004\PLANS\CS25_RAMPR.DGN

DELAWARE DEPARTMENT OF TRANSPORTATION	ADDENDUMS / REVISIONS	SCALE 0 50 100 150 FEET	SR1/I-95 INTERCHANGE - CHRISTIANA MALL ROAD BRIDGE	CONTRACT T201009004	BRIDGE NO. 1-716	CONSTRUCTION PHASING AND M.O.T. PLAN BRIDGE 1-716 DECK LANE 1 WORK ZONE	SHEET NO. 124P
				COUNTY NEW CASTLE	DESIGNED BY: EDJ		TOTAL SHTS. 164
					CHECKED BY: CDW		

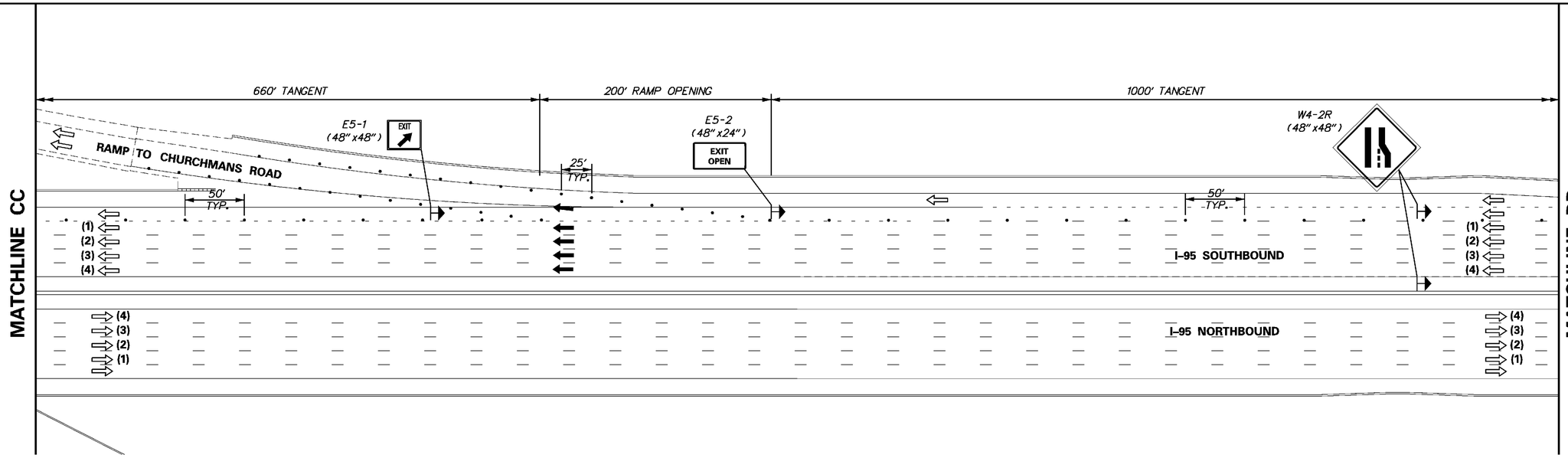

CONSTRUCTION PHASING LEGEND	
	WORK AREA THIS PHASE
	BUFFER ZONE
	PHASING TRAFFIC FLOW ARROW
	WARNING SIGN
	PLASTIC DRUM
	ARROW PANEL
	TRUCK MOUNTED ATTENUATOR

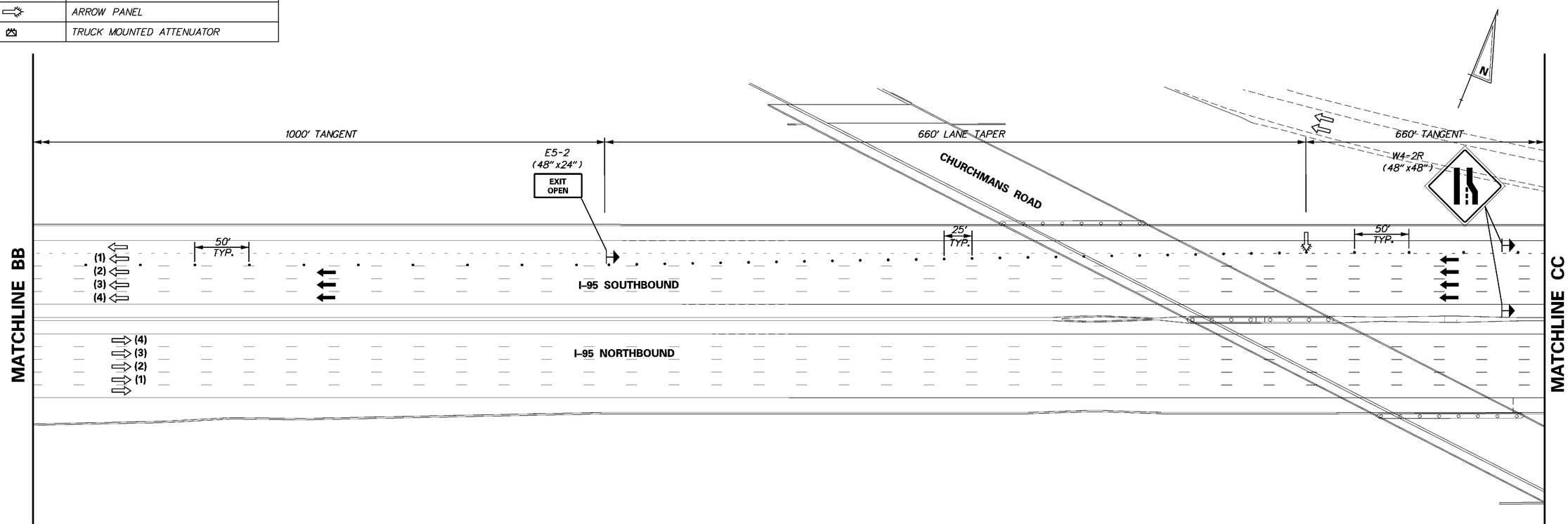

10/7/2010 12:19:21 PM
M:\PROJECTS\2003\03059_DELTRNPK\SRIMALL\CADD\3009004\PLANS\CS26_RAMPR1.DGN

DELAWARE DEPARTMENT OF TRANSPORTATION

ADDENDUMS / REVISIONS

SCALE 0 50 100 150 FEET

SR1/I-95 INTERCHANGE - CHRISTIANA MALL ROAD BRIDGE

CONTRACT	BRIDGE NO.	1-716
T201009004	DESIGNED BY:	EDJ
COUNTY		
NEW CASTLE	CHECKED BY:	CDW

CONSTRUCTION PHASING AND M.O.T. PLAN BRIDGE 1-716 DECK LANE 1 WORK ZONE

SHEET NO.
124Q
TOTAL SHTS.
164

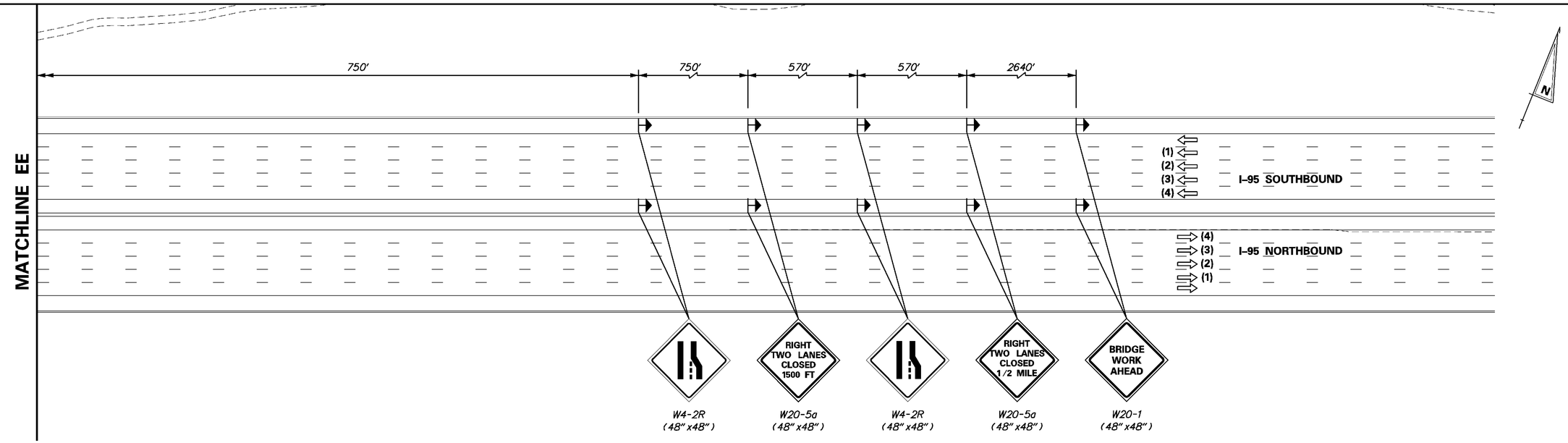

CONSTRUCTION PHASING LEGEND	
	WORK AREA THIS PHASE
	BUFFER ZONE
	PHASING TRAFFIC FLOW ARROW
	WARNING SIGN
	PLASTIC DRUM
	ARROW PANEL
	TRUCK MOUNTED ATTENUATOR

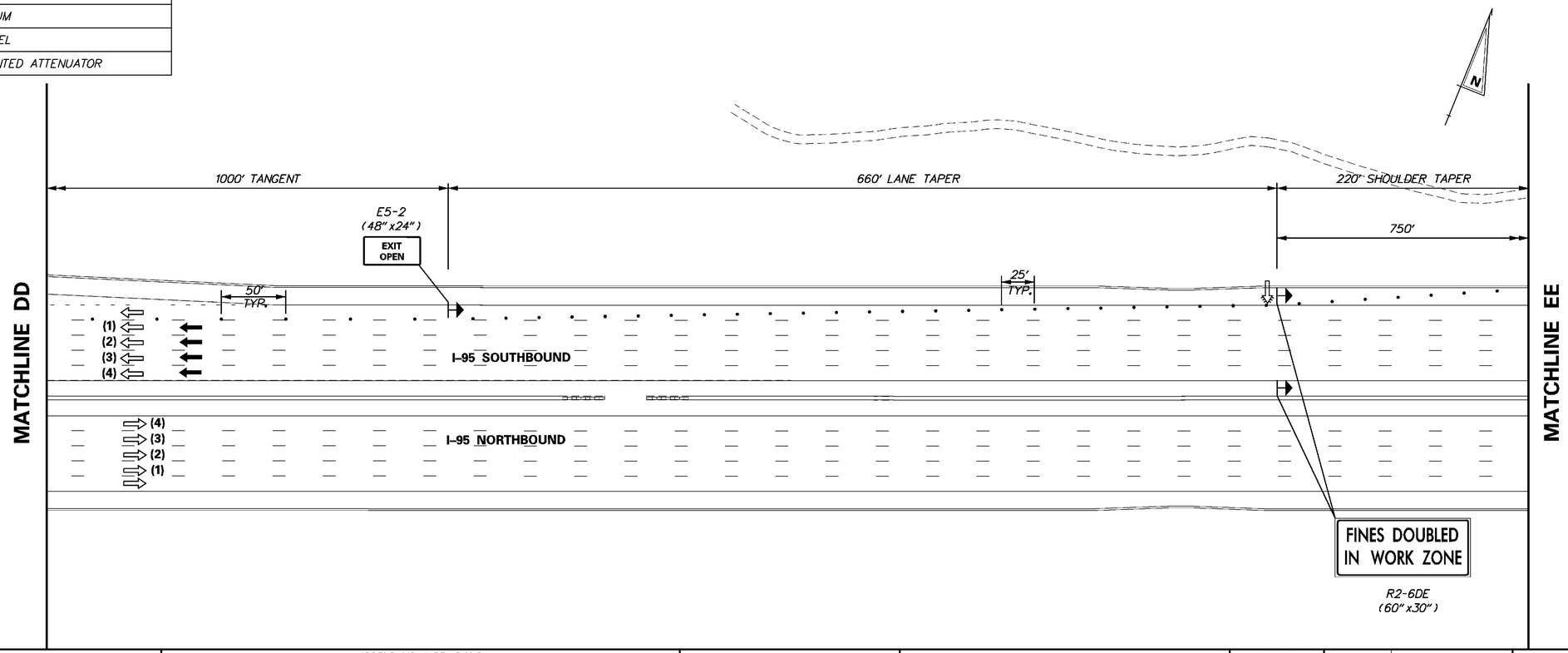

10/7/2010 12:25:27 PM
M:\PROJECTS\2003\03059_DELTRNPK\SRIMALL\CADD\3009004\PLANS\CS27_RAMPR1.DGN

DELAWARE DEPARTMENT OF TRANSPORTATION

ADDENDUMS / REVISIONS

SCALE 0 50 100 150 FEET

SR1/I-95 INTERCHANGE - CHRISTIANA MALL ROAD BRIDGE

CONTRACT	BRIDGE NO.	1-716
T201009004	DESIGNED BY:	EDJ
COUNTY		
NEW CASTLE	CHECKED BY:	CDW

CONSTRUCTION PHASING AND M.O.T. PLAN BRIDGE 1-716 DECK LANE 1 WORK ZONE

SHEET NO.
124R
TOTAL SHTS.
164

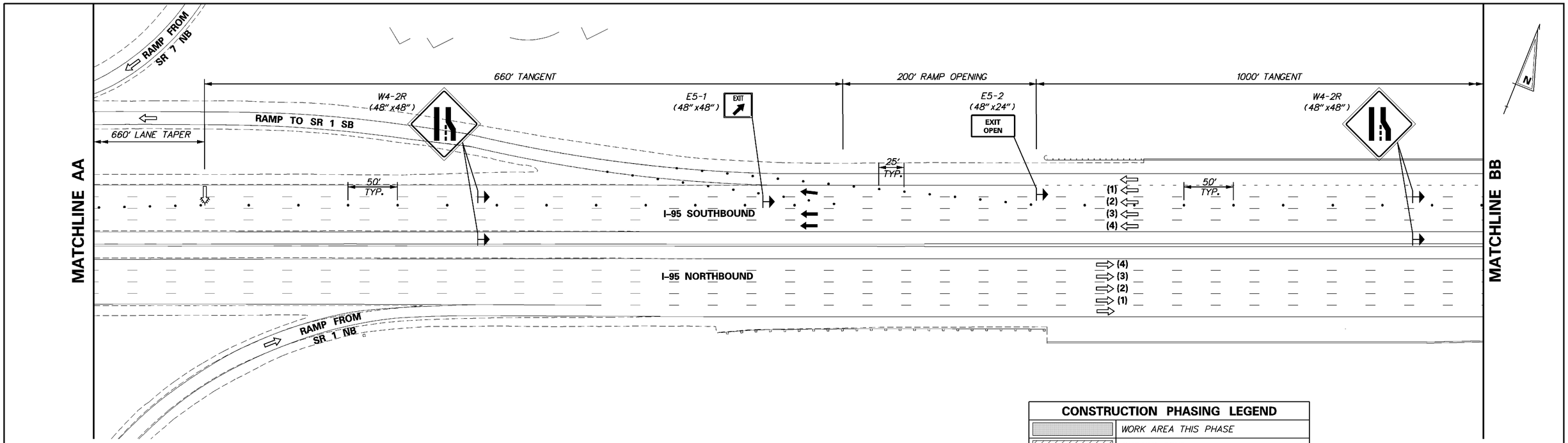

CONSTRUCTION PHASING LEGEND	
	WORK AREA THIS PHASE
	BUFFER ZONE
	PHASING TRAFFIC FLOW ARROW
	WARNING SIGN
	PLASTIC DRUM
	ARROW PANEL
	TRUCK MOUNTED ATTENUATOR

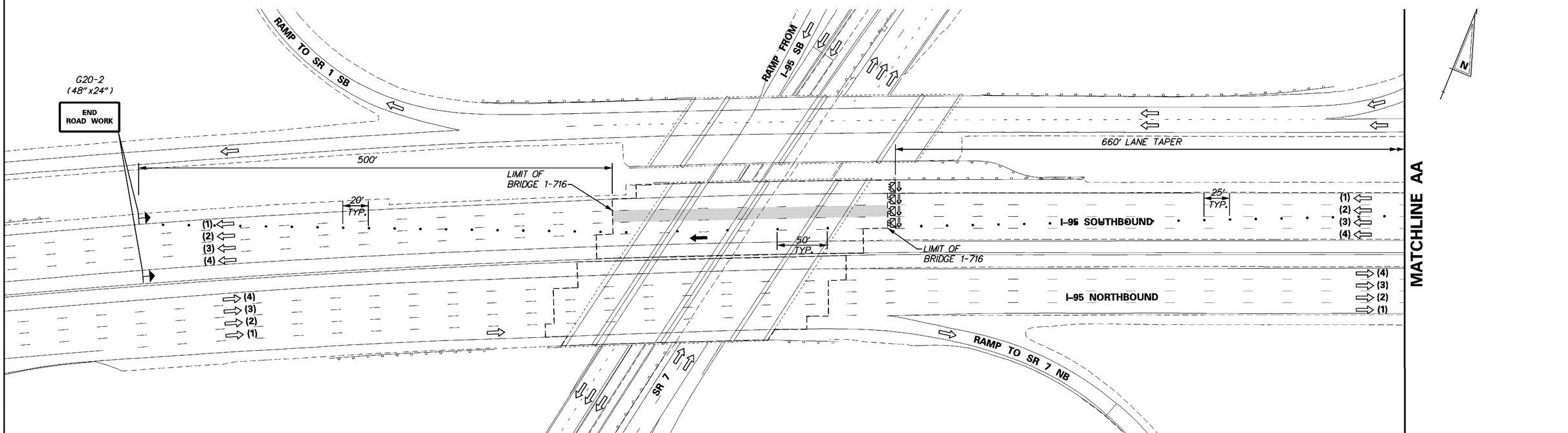

10/7/2010 12:32:09 PM
M:\PROJECTS\2003\03059_DELTRNPK\SRTMALL\CADD\3009004\PLANS\CS28_RAMPR.DGN

DELAWARE DEPARTMENT OF TRANSPORTATION	ADDENDUMS / REVISIONS	SCALE 0 50 100 150 FEET	SR1/I-95 INTERCHANGE - CHRISTIANA MALL ROAD BRIDGE	CONTRACT T201009004	BRIDGE NO. 1-716	CONSTRUCTION PHASING AND M.O.T. PLAN BRIDGE 1-716 DECK LANE 2 WORK ZONE	SHEET NO. 124S
				COUNTY NEW CASTLE	DESIGNED BY: EDJ		TOTAL SHTS. 164
					CHECKED BY: CDW		

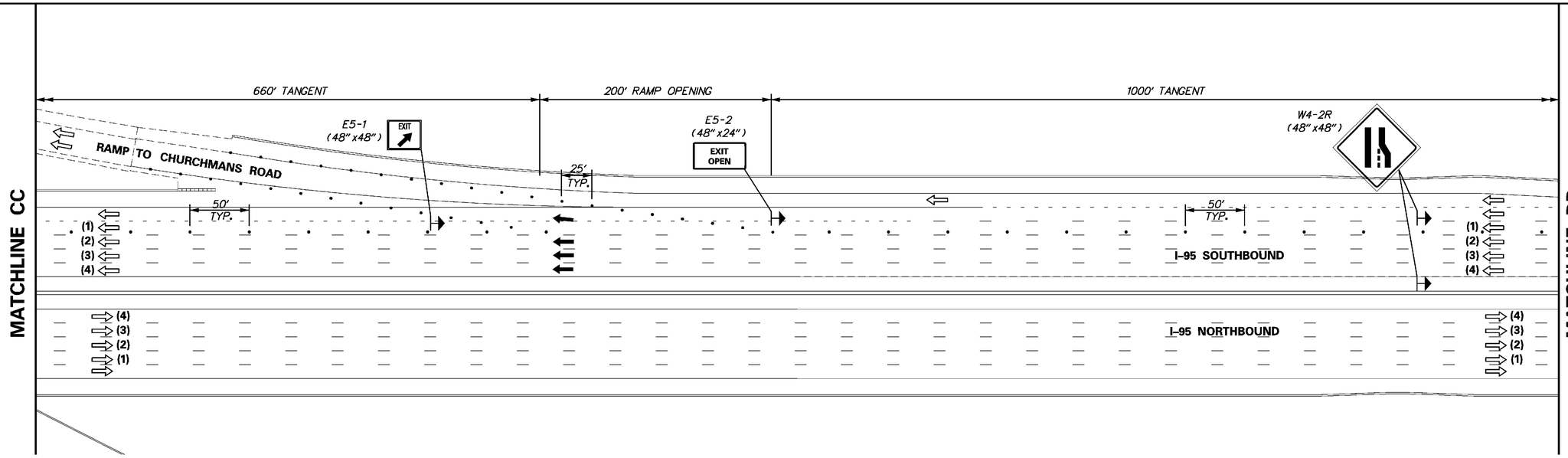

CONSTRUCTION PHASING LEGEND	
	WORK AREA THIS PHASE
	BUFFER ZONE
	PHASING TRAFFIC FLOW ARROW
	WARNING SIGN
	PLASTIC DRUM
	ARROW PANEL
	TRUCK MOUNTED ATTENUATOR

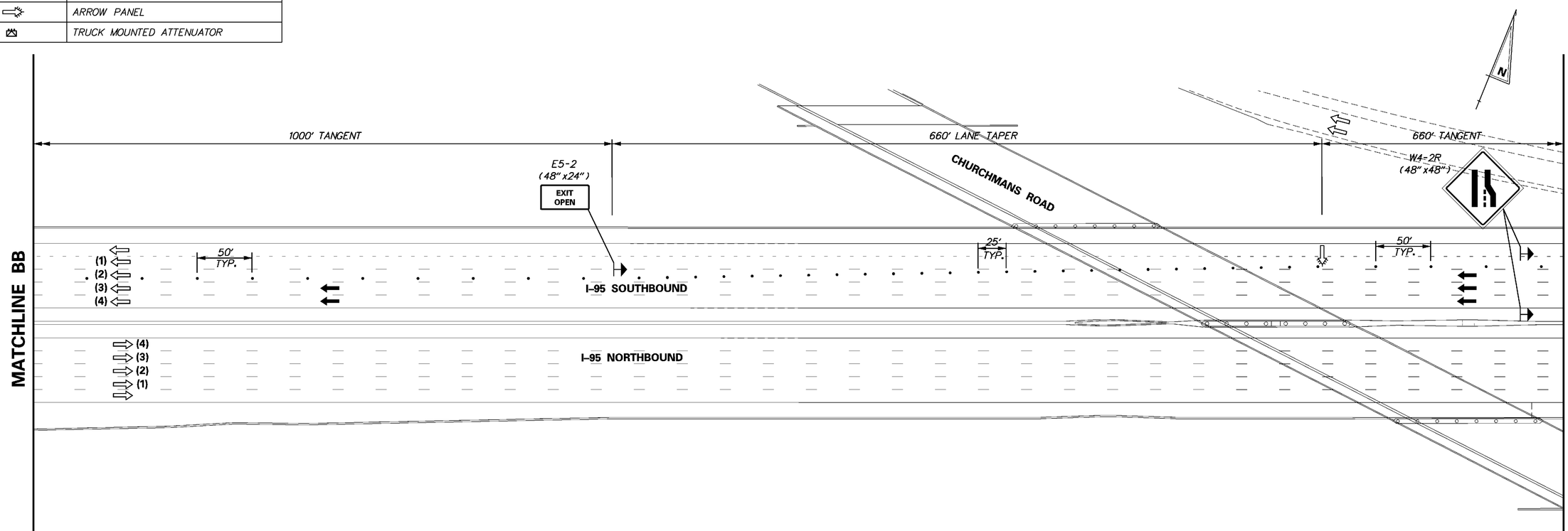

10/7/2010 12:33:40 PM
M:\PROJECTS\2003\03059_DELTRNPK\SRIMALL\CADD\3009004\PLANS\CS29_RAMPR1.DGN

DELAWARE DEPARTMENT OF TRANSPORTATION

ADDENDUMS / REVISIONS

SCALE 0 50 100 150 FEET

SR1/I-95 INTERCHANGE - CHRISTIANA MALL ROAD BRIDGE

CONTRACT	BRIDGE NO.	1-716
T201009004	DESIGNED BY:	EDJ
COUNTY		
NEW CASTLE	CHECKED BY:	CDW

CONSTRUCTION PHASING AND M.O.T. PLAN BRIDGE 1-716 DECK LANE 2 WORK ZONE

SHEET NO.
124T
TOTAL SHTS.
164

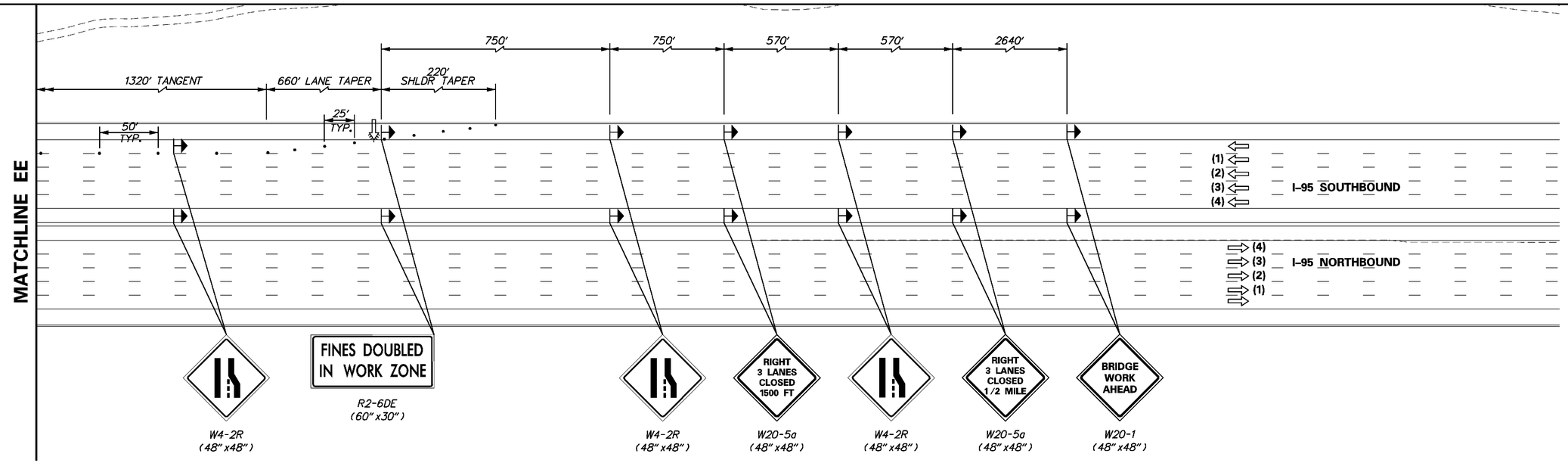

CONSTRUCTION PHASING LEGEND	
	WORK AREA THIS PHASE
	BUFFER ZONE
	PHASING TRAFFIC FLOW ARROW
	WARNING SIGN
	PLASTIC DRUM
	ARROW PANEL
	TRUCK MOUNTED ATTENUATOR

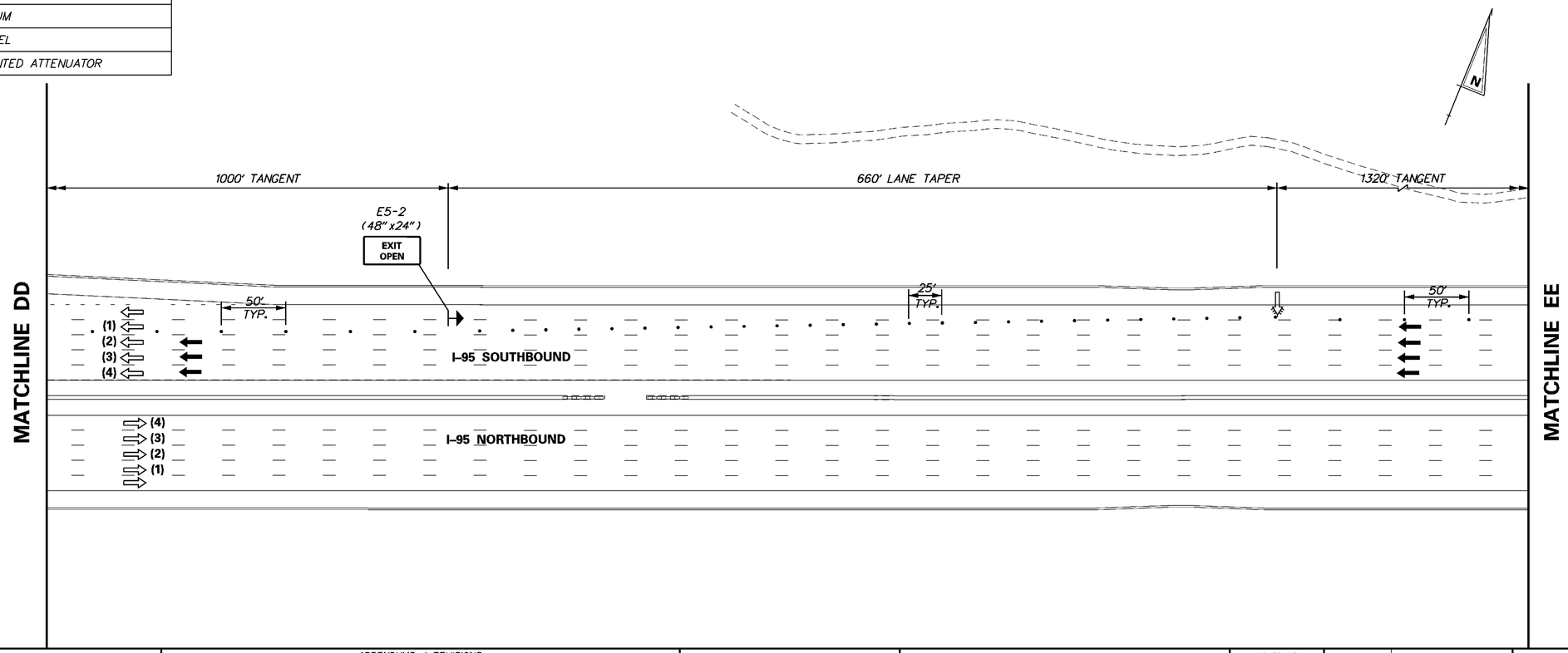

DELAWARE DEPARTMENT OF TRANSPORTATION

ADDENDUMS / REVISIONS

SCALE 0 50 100 150 FEET

SR1/I-95 INTERCHANGE - CHRISTIANA MALL ROAD BRIDGE

CONTRACT	BRIDGE NO.	1-716
T201009004	DESIGNED BY:	EDJ
COUNTY		
NEW CASTLE	CHECKED BY:	CDW

CONSTRUCTION PHASING AND M.O.T. PLAN BRIDGE 1-716 DECK LANE 2 WORK ZONE

SHEET NO. 124U

TOTAL SHTS. 164

10/7/2010 12:34:26 PM
M:\PROJECTS\2003\03059_DELTRNPK\SRIMALL\CADD\3009004\PLANS\CS30_RAMPR1.DGN

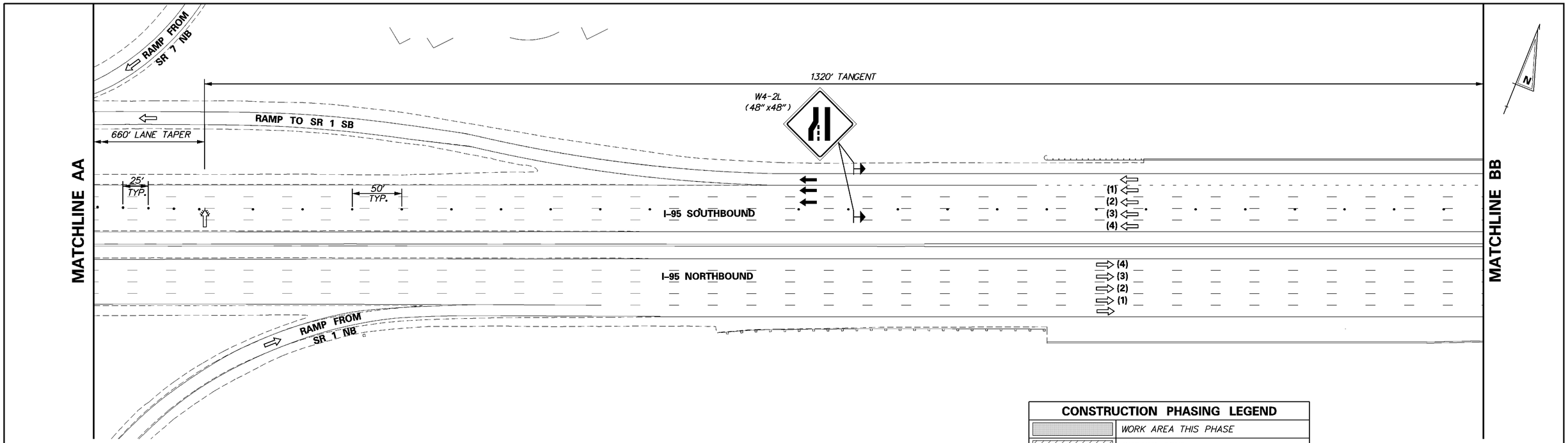

CONSTRUCTION PHASING LEGEND	
	WORK AREA THIS PHASE
	BUFFER ZONE
	PHASING TRAFFIC FLOW ARROW
	WARNING SIGN
	PLASTIC DRUM
	ARROW PANEL
	TRUCK MOUNTED ATTENUATOR

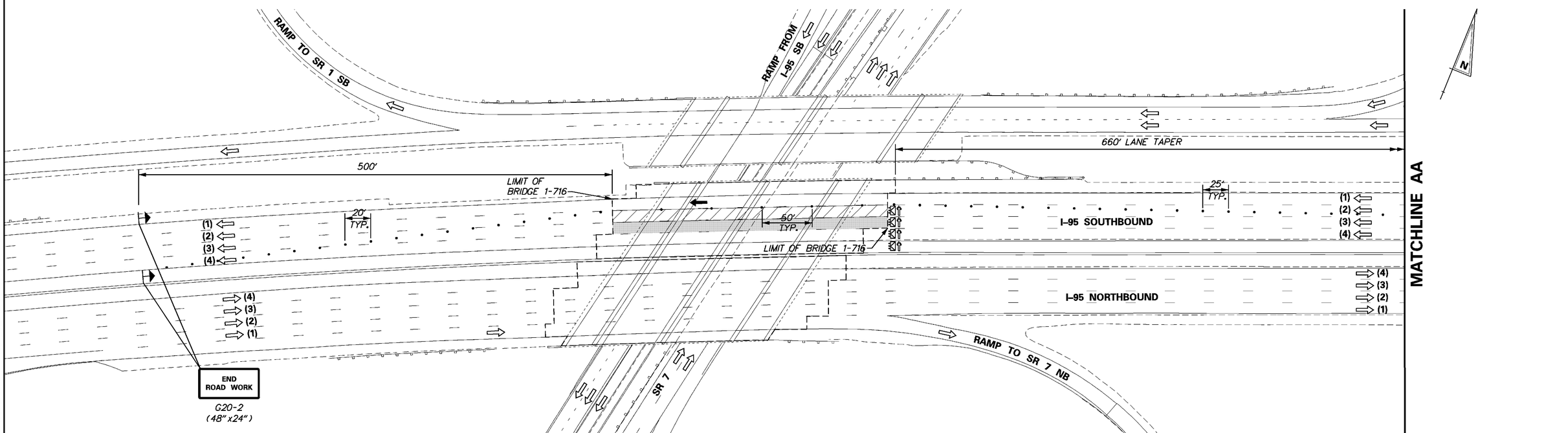

10/7/2010 12:37:07 PM
M:\PROJECTS\2003\03059_DELTRNPK\SRTMALL\CADD\3009004\PLANS\CS31_RAMPR1.DGN

DELAWARE DEPARTMENT OF TRANSPORTATION

ADDENDUMS / REVISIONS

SCALE 0 50 100 150 FEET

SR1/I-95 INTERCHANGE - CHRISTIANA MALL ROAD BRIDGE

CONTRACT	BRIDGE NO.	1-716
T201009004	DESIGNED BY:	EDJ
COUNTY		
NEW CASTLE	CHECKED BY:	CDW

CONSTRUCTION PHASING AND M.O.T. PLAN BRIDGE 1-716 DECK LANE 3 WORK ZONE

SHEET NO.
124V
TOTAL SHTS.
164

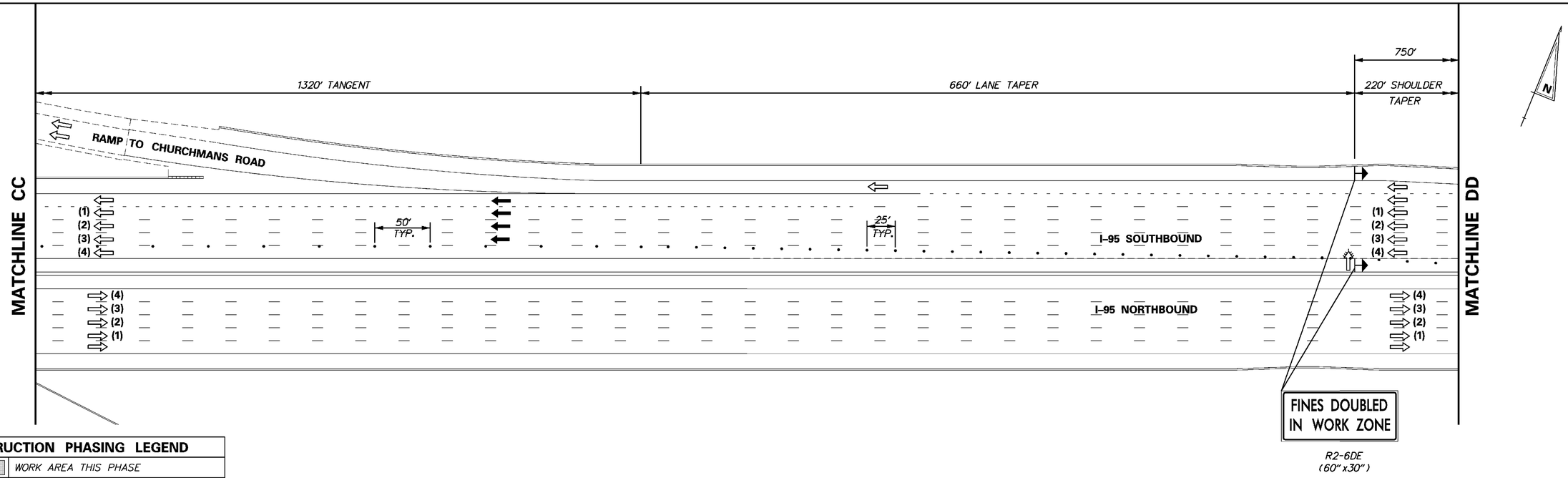

CONSTRUCTION PHASING LEGEND	
	WORK AREA THIS PHASE
	BUFFER ZONE
	PHASING TRAFFIC FLOW ARROW
	WARNING SIGN
	PLASTIC DRUM
	ARROW PANEL
	TRUCK MOUNTED ATTENUATOR

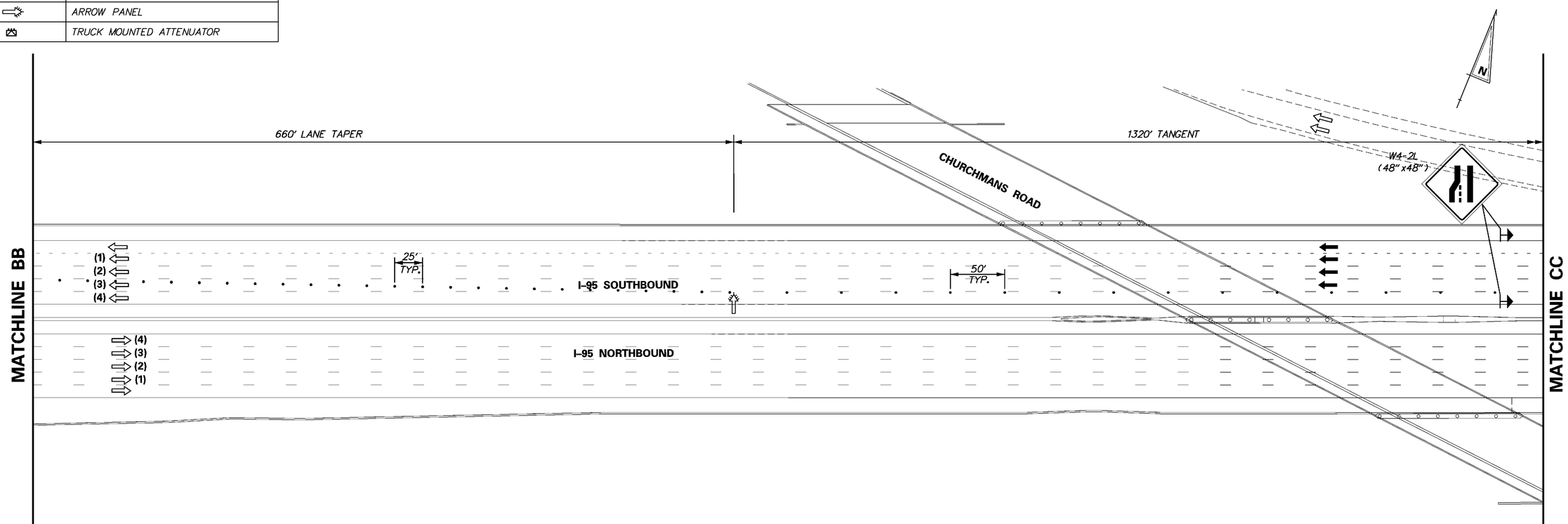

10/7/2010 12:38:08 PM
M:\PROJECTS\2003\03059_DELTRNPK\SRIMALL\CADD\3009004\PLANS\CS32_RAMPR1.DGN

DELAWARE DEPARTMENT OF TRANSPORTATION

ADDENDUMS / REVISIONS

SCALE 0 50 100 150 FEET

SR1/I-95 INTERCHANGE - CHRISTIANA MALL ROAD BRIDGE

CONTRACT	BRIDGE NO.	1-716
T201009004	DESIGNED BY:	EDJ
COUNTY		
NEW CASTLE	CHECKED BY:	CDW

CONSTRUCTION PHASING AND M.O.T. PLAN BRIDGE 1-716 DECK LANE 3 WORK ZONE

SHEET NO.
124W
TOTAL SHTS.
164

CONSTRUCTION PHASING LEGEND	
	WORK AREA THIS PHASE
	BUFFER ZONE
	PHASING TRAFFIC FLOW ARROW
	WARNING SIGN
	PLASTIC DRUM
	ARROW PANEL
	TRUCK MOUNTED ATTENUATOR

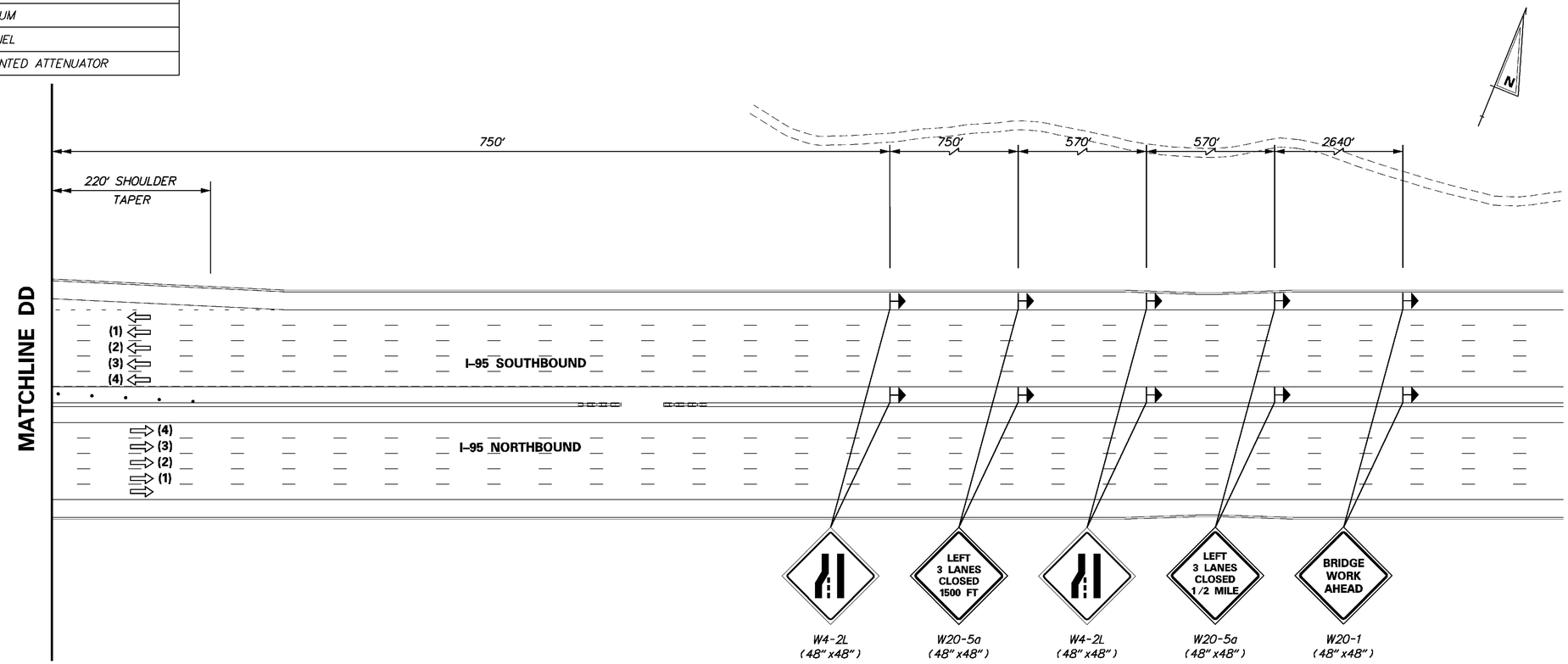

10/7/2010 12:40:00 PM
M:\PROJECTS\2003\03059_DELTRNPK\SRMALL\CADD\3009004\PLANS\CS33_RAMPR.DGN

DELAWARE
DEPARTMENT OF TRANSPORTATION

ADDENDUMS / REVISIONS

SCALE
0 50 100 150
FEET

SR1 /I-95 INTERCHANGE - CHRISTIANA MALL ROAD BRIDGE

CONTRACT	BRIDGE NO.	1-716
T201009004	DESIGNED BY:	EDJ
COUNTY		
NEW CASTLE	CHECKED BY:	CDW

CONSTRUCTION PHASING AND M.O.T. PLAN BRIDGE 1-716 DECK LANE 3 WORK ZONE

SHEET NO.
124X
TOTAL SHTS.
164

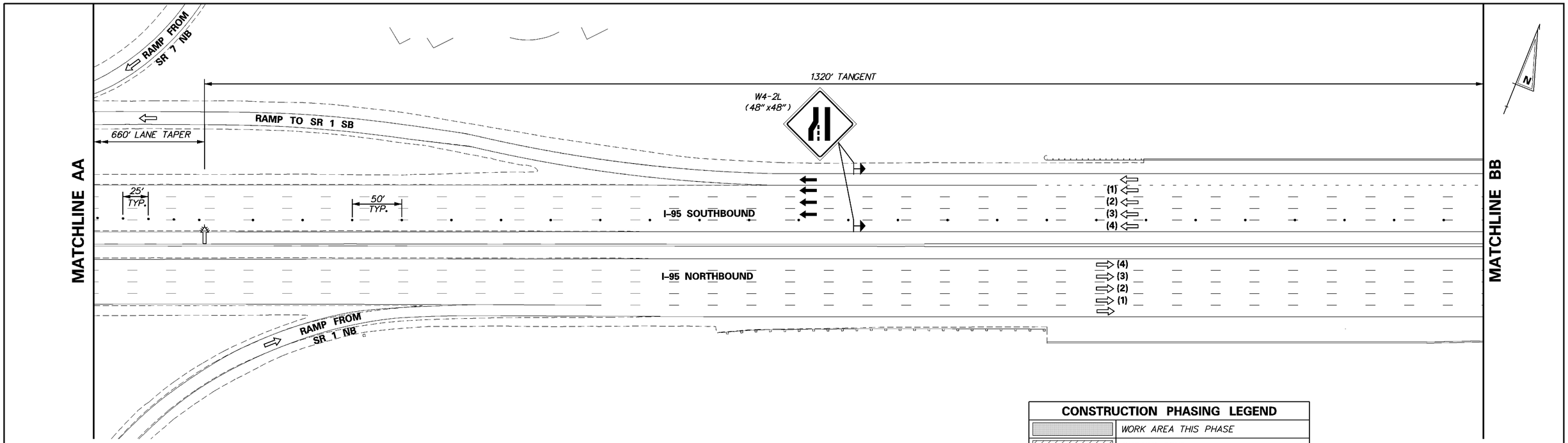

CONSTRUCTION PHASING LEGEND	
	WORK AREA THIS PHASE
	BUFFER ZONE
	PHASING TRAFFIC FLOW ARROW
	WARNING SIGN
	PLASTIC DRUM
	ARROW PANEL
	TRUCK MOUNTED ATTENUATOR

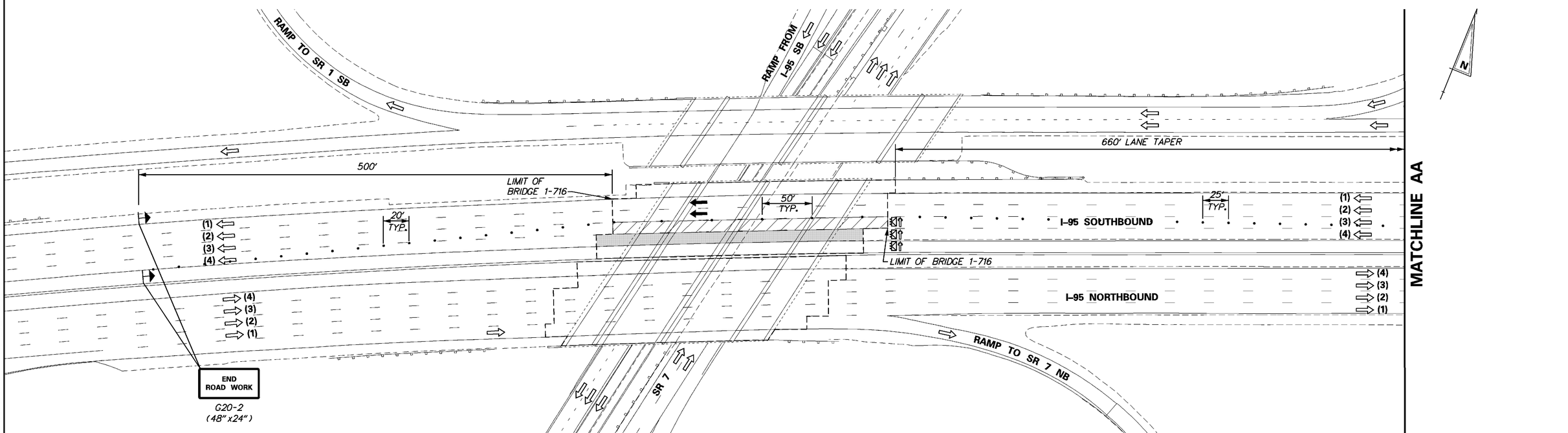

10/7/2010 12:54:29 PM
M:\PROJECTS\2003\03059_DELTRNPK\SRTMALL\CADD\3009004\PLANS\CS34_RAMPR1.DGN

DELAWARE DEPARTMENT OF TRANSPORTATION

ADDENDUMS / REVISIONS

SCALE 0 50 100 150 FEET

SR1/I-95 INTERCHANGE - CHRISTIANA MALL ROAD BRIDGE

CONTRACT	BRIDGE NO.	1-716
T201009004	DESIGNED BY:	EDJ
COUNTY		
NEW CASTLE	CHECKED BY:	CDW

CONSTRUCTION PHASING AND M.O.T. PLAN BRIDGE 1-716 DECK LANE 4 WORK ZONE

SHEET NO.
124Y
TOTAL SHTS.
164

CONSTRUCTION PHASING LEGEND	
	WORK AREA THIS PHASE
	BUFFER ZONE
	PHASING TRAFFIC FLOW ARROW
	WARNING SIGN
•	PLASTIC DRUM
	ARROW PANEL
	TRUCK MOUNTED ATTENUATOR

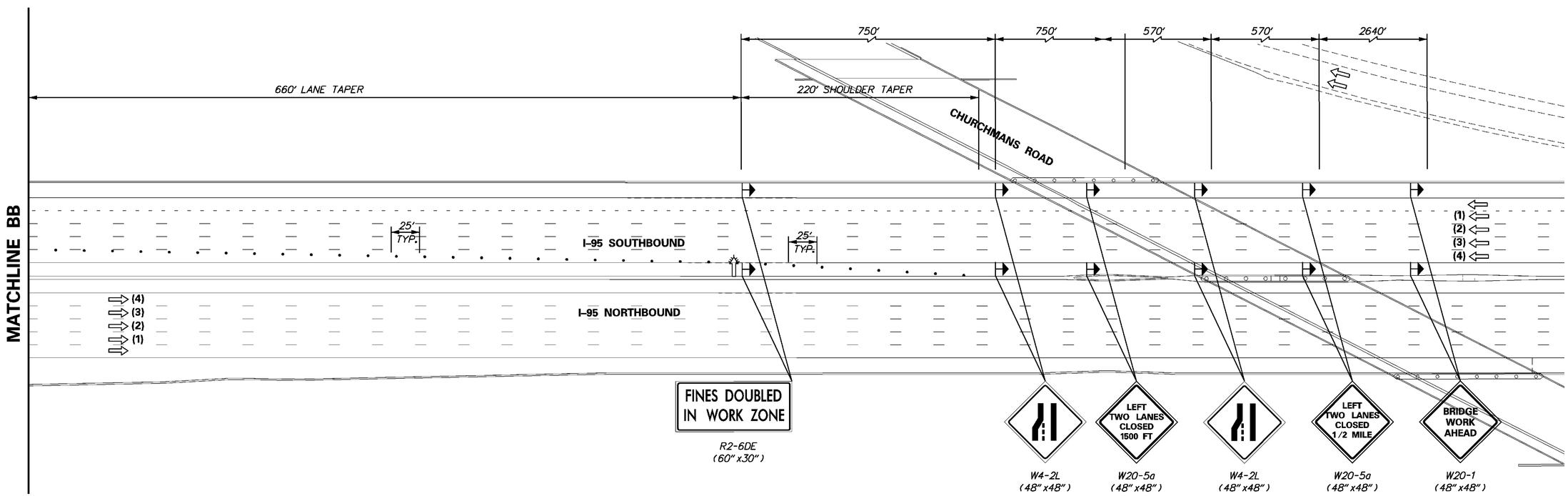

10/7/2010 1:00:37 PM
M:\PROJECTS\2003\03059_DELTRNPK\SR1MALL\CADD\3009004\PLANS\CS35_RAMPR1.DGN

DELAWARE DEPARTMENT OF TRANSPORTATION	ADDENDUMS / REVISIONS	SCALE 0 50 100 150 FEET	SR1 / I-95 INTERCHANGE - CHRISTIANA MALL ROAD BRIDGE	CONTRACT T201009004	BRIDGE NO. 1-716	CONSTRUCTION PHASING AND M.O.T. PLAN BRIDGE 1-716 DECK LANE 4 WORK ZONE	SHEET NO. 124Z
				COUNTY NEW CASTLE	DESIGNED BY: EDJ		TOTAL SHTS.
					CHECKED BY: CDW		164

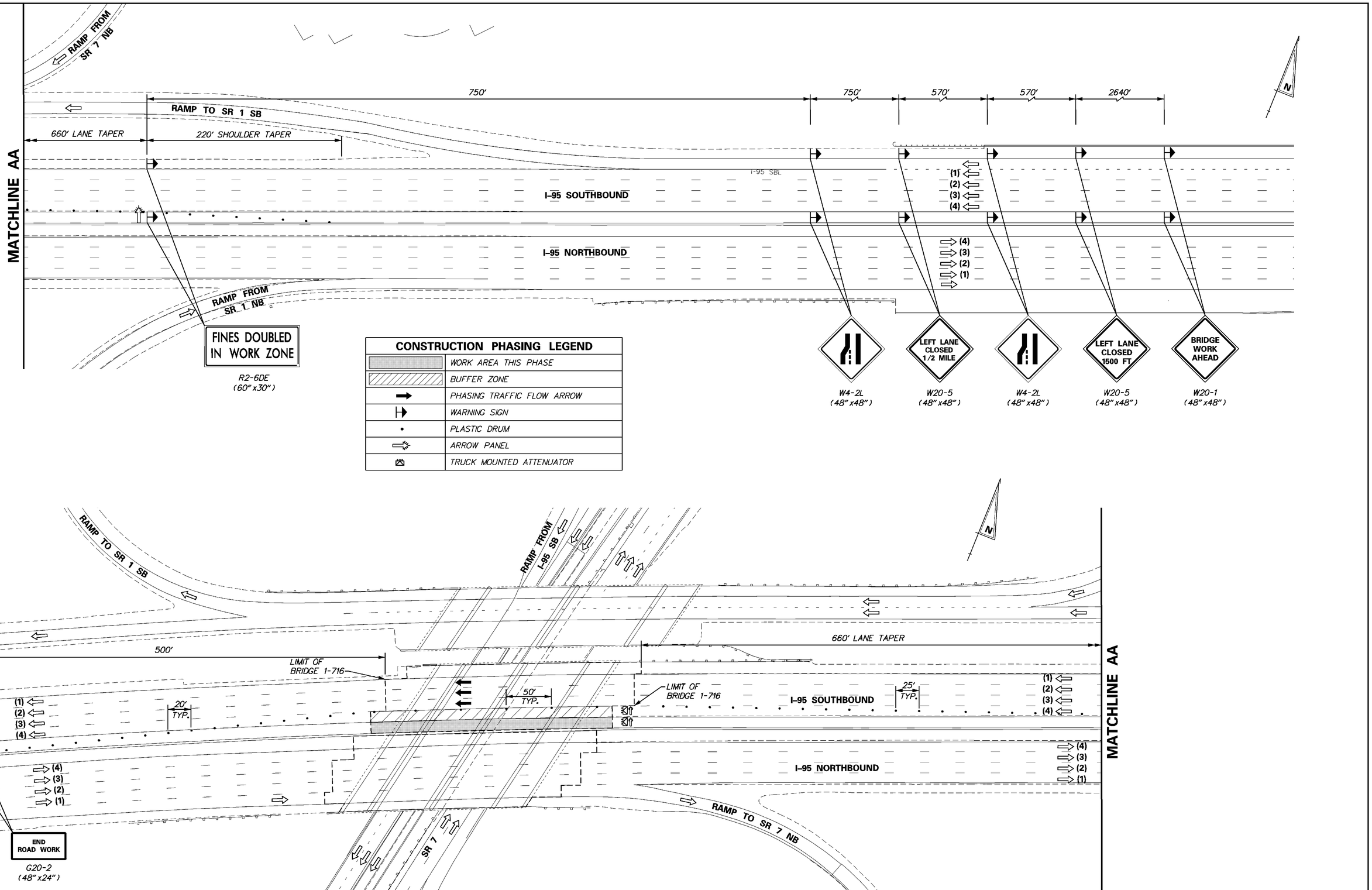

CONSTRUCTION PHASING LEGEND	
	WORK AREA THIS PHASE
	BUFFER ZONE
	PHASING TRAFFIC FLOW ARROW
	WARNING SIGN
	PLASTIC DRUM
	ARROW PANEL
	TRUCK MOUNTED ATTENUATOR

10/7/2010 1:01:11 PM
M:\PROJECTS\2003\03059_DELTRNPK\SRIMALL\CADD\3009004\PLANS\CS36_RAMPR1.DGN

DELAWARE DEPARTMENT OF TRANSPORTATION

ADDENDUMS / REVISIONS

SCALE 0 50 100 150 FEET

SR1/I-95 INTERCHANGE - CHRISTIANA MALL ROAD BRIDGE

CONTRACT	BRIDGE NO.	1-716
T201009004	DESIGNED BY:	EDJ
COUNTY		
NEW CASTLE	CHECKED BY:	CDW

CONSTRUCTION PHASING AND M.O.T. PLAN BRIDGE 1-716 DECK MEDIAN SHOULDER WORK ZONE

SHEET NO.
124AA
TOTAL SHTS.
164

CHANGEABLE MESSAGE BOARDS

PRIOR TO DETOUR
(10 DAYS PRIOR TO BEGINNING OF DETOUR)

CMS-1

SR 1 NB CLOSING AT MALL	STARTING XX/XX/XX XXPM-XAM

DURING DETOUR

CMS-1

SR 1 NB CLOSED AT MALL	FOLLOW SR 273 DETOUR

ADDITIONAL NOTES:

1. SIGNS PLACED ON ROADWAYS WITH MORE THAN ONE LANE IN ONE DIRECTION SHALL BE POSTED ON BOTH THE LEFT AND RIGHT SHOULDERS.
2. USE CASE 7 OF THE DE MUTCD TO CLOSE LANES PRIOR TO ROAD CLOSURES.
3. MAINTAIN A SINGLE LANE ON NORTHBOUND SR 1 BETWEEN SR 273 AND MALL ROAD.
4. ALL SIGNS SHOWN ON THIS SHEET, EXCLUDING CHANGEABLE MESSAGE BOARDS, SHALL BE PAID FOR UNDER ITEM 743544, WARNING SIGNS, PERMANENT, AND SHALL BE LEFT IN PLACE AND BECOME THE PROPERTY OF THE T200809003 CONTRACTOR AT THE END OF THE PROJECT.
5. ALL BARRICADES SHOWN ON THIS SHEET SHALL BE PAID FOR UNDER ITEM 743524, TEMPORARY BARRICADES, TYPE III, AND SHALL BE LEFT IN PLACE AND BECOME THE PROPERTY OF THE T200809003 CONTRACTOR AT THE END OF THE PROJECT.

SPECIAL SIGNS

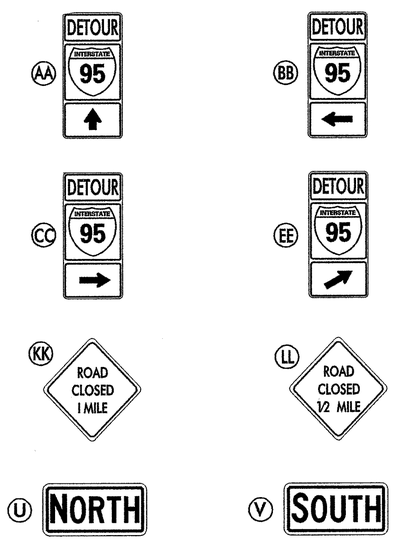

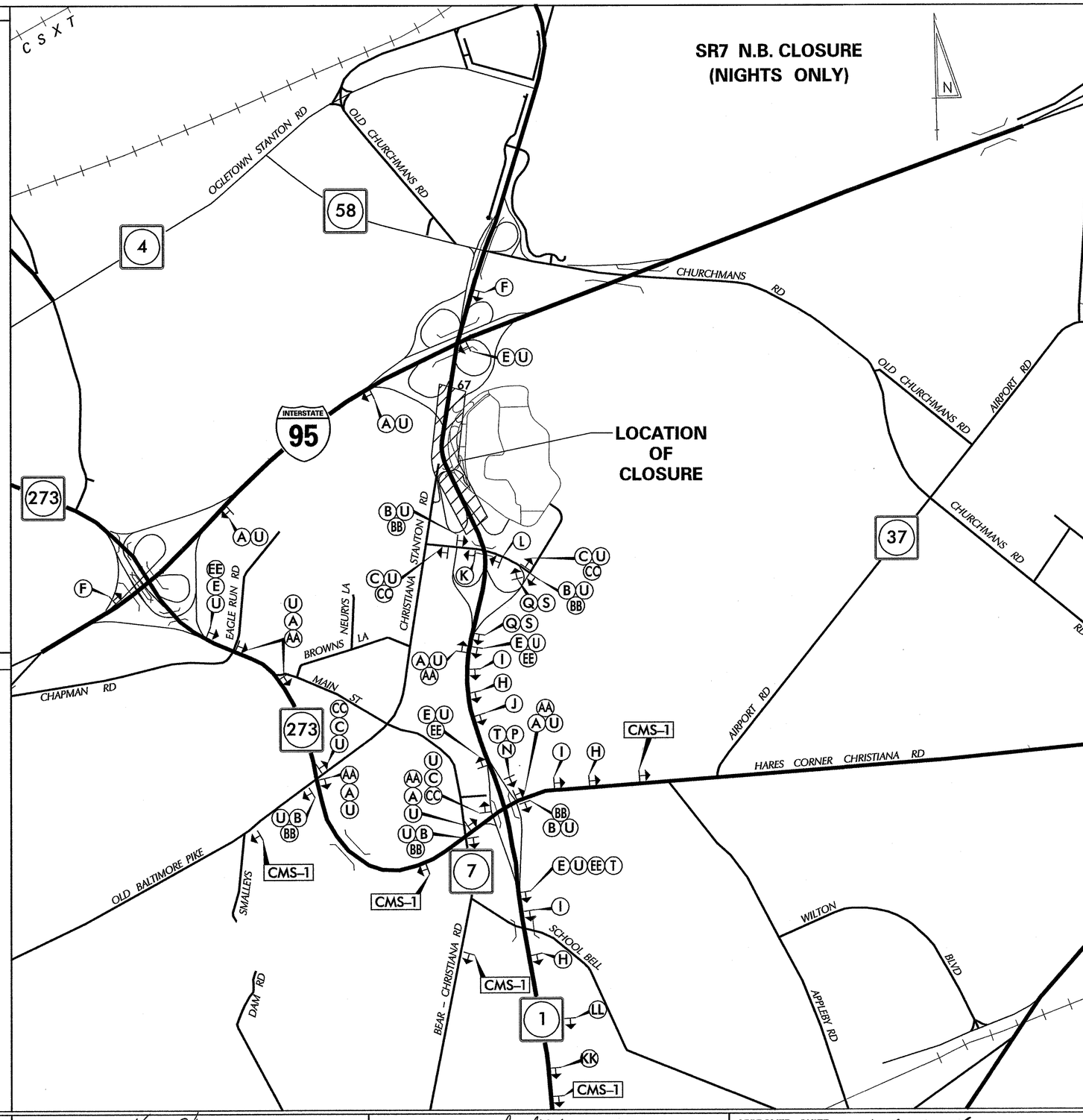

LEGEND

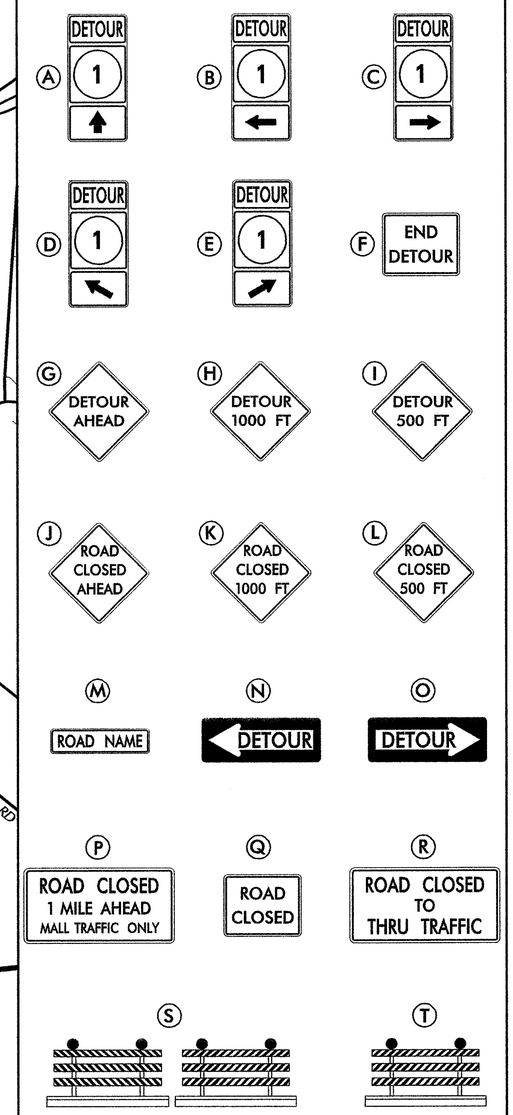

GENERAL NOTES

1. ALL DETOUR SIGNING INCLUDING, TRAILBLAZERS, ARE TO BE SUPPLIED AND MAINTAINED BY THE GENERAL CONTRACTOR IN COMPLIANCE TO THE DE MANUALOF UNIFORM TRAFFIC CONTROL DEVICES.
2. THE CONTRACTOR SHALL COMPLY WITH GUIDELINES IN "THE DELAWARE MANUAL ON UNIFORM TRAFFIC CONTROL DEVICES (DE- MUTCD PART 6) FOR LIGHTS, BARRICADES AND SIGNS.(AS PER LATEST REVISION)
3. FIELD CONDITIONS MAY DICTATE CHANGES AT SOME TIME DURING THE LIFE OF THE CONTRACT. IN THE EVENT OF OMISSIONS OR CORRECTIONS, THE SIGNING PROVISIONS OF THE DELAWARE MANUAL ON UNIFORM TRAFFIC CONTROL DEVICES WILL PREVAIL.
4. SIGNS J THROUGH L AND P THROUGH R ,THE WORD (ROAD) SHOULD BE CHANGED TO RAMP, R/R OR BRIDGE WHERE APPLICABLE.
5. WARNING SIGNS SHOULD BE MOUNTED ON BREAKAWAY POSTS AND HAVE RETROREFLECTIVE FLUORESCENT SHEETING.
6. "S" BARRICADES SHALL COMPLETELY RUN THE FULL WIDTH OF ROADWAY.
7. BARRICADES SHALL BE A MINIMUM OF 6 FEET WIDE UNLESS DIRECTED BY THE ENGINEER.

RECOMMENDED _____ DATE: 8.24.10

RECOMMENDED _____ DATE: 8-26-10

RECOMMENDED _____ DATE: 8/25/10

APPROVED CHIEF SAFETY OFFICER _____ DATE: 8-26-10

APPROVED TRAFFIC ENGINEER _____ DATE: 8/26/10

DELAWARE DEPARTMENT OF TRANSPORTATION

ADDENDUM / REVISIONS

SCALE: 0 1000 2000 3000 FEET

SR1/I-95 INTERCHANGE - CHRISTIANA MALL ROAD BRIDGE

CONTRACT T201009004	BRIDGE NO.	1-223
COUNTY NEW CASTLE	DESIGNED BY: JCR	
	CHECKED BY: MCS/JAB	

DETOUR PLAN 1 SR7 N.B. CLOSURE

SHEET NO. 125

TOTAL SHTS. 164

8/23/2010 1:38:48 PM
M:\projects\2003\03059_deltrnpk\SR1Mall\Cadd\3009004\Plans\dp01_RampR1.dgn

CHANGEABLE MESSAGE BOARDS

CMS-1 — PRIOR TO DETOUR
(10 DAYS PRIOR TO BEGINNING OF DETOUR)

SR 1 SB CLOSING AT I-95	STARTING XX/XX/XX XXPM-XAM

CMS-1 — DURING DETOUR

SR 1 SB CLOSED AT I-95	FOLLOW DETOUR

CMS-2 — PRIOR TO DETOUR
(10 DAYS PRIOR TO BEGINNING OF DETOUR)

RAMP TO SR 1 SB CLOSING	STARTING XX/XX/XX XXPM-XAM

CMS-2 — DURING DETOUR

RAMP TO SR 1 SB CLOSED	USE SR 273 EXIT 3

SPECIAL SIGNS

KK — RAMP CLOSED 1 MILE

LL — RAMP CLOSED 1/2 MILE

V — SOUTH

AA — DETOUR ↑

BB — DETOUR ←

CC — DETOUR →

DD — DETOUR ↖

EE — DETOUR ↗

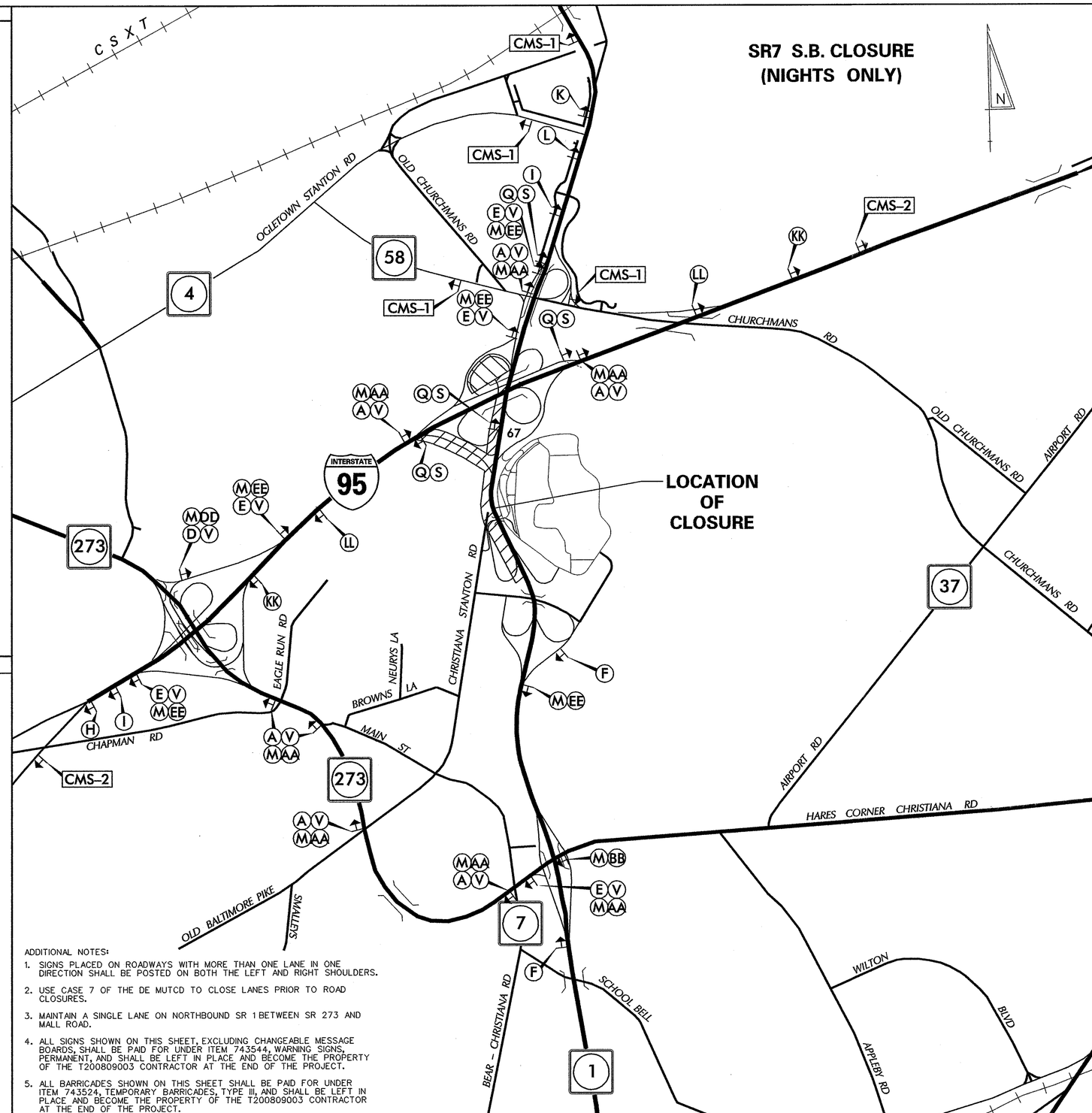

ADDITIONAL NOTES:

1. SIGNS PLACED ON ROADWAYS WITH MORE THAN ONE LANE IN ONE DIRECTION SHALL BE POSTED ON BOTH THE LEFT AND RIGHT SHOULDERS.
2. USE CASE 7 OF THE DE MUTCD TO CLOSE LANES PRIOR TO ROAD CLOSURES.
3. MAINTAIN A SINGLE LANE ON NORTHBOUND SR 1 BETWEEN SR 273 AND MALL ROAD.
4. ALL SIGNS SHOWN ON THIS SHEET, EXCLUDING CHANGEABLE MESSAGE BOARDS, SHALL BE PAID FOR UNDER ITEM 743544, WARNING SIGNS, PERMANENT, AND SHALL BE LEFT IN PLACE AND BECOME THE PROPERTY OF THE T200809003 CONTRACTOR AT THE END OF THE PROJECT.
5. ALL BARRICADES SHOWN ON THIS SHEET SHALL BE PAID FOR UNDER ITEM 743524, TEMPORARY BARRICADES, TYPE III, AND SHALL BE LEFT IN PLACE AND BECOME THE PROPERTY OF THE T200809003 CONTRACTOR AT THE END OF THE PROJECT.

LEGEND

A — DETOUR 1 ↑
B — DETOUR 1 ←
C — DETOUR 1 →
D — DETOUR 1 ↖
E — DETOUR 1 ↗
F — END DETOUR
G — DETOUR AHEAD
H — DETOUR 1000 FT
I — DETOUR 500 FT
J — ROAD CLOSED AHEAD
K — ROAD CLOSED 1000 FT
L — ROAD CLOSED 500 FT
M — MALL ROAD
N — DETOUR ←
O — DETOUR →
P — ROAD CLOSED XX MILES AHEAD LOCAL TRAFFIC ONLY
Q — ROAD CLOSED
R — ROAD CLOSED TO THRU TRAFFIC
S
T

GENERAL NOTES

1. ALL DETOUR SIGNING INCLUDING, TRAILBLAZERS, ARE TO BE SUPPLIED AND MAINTAINED BY THE GENERAL CONTRACTOR IN COMPLIANCE TO THE DE MANUAL OF UNIFORM TRAFFIC CONTROL DEVICES.
2. THE CONTRACTOR SHALL COMPLY WITH GUIDELINES IN "THE DELAWARE MANUAL ON UNIFORM TRAFFIC CONTROL DEVICES (DE- MUTCD PART 6) FOR LIGHTS, BARRICADES AND SIGNS.(AS PER LATEST REVISION)
3. FIELD CONDITIONS MAY DICTATE CHANGES AT SOME TIME DURING THE LIFE OF THE CONTRACT. IN THE EVENT OF OMISSIONS OR CORRECTIONS, THE SIGNING PROVISIONS OF THE DELAWARE MANUAL ON UNIFORM TRAFFIC CONTROL DEVICES WILL PREVAIL.
4. SIGNS J THROUGH L AND P THROUGH R ,THE WORD (ROAD) SHOULD BE CHANGED TO RAMP, R/R OR BRIDGE WHERE APPLICABLE.
5. WARNING SIGNS SHOULD BE MOUNTED ON BREAKAWAY POSTS AND HAVE RETROREFLECTIVE FLUORESCENT SHEETING.
6. "S" BARRICADES SHALL COMPLETELY RUN THE FULL WIDTH OF ROADWAY.
7. BARRICADES SHALL BE A MINIMUM OF 6 FEET WIDE UNLESS DIRECTED BY THE ENGINEER.

RECOMMENDED _____ DATE: 8.24.10	RECOMMENDED _____ DATE: 8-26-10	RECOMMENDED _____ DATE: 8/25/10	APPROVED CHIEF SAFETY OFFICER _____ DATE: 8-26-10	APPROVED TRAFFIC ENGINEER _____ DATE: 8/26/10

DELAWARE DEPARTMENT OF TRANSPORTATION

ADDENDUM / REVISIONS

SCALE: 0 1000 2000 3000 FEET

SR1 / I-95 INTERCHANGE - CHRISTIANA MALL ROAD BRIDGE

CONTRACT T201009004	BRIDGE NO. 1-223	
COUNTY NEW CASTLE	DESIGNED BY: JCR	
	CHECKED BY: MCS/JAB	

DETOUR PLAN 2 SR7 S.B. CLOSURE

SHEET NO. 126 / TOTAL SHTS. 164

8/23/2010 1:56:58 PM
M:\projects\2003\03059_deltrnpk\SR1Mall\Cadd\3009004\Plans\dp02_RampR1.dgn

CHANGEABLE MESSAGE BOARDS

PRIOR TO DETOUR
(10 DAYS PRIOR TO BEGINNING OF DETOUR)

CMS–1

MALL RD RAMP CLOSING

STARTING XX/XX

DURING DETOUR

CMS–1

MALL RD RAMP CLOSED

FOLLOW DETOUR

SPECIAL SIGNS

ADDITIONAL NOTES:

1. SIGNS PLACED ON ROADWAYS WITH MORE THAN ONE LANE IN ONE DIRECTION SHALL BE POSTED ON BOTH THE LEFT AND RIGHT SHOULDERS.
2. USE CASE 7 OF THE DE MUTCD TO CLOSE LANES PRIOR TO ROAD CLOSURES.
3. MAINTAIN A SINGLE LANE ON NORTHBOUND SR 1 BETWEEN SR 273 AND MALL ROAD.
4. ALL SIGNS SHOWN ON THIS SHEET, EXCLUDING CHANGEABLE MESSAGE BOARDS, SHALL BE PAID FOR UNDER ITEM 743544, WARNING SIGNS, PERMANENT, AND SHALL BE LEFT IN PLACE AND BECOME THE PROPERTY OF THE T200809003 CONTRACTOR AT THE END OF THE PROJECT.
5. ALL BARRICADES SHOWN ON THIS SHEET SHALL BE PAID FOR UNDER ITEM 743524, TEMPORARY BARRICADES, TYPE III, AND SHALL BE LEFT IN PLACE AND BECOME THE PROPERTY OF THE T200809003 CONTRACTOR AT THE END OF THE PROJECT.

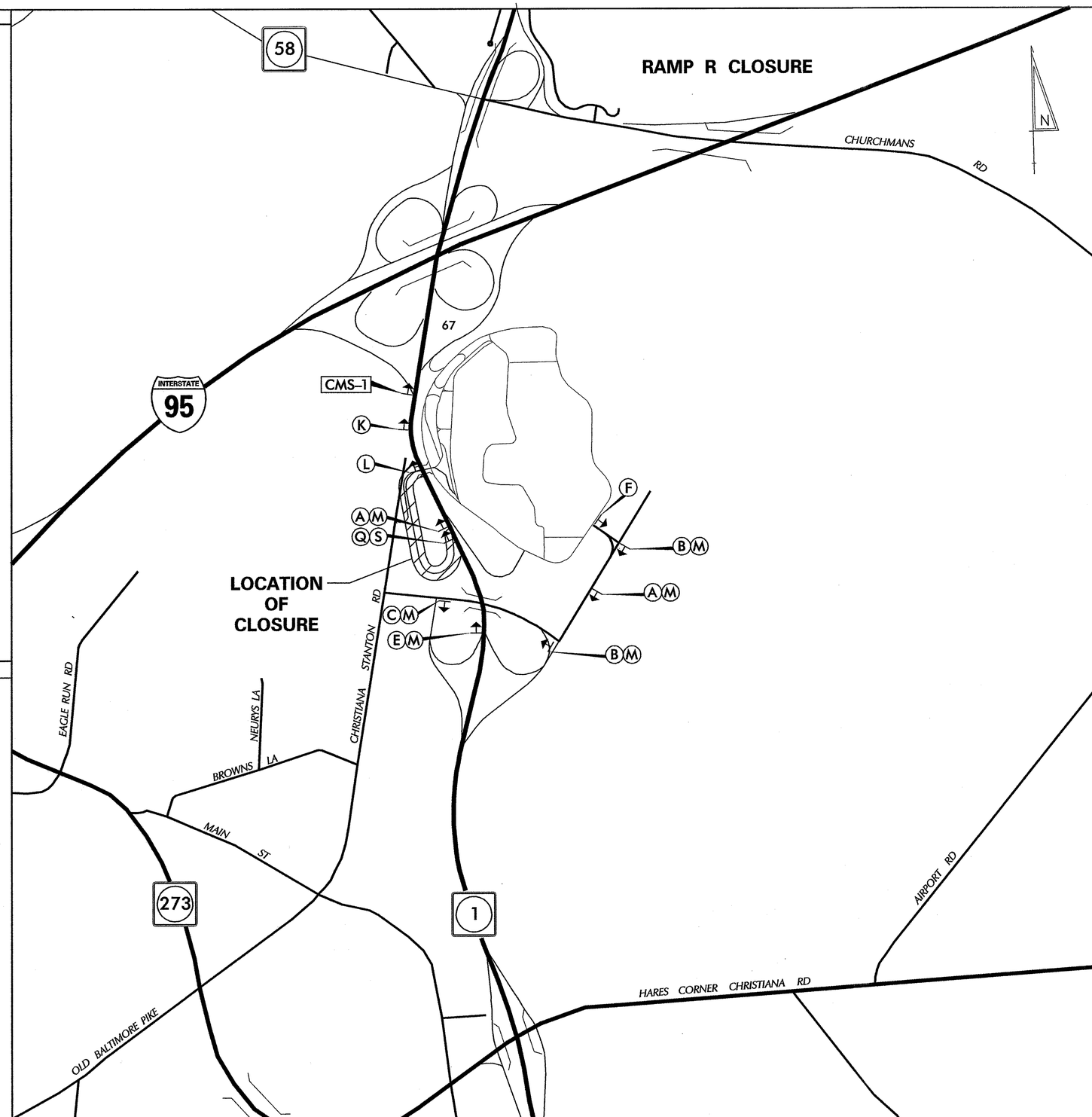

LEGEND

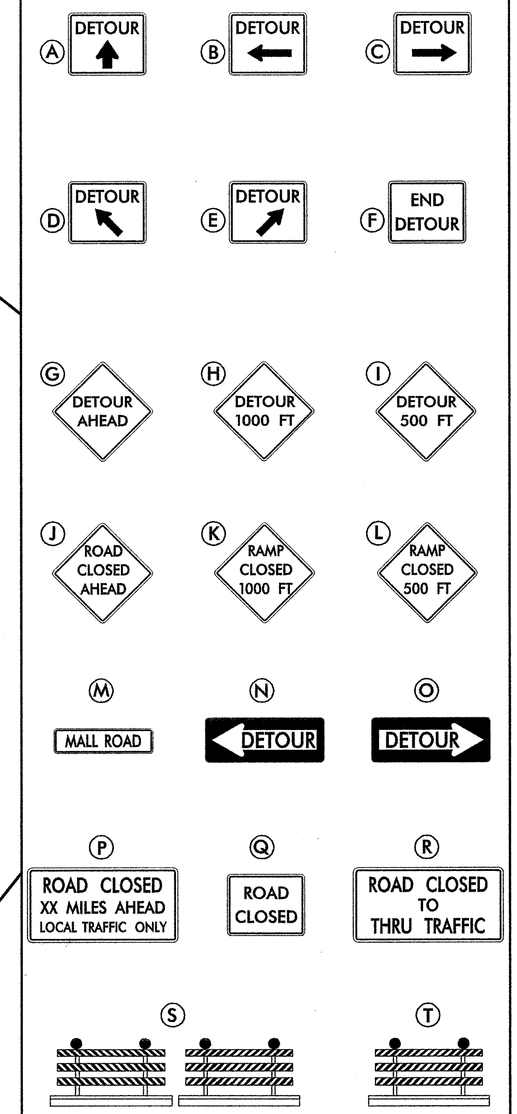

GENERAL NOTES

1. ALL DETOUR SIGNING INCLUDING, TRAILBLAZERS, ARE TO BE SUPPLIED AND MAINTAINED BY THE GENERAL CONTRACTOR IN COMPLIANCE TO THE DE MANUAL OF UNIFORM TRAFFIC CONTROL DEVICES.
2. THE CONTRACTOR SHALL COMPLY WITH GUIDELINES IN "THE DELAWARE MANUAL ON UNIFORM TRAFFIC CONTROL DEVICES (DE- MUTCD PART 6) FOR LIGHTS, BARRICADES AND SIGNS.(AS PER LATEST REVISION)
3. FIELD CONDITIONS MAY DICTATE CHANGES AT SOME TIME DURING THE LIFE OF THE CONTRACT. IN THE EVENT OF OMISSIONS OR CORRECTIONS, THE SIGNING PROVISIONS OF THE DELAWARE MANUAL ON UNIFORM TRAFFIC CONTROL DEVICES WILL PREVAIL.
4. SIGNS J THROUGH L AND P THROUGH R ,THE WORD (ROAD) SHOULD BE CHANGED TO RAMP, R/R OR BRIDGE WHERE APPLICABLE.
5. WARNING SIGNS SHOULD BE MOUNTED ON BREAKAWAY POSTS AND HAVE RETROREFLECTIVE FLUORESCENT SHEETING.
6. "S" BARRICADES SHALL COMPLETELY RUN THE FULL WIDTH OF ROADWAY.
7. BARRICADES SHALL BE A MINIMUM OF 6 FEET WIDE UNLESS DIRECTED BY THE ENGINEER.

RECOMMENDED _____ DATE: 8.24.10

RECOMMENDED _____ DATE: 8-26-10

RECOMMENDED _____ DATE: 8/25/10

APPROVED CHIEF SAFETY OFFICER _____ DATE: 8-26-10

APPROVED TRAFFIC ENGINEER _____ DATE: 8/26/10

DELAWARE DEPARTMENT OF TRANSPORTATION

ADDENDUM / REVISIONS

SCALE 0 1000 2000 3000 FEET

SR1/I-95 INTERCHANGE – CHRISTIANA MALL ROAD BRIDGE

CONTRACT	BRIDGE NO.	1-223
T201009004	DESIGNED BY:	JCR
COUNTY		
NEW CASTLE	CHECKED BY:	MCS/JAB

DETOUR PLAN 3 RAMP R CLOSURE

SHEET NO.
127
TOTAL SHTS.
164

8/23/2010 1:58:16 PM
M:\projects\2003\03059_deltrnpk\SR1Mall\Cadd\3009004\Plans\dp03_RampR1.dgn

CHANGEABLE MESSAGE BOARDS

CMS-1

PRIOR TO DETOUR
(10 DAYS PRIOR TO BEGINNING OF DETOUR)

I-95 NB RAMP CLOSING	STARTING XX/XX/XX XXPM-XAM

CMS-1

DURING DETOUR

I-95 NB RAMP CLOSED	FOLLOW DETOUR

CMS-2

PRIOR TO DETOUR
(10 DAYS PRIOR TO BEGINNING OF DETOUR)

SR 7 NB RAMP CLOSING	STARTING XX/XX/XX XXPM-XAM

CMS-2

DURING DETOUR

SR 7 NB RAMP CLOSED	FOLLOW DETOUR

SPECIAL SIGNS

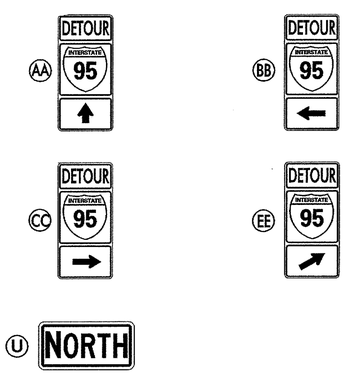

ADDITIONAL NOTES:

1. SIGNS PLACED ON ROADWAYS WITH MORE THAN ONE LANE IN ONE DIRECTION SHALL BE POSTED ON BOTH THE LEFT AND RIGHT SHOULDERS.
2. USE CASE 7 OF THE DE MUTCD TO CLOSE LANES PRIOR TO ROAD CLOSURES.
3. USE CASE 5 TO CLOSE THE NORTHBOUND I-95 RIGHT SHOULDER IN ADVANCE OF THE RAMPS TO AND FROM SR 1/SR 7. CONTINUE THE DRUMS ALONG THE DECELERATION LANE TO BEYOND THE GORE AREA. COORDINATE SHOULDER CLOSURE SIGNAGE WITH DETOUR SIGNAGE AS DIRECTED BY THE ENGINEER.

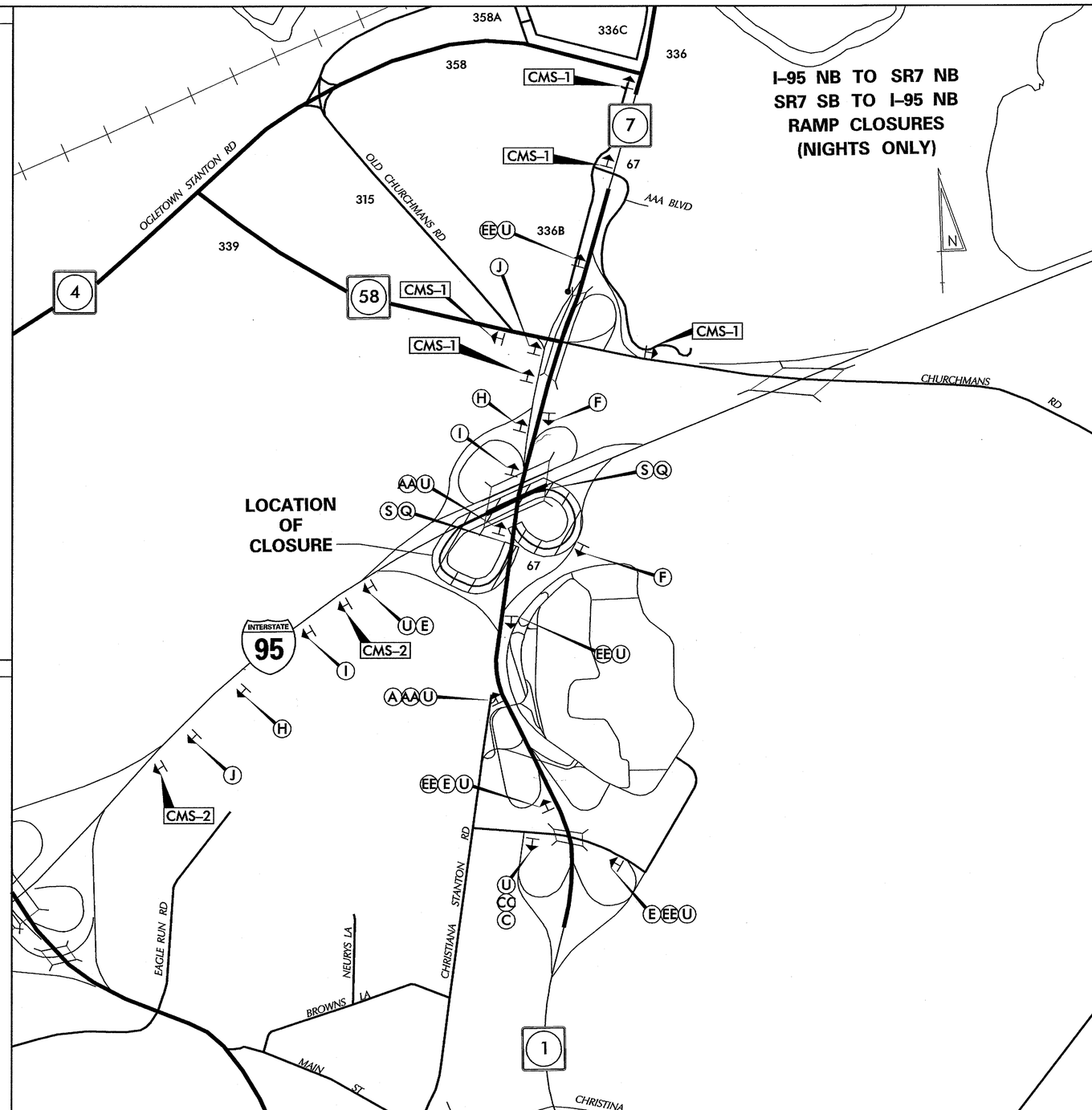

LEGEND

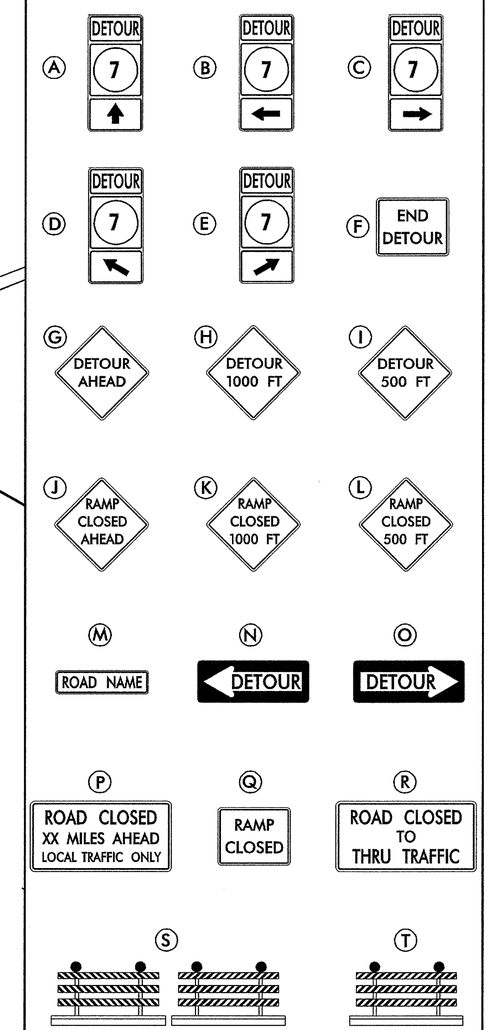

GENERAL NOTES

1. ALL DETOUR SIGNING INCLUDING, TRAILBLAZERS, ARE TO BE SUPPLIED AND MAINTAINED BY THE GENERAL CONTRACTOR IN COMPLIANCE TO THE DE MANUAL OF UNIFORM TRAFFIC CONTROL DEVICES.
2. THE CONTRACTOR SHALL COMPLY WITH GUIDELINES IN "THE DELAWARE MANUAL ON UNIFORM TRAFFIC CONTROL DEVICES (DE- MUTCD PART 6) FOR LIGHTS, BARRICADES AND SIGNS.(AS PER LATEST REVISION)
3. FIELD CONDITIONS MAY DICTATE CHANGES AT SOME TIME DURING THE LIFE OF THE CONTRACT. IN THE EVENT OF OMISSIONS OR CORRECTIONS, THE SIGNING PROVISIONS OF THE DELAWARE MANUAL ON UNIFORM TRAFFIC CONTROL DEVICES WILL PREVAIL.
4. SIGNS J THROUGH L AND P THROUGH R ,THE WORD (ROAD) SHOULD BE CHANGED TO RAMP, R/R OR BRIDGE WHERE APPLICABLE.
5. WARNING SIGNS SHOULD BE MOUNTED ON BREAKAWAY POSTS AND HAVE RETROREFLECTIVE FLUORESCENT SHEETING.
6. "S" BARRICADES SHALL COMPLETELY RUN THE FULL WIDTH OF ROADWAY.
7. BARRICADES SHALL BE A MINIMUM OF 6 FEET WIDE UNLESS DIRECTED BY THE ENGINEER.

RECOMMENDED	RECOMMENDED	RECOMMENDED	APPROVED CHIEF SAFETY OFFICER	APPROVED TRAFFIC ENGINEER
DATE:	DATE: 10-11-10	DATE: 10/11/10	DATE: 10-11-10	DATE: 10-11-10

DELAWARE DEPARTMENT OF TRANSPORTATION

ADDENDUM / REVISIONS

NOT TO SCALE

SR1/I-95 INTERCHANGE - CHRISTIANA MALL ROAD BRIDGE

CONTRACT	BRIDGE NO.	1-223
T201009004	DESIGNED BY:	JCR
COUNTY		
NEW CASTLE	CHECKED BY:	MCS/JAB

DETOUR PLAN 4
I-95 NB TO SR7 NB & SR7 SB TO I-95 NB RAMP CLOSURES

SHEET NO. 127A
TOTAL SHTS. 164

10/5/2010 12:00:57 PM
M:\projects\2003\03059_deltrmpk\SRIMall\Cadd\3009004\Plans\dp04_RampR1.dgn

CHANGEABLE MESSAGE BOARDS

PRIOR TO DETOUR
(10 DAYS PRIOR TO BEGINNING OF DETOUR)

CMS-1

I-95 SB RAMP CLOSING	STARTING XX/XX/XX XXPM-XAM

DURING DETOUR

CMS-1

I-95 SB RAMP CLOSED	FOLLOW DETOUR

PRIOR TO DETOUR
(10 DAYS PRIOR TO BEGINNING OF DETOUR)

CMS-2

SR 1 SB RAMP CLOSING	STARTING XX/XX/XX XXPM-XAM

DURING DETOUR

CMS-2

SR 1 SB RAMP CLOSED	USE SR 58 EXIT 4B

SPECIAL SIGNS

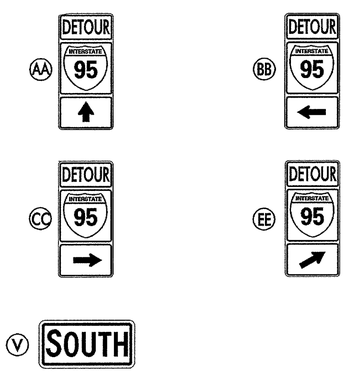

ADDITIONAL NOTES:

1. SIGNS PLACED ON ROADWAYS WITH MORE THAN ONE LANE IN ONE DIRECTION SHALL BE POSTED ON BOTH THE LEFT AND RIGHT SHOULDERS.
2. USE CASE 7 OF THE DE MUTCD TO CLOSE LANES PRIOR TO ROAD CLOSURES.
3. USE CASE 5 TO CLOSE THE SOUTHBOUND I-95 RIGHT SHOULDER IN ADVANCE OF THE RAMPS TO AND FROM SR 1/SR 7. CONTINUE THE DRUMS ALONG THE DECELERATION LANE TO BEYOND THE GORE AREA. COORDINATE SHOULDER CLOSURE SIGNAGE WITH DETOUR SIGNAGE AS DIRECTED BY THE ENGINEER.

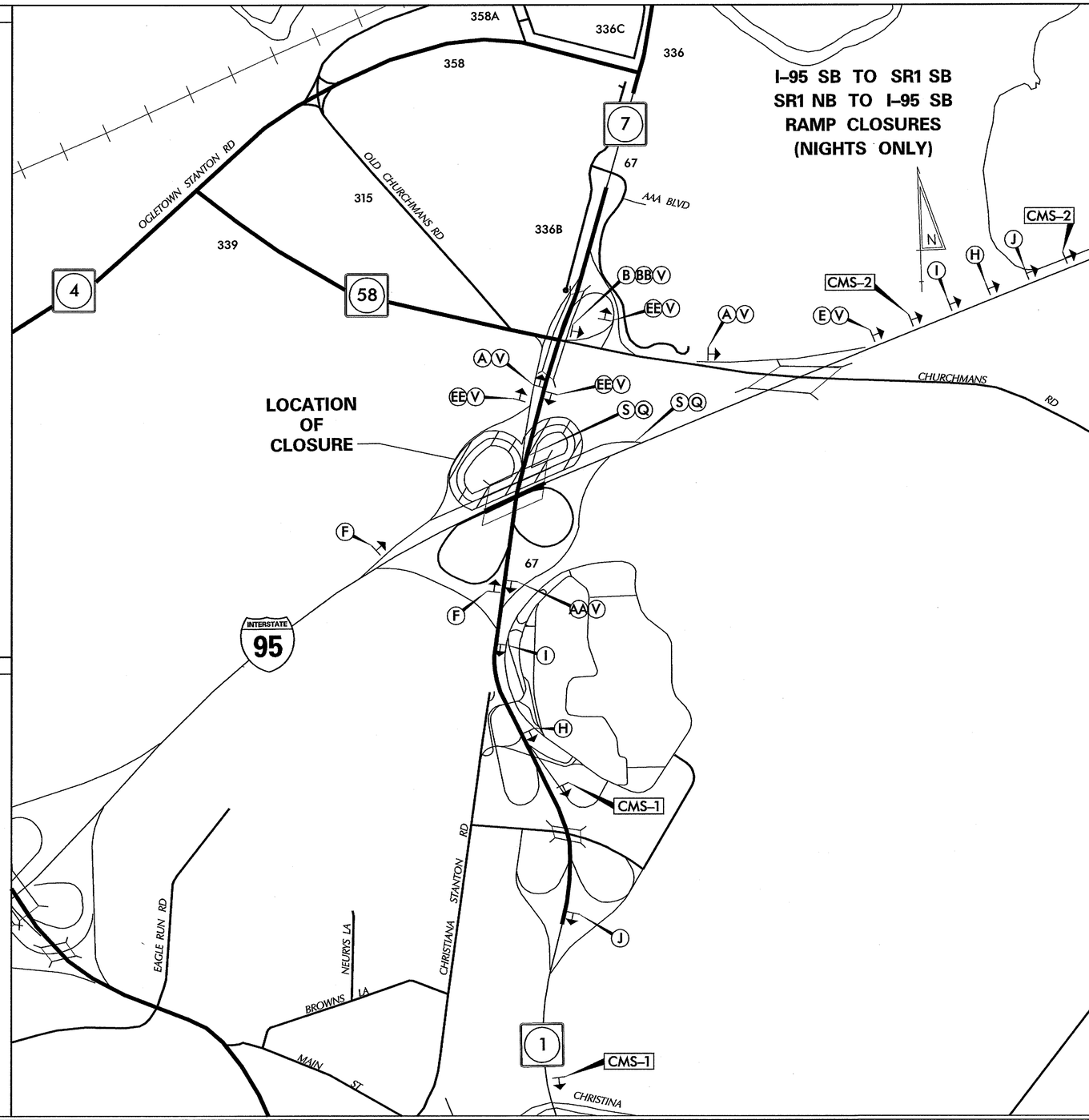

LEGEND

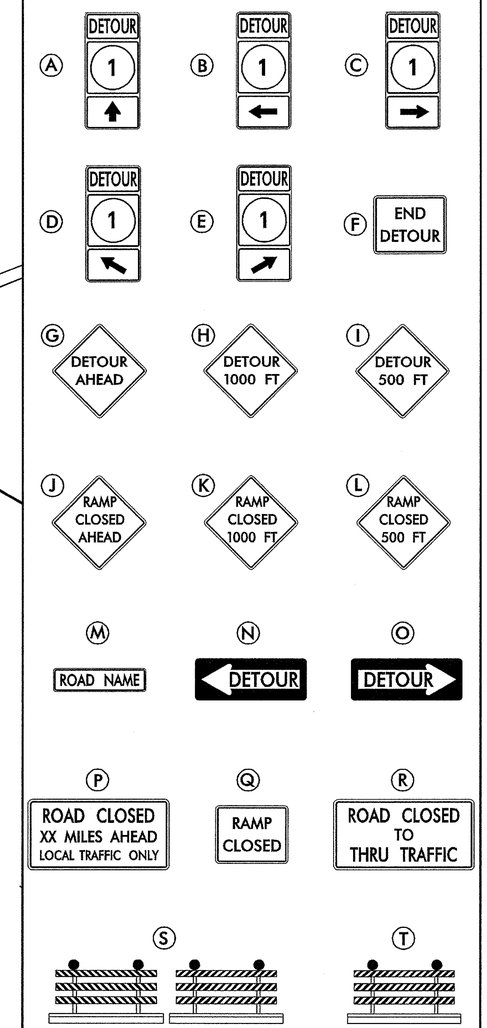

GENERAL NOTES

1. ALL DETOUR SIGNING INCLUDING, TRAILBLAZERS, ARE TO BE SUPPLIED AND MAINTAINED BY THE GENERAL CONTRACTOR IN COMPLIANCE TO THE DE MANUAL OF UNIFORM TRAFFIC CONTROL DEVICES.
2. THE CONTRACTOR SHALL COMPLY WITH GUIDELINES IN "THE DELAWARE MANUAL ON UNIFORM TRAFFIC CONTROL DEVICES (DE- MUTCD PART 6) FOR LIGHTS, BARRICADES AND SIGNS.(AS PER LATEST REVISION)
3. FIELD CONDITIONS MAY DICTATE CHANGES AT SOME TIME DURING THE LIFE OF THE CONTRACT. IN THE EVENT OF OMISSIONS OR CORRECTIONS, THE SIGNING PROVISIONS OF THE DELAWARE MANUAL ON UNIFORM TRAFFIC CONTROL DEVICES WILL PREVAIL.
4. SIGNS J THROUGH L AND P THROUGH R ,THE WORD (ROAD) SHOULD BE CHANGED TO RAMP, R/R OR BRIDGE WHERE APPLICABLE.
5. WARNING SIGNS SHOULD BE MOUNTED ON BREAKAWAY POSTS AND HAVE RETROREFLECTIVE FLUORESCENT SHEETING.
6. "S" BARRICADES SHALL COMPLETELY RUN THE FULL WIDTH OF ROADWAY.
7. BARRICADES SHALL BE A MINIMUM OF 6 FEET WIDE UNLESS DIRECTED BY THE ENGINEER.

RECOMMENDED _____ DATE: _____	RECOMMENDED _____ DATE: 10-11-10	RECOMMENDED _____ DATE: 10/11/10	APPROVED CHIEF SAFETY OFFICER _____ DATE: 10-11-10

APPROVED TRAFFIC ENGINEER _____ DATE: 10/11/10

DELAWARE DEPARTMENT OF TRANSPORTATION

ADDENDUM / REVISIONS

NOT TO SCALE

SR1/I-95 INTERCHANGE - CHRISTIANA MALL ROAD BRIDGE

CONTRACT	BRIDGE NO.	1-223	
T201009004	DESIGNED BY: JCR		
COUNTY			
NEW CASTLE	CHECKED BY: MCS/JAB		

DETOUR PLAN 5
I-95 SB TO SR1 SB &
SR1 NB TO I-95 SB
RAMP CLOSURES

SHEET NO. 127B
TOTAL SHTS. 164

10/6/2010 2:54:19 PM
M:\projects\2003\03059_deltrnpk\SRMall\Cadd\3009004\Plans\dp05_RampR1.dgn

CHANGEABLE MESSAGE BOARDS

CMS-1 — PRIOR TO DETOUR
(10 DAYS PRIOR TO BEGINNING OF DETOUR)

SR 7 NB CLOSING	STARTING XX/XX/XX XXPM-XAM

CMS-1 — DURING DETOUR

SR 7 NB CLOSED	FOLLOW DETOUR

CMS-2 — PRIOR TO DETOUR
(10 DAYS PRIOR TO BEGINNING OF DETOUR)

I-95 SB RAMP CLOSING	STARTING XX/XX/XX XXPM-XAM

CMS-2 — DURING DETOUR

I-95 SB RAMP CLOSED	FOLLOW DETOUR

SPECIAL SIGNS

AA DETOUR INTERSTATE 95 ↑
BB DETOUR INTERSTATE 95 ←
CC DETOUR INTERSTATE 95 →
EE DETOUR INTERSTATE 95 ↗
U NORTH
V SOUTH

ADDITIONAL NOTES:

1. SIGNS PLACE ON ROADWAYS WITH MORE THAN ONE LANE IN ONE DIRECTION SHALL BE POSTED ON BOTH THE LEFT AND RIGHT SHOULDERS.
2. USE CASE 7 OF THE DE MUTCD TO CLOSE LANES PRIOR TO ROAD CLOSURES.

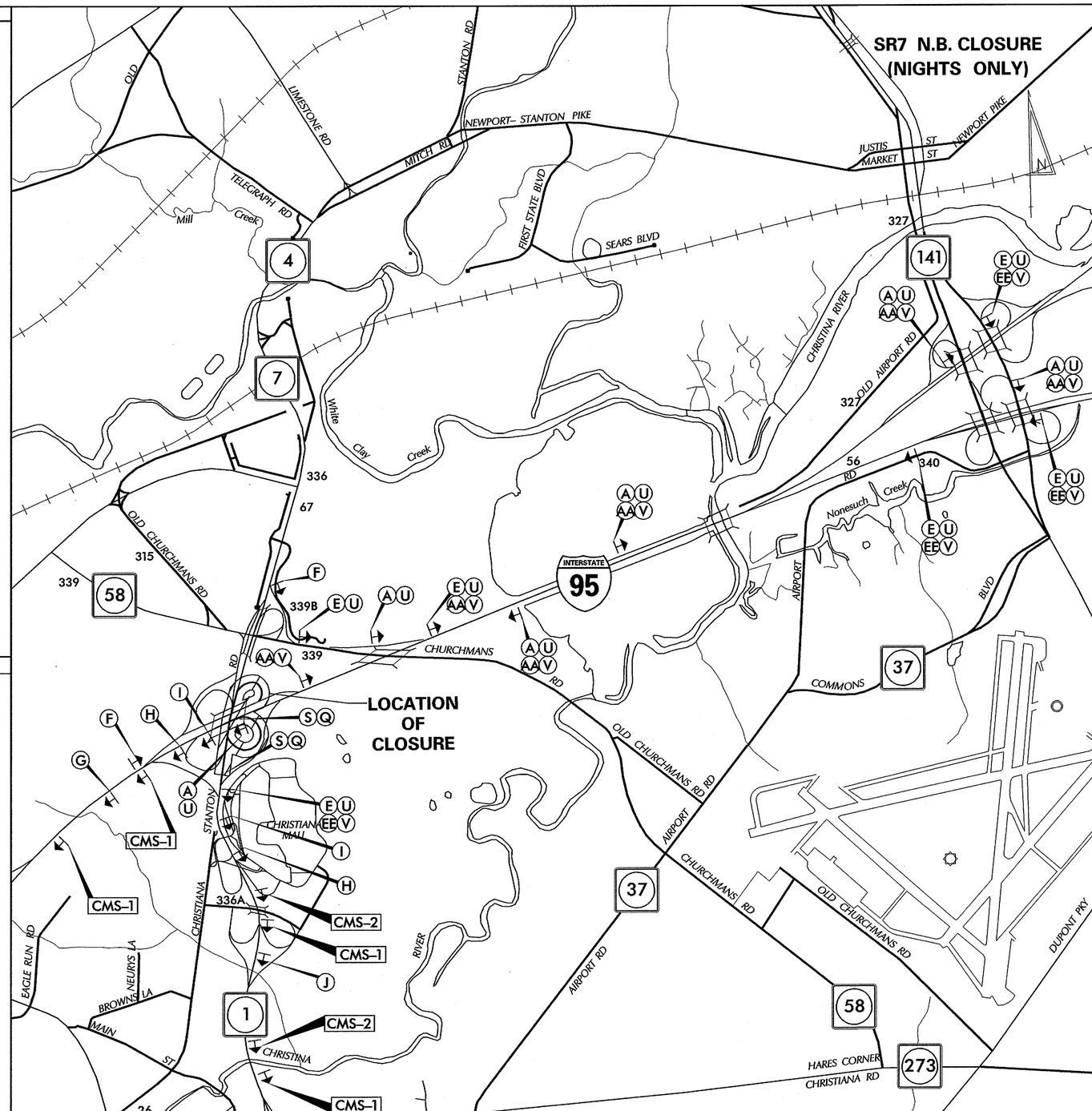

LEGEND

A DETOUR 7 ↑
B DETOUR 7 ←
C DETOUR 7 →
D DETOUR 7 ↖
E DETOUR 7 ↗
F END DETOUR
G DETOUR AHEAD
H DETOUR 1000 FT
I DETOUR 500 FT
J ROAD CLOSED AHEAD
K ROAD CLOSED 1000 FT
L ROAD CLOSED 500 FT
M ROAD NAME
N ← DETOUR
O DETOUR →
P ROAD CLOSED XX MILES AHEAD LOCAL TRAFFIC ONLY
Q ROAD CLOSED
R ROAD CLOSED TO THRU TRAFFIC
S
T

GENERAL NOTES

1. ALL DETOUR SIGNING INCLUDING, TRAILBLAZERS, ARE TO BE SUPPLIED AND MAINTAINED BY THE GENERAL CONTRACTOR IN COMPLIANCE TO THE DE MANUAL OF UNIFORM TRAFFIC CONTROL DEVICES.
2. THE CONTRACTOR SHALL COMPLY WITH GUIDELINES IN "THE DELAWARE MANUAL ON UNIFORM TRAFFIC CONTROL DEVICES (DE- MUTCD PART 6) FOR LIGHTS, BARRICADES AND SIGNS.(AS PER LATEST REVISION)
3. FIELD CONDITIONS MAY DICTATE CHANGES AT SOME TIME DURING THE LIFE OF THE CONTRACT. IN THE EVENT OF OMISSIONS OR CORRECTIONS, THE SIGNING PROVISIONS OF THE DELAWARE MANUAL ON UNIFORM TRAFFIC CONTROL DEVICES WILL PREVAIL.
4. SIGNS J THROUGH L AND P THROUGH R ,THE WORD (ROAD) SHOULD BE CHANGED TO RAMP, R/R OR BRIDGE WHERE APPLICABLE.
5. WARNING SIGNS SHOULD BE MOUNTED ON BREAKAWAY POSTS AND HAVE RETROREFLECTIVE FLUORESCENT SHEETING.
6. "S" BARRICADES SHALL COMPLETELY RUN THE FULL WIDTH OF ROADWAY.
7. BARRICADES SHALL BE A MINIMUM OF 6 FEET WIDE UNLESS DIRECTED BY THE ENGINEER.

RECOMMENDED	RECOMMENDED	RECOMMENDED	APPROVED CHIEF SAFETY OFFICER	APPROVED TRAFFIC ENGINEER
DATE:	DATE: 10-11-10	DATE: 10/11/10	DATE: 10-11-10	DATE: 10/11/10

DELAWARE DEPARTMENT OF TRANSPORTATION

ADDENDUM / REVISIONS

NOT TO SCALE

SR1 / I-95 INTERCHANGE - CHRISTIANA MALL ROAD BRIDGE

CONTRACT	BRIDGE NO.	1-223
T201009004	DESIGNED BY:	JCR
COUNTY		
NEW CASTLE	CHECKED BY:	MCS/JAB

DETOUR PLAN 6
SR7 N.B. CLOSURE

SHEET NO. 127C
TOTAL SHTS. 164

10/6/2010 2:55:20 PM
M:\PROJECTS\2003\03059_DEL TRNPK\SRIWALL\CADD\3009004\PLANS\DP06_RAMPR1.DGN

CHANGEABLE MESSAGE BOARDS

PRIOR TO DETOUR
(10 DAYS PRIOR TO BEGINNING OF DETOUR)

CMS-1

I-95 NB RAMP CLOSING	STARTING XX/XX/XX XXPM-XAM

DURING DETOUR

CMS-1

I-95 NB RAMP CLOSED	FOLLOW DETOUR

PRIOR TO DETOUR
(10 DAYS PRIOR TO BEGINNING OF DETOUR)

CMS-2

SR 1 SB RAMP CLOSING	STARTING XX/XX/XX XXPM-XAM

DURING DETOUR

CMS-2

SR 1 SB RAMP CLOSED	FOLLOW DETOUR

SPECIAL SIGNS

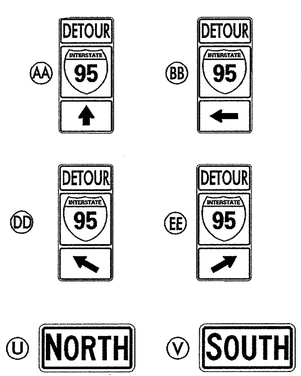

ADDITIONAL NOTES:

1. SIGNS PLACED ON ROADWAYS WITH MORE THAN ONE LANE IN ONE DIRECTION SHALL BE POSTED ON BOTH THE LEFT AND RIGHT SHOULDERS.
2. USE CASE 7 OF THE DE MUTCD TO CLOSE LANES PRIOR TO ROAD CLOSURES.

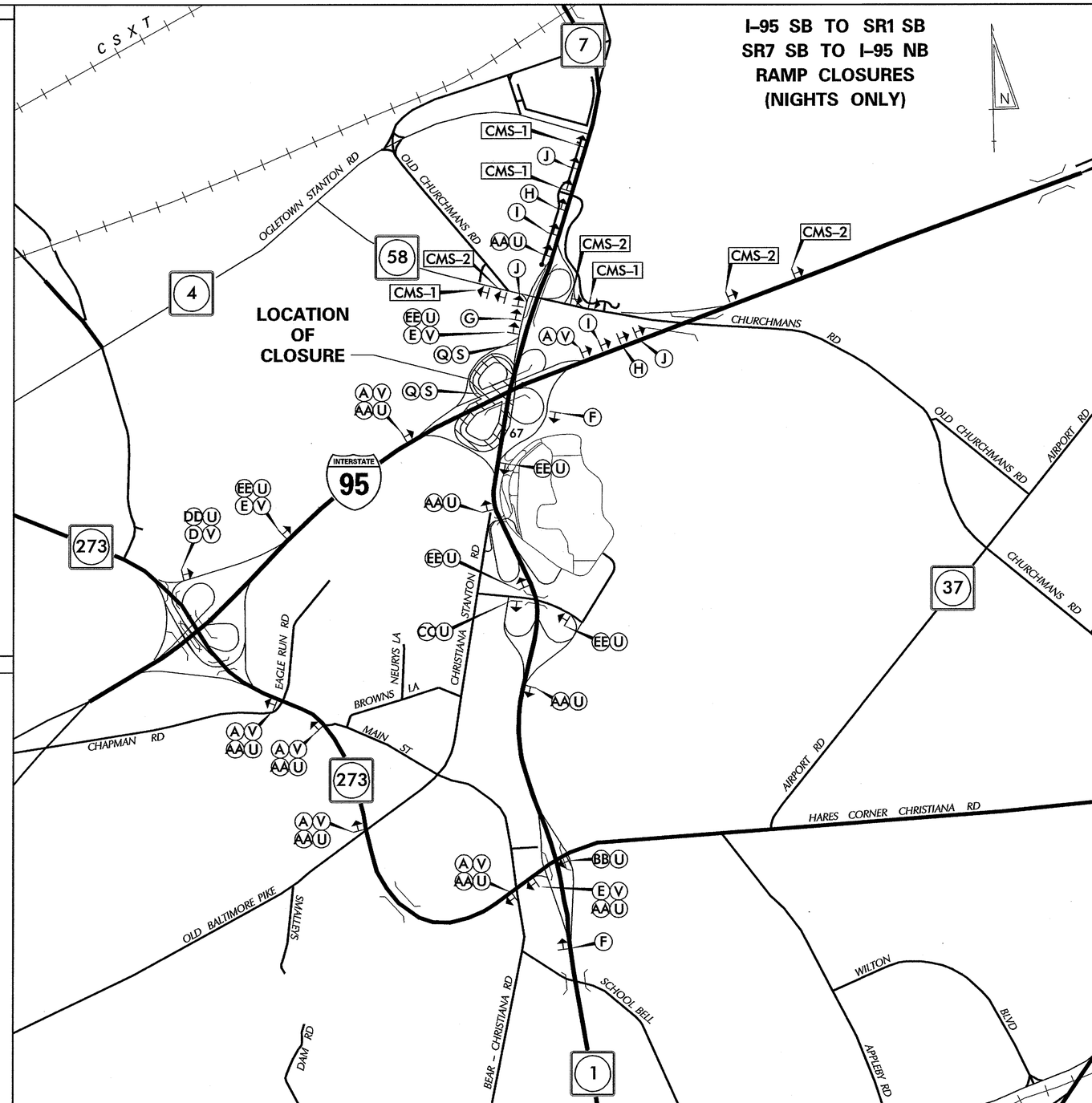

LEGEND

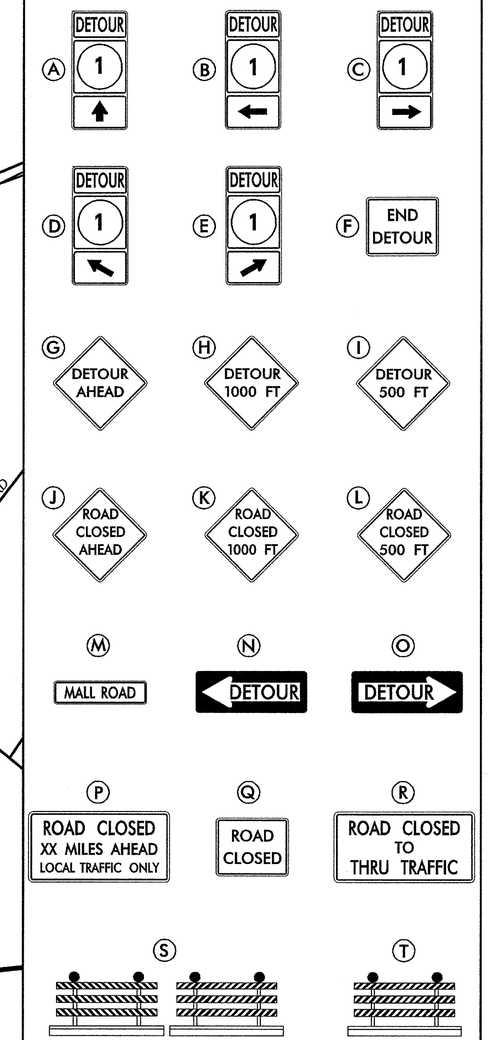

GENERAL NOTES

1. ALL DETOUR SIGNING INCLUDING, TRAILBLAZERS, ARE TO BE SUPPLIED AND MAINTAINED BY THE GENERAL CONTRACTOR IN COMPLIANCE TO THE DE MANUAL OF UNIFORM TRAFFIC CONTROL DEVICES.
2. THE CONTRACTOR SHALL COMPLY WITH GUIDELINES IN "THE DELAWARE MANUAL ON UNIFORM TRAFFIC CONTROL DEVICES (DE- MUTCD PART 6) FOR LIGHTS, BARRICADES AND SIGNS.(AS PER LATEST REVISION)
3. FIELD CONDITIONS MAY DICTATE CHANGES AT SOME TIME DURING THE LIFE OF THE CONTRACT. IN THE EVENT OF OMISSIONS OR CORRECTIONS, THE SIGNING PROVISIONS OF THE DELAWARE MANUAL ON UNIFORM TRAFFIC CONTROL DEVICES WILL PREVAIL.
4. SIGNS J THROUGH L AND P THROUGH R ,THE WORD (ROAD) SHOULD BE CHANGED TO RAMP, R/R OR BRIDGE WHERE APPLICABLE.
5. WARNING SIGNS SHOULD BE MOUNTED ON BREAKAWAY POSTS AND HAVE RETROREFLECTIVE FLUORESCENT SHEETING.
6. "S" BARRICADES SHALL COMPLETELY RUN THE FULL WIDTH OF ROADWAY.
7. BARRICADES SHALL BE A MINIMUM OF 6 FEET WIDE UNLESS DIRECTED BY THE ENGINEER.

RECOMMENDED _____ DATE: _____	RECOMMENDED _____ DATE: 10-11-10	RECOMMENDED _____ DATE: 10/11/10	APPROVED CHIEF SAFETY OFFICER _____ DATE: 10-11-10	APPROVED TRAFFIC ENGINEER _____ DATE: 10/11/10

DELAWARE DEPARTMENT OF TRANSPORTATION

ADDENDUM / REVISIONS

NOT TO SCALE

SR1/I-95 INTERCHANGE - CHRISTIANA MALL ROAD BRIDGE

CONTRACT	BRIDGE NO.	1-223
T201009004	DESIGNED BY: JCR	
COUNTY		
NEW CASTLE	CHECKED BY: MCS/JAB	

DETOUR PLAN 7
I-95 SB TO SR 1 SB &
SR7 SB TO I-95 NB
RAMP CLOSURES

SHEET NO.	127D
TOTAL SHTS.	164

10/7/2010 4:36:42 PM
M:\projects\2003\03059_deltrnpk\SR1Mall\Cadd\3009004\Plans\dp07_RampR1.dgn

CHANGEABLE MESSAGE BOARDS

PRIOR TO DETOUR
(10 DAYS PRIOR TO BEGINNING OF DETOUR)

CMS–1

SR 1 SB CLOSING	STARTING XX/XX/XX XXPM–XAM

DURING DETOUR

CMS–1

SR 1 SB CLOSED	FOLLOW DETOUR

SPECIAL SIGNS

Ⓥ SOUTH

ADDITIONAL NOTES:

1. SIGNS PLACED ON ROADWAYS WITH MORE THAN ONE LANE IN ONE DIRECTION SHALL BE POSTED ON BOTH THE LEFT AND RIGHT SHOULDERS.
2. USE CASE 7 OF THE DE MUTCD TO CLOSE LANES PRIOR TO ROAD CLOSURES.

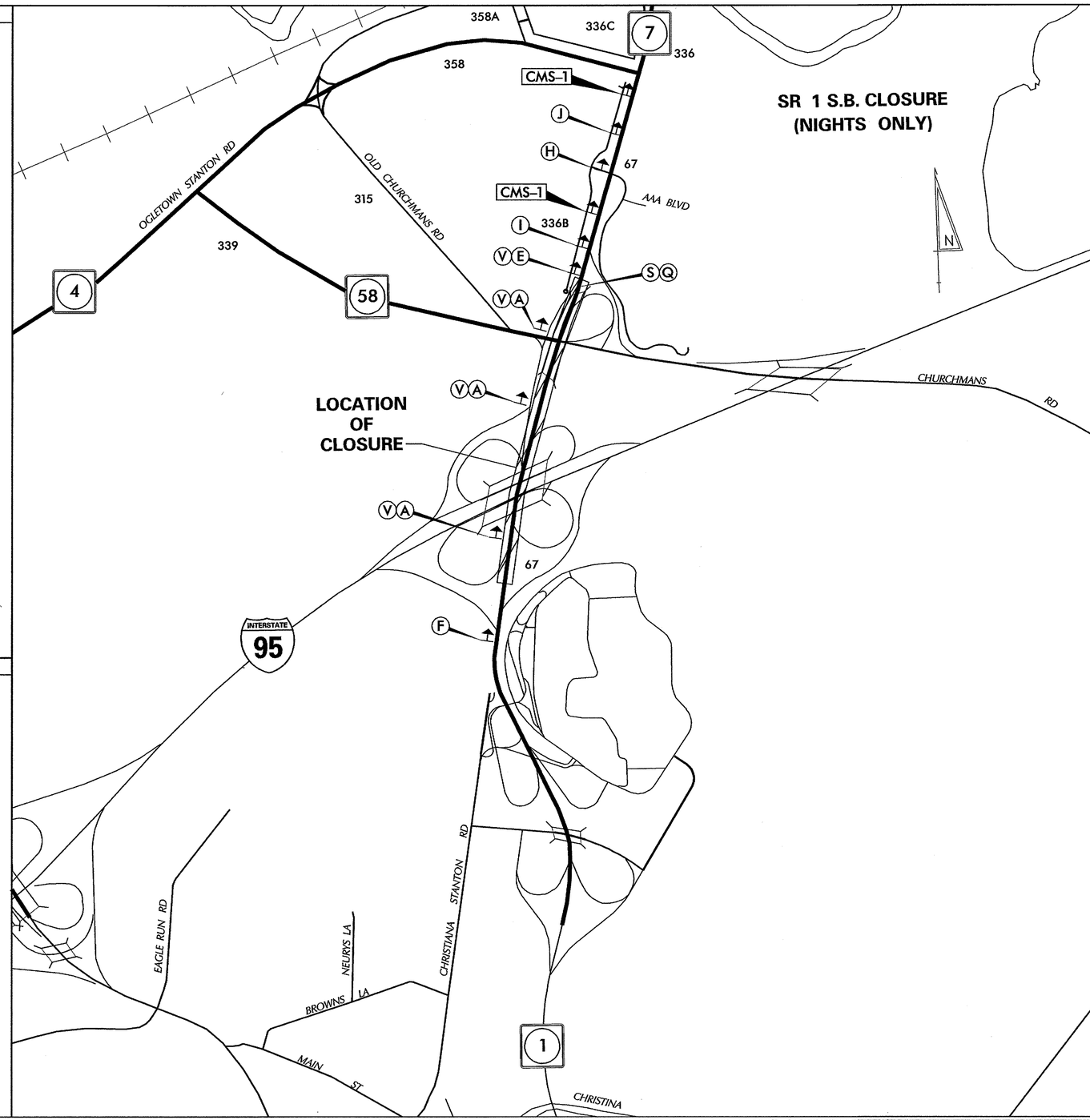

LEGEND

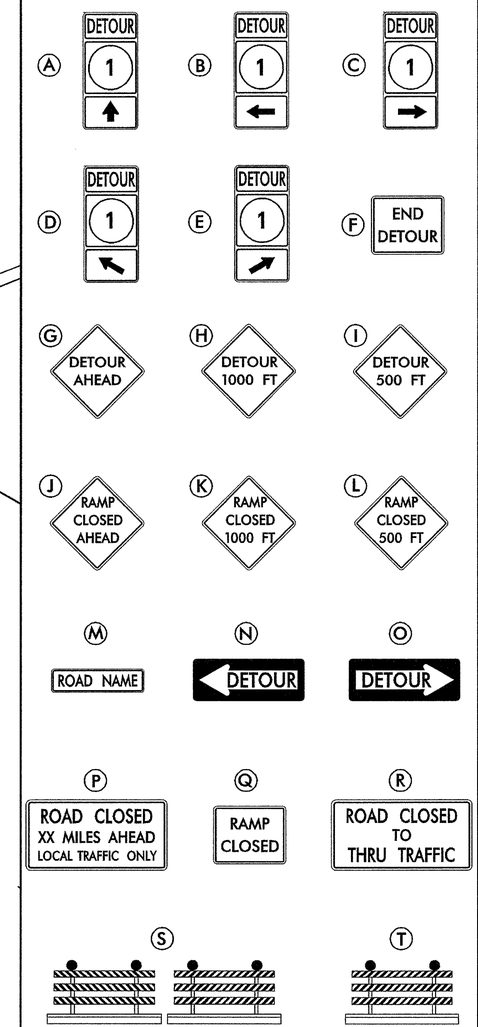

GENERAL NOTES

1. ALL DETOUR SIGNING INCLUDING, TRAILBLAZERS, ARE TO BE SUPPLIED AND MAINTAINED BY THE GENERAL CONTRACTOR IN COMPLIANCE TO THE DE MANUAL OF UNIFORM TRAFFIC CONTROL DEVICES.
2. THE CONTRACTOR SHALL COMPLY WITH GUIDELINES IN "THE DELAWARE MANUAL ON UNIFORM TRAFFIC CONTROL DEVICES (DE- MUTCD PART 6) FOR LIGHTS, BARRICADES AND SIGNS.(AS PER LATEST REVISION)
3. FIELD CONDITIONS MAY DICTATE CHANGES AT SOME TIME DURING THE LIFE OF THE CONTRACT. IN THE EVENT OF OMISSIONS OR CORRECTIONS, THE SIGNING PROVISIONS OF THE DELAWARE MANUAL ON UNIFORM TRAFFIC CONTROL DEVICES WILL PREVAIL.
4. SIGNS J THROUGH L AND P THROUGH R ,THE WORD (ROAD) SHOULD BE CHANGED TO RAMP, R/R OR BRIDGE WHERE APPLICABLE.
5. WARNING SIGNS SHOULD BE MOUNTED ON BREAKAWAY POSTS AND HAVE RETROREFLECTIVE FLUORESCENT SHEETING.
6. "S" BARRICADES SHALL COMPLETELY RUN THE FULL WIDTH OF ROADWAY.
7. BARRICADES SHALL BE A MINIMUM OF 6 FEET WIDE UNLESS DIRECTED BY THE ENGINEER.

RECOMMENDED _____ DATE: _____	RECOMMENDED _____ DATE: 10-11-10	RECOMMENDED _____ DATE: 10/11/10	APPROVED CHIEF SAFETY OFFICER _____ DATE: 10-11-10	APPROVED TRAFFIC ENGINEER _____ DATE: 10/11/10

DELAWARE DEPARTMENT OF TRANSPORTATION

ADDENDUM / REVISIONS

NOT TO SCALE

SR1/I-95 INTERCHANGE – CHRISTIANA MALL ROAD BRIDGE

CONTRACT	BRIDGE NO.	1-223
T201009004	DESIGNED BY:	JCR
COUNTY		
NEW CASTLE	CHECKED BY:	MCS/JAB

DETOUR PLAN 8
SR1 S.B. CLOSURE

SHEET NO.
127E
TOTAL SHTS.
164

10/6/2010 4:57:00 PM
M:\projects\2003\03059_deltrnpk\SR1Mall\Cadd\3009004\Plans\dp08_RampR1.dgn

GENERAL NOTES

1. THIS CONTRACT (T201009004) INCLUDES ROADWAY LIGHTING ASSOCIATED WITH THE CONSTRUCTION OF RAMP R1 AND IMPROVEMENTS TO RAMPS R AND G1. ALL OTHER ROADWAY LIGHTING IMPROVEMENTS WILL OCCUR UNDER CONTRACT T200809003.

2. ALL ELECTRICAL WORK SHALL BE PERFORMED AND ALL MATERIAL PROVIDED SHALL BE IN ACCORDANCE WITH THE NATIONAL ELECTRIC CODE OF THE NATIONAL FIRE PROTECTION ASSOCIATION, TO ALL LOCAL AND SPECIAL LAWS, AND/OR TO ORDINANCES GOVERNING SUCH MATERIAL. CODE SHALL BE CONSIDERED THE MINIMUM REQUIREMENTS FOR THE ELECTRICAL WORK AND IF THERE IS A CONFLICT BETWEEN THE REQUIREMENTS SPECIFIED IN THE CONTRACT DOCUMENTS AND THE CODE, THE MORE STRINGENT REQUIREMENT WILL APPLY AS DETERMINED AND APPROVED BY THE ENGINEER. WHEN THESE REQUIREMENTS DO NOT GOVERN, AND WHERE NOT OTHERWISE SPECIFIED, ELECTRICAL MATERIALS SHALL CONFORM TO THE STANDARDIZATION RULES OF THE INSTITUTE OF ELECTRICAL ENGINEERS.

3. THE CONTRACTOR SHALL PROVIDE AND SECURE ALL ELECTRICAL INSPECTIONS AS REQUIRED AND PAY FOR THE SAME. THE ELECTRICAL CONTRACTOR SHALL OBTAIN AT HIS EXPENSE ALL NECESSARY PERMITS AND CERTIFICATES AS REQUIRED.

4. THE ELECTRICAL CONTRACTOR SHALL COORDINATE HIS WORK WITH ALL THE CONTRACTORS INVOLVED ON THIS PROJECT. THE ELECTRICAL CONTRACTOR SHALL COORDINATE WITH THE ENGINEER AND THE GENERAL SUPERINTENDENT THE LOCATIONS OF ALL CONDUIT AND POLE BASES TO ELIMINATE CONSTRUCTION CONFLICTS.

5. BURIED ELECTRICAL CABLE AND CONDUIT, AND OTHER UTILITIES MAY EXIST THROUGHOUT THIS PROJECT. THE EXISTING UTILITY LOCATIONS SHOWN ON THE PLANS ARE APPROXIMATE. THE CONTRACTOR SHALL BE RESPONSIBLE FOR LOCATING AND PREVENTING DAMAGE TO THEM, AND MAINTAINING THEM IN SERVICE WHEN AND WHERE REQUIRED. THE CONTRACTOR SHALL VERIFY THE EXACT LOCATIONS PRIOR TO COMMENCING WORK. THE CONTRACTOR SHALL VERIFY THE LOCATION OF ALL EXISTING UTILITIES BY HAND EXCAVATION PRIOR TO TRENCHING BY MACHINE.

6. THE ELECTRICAL CONTRACTOR SHALL GUARANTEE ALL WORK MATERIAL AND LABOR TO BE FREE FROM DEFECTS FOR A ONE YEAR PERIOD FROM THE TIME OF OWNER ACCEPTANCE. ANY DEFECTS OCCURRING DURING THIS PERIOD SHALL BE CORRECTED BY THE ELECTRICAL CONTRACTOR AT NO ADDITIONAL COST TO THE OWNER.

7. CONDUIT RUNS ARE SHOWN IN APPROXIMATE LOCATIONS. THE CONTRACTOR SHALL LOCATE THE CONDUIT RUNS IN A MANNER THAT AVOIDS CONFLICTS WITH ALL EXISTING AND PROPOSED FEATURES AS FIELD CONDITIONS DICTATE AND AS APPROVED BY THE ENGINEER.

8. TERMINATE ALL CONDUITS WHEN ENTERING ENCLOSURES WITH LOCKNUT AND BONDING BUSHINGS. ALL OTHER CONDUITS SHALL BE PROVIDED WITH BONDING BUSHINGS. ALL CONDUITS SHALL BE BONDED WITH THE GROUND WIRE.

9. COLOR CODING SHALL BE PROVIDED THROUGHOUT THE ENTIRE NETWORK FOR SERVICE,FEEDER, BRANCH AND CONTROL CONDUCTORS. EACH PHASE SHALL BE AN INDEPENDENT COLOR. CONDUCTORS SHALL HAVE FACTORY IMPREGNATED COLOR THROUGHOUT THEIR ENTIRE LENGTH. PHASE TAPING IS NOT PERMITTED.

10. EXISTING LIGHT POLES AND JUNCTION WELLS TO BE REMOVED SHALL BE SALVAGED AND DELIVERED TO DELDOT NORTH DISTRICT MAINTENANCE SHOP, 39 EAST REGAL BLVD, NEWARK, DELAWARE.

11. THE CONTRACTOR SHALL NOTIFY DELMARVA POWER TWO WEEKS IN ADVANCE TO ARRANGE FINAL POWER CONNECTIONS. CONTACT: MR. MARK SMITH AT 302-454-4138 OR MR. ANGEL COLLAZO AT 302-454-4370.

12. ALL FUSED CONNECTIONS SHALL BE MADE IN THE POLE BASE. SPLICES IN JUNCTION BOXES PULL BOXES SHALL NOT BE FUSED.

13. THE CONTRACTOR SHALL VERIFY ALL DIMENSIONS AND CONDITIONS AT SITE PRIOR TO WORK.

14. WORK INCLUDES FURNISHING LABOR,MATERIAL,EQUIPMENT AND SERVICE NECESSARY AND INCIDENTAL TO PROPER COMPLETION OF THE ELECTRICAL WORK AS SHOWN. MINOR ITEMS,ACCESSORIES OR DEVICES NECESSARY FOR COMPLETION AND PROPER OPERATION OF ANY SYSTEM SHALL BE PROVIDED WHETHER OR NOT THEY ARE SPECIFICALLY CALLED FOR BY SPECIFICATIONS OR DRAWINGS.

15. ALL CONDUITS, JUNCTION WELLS, LIGHTING STANDARDS, ETC. SHALL BE STAKED OUT AND EVERY LOCATION APPROVED BY THE ENGINEER BEFORE ANY WORK IS DONE.

16. THE CONTRACTOR SHALL VERIFY THE OPERATING CIRCUIT AND PHASE OF ALL EXISTING ROADWAY LIGHTING EQUIPMENT WHERE THE ELECTRICAL SERVICE IS BEING INTERRUPTED. THE EXISTING ROADWAY EQUIPMENT SHALL BE RECONNECTED TO THE SAME CIRCUIT AND PHASE AS IS EXISTING UNLESS OTHERWISE NOTED ON THE PLANS.

17. ALL STATION, OFFSET AND DIMENSION INFORMATION SHOWN FOR PROPOSED LIGHTING STANDARDS AND THE RELOCATED HIGH MAST POLE IS TO THE CENTER OF THE POLE BASE.

18. THE ELECTRICAL CONTRACTOR SHALL COORDINATE THE INSTALLATION OF LIGHTING CONDUITS WITH ITMS CONDUITS. ITMS AND LIGHTING CONDUITS MAY SHARE A COMMON TRENCH BUT SHALL NOT SHARE COMMON JUNCTION WELLS.

19. ELECTRICAL CABLES SHALL BE REMOVED FROM ALL CONDUITS DESIGNATED TO BE ABANDONED.

20. EXISTING ROADWAY LIGHTING CONDUITS AND CABLES SHALL REMAIN UNLESS NOTED OTHERWISE ON THE PLANS.

21. SPLICES FOR ALL ROADWAY LIGHTING ELECTRICAL CABLES, INCLUDING RE-CONNECTION OF EXISTING IMPACTED ELECTRICAL CABLES, SHALL BE COMPLETED USING APPROVED SPLICE KITS OR METHODS APPROVED BY THE ENGINEER AND SHALL BE INCIDENTAL TO THE SUPPLY AND INSTALLATION OF VARIOUS ROADWAY LIGHTING ELECTRICAL CABLES.

22. ALL PROPOSED DAVIT ARM LIGHTING STANDARDS SHALL BE INSTALLED WITH BREAKAWAY TRANSFORMER BASES, WHETHER PROTECTED OR UNPROTECTED, UNLESS OTHERWISE NOTED.

23. WHERE INDICATED ON THE PLANS TO REMOVE EXISTING LIGHTING STANDARD, THIS SHALL INCLUDE REMOVAL OF THE EXISTING LIGHTING STANDARD AND FOUNDATION, UNLESS OTHERWISE NOTED. PAYMENT FOR REMOVAL OF EXISTING LIGHT POLES SHALL BE MADE UNDER ITEM 746811. PAYMENT FOR REMOVAL OF EXISTING POLE BASES SHALL BE MADE UNDER ITEM 746830.

24. PAYMENT FOR REMOVAL OF EXISTING JUNCTION WELLS SHALL BE MADE UNDER ITEM 744525.

25. PAYMENT FOR RELOCATION OF EXISTING HIGH MAST LIGHT TOWERS AND ASSOCIATED ELECTRICAL EQUIPMENT SHALL BE MADE UNDER ITEM 746620.

26. POLE NUMBERS, CIRCUITS, AND CABLE SIZES FOR EXISTING ROADWAY LIGHTING OBTAINED FROM DELDOT CONTRACT NO. 93-101-01.

27. UNDERGROUND CONDUITS SHALL BE SLOPED TO DRAIN TO THE NEAREST JUNCTION WELL. IF THIS CANNOT BE ACCOMPLISHED, PROVIDE A DRAINAGE TEE AT LOW POINT OF CONDUIT RUN. DRAINAGE TEES SHALL BE INCIDENTAL TO ITEM 745526 FOR 3" CONDUIT.

LEGEND

LST X / LST X	LIGHTING STANDARD IDENTIFIER (EXISTING AND PROPOSED)
LSR X / LSR X	LIGHTING SERVICE RUN IDENTIFIER (EXISTING AND PROPOSED)
JW X / JW X	JUNCTION WELL & TYPE (EXISTING AND PROPOSED)
HM X / HM X	HIGH MAST TOWER AND LUMINAIRES (EXISTING AND PROPOSED)
UP X / UP X	UNDERPASS LIGHT (EXISTING AND PROPOSED)
CA X / CA X	LIGHTING CONTROL CENTER & TYPE (EXISTING AND PROPOSED)
	EXISTING OFFSET LUMINAIRE
	EXISTING LIGHTING STANDARD
	PROPOSED COBRAHEAD LUMINAIRE, SINGLE DAVIT ARM
CONCRETE SLAB / DIRECTION FOR LOWERING POLE	EXISTING HIGH MAST TOWER, (6) 1000W HPS LUMINAIRES
EB	EXISTING HIGH MAST TOWER ELECTRICAL CABINET
P	PROPOSED METERED SERVICE PEDESTAL
CONCRETE SLAB / DIRECTION FOR LOWERING POLE	RELOCATED HIGHMAST TOWER (6) 1000W HPS LUMINAIRES
	PROPOSED UNDERPASS LUMINAIRE
	PROPOSED 277/480V THREE PHASE LIGHTING CONTROL CABINET
	EXISTING 240/480V SINGLE PHASE LIGHTING CONTROL CABINET
	PROPOSED LIGHTING CONDUIT
J.W.	EXISTING JUNCTION WELL
J.W.	PROPOSED JUNCTION WELL
J.B.	PROPOSED STRUCTURE MOUNTED JUNCTION BOX
RM O	REMOVE BY OTHERS
RM C	REMOVE BY CONTRACTOR
RL C	RELOCATE BY CONTRACTOR
AB	ABANDON

8/31/2010 8:08:32 AM
M:\PROJECTS\2003\03059_DELTRNPK\SRIMALL\CADD\3009004\PLANS\CP60_LI_RAMPR1.DGN

DELAWARE DEPARTMENT OF TRANSPORTATION

ADDENDUMS / REVISIONS

NOT TO SCALE

SR1/I-95 INTERCHANGE - CHRISTIANA MALL ROAD BRIDGE

CONTRACT	BRIDGE NO.	1-223
T201009004	DESIGNED BY: SMK	
COUNTY		
NEW CASTLE	CHECKED BY: HEH	

LIGHTING PLAN GENERAL NOTES & LEGEND

LI-01

SHEET NO. 128

TOTAL SHTS. 164

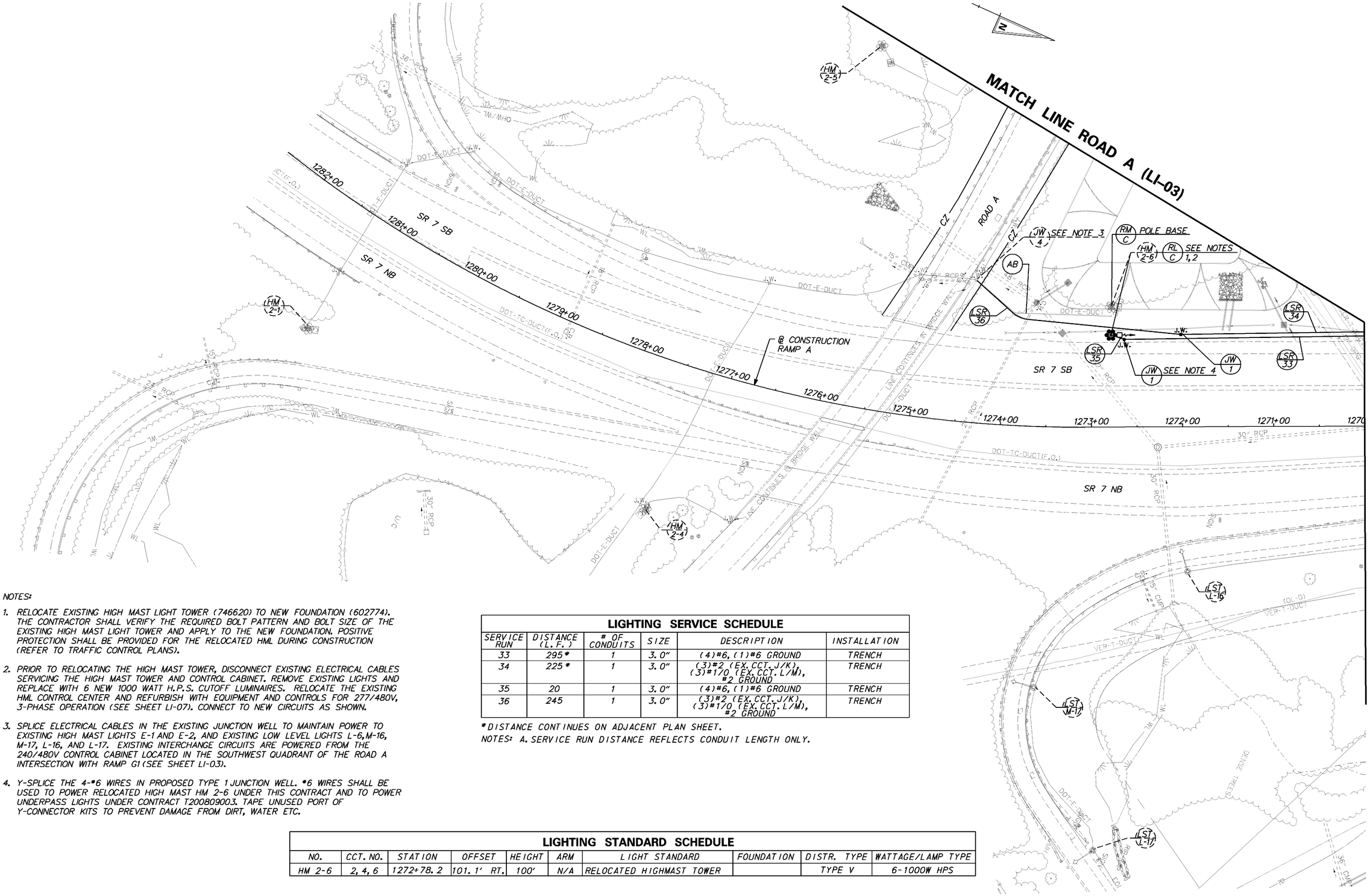

NOTES:

1. RELOCATE EXISTING HIGH MAST LIGHT TOWER (746620) TO NEW FOUNDATION (602774). THE CONTRACTOR SHALL VERIFY THE REQUIRED BOLT PATTERN AND BOLT SIZE OF THE EXISTING HIGH MAST LIGHT TOWER AND APPLY TO THE NEW FOUNDATION. POSITIVE PROTECTION SHALL BE PROVIDED FOR THE RELOCATED HML DURING CONSTRUCTION (REFER TO TRAFFIC CONTROL PLANS).

2. PRIOR TO RELOCATING THE HIGH MAST TOWER, DISCONNECT EXISTING ELECTRICAL CABLES SERVICING THE HIGH MAST TOWER AND CONTROL CABINET. REMOVE EXISTING LIGHTS AND REPLACE WITH 6 NEW 1000 WATT H.P.S. CUTOFF LUMINAIRES. RELOCATE THE EXISTING HML CONTROL CENTER AND REFURBISH WITH EQUIPMENT AND CONTROLS FOR 277/480V, 3-PHASE OPERATION (SEE SHEET LI-07). CONNECT TO NEW CIRCUITS AS SHOWN.

3. SPLICE ELECTRICAL CABLES IN THE EXISTING JUNCTION WELL TO MAINTAIN POWER TO EXISTING HIGH MAST LIGHTS E-1 AND E-2, AND EXISTING LOW LEVEL LIGHTS L-6, M-16, M-17, L-16, AND L-17. EXISTING INTERCHANGE CIRCUITS ARE POWERED FROM THE 240/480V CONTROL CABINET LOCATED IN THE SOUTHWEST QUADRANT OF THE ROAD A INTERSECTION WITH RAMP G1 (SEE SHEET LI-03).

4. Y-SPLICE THE 4-#6 WIRES IN PROPOSED TYPE 1 JUNCTION WELL. #6 WIRES SHALL BE USED TO POWER RELOCATED HIGH MAST HM 2-6 UNDER THIS CONTRACT AND TO POWER UNDERPASS LIGHTS UNDER CONTRACT T200809003. TAPE UNUSED PORT OF Y-CONNECTOR KITS TO PREVENT DAMAGE FROM DIRT, WATER ETC.

LIGHTING SERVICE SCHEDULE

SERVICE RUN	DISTANCE (L.F.)	# OF CONDUITS	SIZE	DESCRIPTION	INSTALLATION
33	295*	1	3.0"	(4)#6, (1)#6 GROUND	TRENCH
34	225*	1	3.0"	(3)#2 (EX.CCT.J/K), (3)#1/0 (EX.CCT.L/M), #2 GROUND	TRENCH
35	20	1	3.0"	(4)#6, (1)#6 GROUND	TRENCH
36	245	1	3.0"	(3)#2 (EX.CCT.J/K), (3)#1/0 (EX.CCT.L/M), #2 GROUND	TRENCH

*DISTANCE CONTINUES ON ADJACENT PLAN SHEET.

NOTES: A. SERVICE RUN DISTANCE REFLECTS CONDUIT LENGTH ONLY.

LIGHTING STANDARD SCHEDULE

NO.	CCT. NO.	STATION	OFFSET	HEIGHT	ARM	LIGHT STANDARD	FOUNDATION	DISTR. TYPE	WATTAGE/LAMP TYPE
HM 2-6	2, 4, 6	1272+78.2	101.1' RT.	100'	N/A	RELOCATED HIGHMAST TOWER		TYPE V	6-1000W HPS

9/15/2010 11:37:07 AM
M:\PROJECTS\2003\03059_DELTRNPK\SRIMALL\CADD\3009004\PLANS\CP63_LI_RAMPR1.DGN

DELAWARE DEPARTMENT OF TRANSPORTATION

ADDENDUMS / REVISIONS

SCALE 0 50 100 150 FEET

SR1/I-95 INTERCHANGE - CHRISTIANA MALL ROAD BRIDGE

CONTRACT	BRIDGE NO.	1-223
T201009004	DESIGNED BY: SMK	
COUNTY		
NEW CASTLE	CHECKED BY: HEH	

LIGHTING PLAN

LI-02
SHEET NO.
129
TOTAL SHTS.
164

LIGHTING STANDARD SCHEDULE

NO.	CCT. NO.	STATION	OFFSET	HEIGHT	ARM	LIGHT STANDARD	FOUNDATION	DISTR. TYPE	WATTAGE/LAMP TYPE
LST-1	1	1339+89.6	32.0' LT.	40'	8'	COBRAHEAD, DAVIT ARM POLE		TYPE III	250W HPS
LST-2	3, 5	1518+54.5	13.6' LT.	40'	2-12'	COBRAHEAD, TWIN DAVIT ARM POLE		TYPE III	2-250W HPS
LST-3	1, 3	1520+23.3	12.6' LT.	40'	2-12'	COBRAHEAD, TWIN DAVIT ARM POLE		TYPE III	2-250W HPS
LST-4	1	1334+52.7	30.0' RT.	40'	12'	COBRAHEAD, DAVIT ARM POLE		TYPE III	250W HPS
LST-5	3	1332+75.4	30.0' RT.	40'	12'	COBRAHEAD, DAVIT ARM POLE		TYPE III	250W HPS
LST-6	5	105+59.0	39.0' RT.	40'	12'	COBRAHEAD, DAVIT ARM POLE		TYPE III	250W HPS

LIGHTING SERVICE SCHEDULE

SERVICE RUN	DISTANCE (L.F.)	# OF CONDUITS	SIZE	DESCRIPTION	INSTALLATION
1	285	1	3.0"	(3)#4/0, #2 GROUND	TRENCH
2	270	1	3.0"	(3)#8 (CCTS 1, 3), (3)#10 (PHOTOCELL), (1)#8 GROUND	TRENCH
3	180	1	3.0"	(2)#8, (1)#8 GROUND	TRENCH
4	20	1	3.0"	(2)#8, (1)#8 GROUND	TRENCH
5	80	1	3.0"	(2)#8, (1)#8 GROUND	TRENCH
6	255	1	3.0"	(2)#8, (1)#8 GROUND	TRENCH
7	85	1	3.0"	(4)#8, (1)#8 GROUND	TRENCH
8	85	1	3.0"	(4)#4 (CCTS. 8, 10, 12), (4)#6 (CCTS. 2, 4, 6), (4)#8 (CCTS. 1, 3, 5), (1)#6 GROUND	TRENCH
9	190	1	3.0"	(4)#4, (4)#6, (1)#6 GROUND	TRENCH
10	200	1	3.0"	(2)#8, (1)#8 GROUND	TRENCH
11	10	1	3.0"	(4)#4 (CCTS. 8, 10, 12), (4)#6 (CCTS. 2, 4, 6), (4)#8 (CCTS. 1, 3, 5), (3)#10 (PHOTOCELL), (1)#6 GROUND	TRENCH
12	60	2	3.0"	(4)#4 (CCTS. 8, 10, 12), (4)#6 (CCTS. 2, 4, 6), (4)#8 (CCTS. 1, 3, 5), (1)#6 GROUND	TRENCH
13	205*	1	3.0"	(4)#4, (4)#6, (1)#6 GROUND	TRENCH
14	10	1	3.0"	(4)#8, (1)#8 GROUND	TRENCH
15	10	1	3.0"	(3)#4/0, #2 GROUND	TRENCH

*DISTANCE CONTINUES ON ADJACENT PLAN SHEET.

NOTES: A. SERVICE RUN DISTANCE REFLECTS CONDUIT LENGTH ONLY.

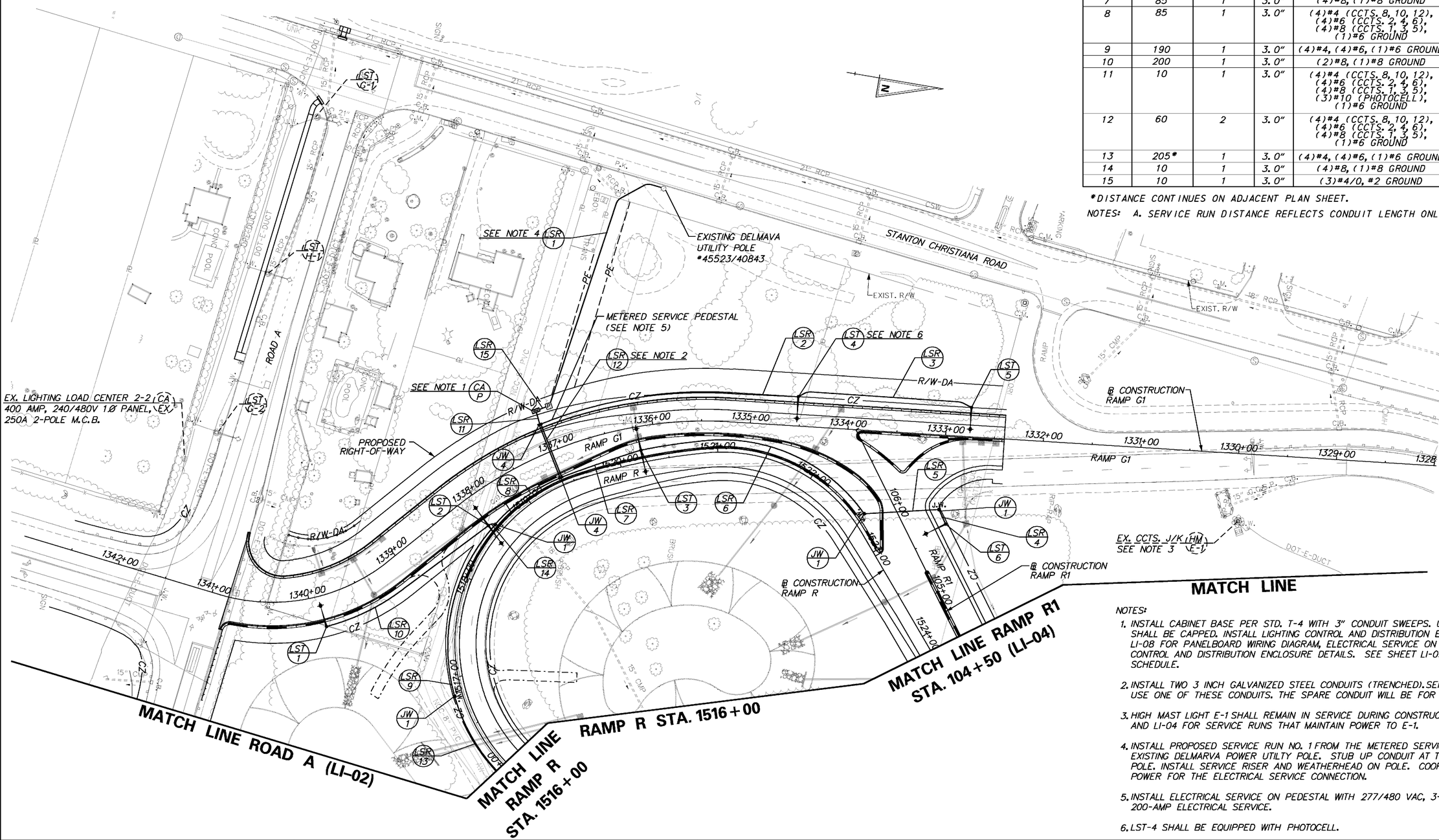

NOTES:

1. INSTALL CABINET BASE PER STD. T-4 WITH 3" CONDUIT SWEEPS. UNUSED CONDUIT BENDS SHALL BE CAPPED. INSTALL LIGHTING CONTROL AND DISTRIBUTION ENCLOSURE. SEE SHEET LI-08 FOR PANELBOARD WIRING DIAGRAM, ELECTRICAL SERVICE ON PEDESTAL AND LIGHTING CONTROL AND DISTRIBUTION ENCLOSURE DETAILS. SEE SHEET LI-09 FOR PANELBOARD SCHEDULE.
2. INSTALL TWO 3 INCH GALVANIZED STEEL CONDUITS (TRENCHED). SERVICE RUN 12 SHALL USE ONE OF THESE CONDUITS. THE SPARE CONDUIT WILL BE FOR FUTURE USE.
3. HIGH MAST LIGHT E-1 SHALL REMAIN IN SERVICE DURING CONSTRUCTION. SEE SHEETS LI-02 AND LI-04 FOR SERVICE RUNS THAT MAINTAIN POWER TO E-1.
4. INSTALL PROPOSED SERVICE RUN NO. 1 FROM THE METERED SERVICE PEDESTAL TO THE EXISTING DELMARVA POWER UTILTY POLE. STUB UP CONDUIT AT THE BASE OF THE UTILITY POLE. INSTALL SERVICE RISER AND WEATHERHEAD ON POLE. COORDINATE WITH DELMARVA POWER FOR THE ELECTRICAL SERVICE CONNECTION.
5. INSTALL ELECTRICAL SERVICE ON PEDESTAL WITH 277/480 VAC, 3-PHASE, 4-WIRE, 200-AMP ELECTRICAL SERVICE.
6. LST-4 SHALL BE EQUIPPED WITH PHOTOCELL.

LI-03

DELAWARE DEPARTMENT OF TRANSPORTATION

ADDENDUMS / REVISIONS

SCALE 0 50 100 150 FEET

SR1/I-95 INTERCHANGE - CHRISTIANA MALL ROAD BRIDGE

CONTRACT	BRIDGE NO.	1-223
T201009004	DESIGNED BY: SMK	
COUNTY		
NEW CASTLE	CHECKED BY: HEH	

LIGHTING PLAN

SHEET NO. 130

TOTAL SHTS. 164

10/4/2010 11:11:24 AM
M:\PROJECTS\2003\03059_DELTRNPK\SRIMALL\CADD\3009004\PLANS\CP65_LI_RAMPR1.DGN

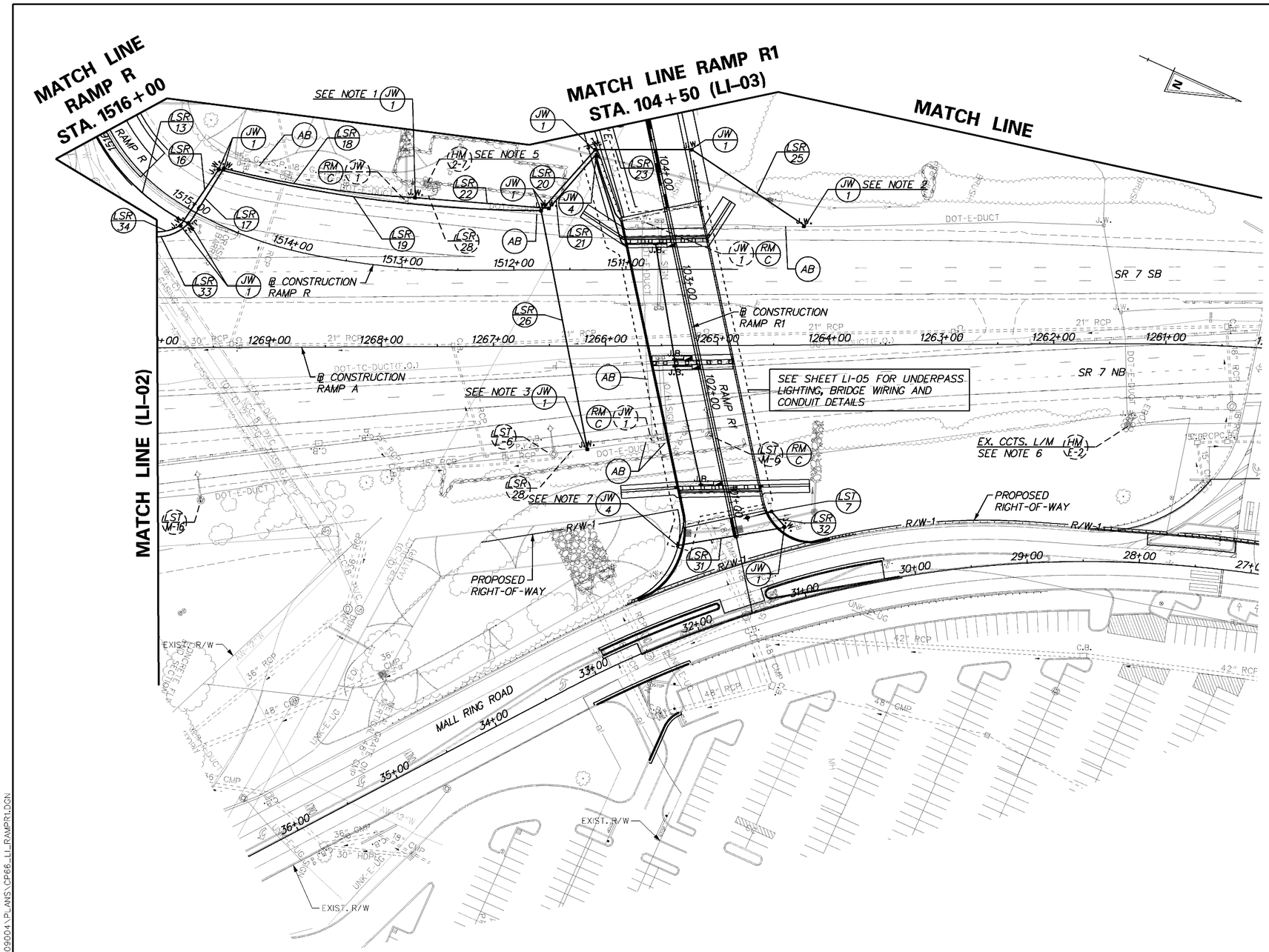

LIGHTING SERVICE SCHEDULE

SERVICE RUN	DISTANCE (L.F.)	# OF CONDUITS	SIZE	DESCRIPTION	INSTALLATION
13	205 *	1	3.0"	(4)#4, (4)#6, (1)#6 GROUND	TRENCH
16	60	1	3.0"	(3)#2 (EX.CCT.J/K), (3)#170 (EX.CCT.L/M), #2 GROUND	BORE
17	60	1	3.0"	(4)#4, (1)#6 GROUND	BORE
18	175	1	3.0"	(4)#4, (1)#6 GROUND	TRENCH
19	295	1	3.0"	(3)#2 (EX.CCT.J/K), (3)#170 (EX.CCT.L/M), #2 GROUND	TRENCH
20	75	1	3.0"	(3)#2 (EX.CCT.J/K), (3)#170 (EX.CCT.L/M), #2 GROUND	TRENCH
21	65	1	3.0"	(4)#6, (1)#6 GROUND	TRENCH
22	120	1	3.0"	(4)#6, (1)#6 GROUND	TRENCH
23	90	1	3.0"	(3)#2 (EX.CCT.J/K), (3)#170 (EX.CCT.L/M), #2 GROUND	TRENCH
25	125	1	3.0"	(3)#2 (EX.CCT.J/K), (3)#170 (EX.CCT.L/M), #2 GROUND	TRENCH
26	220	1	3.0"	(3)#2, (1)#2 GROUND (EX.CCT.L/M)	BORE
27	30	1	EXIST.	EX.(3)#8, (1)#8 GROUND	EXISTING
28	30	1	EXIST.	(4)#4, (1)#6 GROUND	EXISTING
29	NOT USED				
30	NOT USED				
31	100	1	3.0"	(2)#6, (1)#6 GROUND	TRENCH
32	20	1	3.0"	(2)#6, (1)#6 GROUND	TRENCH
33	295*	1	3.0"	(4)#6, (1)#6 GROUND	TRENCH
34	225*	1	3.0"	(3)#2 (EX.CCT.J/K), (3)#170 (EX.CCT.L/M), #2 GROUND	TRENCH

*DISTANCE CONTINUES ON ADJACENT PLAN SHEET.

NOTES: A. SERVICE RUN DISTANCE REFLECTS CONDUIT LENGTH ONLY.

NOTES:

1. LOCATE AND INTERCEPT EXISTING UNDERGROUND ELECTRIC CONDUIT WITH PROPOSED TYPE 1 JUNCTION WELL. DISCONNECT AND REMOVE EXISTING EXISTING ELECTRICAL CABLES SERVICING THE HIGH MAST TOWER AND CONTROL CABINET. CONNECT TO NEW CIRCUITS 8, 10 AND 12 AS SHOWN.
2. LOCATE AND INTERCEPT EXISTING UNDERGROUND ELECTRIC CONDUIT WITH PROPOSED TYPE 1 JUNCTION WELL. CUT AND/OR PULL BACK EXISTING CABLES IN THE CONDUIT TO THE PROPOSED JUNCTION WELL SO THAT THE ELECTRICAL SERVICE IS MAINTAINED TO EXISTING HIGH MAST LIGHTS E-1 AND E-2. ENSURE SUFFICIENT CABLE REMAINS FOR SPLICING TO THE CABLES IN PROPOSED SERVICE RUN NO. 25.
3. LOCATE AND INTERCEPT EXISTING UNDERGROUND ELECTRIC CONDUIT WITH PROPOSED TYPE 1 JUNCTION WELL. CUT AND/OR PULL BACK EXISTING CABLES IN THE CONDUIT TO THE PROPOSED JUNCTION WELL, LEAVING SUFFICENT LENGTH FOR SPLICING TO THE PROPOSED #2 CABLE IN SERVICE RUN NO. 26. THE ELECTRICAL CABLES SHALL BE SPLICED SO THAT ELECTRICAL SERVICE IS MAINTAINED TO LOW LEVEL LIGHTS L-6, M-16, L-16, M-17, AND L-17. EXISTING LIGHTS SHALL BE POWERED FROM EXISTING LIGHTING LOAD CENTER 2-2 AND OPERATE OFF THE SAME CIRCUIT AND PHASE AS EXISTING.
4. UNDERPASS LIGHTS SHALL BE MOUNTED TO FACE OF ABUTMENT OR PIER. SEE SHEET LI-05 FOR UNDERPASS LIGHT WIRING DETAILS. SEE BRIDGE PLANS FOR MOUNTING DETAILS.
5. REMOVE EXISTING HIGH MAST LIGHTS AND REPLACE WITH 6 NEW 1000 WATT H.P.S. CUTOFF LUMINAIRES RATED FOR 277V. REFURBISH THE EXISTING HML CONTROL CENTER WITH EQUIPMENT AND CONTROLS FOR 277/480V, 3-PHASE OPERATION (SEE SHEET LI-07).
6. HIGH MAST LIGHT TOWER E-2 SHALL REMAIN IN SERVICE. SEE SHEET LI-02 FOR CONTINUATION OF SERVICE RUNS THAT MAINTAIN POWER TO TOWER E-2.
7. COIL TWO UNUSED #6 WIRES FOR CIRCUIT NOS. 8 AND 10 IN PROPOSED TYPE 4 JUNCTION WELL. THESE TWO WIRES SHALL BE USED UNDER CONTRACT T200809003. Y-SPLICE TWO REMAINING #6 WIRES FOR CIRCUIT NO. 12 TO CONTINUE TO LST-7 AND FOR FUTURE USE UNDER CONTRACT T200809003. TAPE UNUSED PORT OF Y-CONNECTOR KITS TO PREVENT DAMAGE FROM WATER, DIRT, ETC.

LIGHTING STANDARD SCHEDULE

NO.	CCT. NO.	STATION	OFFSET	HEIGHT	ARM	LIGHT STANDARD	FOUNDATION	DISTR. TYPE	WATTAGE/LAMP TYPE
LST-7	12	100+84.6	35.5' RT.	40'	15'	COBRAHEAD, DAVIT ARM POLE		TYPE III	250W HPS

9/15/2010 11:38:24 AM
M:\PROJECTS\2003\03059_DELTRNPK\SRIMALL\CADD\3009004\PLANS\CP66_LI_RAMPR1.DGN

DELAWARE DEPARTMENT OF TRANSPORTATION

ADDENDUMS / REVISIONS

SCALE 0 50 100 150 FEET

SR1/I-95 INTERCHANGE - CHRISTIANA MALL ROAD BRIDGE

CONTRACT	BRIDGE NO. 1-223
T201009004	DESIGNED BY: SMK
COUNTY	CHECKED BY: HEH
NEW CASTLE	

LIGHTING PLAN

LI-04

SHEET NO. 131

TOTAL SHTS. 164

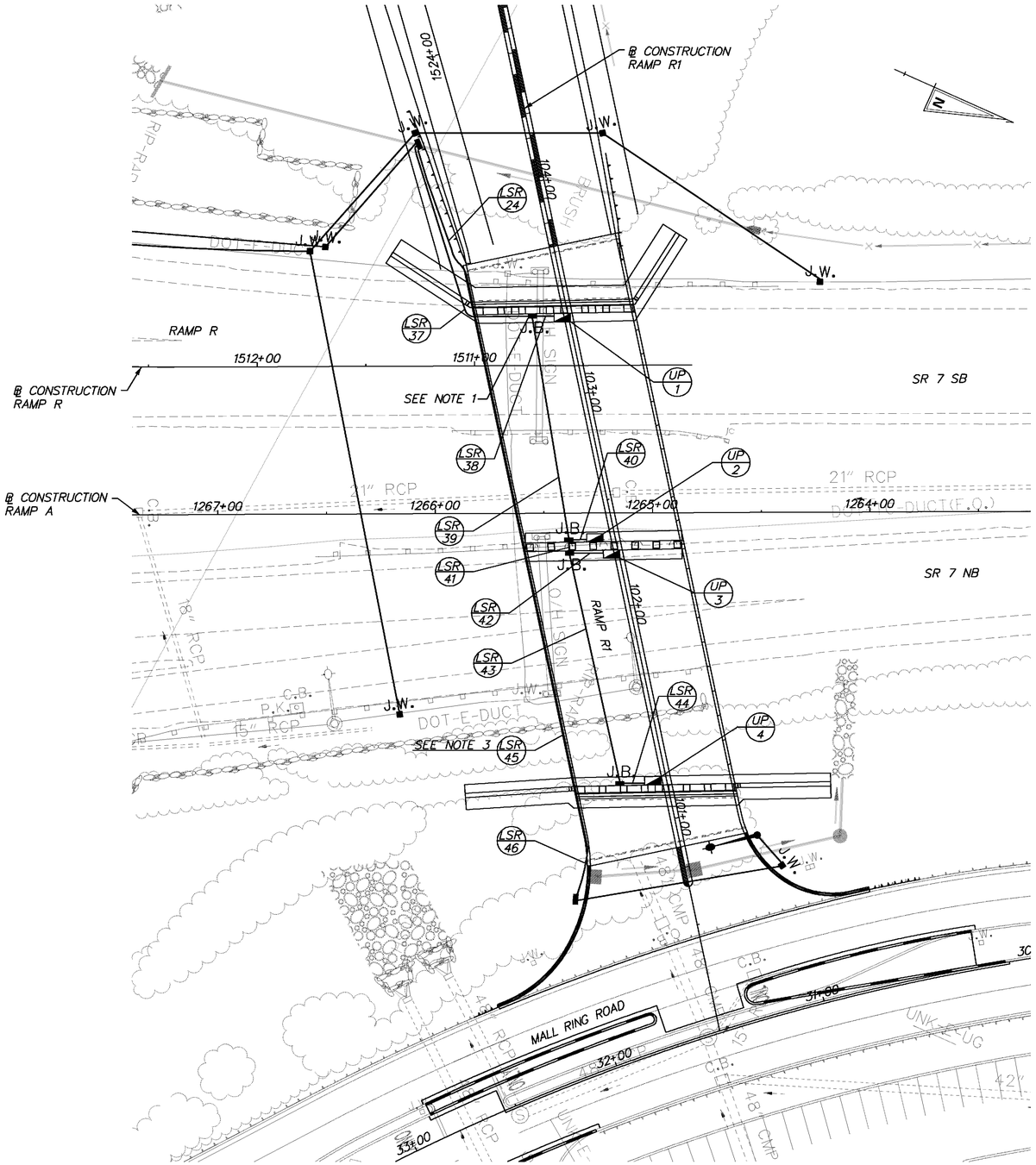

LIGHTING SERVICE SCHEDULE

SERVICE RUN	DISTANCE (L.F.)	# OF CONDUITS	SIZE	DESCRIPTION	INSTALLATION
24	115	1	1.0"	(4)#6, (1)#6 GROUND	TRENCH / ON STRUCT.
37	115	1	1.0"	(3)#8, (1)#8 GROUND	TRENCH / ON STRUCT.
38	10	1	0.75"	(2)#10, (1)#10 GROUND	ON STRUCTURE
39	110	1	1.0"	(3)#8, (1)#8 GROUND	ON STRUCTURE
40	10	1	0.75"	(2)#10, (1)#10 GROUND	ON STRUCTURE
41	15	1	1.0"	(3)#8, (1)#8 GROUND	ON STRUCTURE
42	10	1	0.75"	(2)#10, (1)#10 GROUND	ON STRUCTURE
43	110	1	1.0"	(2)#8, (1)#8 GROUND	ON STRUCTURE
44	10	1	0.75"	(2)#10, (1)#10 GROUND	ON STRUCTURE
45	275	1	3.0"	(4)#6, (1)#6 GROUND	IN PARAPET
46	25	1	3.0"	(4)#6, (1)#6 GROUND	TRENCH

NOTES: A. SERVICE RUN DISTANCE REFLECTS CONDUIT LENGTH ONLY AND MAY VARY DEPENDING ON INSTALLATION METHOD. SEE BRIDGE PLANS FOR DETAILS.

LIGHTING STANDARD SCHEDULE

NO.	CCT. NO.	STATION	OFFSET	LIGHT STANDARD	DISTR. TYPE	WATTAGE/LAMP TYPE
UP-1	8	SEE STRUCTURE PLANS FOR MOUNTING LOCATIONS		UNDERPASS LIGHT, WALLPACK	TYPE IV	70W HPS
UP-2	10			UNDERPASS LIGHT, WALLPACK	TYPE IV	70W HPS
UP-3	8			UNDERPASS LIGHT, WALLPACK	TYPE IV	70W HPS
UP-4	10			UNDERPASS LIGHT, WALLPACK	TYPE IV	70W HPS

NOTES:

1. JUNCTION BOXES INSTALLED ON THE STRUCTURE FOR THE PURPOSE OF SPLICING CABLE FOR THE UNDERPASS LIGHTS SHALL BE MINIMUM 8"X8"X4", RATED NEMA 4. REFER TO STRUCTURE PLANS FOR MOUNTING LOCATION.
2. PROVIDE CONDUIT EXPANSION/DEFLECTION FITTINGS ON ALL CONDUITS CROSSING OPEN JOINTS ON THE BRIDGE. PROVIDE CONDUIT EXPANSION FITTINGS ON ALL CONDUITS CROSSING EXPANSION JOINTS ON THE BRIDGE.
3. INSTALL ONE 3" (FOR LIGHTING WIRING) AND ONE 2" (SPARE) CONDUIT IN THE BRIDGE PARAPET. INSTALL A NEMA 4X PULL BOX AT EACH END OF THE CONDUIT RUNS IN THE PARAPET. REFER TO STRUCTURE PLANS FOR BOX LOCATION AND SIZE.

UNDERPASS LIGHTING DETAIL NOTES:

1. UNDERPASS LIGHT SHALL BE EQUIPPED WITH A 70 WATT HIGH PRESSURE SODIUM LAMP.
2. ATTACH TO BRIDGE PIER/ABUTMENT PER MANUFACTURER'S RECOMMENDATIONS.

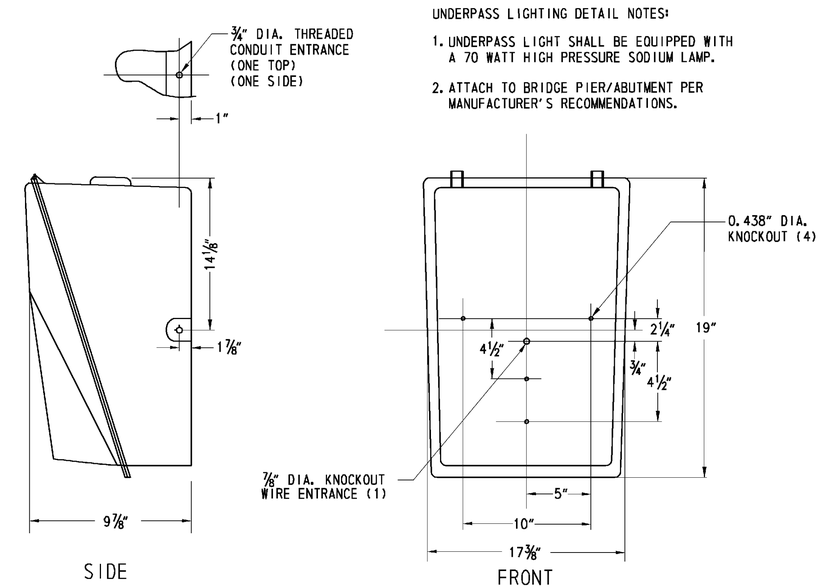

UNDERPASS LUMINAIRE DETAIL

NOT TO SCALE

8/27/2010 10:09:51 AM
M:\PROJECTS\2003\03059_DELTRNPK\SRIMALL\CADD\3009004\PLANS\CP66A_LI_RAMPR1.DGN

DELAWARE DEPARTMENT OF TRANSPORTATION	ADDENDUMS / REVISIONS	SCALE 0 30 60 90 FEET	SR1/I-95 INTERCHANGE - CHRISTIANA MALL ROAD BRIDGE	CONTRACT T201009004	BRIDGE NO. 1-223	UNDERPASS LIGHTING DETAILS	LI-05
				COUNTY NEW CASTLE	DESIGNED BY: SMK		SHEET NO. 132
					CHECKED BY: HEH		TOTAL SHTS. 164

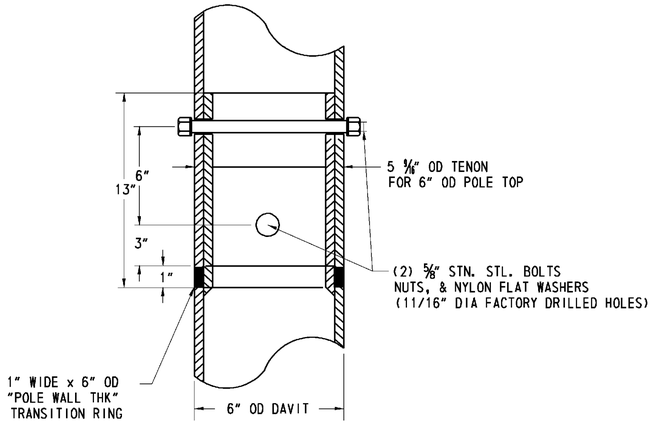

FLUSH JOINT DETAIL

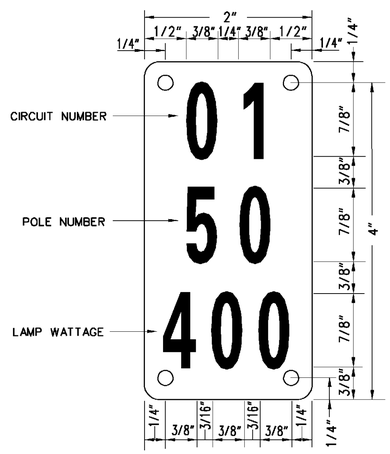

TYPICAL POLE I.D. TAG

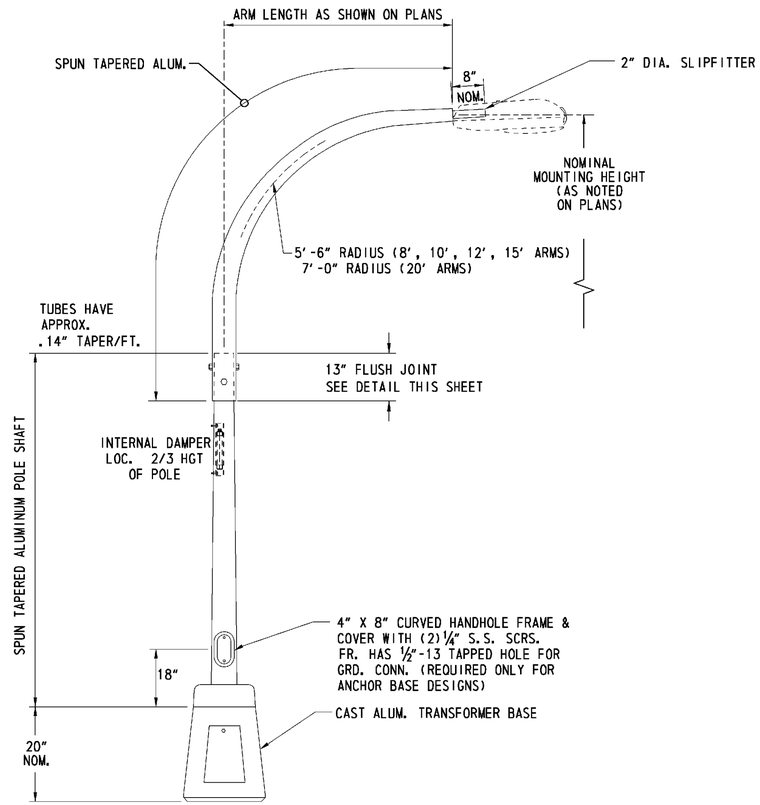

DAVIT ARM LIGHT POLE DETAIL

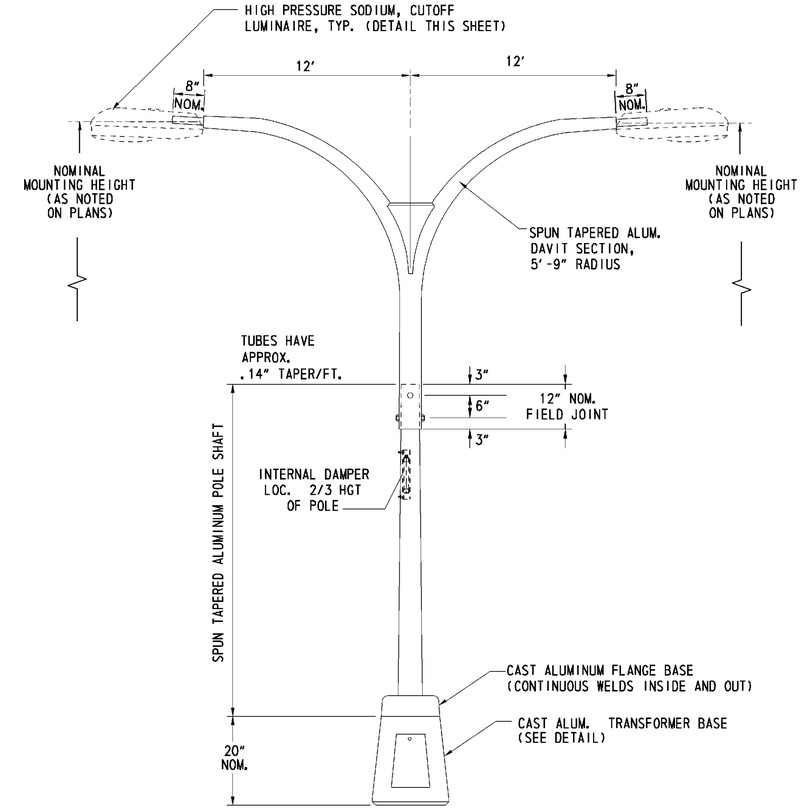

DAVIT TWIN ARM LIGHT POLE DETAIL

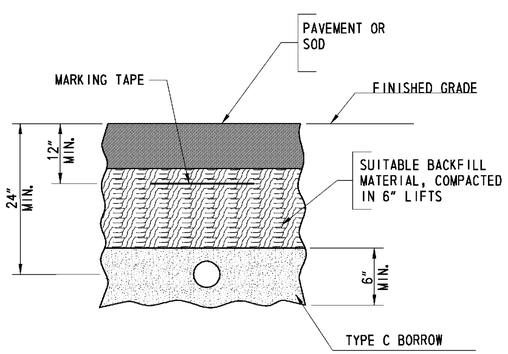

BURIED CONDUIT DETAIL

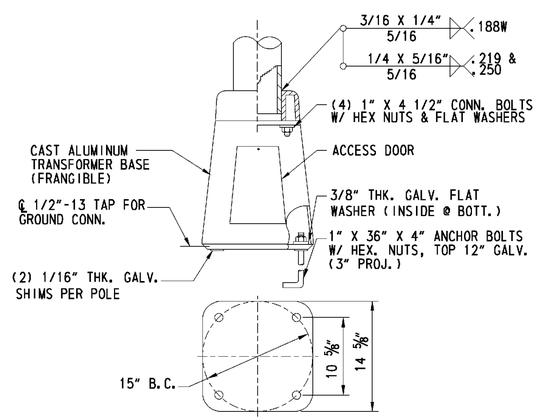

TRANSFORMER BASE DETAIL

NOTES:
1. TRANSFORMER BASE SHALL BE PROVIDED WITH ALL LIGHT POLES, WHETHER PROTECTED OR UNPROTECTED, UNLESS OTHERWISE NOTED.
2. REFER TO NOTES FOR THE ANCHOR BASE DETAIL FOR CONDITIONS WHERE AN ANCHOR BASE IS REQUIRED.

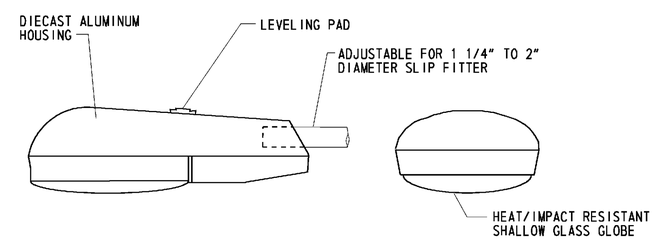

COBRAHEAD LUMINAIRE DETAIL

NOTES:
1. COBRAHEAD STYLE ROADWAY LUMINAIRES SHALL BE HIGH PRESSURE SODIUM WITH CUTOFF OPTICS. HORIZONTAL DISTRIBUTION TYPE AND WATTAGE SHALL BE AS SPECIFIED ON PLANS. ALL LUMINAIRES SHALL BE MOUNTED AT A ZERO DEGREE TILT ANGLE. PHOTOCONTROL SHALL BE LOCATED AT THE LIGHTING CONTROL CENTER ENCLOSURE, UNLESS OTHERWISE NOTED.

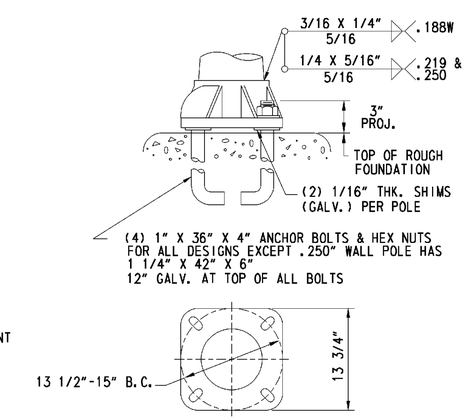

ANCHOR BASE DETAIL

NOTES:
1. ANCHOR BASES SHALL BE USED AT ALL LOCATIONS WHERE LIGHT POLES ARE MOUNTED ON TOP OF CONCRETE MEDIAN BARRIER.

LI-06

DELAWARE DEPARTMENT OF TRANSPORTATION	ADDENDUMS / REVISIONS	NOT TO SCALE	SR1/I-95 INTERCHANGE - CHRISTIANA MALL ROAD BRIDGE	CONTRACT T201009004	BRIDGE NO. 1-223	LIGHTING DETAILS
				COUNTY NEW CASTLE	DESIGNED BY: SMK	
					CHECKED BY: HEH	

SHEET NO. 133
TOTAL SHTS. 164

8/17/2010 9:50:54 AM
M:\PROJECTS\2003\03059_DELTRNPK\SRIMALL\CADD\3009004\PLANS\CP76_LIL_RAMPR.DGN

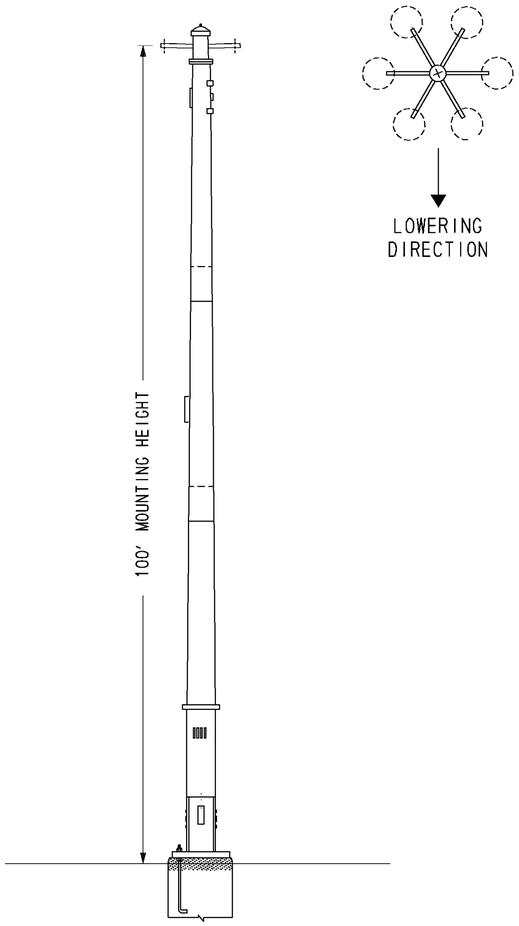

EXISTING HIGH MAST TOWER WITH ABACUS BASE SYSTEM

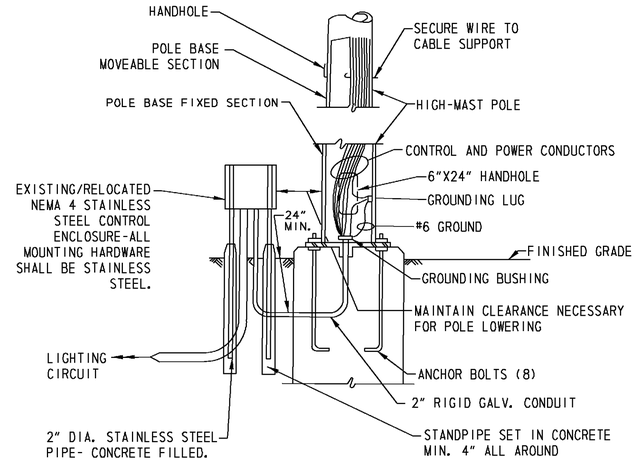

HIGH-MAST INSTALLATION DETAIL

NOTE: RELOCATION OF CONTROL ENCLOSURE AND ALL RELATED ITEMS SHALL BE INCIDENTAL TO THE RELOCATION OF THE EXISTING HIGH MAST TOWER AND PAID FOR UNDER ITEM # 746620. MODIFICATION OF THE CONTROL ENCLOSURE EQUIPMENT FOR 277/480V THREE PHASE SERVICE SHALL BE PAID FOR UNDER ITEM 746597. LOCATE JUNCTION WELLS ADJACENT TO POLE FOUNDATIONS AS NECESSARY FOR EASE OF CONDUIT INSTALLATION AND AVOIDABLE OF UTILITIES. FINAL LOCATIONS SHALL BE APPROVED BY THE ENGINEER PRIOR EXCAVATION.

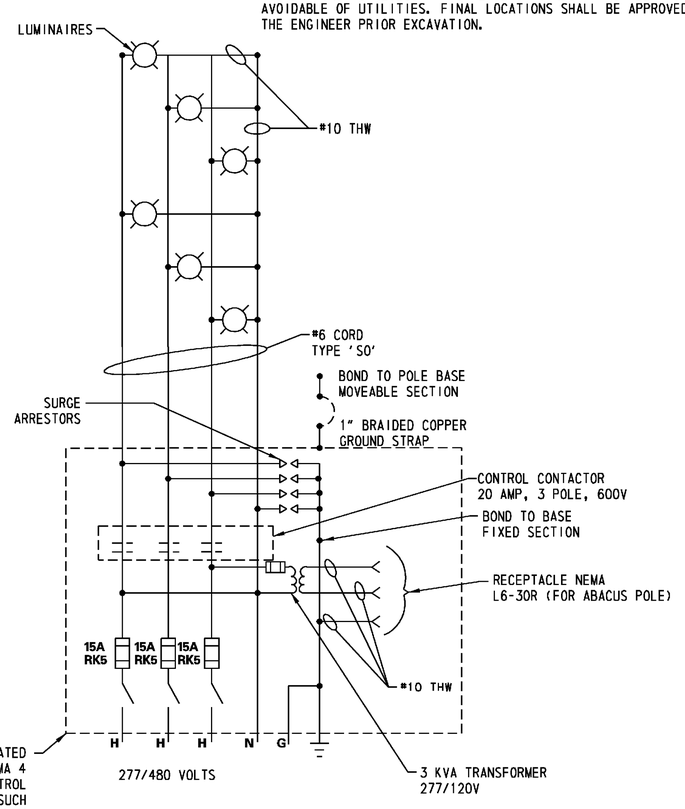

WIRING ARRANGEMENT AT HIGH-MAST TOWERS

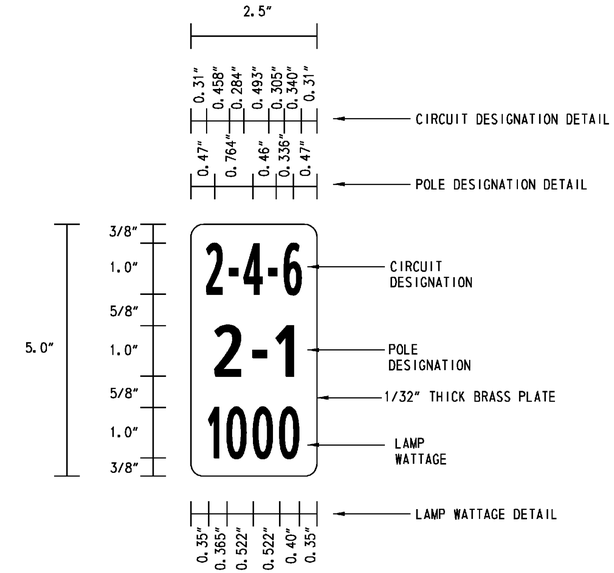

HIGH-MAST POLE IDENTIFICATION TAG

1. TAGS SHALL BE LOCATED IN APPROXIMATELY THE SAME LOCATION AS THE EXISTING TAG.
2. STROKE OF CHARACTERS SHALL BE 3/32" WIDE AND 1/64" DEEP PRESSED INTO BRASS PLATE.
3. SPACING IS FROM START OF NUMBER/SYMBOL TO START OF NEXT NUMBER/SYMBOL.

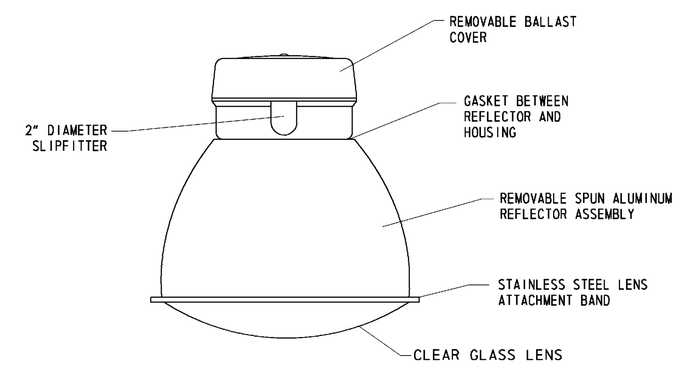

HIGH-MAST LUMINAIRE

NOTES:

1. FOR RELOCATED HIGH MAST TOWERS, REPLACE EXISITNG HIGHMAST LUMINAIRES WITH NEW CUTOFF LUMINAIRES WIRED FOR 277V OPERATION.
2. LUMINAIRES SHALL BE 1000W H.P.S. WITH CUTOFF OPTICS, TYPE V HORIZONTAL DISTRIBUTION, AND SHORT VERTICAL DISTRIBUTION.

LI-07

DELAWARE DEPARTMENT OF TRANSPORTATION	ADDENDUMS / REVISIONS	NOT TO SCALE	SR1/I-95 INTERCHANGE - CHRISTIANA MALL ROAD BRIDGE	CONTRACT T201009004	BRIDGE NO. 1-223	LIGHTING DETAILS	SHEET NO. 134
				COUNTY NEW CASTLE	DESIGNED BY: SMK		TOTAL SHTS. 164
					CHECKED BY: HEH		

8/17/2010 2:57:43 PM
M:\PROJECTS\2003\03059_DELTRNPK\SRIMALL\CADD\3009004\PLANS\CP78_LI_RAMPR1.DGN

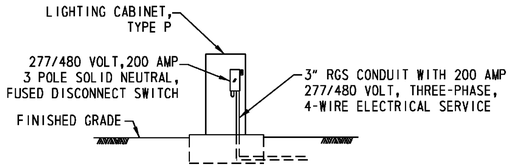

LIGHTING CONTROL AND DISTRIBUTION ENCLOSURE (REAR VIEW)

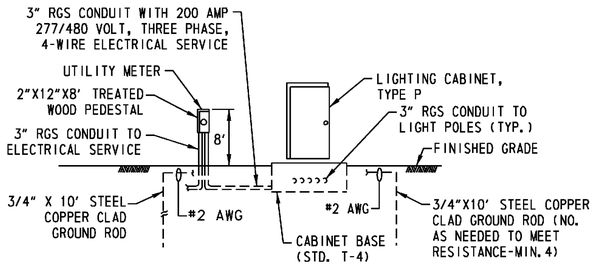

ELECTRICAL SERVICE ON PEDESTAL AND LIGHTING CONTROL AND DISTRIBUTION ENCLOSURE (FRONT VIEW)

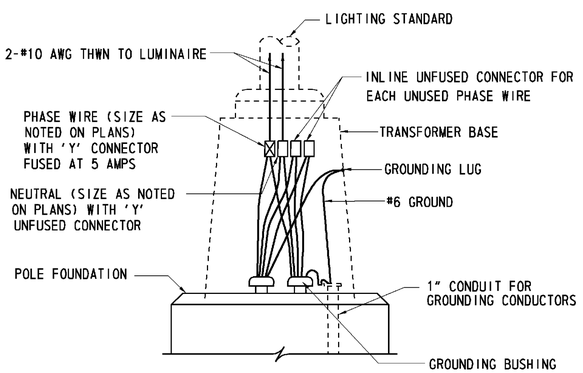

TYPICAL LUMINAIRE CONNECTION 277/480V

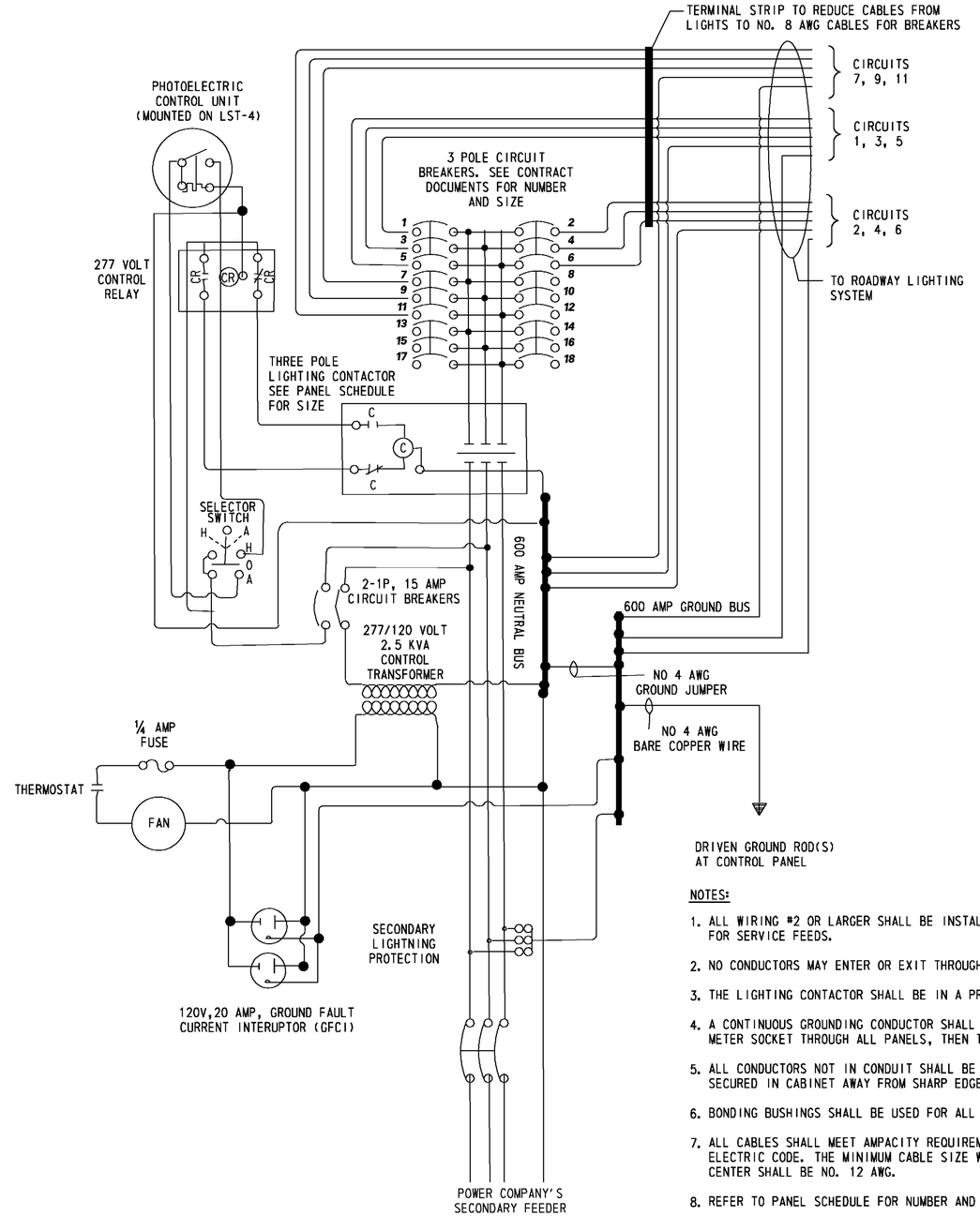

LIGHTING CONTROL CENTER WIRING DIAGRAM

NOTES:

1. ALL WIRING #2 OR LARGER SHALL BE INSTALLED IN FLEXIBLE CONDUIT FOR SERVICE FEEDS.
2. NO CONDUCTORS MAY ENTER OR EXIT THROUGH THE REAR OF ANY PANEL.
3. THE LIGHTING CONTACTOR SHALL BE IN A PROPERLY SIZED ENCLOSURE.
4. A CONTINUOUS GROUNDING CONDUCTOR SHALL BE INSTALLED FROM THE METER SOCKET THROUGH ALL PANELS, THEN TO THE GROUNDING ELECTRODE.
5. ALL CONDUCTORS NOT IN CONDUIT SHALL BE BUNDLED OR WRAPPED AND SECURED IN CABINET AWAY FROM SHARP EDGES.
6. BONDING BUSHINGS SHALL BE USED FOR ALL CONCENTRIC KNOCKOUTS.
7. ALL CABLES SHALL MEET AMPACITY REQUIREMENTS OF THE NATIONAL ELECTRIC CODE. THE MINIMUM CABLE SIZE WITHIN THE CONTROL CENTER SHALL BE NO. 12 AWG.
8. REFER TO PANEL SCHEDULE FOR NUMBER AND SIZE OF CIRCUIT BREAKERS.
9. WIRING DIAGRAM SHOWN IS FOR A TYPICAL ARRANGEMENT. SEE PANEL SCHEDULE FOR CIRCUIT DETAILS.

PANELBOARD - RAMP G1 LIGHTING CONTROL CENTER

277/480V
3 PHASE, 4 WIRE + GND
200 AMP M.C.B.

600 AMP BUS
200 AMP 3P CONTACTOR
LUMINAIRE VOLTAGE: 277 VOLTS

CKT. NO.	EQUIPMENT SERVED	CONNECTED LOAD		PHASE AND VOLTS	BRANCH CIRCUIT BREAKERS			REMARKS	CKT. NO.	EQUIPMENT SERVED	CONNECTED LOAD		PHASE AND VOLTS	BRANCH CIRCUIT BREAKERS			REMARKS
		KW	AMPS		NUMBER OF POLES	FRAME SIZE	TRIP SIZE				KW	AMPS		NUMBER OF POLES	FRAME SIZE	TRIP SIZE	
1	LST: 1,3,4	1.00	3.6	3/277	3	100	20A	3-250 WATT HPS	2	HM: 2-6	2.44	8.8	3/277	3	100	20A	2-1000 WATT HPS
3	LST: 2,3,5	1.00	3.6	3/277				3-250 WATT HPS	4	HM: 2-6	2.44	8.8	3/277				2-1000 WATT HPS
5	LST: 2,6	0.624	2.4	3/277				2-250 WATT HPS	6	HM: 2-6	2.44	8.8	3/277				2-1000 WATT HPS
7	SPARE				3	100	20A	SPARE	8	HM: 2-7 UP: 1,3	2.60	9.4	3/277	3	100	20A	2-1000 WATT HPS 2-70 WATT HPS
9	SPARE								10	HM: 2-7 UP: 2,4	2.60	9.4	3/277				2-1000 WATT HPS 2-70 WATT HPS
11	SPARE								12	HM: 2-7 LST: 7	2.77	10.0	3/277				2-1000 WATT HPS 1-250 WATT HPS
13	SPACE								14	SPACE							
15	SPACE								16	SPACE							
17	SPACE								18	SPACE							
19	SPACE								20	SPACE							
21	SPACE								22	SPACE							
23	SPACE								24	SPACE							

NOTE: PANELBOARD SHALL HAVE A MINIMUM SIZE OF 24 SPACES TO ACCOMMODATE FUTURE USE.

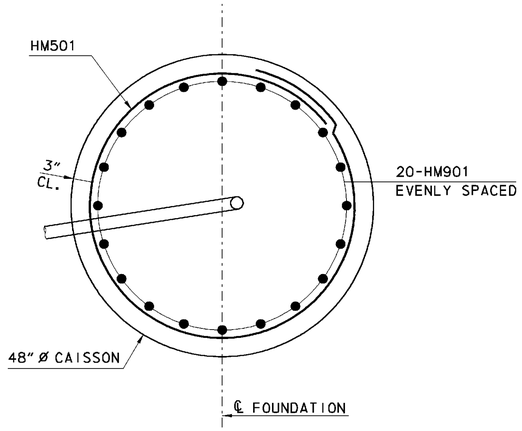

PLAN
HIGH MAST LIGHTING FOUNDATION

SCALE: 1"= 1'-0"

HIGH MAST LIGHTING FOUNDATION LENGTHS	
NO.	A
HM 2-6	15'-0"

GENERAL NOTES

SPECIFICATIONS: DELDOT STANDARD SPECIFICATIONS, AUGUST 2001 AND ALL CURRENT INTERIMS.

STANDARD SPECIFICATIONS FOR STRUCTURAL SUPPORTS FOR HIGHWAY SIGNS, LUMINAIRES AND TRAFFIC SIGNALS, 4TH EDITION, 2001, AND ALL CURRENT INTERIMS.

PORTLAND CEMENT CONCRETE : CONCRETE SHALL CONFORM TO SECTION 812, CLASS B.

REINFORCEMENT: REINFORCEMENT SHALL CONFORM TO SECTION 603, GRADE 60.

ANCHOR BOLTS: ANCHOR BOLTS SHALL BE HOT-DIPPED GALVANIZED AND MEET THE REQUIREMENTS OF AASHTO M 314. ANCHOR BOLTS SHALL HAVE A MINIMUM YIELD STRENGTH OF 55,000 PSI.

NOTES

1. COORDINATE ANCHOR BOLT PLACEMENT AND EMBEDMENT LENGTH WITH HIGH MAST POLE MANUFACTURER.
2. THE CONCRETE PAD IS TO BE LOCATED ON THE HINGED SIDE OF THE POLE. CONSULT THE ENGINEER TO DETERMINE THE LOWERING DIRECTION OF THE POLE.
3. PAYMENT FOR HIGH MAST LIGHTING FOUNDATIONS SHALL BE PAID FOR UNDER ITEM #602774, PCC MASONRY FOR LIGHT POLE FOUNDATION.

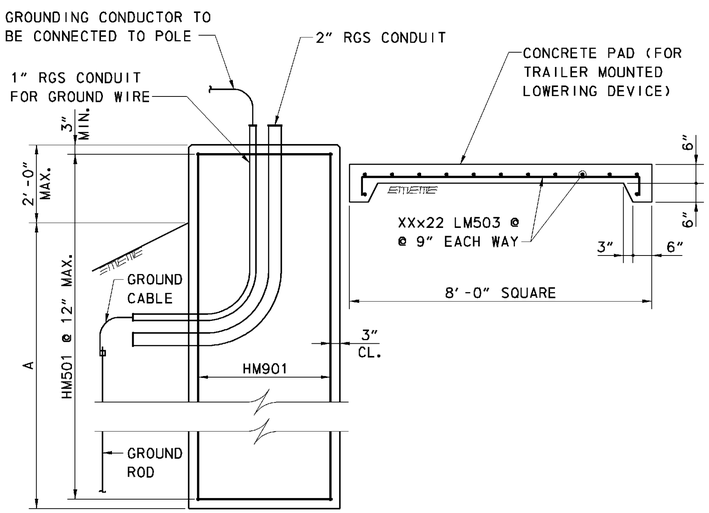

ELEVATION
HIGH MAST LIGHTING FOUNDATION

SCALE: NTS

REINFORCING BAR CHART							
QTY.	SIZE	LENGTH	MARK	TYPE	B	C	O
18	5	13'-0"	HM501	T3	2'-2"	10'-10"	3'-5⅜"
20	9	16'-6"	HM901	STR			

(ASSUMES A+2.0' FOR LENGTHS, ADJUST AS NECESSARY)

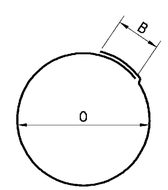

C= CIRCUMFERENCE

TYPE T3

0 1 ½ 2

SCALE: 1"=1'-0"

LI-10

DELAWARE DEPARTMENT OF TRANSPORTATION

ADDENDUMS / REVISIONS

SCALE AS NOTED

SR1/I-95 INTERCHANGE - CHRISTIANA MALL ROAD BRIDGE

CONTRACT	BRIDGE NO.	1-223
T201009004	DESIGNED BY:	JMS
COUNTY		
NEW CASTLE	CHECKED BY:	JSW

HIGHMAST LIGHTING FOUNDATIONS

SHEET NO. 137 / TOTAL SHTS. 164

8/17/2010 10:00:06 AM
M:\PROJECTS\2003\03059_DELTRNPK\SRIMALL\CADD\3009004\PLANS\CP78A_LI_RAMPR1.DGN

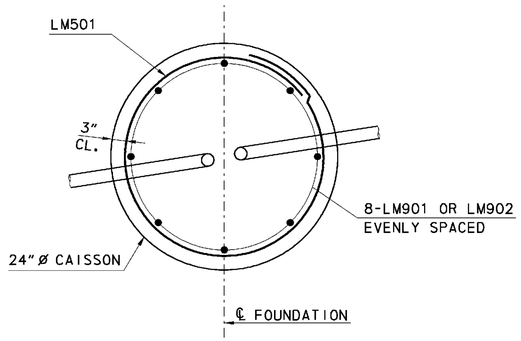

PLAN
LOW LEVEL LIGHTING FOUNDATION

SCALE: 1½"=1'-0"

LOW LEVEL LIGHTING FOUNDATION LENGTHS	
NO.	A
LST-1	10'-0"
LST-2	10'-0"
LST-3	10'-0"
LST-4	10'-0"
LST-5	10'-0"
LST-6	10'-0"
LST-7	10'-0"

GENERAL NOTES

SPECIFICATIONS: DELDOT STANDARD SPECIFICATIONS, AUGUST 2001 AND ALL CURRENT INTERIMS.

STANDARD SPECIFICATIONS FOR STRUCTURAL SUPPORTS FOR HIGHWAY SIGNS, LUMINAIRES AND TRAFFIC SIGNALS, 4TH EDITION, 2001, AND ALL CURRENT INTERIMS.

PORTLAND CONCRETE CEMENT: CONCRETE SHALL CONFORM TO SECTION 812, CLASS B.

REINFORCEMENT: REINFORCEMENT SHALL CONFORM TO SECTION 603, GRADE 60.

ANCHOR BOLTS: ANCHOR BOLTS SHALL BE HOT-DIPPED GALVANIZED AND MEET THE REQUIREMENTS OF AASHTO M 314. ANCHOR BOLTS SHALL HAVE A MINIMUM YIELD STRENGTH OF 55,000 PSI.

NOTES

1. COORDINATE ANCHOR BOLT PLACEMENT AND EMBEDMENT LENGTH WITH LOW LEVEL POLE MANUFACTURER.
2. PAYMENT FOR LOW LIGHTING FOUNDATIONS SHALL BE PAID FOR UNDER ITEM 602774, PCC MASONRY FOR LIGHT POLE FOUNDATION.

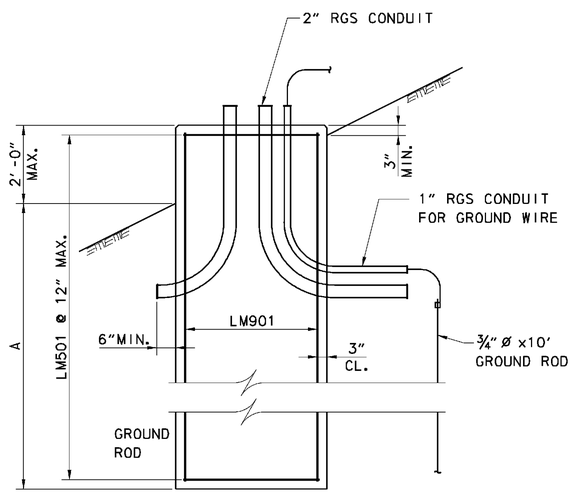

ELEVATION
LOW LEVEL LIGHTING FOUNDATION

SCALE: NTS

REINFORCING BAR CHART							
QTY.	SIZE	LENGTH	MARK	TYPE	B	C	O
78	5	6'-8½"	LM501	T3	2'-2"	4'-6½"	1'-5⅜"
42	9	11'-6"	LM901	STR			
8	9	9'-6"	LM902	STR			

(ASSUMES A+2.0' FOR LENGTHS, ADJUST AS NECESSARY)

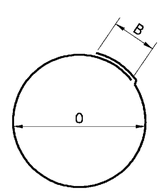

C= CIRCUMFERENCE

TYPE T3

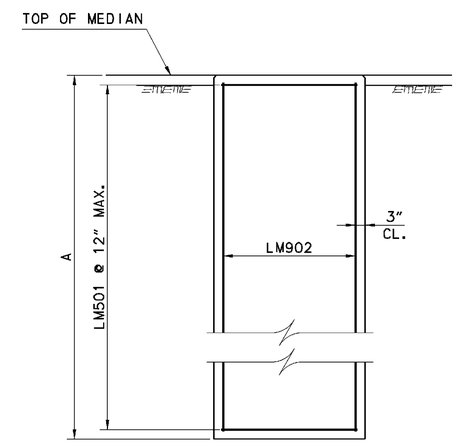

ELEVATION
LOW LEVEL LIGHTING FOUNDATION
(LST-3)

SCALE: NTS

0 ½ 1 2

SCALE: 1½"=1'-0"

DELAWARE DEPARTMENT OF TRANSPORTATION	ADDENDUMS / REVISIONS	SCALE AS NOTED	SR1/I-95 INTERCHANGE - CHRISTIANA MALL ROAD BRIDGE	CONTRACT T201009004	BRIDGE NO. 1-223	LIGHTING DETAILS LIGHT POLE FOUNDATIONS	LI-11
				COUNTY NEW CASTLE	DESIGNED BY: JMS		SHEET NO. 138
					CHECKED BY: JSW		TOTAL SHTS. 164

8/17/2010 10:01:29 AM
M:\PROJECTS\2003\03059_DELTRNPK\SRTMALL\CADD\3009004\PLANS\CP78B_LIL_RAMPR1.DGN

SEE CONTRACT NO. T200809003 FOR INTERCHANGE CONSTRUCTION

UTILITY TEST HOLE SCHEDULE						
NO.	UTILITY	STATION	OFFSET	GRND EL.	COVER	O.D. & MATERIAL
TH-1	ELEC (DOT)	1276+93.24	86.77' RT	36.69	2.75	2.5" STEEL
TH-2	ELEC (DOT)	1277+40.25	117.01' LT	38.25	2.46	2.5" STEEL
TH-4	TELE (VER)	1273+18.37	254.33' LT	45.14	3.53	(6)4" PLAS. CONDUIT

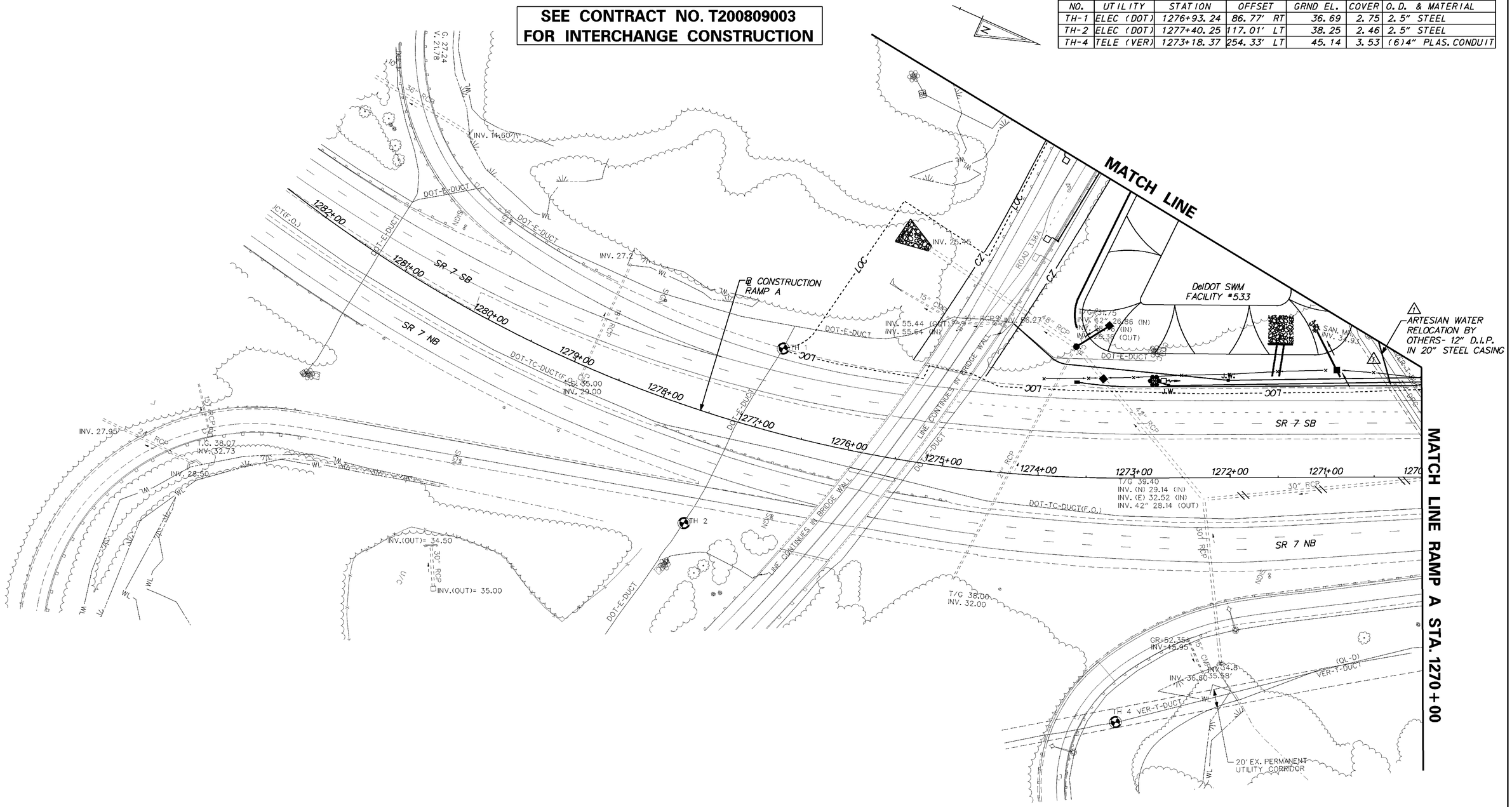

DELAWARE DEPARTMENT OF TRANSPORTATION

ADDENDUMS / REVISIONS	
ADDENDUM NO. 1, ADDED ARTESIAN RELOCATION BY OTHERS, 11/22/10 CDW	

SCALE: 0 50 100 150 FEET

SR1/I-95 INTERCHANGE - CHRISTIANA MALL ROAD BRIDGE

CONTRACT	BRIDGE NO.	1-223
T201009004	DESIGNED BY:	SNT
COUNTY		
NEW CASTLE	CHECKED BY:	CDW

UTILITY RELOCATION PLAN

SHEET NO.
139
TOTAL SHTS.
164

11/22/2010 10:30:53 AM
M:\PROJECTS\2003\03059_DELTRNPK\SRMALL\CADD\3009004\PLANS\UT01_RAMPR1.DGN

UTILITY TEST HOLE SCHEDULE						
NO.	UTILITY	STATION	OFFSET	GRND EL.	COVER	O.D. & MATERIAL
TH-5	WATER (A)	1337+36.07	51.08' RT	53.61	5.40	12.75" D.I.
TH-6	WATER (A)	1338+02.35	11.90' LT	54.37	4.67	12.75" D.I.
TH-7	TELE (VER)	1337+26.26	41.13' RT	54.56	4.37	(6)4" PLAS. COND.
TH-8	TELE (VER)	1337+95.09	22.20' LT	54.11	3.10	24"x14" RPC DUCT

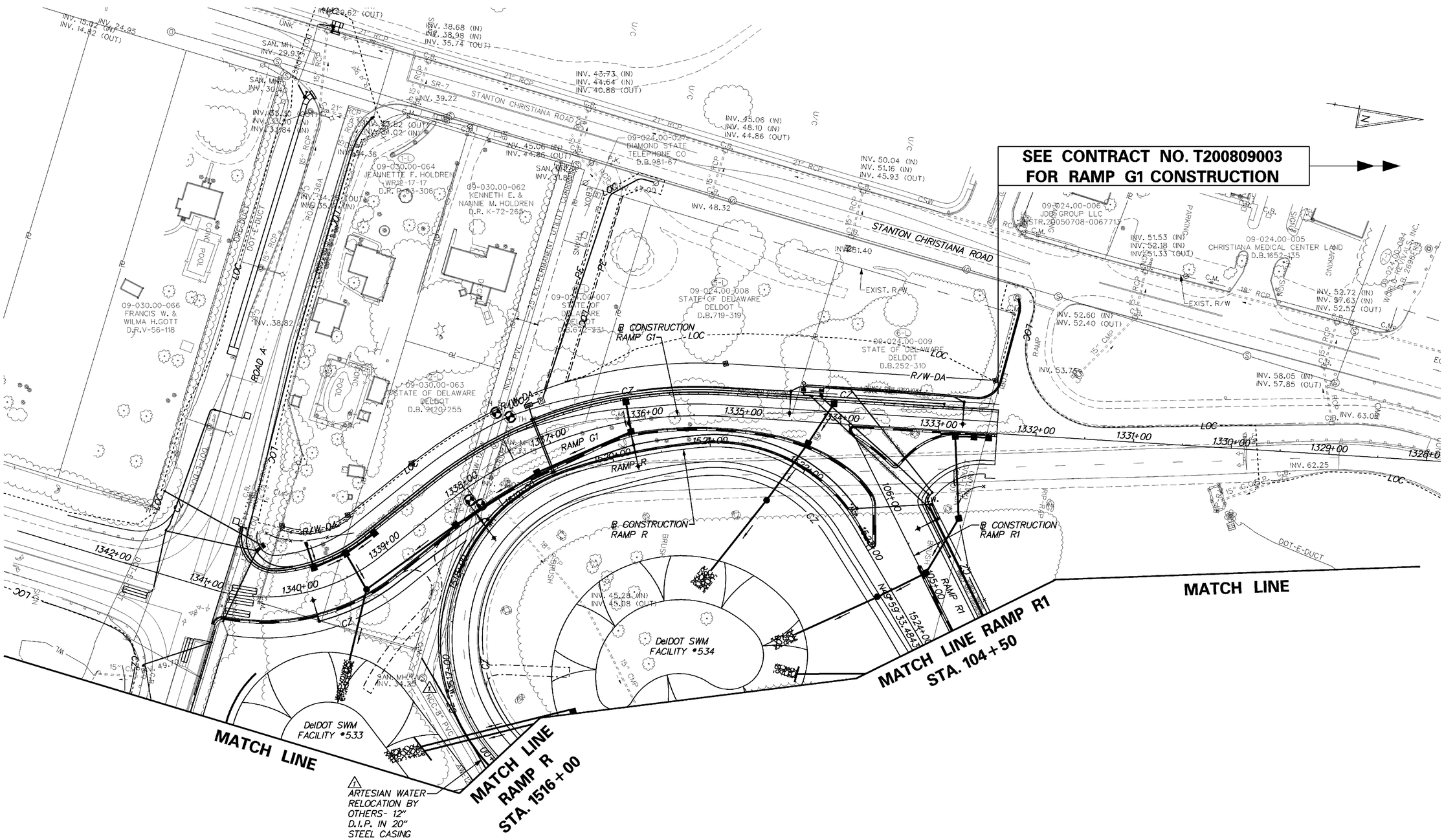

DELAWARE DEPARTMENT OF TRANSPORTATION	ADDENDUMS / REVISIONS	SCALE 0 50 100 150 FEET	SR1/I-95 INTERCHANGE - CHRISTIANA MALL ROAD BRIDGE	CONTRACT T201009004	BRIDGE NO. 1-223	UTILITY RELOCATION PLAN	SHEET NO. 140
	ADDENDUM NO. 1, ADDED ARTESIAN RELOCATION BY OTHERS, 11/22/10 CDW			COUNTY NEW CASTLE	DESIGNED BY: SNT		TOTAL SHTS.
					CHECKED BY: CDW		164

11/22/2010 10:40:23 AM
M:\PROJECTS\2003\03059_DELTRNPK\SRIMALL\CADD\3009004\PLANS\UT02_RAMPR1.DGN

SEE CONTRACT NO. T200809003 FOR INTERCHANGE CONSTRUCTION

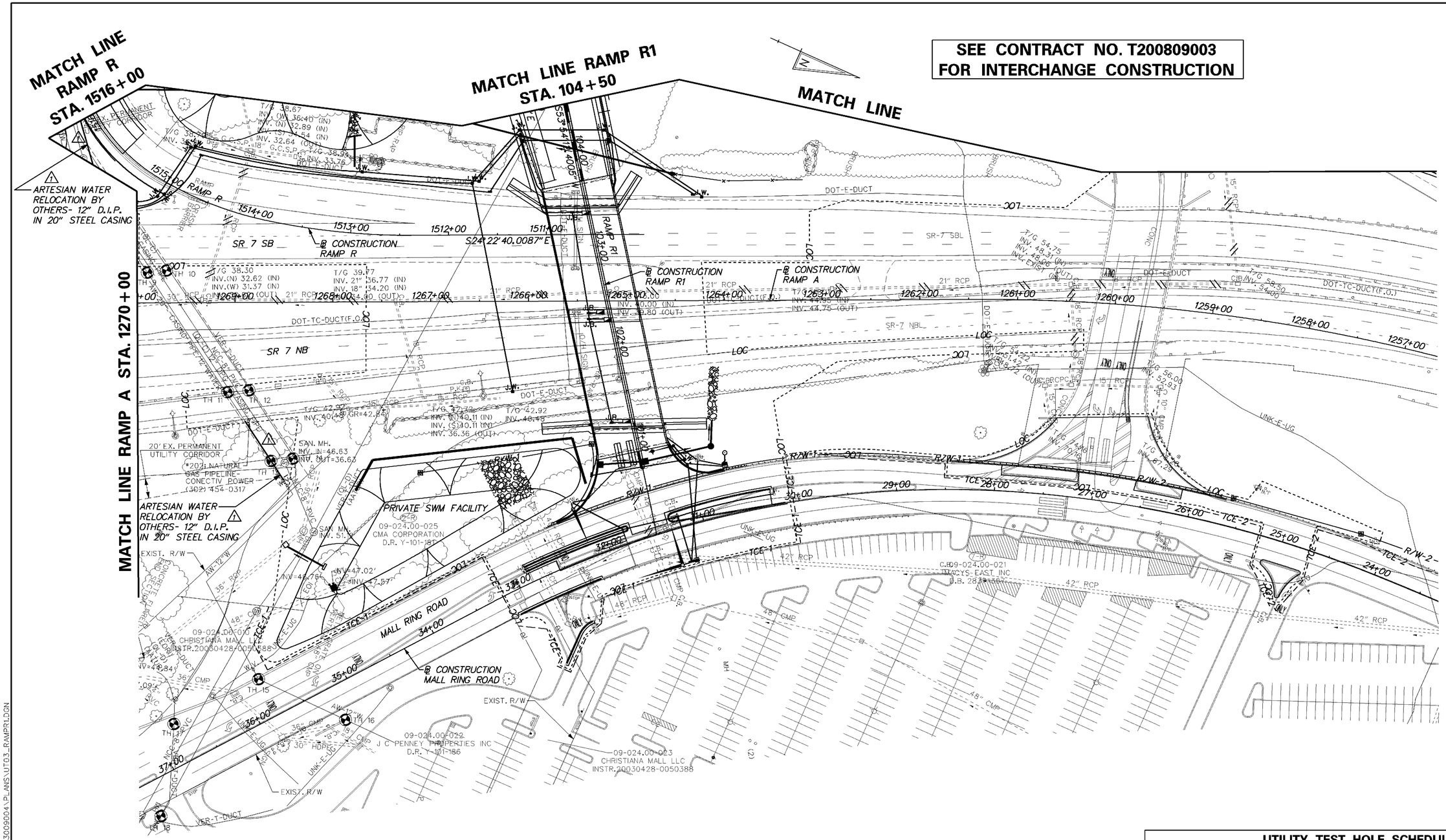

UTILITY TEST HOLE SCHEDULE

NO.	UTILITY	STATION	OFFSET	GRND EL.	COVER	O.D. & MATERIAL
TH-9	WATER (A)	1269+89.56	30.88' RT	43.41	7.61	21" STL CASING
	GAS			43.41	6.04	13" METALLIC
TH-10	TELE (VER)	1269+69.89	32.99' RT	43.55	6.60	24"x16" RPC DUCT
TH-11	WATER (A)	1269+07.89	91.71' LT	44.67	7.59	21" STL CASING
TH-12	TELE (VER)	1268+86.12	89.99' LT	44.48	6.80	24"x14" RPC DUCT
TH-13	WATER (A)	1268+63.92	162.34' LT	60.23	5.02	12.75" D.I.
TH-14	TELE (VER)	1268+41.44	159.97' LT	59.79	5.96	(6)4" PLAS. COND.
TH-15	WATER (A)	35+80.22	41.49' RT	61.03	4.21	12.75" D.I.
TH-16	WATER (A)	35+20.86	36.66' LT	61.50	4.57	12.75" D.I.

DELAWARE DEPARTMENT OF TRANSPORTATION

ADDENDUMS / REVISIONS

ADDENDUM NO. 1, ADDED ARTESIAN RELOCATION BY OTHERS, 11/22/10 CDW

SCALE: 0 50 100 150 FEET

SR1/I-95 INTERCHANGE - CHRISTIANA MALL ROAD BRIDGE

CONTRACT	BRIDGE NO.	1-223
T201009004	DESIGNED BY:	SNT
COUNTY		
NEW CASTLE	CHECKED BY:	CDW

UTILITY RELOCATION PLAN

SHEET NO. 141

TOTAL SHTS. 164

11/22/2010 11:48:02 AM
M:\PROJECTS\2003\03059_DELTRNPK\SRIMALL\CADD\3009004\PLANS\UT03_RAMPR1.DGN

CONDUIT RUN SCHEDULE					
CR*	#OF CON	SIZE	LENGTH	B/T/O	AMOUNT AND TYPE OF CABLE/ WIRE
* 1	1	4"	350'/100'	T/B	Empty

B = BORE, T = TRENCH, O = OPEN CUT.
* QUANTITY REFLECTS CONTINUATION OF PATHWAY SHOWN ON SSC-3

SEE CONTRACT NO. T200809003 FOR INTERCHANGE CONSTRUCTION

SIGNING LEGEND	
1	REMOVE EXISTING SIGN
2	EXISTING SIGN TO REMAIN
3	PLACE NEW SIGN
4	RENEW EXISTING SIGN
5	REPOSITION EXISTING SIGN

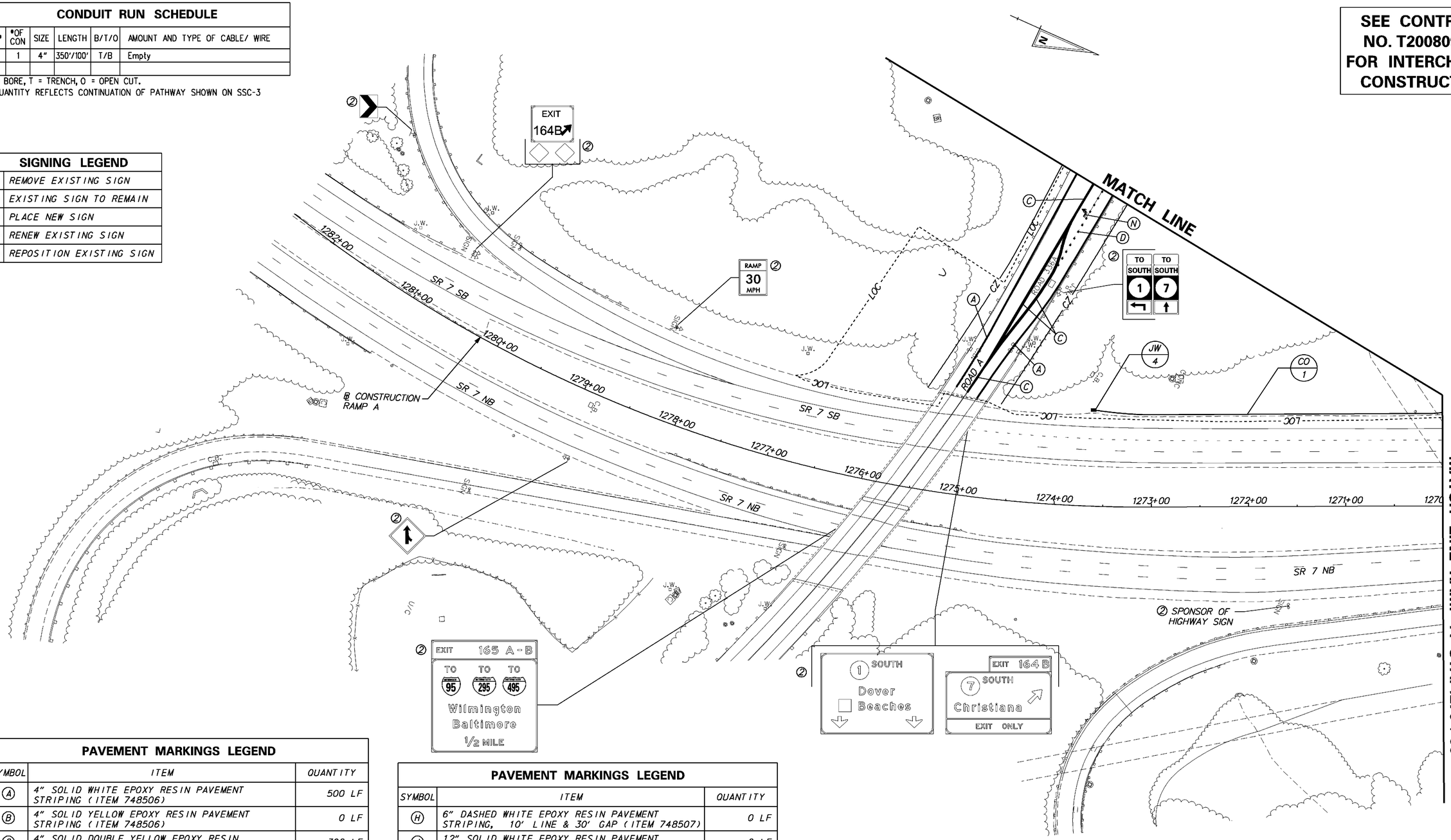

PAVEMENT MARKINGS LEGEND		
SYMBOL	ITEM	QUANTITY
A	4" SOLID WHITE EPOXY RESIN PAVEMENT STRIPING (ITEM 748506)	500 LF
B	4" SOLID YELLOW EPOXY RESIN PAVEMENT STRIPING (ITEM 748506)	0 LF
C	4" SOLID DOUBLE YELLOW EPOXY RESIN PAVEMENT STRIPING (ITEM 748506)	390 LF
D	4" DASHED WHITE EPOXY RESIN PAVEMENT STRIPING, 2' LINE & 6' GAP (ITEM 748506)	24 LF
E	4" DASHED WHITE EPOXY RESIN PAVEMENT STRIPING, 10' LINE & 30' GAP (ITEM 748506)	0 LF
F	6" SOLID WHITE EPOXY RESIN PAVEMENT STRIPING (ITEM 748507)	0 LF
G	6" SOLID YELLOW EPOXY RESIN PAVEMENT STRIPING (ITEM 748507)	0 LF

PAVEMENT MARKINGS LEGEND		
SYMBOL	ITEM	QUANTITY
H	6" DASHED WHITE EPOXY RESIN PAVEMENT STRIPING, 10' LINE & 30' GAP (ITEM 748507)	0 LF
J	12" SOLID WHITE EPOXY RESIN PAVEMENT STRIPING (ITEM 748509)	0 LF
K	12" DASHED WHITE EPOXY RESIN PAVEMENT STRIPING, 3' LINE & 9' GAP (ITEM 748509)	0 LF
L	12" SOLID YELLOW ALKYD THERMOPLASTIC PAVEMENT STRIPING (ITEM 748027)	0 LF
M	16" SOLID WHITE ALKYD THERMOPLASTIC PAVEMENT STRIPING (ITEM 748015)	0 SF
N	WHITE ALKYD THERMOPLASTIC PAVEMENT SYMBOL (ITEM 748015)	15.5 SF

10/8/2010 9:05:06 AM
M:\PROJECTS\2003\03059_DELTRNPK\SRIMALL\CADD\3009004\PLANS\CP81_SSC_RAMPR1.DGN

DELAWARE DEPARTMENT OF TRANSPORTATION

ADDENDUMS / REVISIONS

SCALE 0 50 100 150 FEET

SR1/I-95 INTERCHANGE - CHRISTIANA MALL ROAD BRIDGE

CONTRACT	BRIDGE NO. 1-223
T201009004	DESIGNED BY: JCR
COUNTY	
NEW CASTLE	CHECKED BY: CDW

SIGNING, STRIPING & CONDUIT PLAN

SSC-1
SHEET NO. 142
TOTAL SHTS. 164

PAVEMENT MARKINGS LEGEND

SYMBOL	ITEM	QUANTITY
(A)	4" SOLID WHITE EPOXY RESIN PAVEMENT STRIPING (ITEM 748506)	3,515 LF
(B)	4" SOLID YELLOW EPOXY RESIN PAVEMENT STRIPING (ITEM 748506)	1,210 LF
(C)	4" SOLID DOUBLE YELLOW EPOXY RESIN PAVEMENT STRIPING (ITEM 748506)	950 LF
(D)	4" DASHED WHITE EPOXY RESIN PAVEMENT STRIPING, 2' LINE & 6' GAP (ITEM 748506)	250 LF
(E)	4" DASHED WHITE EPOXY RESIN PAVEMENT STRIPING, 10' LINE & 30' GAP (ITEM 748506)	160 LF
(F)	6" SOLID WHITE EPOXY RESIN PAVEMENT STRIPING (ITEM 748507)	675 LF
(G)	6" SOLID YELLOW EPOXY RESIN PAVEMENT STRIPING (ITEM 748507)	720 LF

PAVEMENT MARKINGS LEGEND

SYMBOL	ITEM	QUANTITY
(H)	6" DASHED WHITE EPOXY RESIN PAVEMENT STRIPING, 10' LINE & 30' GAP (ITEM 748507)	0 LF
(J)	12" SOLID WHITE EPOXY RESIN PAVEMENT STRIPING (ITEM 748509)	0 LF
(K)	12" DASHED WHITE EPOXY RESIN PAVEMENT STRIPING, 3' LINE & 9' GAP (ITEM 748509)	0 LF
(L)	12" SOLID YELLOW ALKYD THERMOPLASTIC PAVEMENT STRIPING (ITEM 748027)	0 LF
(M)	16" SOLID WHITE ALKYD THERMOPLASTIC PAVEMENT STRIPING (ITEM 748015)	112 SF
(N)	WHITE ALKYD THERMOPLASTIC PAVEMENT SYMBOL (ITEM 748015)	370.5 SF

CONDUIT RUN SCHEDULE

CR*	#OF CON	SIZE	LENGTH	B/T/O	AMOUNT AND TYPE OF CABLE/ WIRE
2	1	4"	510'	T	COMM. CABLE
3	1	4"	40'	T	COMM. CABLE
4	1	4"	580'	T	COMM. CABLE
5	1	4"	10'	T	COMM. CABLE
6	1	4"	10'	T	COMM. CABLE
7	3	2.5"	10'	T	COMM. CABLE
8	1	2"	50'	T	(1)2/#8 U.F. W/ GROUND
9	1	2"	250'	T	(2)2/#8 U.F. W/ GROUND
10	1	4"	70'	T	COMM. CABLE
* 11	1	4"	170'	T	COMM. CABLE /(2)2/#8 U.F. W/ GROUND

B = BORE, T = TRENCH, O = OPEN CUT.
* QUANTITY REFLECTS CONTINUATION OF PATHWAY SHOWN ON SSC-3

NOTES:

1. PROPOSED SIGNAL EQUIPMENT SHOWN FOR REFERENCE PURPOSES ONLY. SEE SIGNAL PLAN SHEET FOR FULL DESIGN ELEMENTS.
2. CONTRACTOR SHALL REMOVE EXISTING STRIPING AS NEEDED (748530).
3. THE CONTRACTOR SHALL INSTALL A FLEXIBLE DELINEATOR ON ALL THREE (3) CORNERS OF THE CHANNELIZING ISLANDS, AS SHOWN. EACH FLEXIBLE DELINEATOR SHALL BE RETROREFLECTORIZED IN ACCORDANCE WITH SECTION 6F.60 OF THE DE-MUTCD.
4. THE CONTRACTOR SHALL INSTALL AND REMOVE THE REGULATORY, WARNING, AND SPECIAL SIGNS AND POSTS WITHIN THE CONTRACT LIMITS, AS SHOWN. DELDOT SHALL FABRICATE AND SUPPLY THE REGULATORY, WARNING, AND SPECIAL SIGNS AND POSTS TO THE CONTRACTOR. FOR COORDINATION AND PICK UP OF ALL SIGNS AND POSTS, THE CONTRACTOR SHALL CONTACT DELDOT'S SIGN SHOP AT (302)760-2581. ALLOW FOUR (4) WEEKS FOR DELIVERY. ALL SIGNING MATERIALS REMOVED FROM THIS PROJECT SHALL BE RETURNED TO DELDOT'S SIGN SHOP.
5. CONTRACTOR SHALL INSTALL RAISED PAVEMENT MARKERS IN ACCORDANCE WITH THE DE-MUTCD.

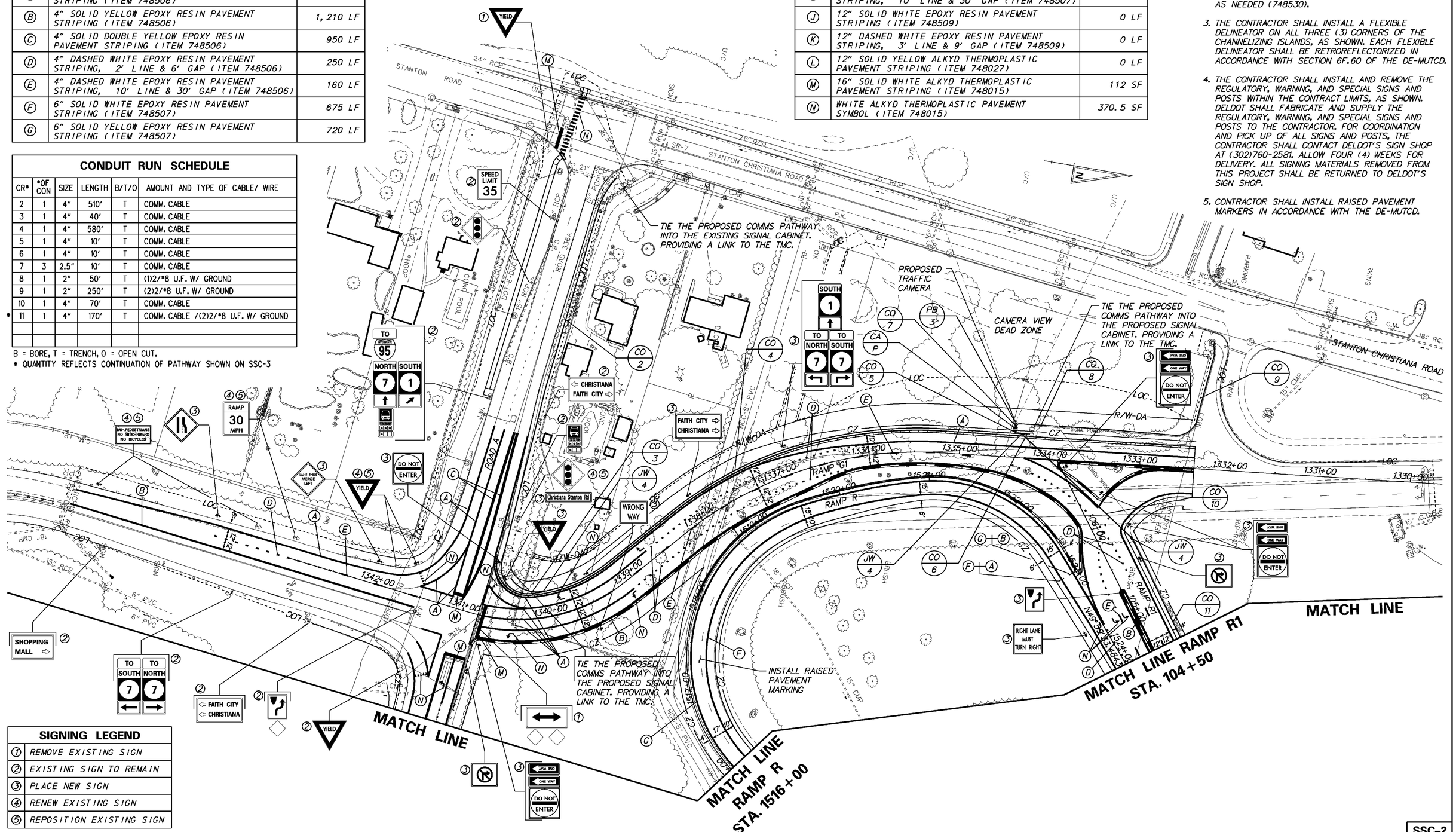

SIGNING LEGEND

(1)	REMOVE EXISTING SIGN
(2)	EXISTING SIGN TO REMAIN
(3)	PLACE NEW SIGN
(4)	RENEW EXISTING SIGN
(5)	REPOSITION EXISTING SIGN

10/8/2010 9:14:08 AM
M:\projects\2003\03059_delmpk\SR1Mall\Cadd\3009004\Plans\cp83_SSC_RampR1.dgn

DELAWARE DEPARTMENT OF TRANSPORTATION

ADDENDUMS / REVISIONS

SCALE 0 50 100 150 FEET

SR1/I-95 INTERCHANGE – CHRISTIANA MALL ROAD BRIDGE

CONTRACT	BRIDGE NO. 1-223
T201009004	DESIGNED BY: JCR
COUNTY NEW CASTLE	CHECKED BY: CDW

SIGNING, STRIPING & CONDUIT PLAN

SSC-2
SHEET NO. 143
TOTAL SHTS. 164

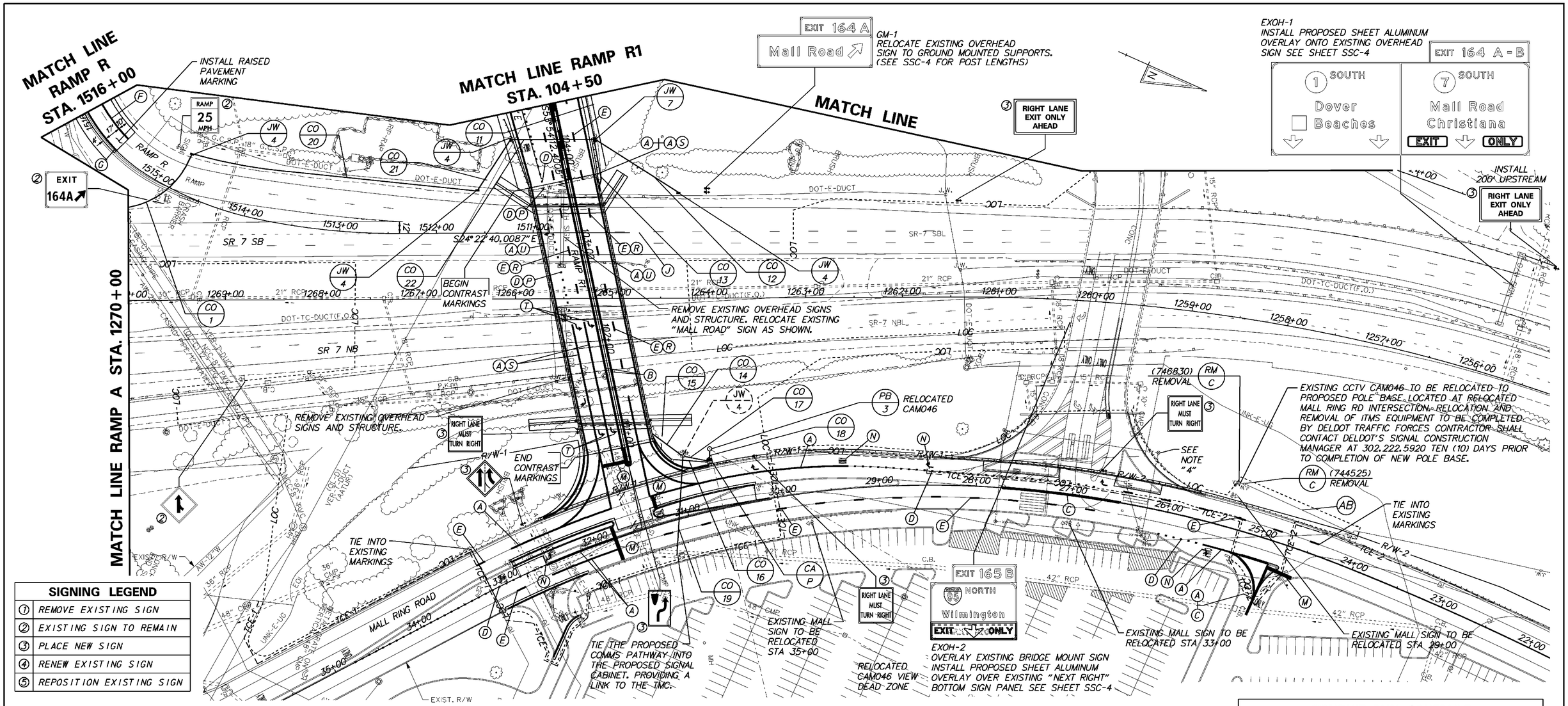

SIGNING LEGEND

1	REMOVE EXISTING SIGN
2	EXISTING SIGN TO REMAIN
3	PLACE NEW SIGN
4	RENEW EXISTING SIGN
5	REPOSITION EXISTING SIGN

PAVEMENT MARKINGS LEGEND

SYMBOL	ITEM	QUANTITY
A	4" SOLID WHITE EPOXY RESIN PAVEMENT STRIPING (ITEM 748506)	1,900 LF
B	4" SOLID YELLOW EPOXY RESIN PAVEMENT STRIPING (ITEM 748506)	780 LF
C	4" SOLID DOUBLE YELLOW EPOXY RESIN PAVEMENT STRIPING (ITEM 748506)	145 LF
D	4" DASHED WHITE EPOXY RESIN PAVEMENT STRIPING, 2' LINE & 6' GAP (ITEM 748506)	190 LF
E	4" DASHED WHITE EPOXY RESIN PAVEMENT STRIPING, 10' LINE & 30' GAP (ITEM 748506)	295 LF
F	6" SOLID WHITE EPOXY RESIN PAVEMENT STRIPING (ITEM 748507)	50 LF
G	6" SOLID YELLOW EPOXY RESIN PAVEMENT STRIPING (ITEM 748507)	50 LF
H	6" DASHED WHITE EPOXY RESIN PAVEMENT STRIPING, 10' LINE & 30' GAP (ITEM 748507)	0 LF
J	12" SOLID WHITE EPOXY RESIN PAVEMENT STRIPING (ITEM 748509)	0 LF

PAVEMENT MARKINGS LEGEND

SYMBOL	ITEM	QUANTITY
K	12" DASHED WHITE EPOXY RESIN PAVEMENT STRIPING, 3' LINE & 9' GAP (ITEM 748509)	0 LF
L	12" SOLID WHITE ALKYD THERMOPLASTIC PAVEMENT STRIPING (ITEM 748027)	0 LF
M	16" SOLID WHITE ALKYD THERMOPLASTIC PAVEMENT STRIPING (ITEM 748015)	72 SF
N	WHITE ALKYD THERMOPLASTIC PAVEMENT SYMBOL (ITEM 748015)	142 SF
P	4" SOLID BLACK EPOXY RESIN PAVEMENT STRIPING, 2' LINE & 6' GAP (ITEM 748535)	36 LF
R	4" SOLID BLACK EPOXY RESIN PAVEMENT STRIPING, 10' LINE & 30' GAP (ITEM 748535)	94 LF
S	8" SOLID BLACK EPOXY RESIN PAVEMENT STRIPING (ITEM 748537)	320 LF
T	WHITE RETROREFLECTIVE PREFORMED MARKINGS SYMBOL/LEGEND (ITEM 748529)	115 SF
U	3" SOLID BLACK EPOXY RESIN PAVEMENT STRIPING (ITEM 748557)	560 LF

NOTES:

1. PROPOSED SIGNAL EQUIPMENT SHOWN FOR REFERENCE PURPOSES ONLY. SEE SIGNAL PLAN SHEET FOR FULL DESIGN ELEMENTS.
2. CONTRACTOR SHALL REMOVE EXISTING STRIPING AS NEEDED (748530).
3. THE CONTRACTOR SHALL INSTALL AND REMOVE THE REGULATORY, WARNING, AND SPECIAL SIGNS AND POSTS WITHIN THE CONTRACT LIMITS, AS SHOWN. DELDOT SHALL FABRICATE AND SUPPLY THE REGULATORY, WARNING, AND SPECIAL SIGNS AND POSTS TO THE CONTRACTOR. FOR COORDINATION AND PICK UP OF ALL SIGNS AND POSTS, THE CONTRACTOR SHALL CONTACT DELDOT'S SIGN SHOP AT (302)760-2581. ALLOW FOUR (4) WEEKS FOR DELIVERY. ALL SIGNING MATERIALS REMOVED FROM THIS PROJECT SHALL BE RETURNED TO DELDOT'S SIGN SHOP.
4. DELDOT TRAFFIC FORCES TO REMOVE ALL EXISTING CABLE, SPAN WIRE, SIGNAL HEADS, CABINET, POLES AND INCIDENTAL ABOVE GROUND EQUIPMENT FROM THE EXISTING MALL RING ROAD SIGNAL UPON COMPLETION OF THE PROPOSED SIGNAL AT THE RELOCATED MALL RING ROAD. THE CONTRACTOR SHALL REMOVAL ALL POLE BASES AND JUNCTION WELLS IN ACCORDANCE WITH SECTION 201 AND 202 OF THE STANDARD SPECIFICATIONS OR AS DIRECTED BY THE ENGINEER, ANY EXISTING CONDUIT TO BE ABANDONED.
5. CONTRACTOR SHALL INSTALL RAISED PAVEMENT MARKERS IN ACCORDANCE WITH THE DE-MUTCD.

CONDUIT RUN SCHEDULE

CR*	*OF CON	SIZE	LENGTH	B/T/O	AMOUNT AND TYPE OF CABLE/ WIRE
1	PATHWAY INFORMATION SHOWN ON SSC-1				
11	PATHWAY INFORMATION SHOWN ON SSC-2				
12	1	4"	130'	T	Empty
13	1	3"	55'	T	COMM. CABLE
14	1	3"	40'	T	COMM. CABLE
** 15	1	2"	35'	T	(2)2/*8 U.F. W/ GROUND
16	1	2"	40'	T	(1)2/*8 U.F. W/ GROUND
17	1	4"	30'	T	COMM. CABLE
18	3	2.5"	15'	T	COMM. CABLE
19	1	4"	105'	B	COMM. CABLE
20	1	4"	295'	T	Empty
21	1	4"	85'	T	Empty
22	1	4"	90'	T	Empty

B = BORE, T = TRENCH, O = OPEN CUT.

** SHARED POWER PATHWAY FOR PROPOSED SIGNAL AND ITMS EQUIPMENT SHOW FOR INFORMATIONAL PURPOSES ONLY. SEE SG03 FOR ADDITIONAL INFORMATION.

DELAWARE DEPARTMENT OF TRANSPORTATION

ADDENDUMS / REVISIONS

SCALE 0 50 100 150 FEET

SR1/I-95 INTERCHANGE - CHRISTIANA MALL ROAD BRIDGE

CONTRACT	BRIDGE NO. 1-223
T201009004	DESIGNED BY: JCR
COUNTY	CHECKED BY: CDW
NEW CASTLE	

SIGNING, STRIPING & CONDUIT PLAN

SSC-3

SHEET NO. 144

TOTAL SHTS. 164

8/20/2010 4:08:20 PM
M:\projects\2003\03059_delranok\SR1Mall\Cadd\3009004\Plans\cp84_SSC_RampR1.dgn

PANEL DESIGNATION	SHEET NUMBER	QUANTITY	LEGEND	SIZE AREA	SIZE HEIGHT	SIZE WIDTH	COLOR LEGEND	COLOR BCKGRND	BORDER WIDTH	BORDER RADIUS	ARROW	SHIELD	REMARKS
EXOH-1	SSC-3	1	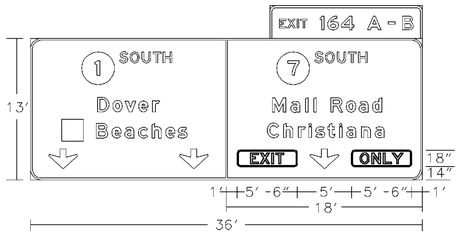	16.5 ²	1′-6″ 1′-6″	5′-6″ 5′-6″	B B	Y Y	1.125″ 1.125″	3″ 3″	- -	- -	- SHEET ALUMINUM - EXIT PLAQUE (E11-1a) 66″×18″ - ONLY PLAQUE (E11-1b) 66″×18″ - INSTALL PLAQUE TO EXISTING SIGN AS SHOWN
EXOH-2	SSC-3	1	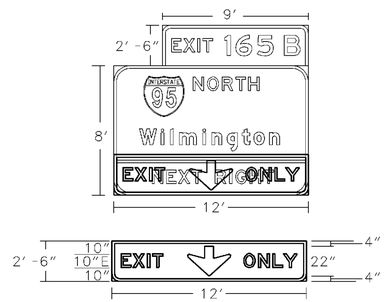	30 ²	2′-6″	12′-0″	B	Y	2″	12″	DOWN 22″	-	- INSTALL NEW SHEET ALUMINUM SIGN PANEL OVER EXISTING SIGN MESSAGE. - SHEET ALUMINUM

NOTES: 1. COLORS: B=BLACK, BL=BLUE, BR=BROWN, G=GREEN, W=WHITE/SILVER, Y=YELLOW.
2. THE CONTRACTOR WILL FURNISH AND INSTALL ALL SIGNS SHOWN ON THIS SHEET.

GROUND MOUNTED SIGN DETAIL

SIGN CLEARANCE

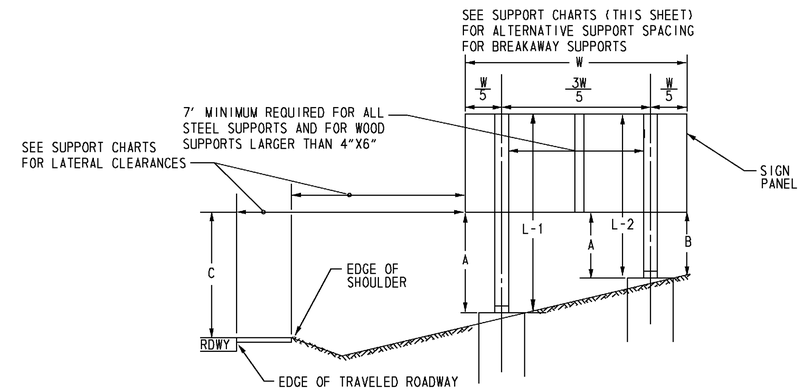

VERTICAL CLEARANCE OF SIGNS

A. 7′6″ MINIMUM FOR BREAKAWAY SUPPORTS OR 5′-6″ FOR NON-BREAKAWAY SUPPORTS.
B. 2.0′ MINIMUM
C. 7′6″ MINIMUM & PREFERABLE. THIS DIMENSION IS TO BE INCREASED ONLY WHEN REQUIRED TO MEET A = 7′-6″ FOR BREAKAWAY OR A (MIN.) = 5′-6″ FOR NON-BREAKAWAY AND B (MIN) 2′-0″

ALL DIMENSIONS ARE TO BOTTOM OF SIGN

*TOTAL WEIGHT BELOW THE HINGES SHOULD BE LESS THAN 600 POUNDS

LATERAL CLEARANCE

SEE SUPPORT CHARTS

** OBJECT CODES
W = FACE OF W-BEAM TRAFFIC BARRIER
FOC = FACE OF CURB
ES = EDGE OF SHOULDER
ETR = EDGE OF TRAVELED ROADWAY
CW = CENTERED IN MEDIAN
CG = CENTERED IN GORE (6′ MINIMUM FROM EDGE OF PAVEMENT)

GUIDE SIGN STEEL SUPPORT CHART

SIGN NO.	SHEET NO.	POST SIZE	*BW OR NBW	SUPPORT L - 1	SUPPORT L - 2	SUPPORT L - 3	LATERAL CLEARANCE OFFSET	LATERAL CLEARANCE OBJECT**	SUPPORT SPACING FROM LEFT EDGE OF SIGN
GM-1	SSC-3	W6×9	BW	12′-0″	12′-6″	-	10′	ES	3.2′ - 9.6′ - 3.2′

* BW = BREAKAWAY NBW = NON-BREAKAWAY

8/17/2010 3:08:45 PM
M:\projects\2003\03059_dettnpk\SR1Mall\Cadd\3009004\Plans\cp97_SSC_RampR1.dgn

DELAWARE
DEPARTMENT OF TRANSPORTATION

ADDENDUMS / REVISIONS

NOT TO SCALE

SR1/I-95 INTERCHANGE - CHRISTIANA MALL ROAD BRIDGE

CONTRACT	BRIDGE NO.	1-223
T201009004	DESIGNED BY: JCR	
COUNTY		
NEW CASTLE	CHECKED BY: CDW	

SIGNING, STRIPING & CONDUIT PLAN

SSC-4
SHEET NO.
145
TOTAL SHTS.
164

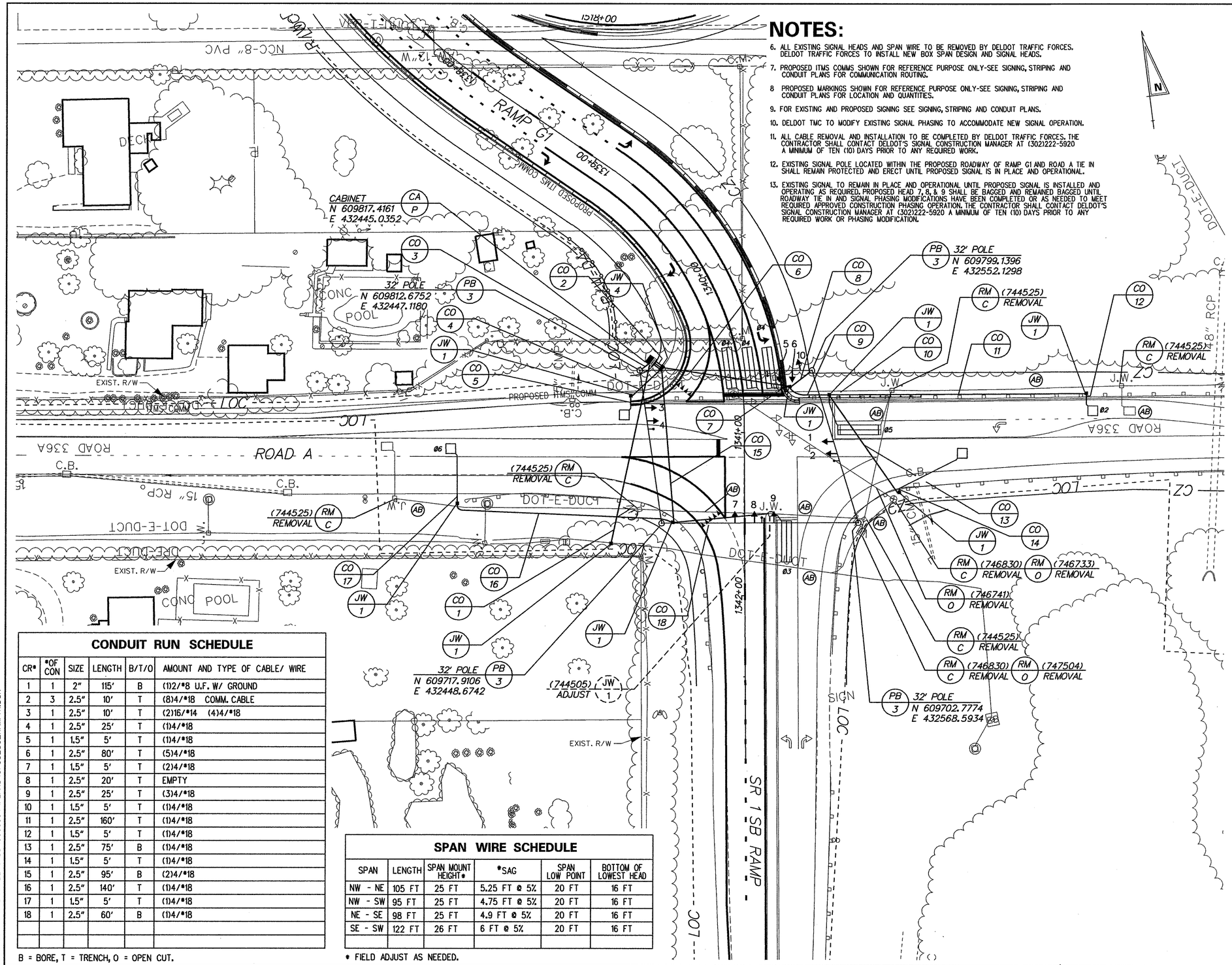

NOTES:

6. ALL EXISTING SIGNAL HEADS AND SPAN WIRE TO BE REMOVED BY DELDOT TRAFFIC FORCES. DELDOT TRAFFIC FORCES TO INSTALL NEW BOX SPAN DESIGN AND SIGNAL HEADS.
7. PROPOSED ITMS COMMS SHOWN FOR REFERENCE PURPOSE ONLY-SEE SIGNING, STRIPING AND CONDUIT PLANS FOR COMMUNICATION ROUTING.
8. PROPOSED MARKINGS SHOWN FOR REFERENCE PURPOSE ONLY-SEE SIGNING, STRIPING AND CONDUIT PLANS FOR LOCATION AND QUANTITIES.
9. FOR EXISTING AND PROPOSED SIGNING SEE SIGNING, STRIPING AND CONDUIT PLANS.
10. DELDOT TMC TO MODIFY EXISTING SIGNAL PHASING TO ACCOMMODATE NEW SIGNAL OPERATION.
11. ALL CABLE REMOVAL AND INSTALLATION TO BE COMPLETED BY DELDOT TRAFFIC FORCES. THE CONTRACTOR SHALL CONTACT DELDOT'S SIGNAL CONSTRUCTION MANAGER AT (302)222-5920 A MINIMUM OF TEN (10) DAYS PRIOR TO ANY REQUIRED WORK.
12. EXISTING SIGNAL POLE LOCATED WITHIN THE PROPOSED ROADWAY OF RAMP G1 AND ROAD A TIE IN SHALL REMAIN PROTECTED AND ERECT UNTIL PROPOSED SIGNAL IS IN PLACE AND OPERATIONAL.
13. EXISTING SIGNAL TO REMAIN IN PLACE AND OPERATIONAL UNTIL PROPOSED SIGNAL IS INSTALLED AND OPERATING AS REQUIRED. PROPOSED HEAD 7, 8, & 9 SHALL BE BAGGED AND REMAINED BAGGED UNTIL ROADWAY TIE IN AND SIGNAL PHASING MODIFICATIONS HAVE BEEN COMPLETED OR AS NEEDED TO MEET REQUIRED APPROVED CONSTRUCTION PHASING OPERATION. THE CONTRACTOR SHALL CONTACT DELDOT'S SIGNAL CONSTRUCTION MANAGER AT (302)222-5920 A MINIMUM OF TEN (10) DAYS PRIOR TO ANY REQUIRED WORK OR PHASING MODIFICATION.

CONDUIT RUN SCHEDULE

CR*	*OF CON	SIZE	LENGTH	B/T/O	AMOUNT AND TYPE OF CABLE/ WIRE
1	1	2"	115'	B	(1)2/*8 U.F. W/ GROUND
2	3	2.5"	10'	T	(8)4/*18 COMM. CABLE
3	1	2.5"	10'	T	(2)16/*14 (4)4/*18
4	1	2.5"	25'	T	(1)4/*18
5	1	1.5"	5'	T	(1)4/*18
6	1	2.5"	80'	T	(5)4/*18
7	1	1.5"	5'	T	(2)4/*18
8	1	2.5"	20'	T	EMPTY
9	1	2.5"	25'	T	(3)4/*18
10	1	1.5"	5'	T	(1)4/*18
11	1	2.5"	160'	T	(1)4/*18
12	1	1.5"	5'	T	(1)4/*18
13	1	2.5"	75'	B	(1)4/*18
14	1	1.5"	5'	T	(1)4/*18
15	1	2.5"	95'	B	(2)4/*18
16	1	2.5"	140'	T	(1)4/*18
17	1	1.5"	5'	T	(1)4/*18
18	1	2.5"	60'	B	(1)4/*18

B = BORE, T = TRENCH, O = OPEN CUT.

SPAN WIRE SCHEDULE

SPAN	LENGTH	SPAN MOUNT HEIGHT*	*SAG	SPAN LOW POINT	BOTTOM OF LOWEST HEAD
NW - NE	105 FT	25 FT	5.25 FT @ 5%	20 FT	16 FT
NW - SW	95 FT	25 FT	4.75 FT @ 5%	20 FT	16 FT
NE - SE	98 FT	25 FT	4.9 FT @ 5%	20 FT	16 FT
SE - SW	122 FT	26 FT	6 FT @ 5%	20 FT	16 FT

* FIELD ADJUST AS NEEDED.

SIGNAL PHASING

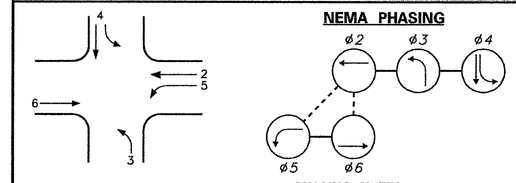

PHASING NOTES

1. PHASES ASSOCIATED BY A SOLID LINE WILL NOT OPERATE CONCURRENTLY.
2. PHASES ASSOCIATED BY A DASHED LINE WILL OPERATE CONCURRENTLY.

SIGNAL HEAD DIAGRAM

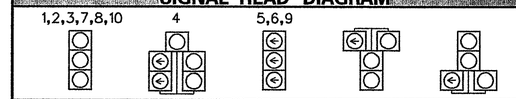

LEGEND

	PROPOSED SIGNAL CABINET	RM/C	REMOVE BY CONTRACTOR
	EXISTING SIGNAL CABINET	RM/O	REMOVE BY OTHERS
	PROPOSED SIGNAL POLE BASE	AB	ABANDON
	EXISTING SIGNAL POLE BASE	PB/X	PROPOSED POLE BASE IDENTIFIER (TYPE OF POLE BASE)
	PROPOSED PEDESTRIAN POLE BASE	PB/X	EXISTING POLE BASE IDENTIFIER (TYPE OF POLE BASE)
	EXISTING PEDESTRIAN POLE BASE	JW/X	PROPOSED JUNCTION WELL IDENTIFIER (TYPE OF JUNCTION WELL)
	PROPOSED WOOD POLE	JW/X	EXISTING JUNCTION WELL IDENTIFIER (TYPE OF JUNCTION WELL)
	EXISTING UTILITY POLE	CO/*	PROPOSED CONDUIT RUN IDENTIFIER (* OF CONDUIT RUN)
	PROPOSED JUNCTION WELL	CO/*	EXISTING CONDUIT RUN IDENTIFIER (* OF CONDUIT RUN)
J.W.	EXISTING JUNCTION WELL	OH/*	PROPOSED OVERHEAD RUN IDENTIFIER (* OF OVERHEAD RUN)
	PROPOSED SIGNAL HEAD	OH/*	EXISTING OVERHEAD RUN IDENTIFIER (* OF OVERHEAD RUN)
	EXISTING SIGNAL HEAD	MA/XX	PROPOSED MAST ARM IDENTIFIER (LENGTH OF ARM)
	PROPOSED PEDESTRIAN SIGNAL HEAD	MA/XX	EXISTING MAST ARM IDENTIFIER (LENGTH OF ARM)
	EXISTING PEDESTRIAN SIGNAL HEAD	CA/X	PROPOSED CABINET IDENTIFIER (TYPE OF CABINET)
	PROPOSED PEDESTRIAN PUSHBUTTON	CA/X	EXISTING CABINET IDENTIFIER (TYPE OF CABINET)
	EXISTING PEDESTRIAN PUSHBUTTON		PROPOSED SPAN WIRE
	PROPOSED VIDEO DETECTION		EXISTING SPAN WIRE
	EXISTING VIDEO DETECTION		RIGHT-OF-WAY OR PROPERTY LINE
	PROPOSED MICROWAVE DETECTION		PROPOSED SPAN INSULATOR
	EXISTING MICROWAVE DETECTION		EXISTING SPAN INSULATOR
	OVERHEAD SIGNING	P	SERVICE PEDESTAL
	PROPOSED OPTICOM RECEIVER		
	EXISTING OPTICOM RECEIVER		
	PROPOSED MAST ARM		
	EXISTING MAST ARM		
	PROPOSED LUMINAIRE		
	EXISTING LUMINAIRE		
	PROPOSED LOOP DETECTOR (TYPE 1 OR 2)		
	EXISTING LOOP DETECTOR (TYPE 1 OR 2)		

GENERAL SIGNAL NOTES

1. ALL SIGNAL POLES WILL BE 32 FEET, EXCEPT WHERE SHOWN.
2. ALL SIGNAL EQUIPMENT REMOVED FROM A PROJECT IS TO BE RETURNED TO DELDOT TRAFFIC - DOVER, DELAWARE.
3. POLE BASES, CABINET BASE AND CONDUIT JUNCTION WELLS TO BE REMOVED IN ACCORDANCE WITH SECTION 201 AND 202 OF THE STANDARD SPECIFICATIONS OR AS DIRECTED BY ENGINEER. EXISTING CONDUIT IS TO BE ABANDONED.
4. ALL GALVANIZED CONDUIT (GRC) SHALL BE REAMED AND THREADED. ALL GRC SHALL BE THREADED TOGETHER WITH APPROVED COUPLINGS. SET SCREW, BOLTED, AND COMPRESSION FITTING ARE NOT ACCEPTABLE.
5. ALL UNDERGROUND AND OVERHEAD UTILITIES SHOWN ON THESE PLANS ARE SCHEMATIC ONLY AND MAY NOT BE COMPLETE. THE CONTRACTOR SHALL BE RESPONSIBLE FOR NOTIFYING MISS UTILITY, AND/OR THE APPROPRIATE UTILITY PRIOR TO THE BEGINNING OF CONSTRUCTION FOR THE UTILITY MARKOUTS. IF THE CONTRACTOR PERCEIVES THAT A CONFLICT BETWEEN UTILITIES AND THE TRAFFIC SIGNAL WILL OCCUR, THE CONTRACTOR SHALL NOTIFY DELDOT TRAFFIC IMMEDIATELY BEFORE CONSTRUCTION.

RECOMMENDED _____ DATE: 8.24.10

RECOMMENDED _____ DATE: _____

RECOMMENDED _____ DATE: _____

APPROVED TRAFFIC ENGINEER _____ DATE: 8/24/10

APPROVED FOR INSTALLATION
CHIEF TRAFFIC ENGINEER _____ DATE: 8/24/10

DELAWARE DEPARTMENT OF TRANSPORTATION

ADDENDUM / REVISIONS

SCALE 0 30 60 90 FEET

SR1/I-95 INTERCHANGE - CHRISTIANA MALL ROAD BRIDGE

CONTRACT	PERMIT NO.	N-546
T201009004	DESIGNED BY: RKK	
COUNTY		
NEW CASTLE	CHECKED BY: JCR	

SIGNAL PLAN

DEL RT 1 SB Ramp @ ROAD A

SHEET NO. 146

TOTAL SHTS. 164

8/20/2010 11:30:44 AM
M:\PROJECTS\2003\03059_DEL TRNPK\SRIMALL\CADD\3009004\PLANS\CP98_SG_RAMPR1.DGN

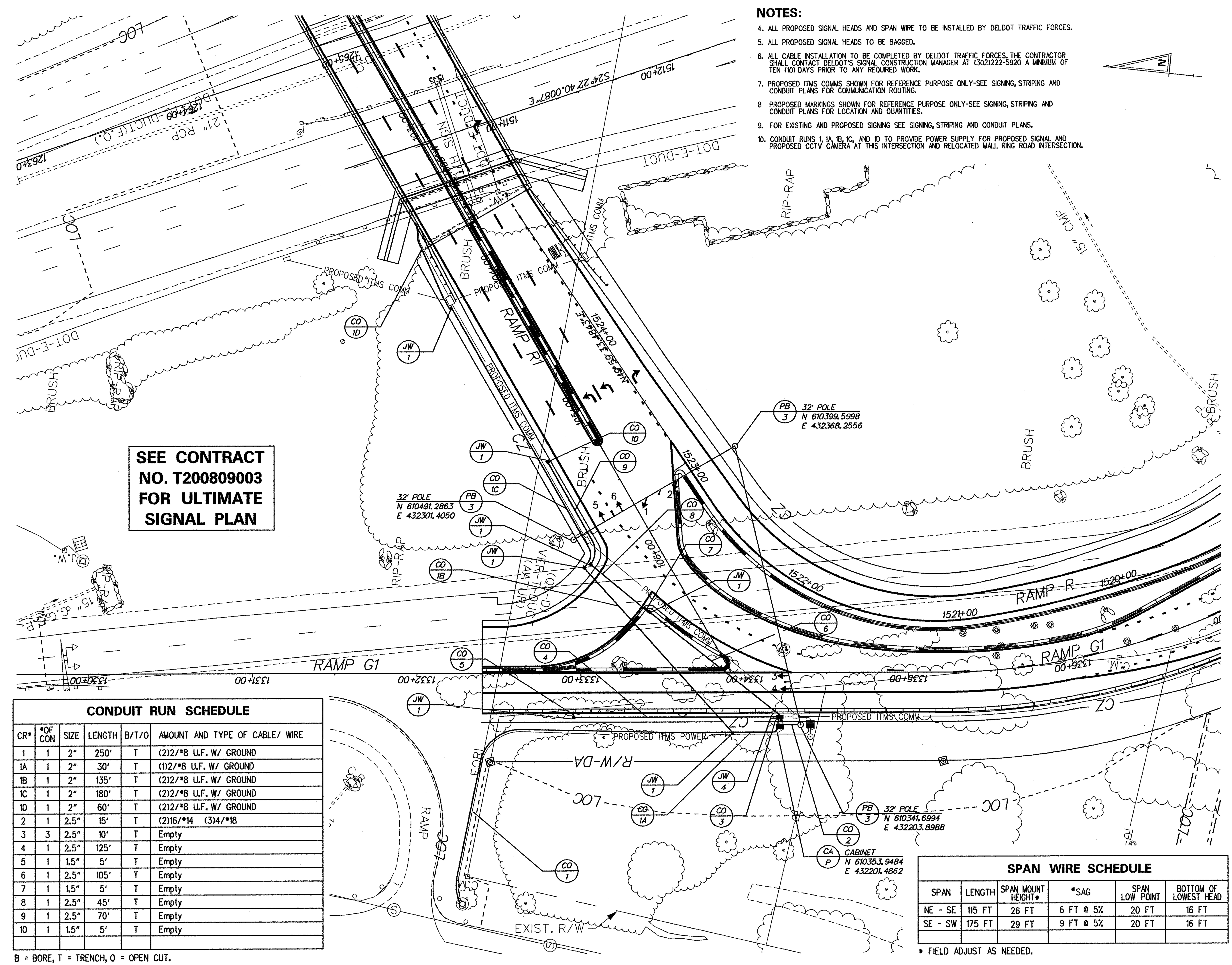

NOTES:

4. ALL PROPOSED SIGNAL HEADS AND SPAN WIRE TO BE INSTALLED BY DELDOT TRAFFIC FORCES.
5. ALL PROPOSED SIGNAL HEADS TO BE BAGGED.
6. ALL CABLE INSTALLATION TO BE COMPLETED BY DELDOT TRAFFIC FORCES. THE CONTRACTOR SHALL CONTACT DELDOT'S SIGNAL CONSTRUCTION MANAGER AT (302)222-5920 A MINIMUM OF TEN (10) DAYS PRIOR TO ANY REQUIRED WORK.
7. PROPOSED ITMS COMMS SHOWN FOR REFERENCE PURPOSE ONLY-SEE SIGNING, STRIPING AND CONDUIT PLANS FOR COMMUNICATION ROUTING.
8. PROPOSED MARKINGS SHOWN FOR REFERENCE PURPOSE ONLY-SEE SIGNING, STRIPING AND CONDUIT PLANS FOR LOCATION AND QUANTITIES.
9. FOR EXISTING AND PROPOSED SIGNING SEE SIGNING, STRIPING AND CONDUIT PLANS.
10. CONDUIT RUNS 1, 1A, 1B, 1C, AND 1D TO PROVIDE POWER SUPPLY FOR PROPOSED SIGNAL AND PROPOSED CCTV CAMERA AT THIS INTERSECTION AND RELOCATED MALL RING ROAD INTERSECTION.

CONDUIT RUN SCHEDULE

CR*	*OF CON	SIZE	LENGTH	B/T/O	AMOUNT AND TYPE OF CABLE/ WIRE
1	1	2"	250'	T	(2)2/*8 U.F. W/ GROUND
1A	1	2"	30'	T	(1)2/*8 U.F. W/ GROUND
1B	1	2"	135'	T	(2)2/*8 U.F. W/ GROUND
1C	1	2"	180'	T	(2)2/*8 U.F. W/ GROUND
1D	1	2"	60'	T	(2)2/*8 U.F. W/ GROUND
2	1	2.5"	15'	T	(2)16/*14 (3)4/*18
3	3	2.5"	10'	T	Empty
4	1	2.5"	125'	T	Empty
5	1	1.5"	5'	T	Empty
6	1	2.5"	105'	T	Empty
7	1	1.5"	5'	T	Empty
8	1	2.5"	45'	T	Empty
9	1	2.5"	70'	T	Empty
10	1	1.5"	5'	T	Empty

B = BORE, T = TRENCH, O = OPEN CUT.

SPAN WIRE SCHEDULE

SPAN	LENGTH	SPAN MOUNT HEIGHT*	*SAG	SPAN LOW POINT	BOTTOM OF LOWEST HEAD
NE - SE	115 FT	26 FT	6 FT @ 5%	20 FT	16 FT
SE - SW	175 FT	29 FT	9 FT @ 5%	20 FT	16 FT

* FIELD ADJUST AS NEEDED.

SIGNAL PHASING

SIGNAL HEAD DIAGRAM

1,2,3,4,5,6

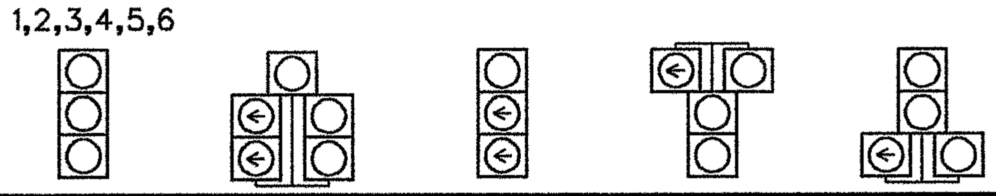

LEGEND

PROPOSED SIGNAL CABINET	REMOVE BY CONTRACTOR
EXISTING SIGNAL CABINET	REMOVE BY OTHERS
PROPOSED SIGNAL POLE BASE	ABANDON
EXISTING SIGNAL POLE BASE	PROPOSED POLE BASE IDENTIFIER (TYPE OF POLE BASE)
PROPOSED PEDESTRIAN POLE BASE	EXISTING POLE BASE IDENTIFIER (TYPE OF POLE BASE)
EXISTING PEDESTRIAN POLE BASE	PROPOSED JUNCTION WELL IDENTIFIER (TYPE OF JUNCTION WELL)
PROPOSED WOOD POLE	EXISTING JUNCTION WELL IDENTIFIER (TYPE OF JUNCTION WELL)
EXISTING UTILITY POLE	PROPOSED CONDUIT RUN IDENTIFIER (* OF CONDUIT RUN)
PROPOSED JUNCTION WELL	EXISTING CONDUIT RUN IDENTIFIER (* OF CONDUIT RUN)
EXISTING JUNCTION WELL	PROPOSED OVERHEAD RUN IDENTIFIER (* OF OVERHEAD RUN)
PROPOSED SIGNAL HEAD	EXISTING OVERHEAD RUN IDENTIFIER (* OF OVERHEAD RUN)
EXISTING SIGNAL HEAD	PROPOSED MAST ARM IDENTIFIER (LENGTH OF ARM)
PROPOSED PEDESTRIAN SIGNAL HEAD	EXISTING MAST ARM IDENTIFIER (LENGTH OF ARM)
EXISTING PEDESTRIAN SIGNAL HEAD	PROPOSED CABINET IDENTIFIER (TYPE OF CABINET)
PROPOSED PEDESTRIAN PUSHBUTTON	EXISTING CABINET IDENTIFIER (TYPE OF CABINET)
EXISTING PEDESTRIAN PUSHBUTTON	PROPOSED SPAN WIRE
PROPOSED VIDEO DETECTION	EXISTING SPAN WIRE
EXISTING VIDEO DETECTION	RIGHT-OF-WAY OR PROPERTY LINE
PROPOSED MICROWAVE DETECTION	PROPOSED SPAN INSULATOR
EXISTING MICROWAVE DETECTION	EXISTING SPAN INSULATOR
OVERHEAD SIGNING	SERVICE PEDESTAL
PROPOSED OPTICOM RECEIVER	
EXISTING OPTICOM RECEIVER	
PROPOSED MAST ARM	
EXISTING MAST ARM	
PROPOSED LUMINAIRE	
EXISTING LUMINAIRE	
PROPOSED LOOP DETECTOR (TYPE 1 OR 2)	
EXISTING LOOP DETECTOR (TYPE 1 OR 2)	

GENERAL SIGNAL NOTES

1. ALL SIGNAL POLES WILL BE 32 FEET, EXCEPT WHERE SHOWN.
2. ALL GALVANIZED CONDUIT (GRC) SHALL BE REAMED AND THREADED. ALL GRC SHALL BE THREADED TOGETHER WITH APPROVED COUPLINGS. SET SCREW, BOLTED, AND COMPRESSION FITTING ARE NOT ACCEPTABLE.
3. ALL UNDERGROUND AND OVERHEAD UTILITIES SHOWN ON THESE PLANS ARE SCHEMATIC ONLY AND MAY NOT BE COMPLETE. THE CONTRACTOR SHALL BE RESPONSIBLE FOR NOTIFYING MISS UTILITY, AND/OR THE APPROPRIATE UTILITY PRIOR TO THE BEGINNING OF CONSTRUCTION FOR THE UTILITY MARKOUTS. IF THE CONTRACTOR PERCEIVES THAT A CONFLICT BETWEEN UTILITIES AND THE TRAFFIC SIGNAL WILL OCCUR, THE CONTRACTOR SHALL NOTIFY DELDOT TRAFFIC IMMEDIATELY BEFORE CONSTRUCTION.

RECOMMENDED [signature] DATE: 8.24.10 | RECOMMENDED ______ DATE: ______ | RECOMMENDED ______ DATE: ______ | APPROVED TRAFFIC ENGINEER [signature] DATE: 8/24/10 | APPROVED FOR INSTALLATION CHIEF TRAFFIC ENGINEER [signature] DATE: 8/24/10

DELAWARE DEPARTMENT OF TRANSPORTATION

ADDENDUM / REVISIONS

SCALE 0 30 60 90 FEET

SR1 / I-95 INTERCHANGE - CHRISTIANA MALL ROAD BRIDGE

CONTRACT	T201009004
COUNTY	NEW CASTLE
PERMIT NO.	N–
DESIGNED BY: RKK	
CHECKED BY: JCR	

SIGNAL PLAN

RAMP G1 @ RAMP R1

SHEET NO.	147
TOTAL SHTS.	164

8/20/2010 11:06:32 AM
M:\PROJECTS\2003\03059_DELTRNPK\SR1MALL\CADD\3009004\PLANS\CP99_SG_RAMPR1.DGN

NOTES:

4. PROPOSED SIGNAL HEADS TO REMAIN BAGGED UNTIL ROADWAY TIE IN AND REQUIRED PHASING HAS BEEN IMPLEMENTED AND THE REMOVAL OF THE EXISTING TEMPORARY SIGNAL LOCATED AT THE EXISTING MALL RING ROAD BRIDGE OR AS NEEDED TO MEET REQUIRED APPROVED CONSTRUCTION PHASING.THE CONTRACTOR SHALL CONTACT DELDOT'S SIGNAL CONSTRUCTION MANAGER AT (302)222-5920 A MINIMUM OF TEN (10) DAYS PRIOR TO ANY REQUIRED WORK.
5. ALL CABLE, SIGNAL HEADS AND CABINET INSTALLATION TO BE COMPLETED BY DELDOT TRAFFIC FORCES. THE CONTRACTOR SHALL CONTACT DELDOT'S SIGNAL CONSTRUCTION MANAGER AT (302)222-5920 A MINIMUM OF TEN (10) DAYS PRIOR TO ANY REQUIRED WORK.
6. PROPOSED ITMS COMMS SHOWN FOR REFERENCE PURPOSE ONLY-SEE SIGNING, STRIPING AND CONDUIT PLANS FOR COMMUNICATION ROUTING.
7 PROPOSED MARKINGS SHOWN FOR REFERENCE PURPOSE ONLY-SEE SIGNING, STRIPING AND CONDUIT PLANS FOR LOCATION AND QUANTITIES.
8. FOR EXISTING AND PROPOSED SIGNING SEE SIGNING, STRIPING AND CONDUIT PLANS.
9. DELDOT SIGN SHOP TO FURNISH OVERHEAD SIGNS TO DELDOT SIGNAL FORCES FOR INSTALLATION.
10. PROPOSED POWER FEED FROM POLE LINE LOCATED ALONG STANTON CHRISTIANA ROAD.

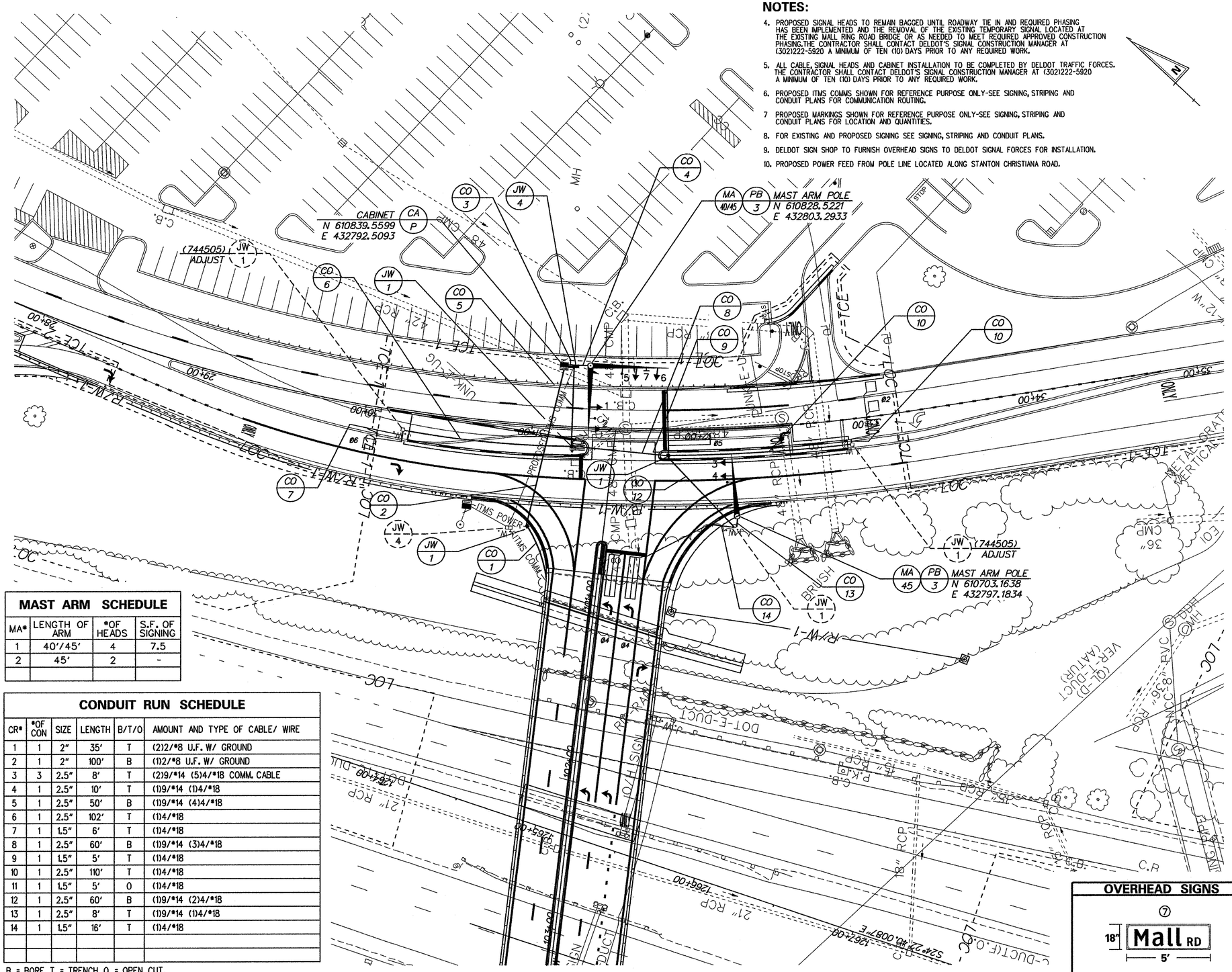

MAST ARM SCHEDULE

MA*	LENGTH OF ARM	#OF HEADS	S.F. OF SIGNING
1	40'/45'	4	7.5
2	45'	2	-

CONDUIT RUN SCHEDULE

CR*	#OF CON	SIZE	LENGTH	B/T/O	AMOUNT AND TYPE OF CABLE/ WIRE
1	1	2"	35'	T	(2)2/#8 U.F. W/ GROUND
2	1	2"	100'	B	(1)2/#8 U.F. W/ GROUND
3	3	2.5"	8'	T	(2)9/#14 (5)4/#18 COMM. CABLE
4	1	2.5"	10'	T	(1)9/#14 (1)4/#18
5	1	2.5"	50'	B	(1)9/#14 (4)4/#18
6	1	2.5"	102'	T	(1)4/#18
7	1	1.5"	6'	T	(1)4/#18
8	1	2.5"	60'	B	(1)9/#14 (3)4/#18
9	1	1.5"	5'	T	(1)4/#18
10	1	2.5"	110'	T	(1)4/#18
11	1	1.5"	5'	O	(1)4/#18
12	1	2.5"	60'	B	(1)9/#14 (2)4/#18
13	1	2.5"	8'	T	(1)9/#14 (1)4/#18
14	1	1.5"	16'	T	(1)4/#18

B = BORE, T = TRENCH, O = OPEN CUT.

OVERHEAD SIGNS

⑦

18" Mall RD 5'

SIGNAL PHASING

NEMA PHASING

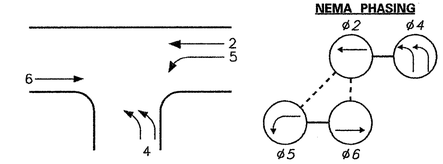

PHASING NOTES

1. PHASES ASSOCIATED BY A SOLID LINE WILL NOT OPERATE CONCURRENTLY.
2. PHASES ASSOCIATED BY A DASHED LINE WILL OPERATE CONCURRENTLY.

SIGNAL HEAD DIAGRAM

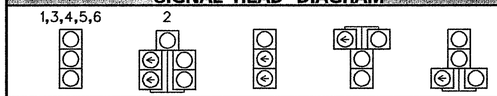

LEGEND

PROPOSED SIGNAL CABINET	REMOVE BY CONTRACTOR
EXISTING SIGNAL CABINET	REMOVE BY OTHERS
PROPOSED SIGNAL POLE BASE	ABANDON
EXISTING SIGNAL POLE BASE	PROPOSED POLE BASE IDENTIFIER (TYPE OF POLE BASE)
PROPOSED PEDESTRIAN POLE BASE	EXISTING POLE BASE IDENTIFIER (TYPE OF POLE BASE)
EXISTING PEDESTRIAN POLE BASE	PROPOSED JUNCTION WELL IDENTIFIER (TYPE OF JUNCTION WELL)
PROPOSED WOOD POLE	EXISTING JUNCTION WELL IDENTIFIER (TYPE OF JUNCTION WELL)
EXISTING UTILITY POLE	PROPOSED CONDUIT RUN IDENTIFIER (# OF CONDUIT RUN)
PROPOSED JUNCTION WELL	EXISTING CONDUIT RUN IDENTIFIER (# OF CONDUIT RUN)
EXISTING JUNCTION WELL	PROPOSED OVERHEAD RUN IDENTIFIER (# OF OVERHEAD RUN)
PROPOSED SIGNAL HEAD	EXISTING OVERHEAD RUN IDENTIFIER (# OF OVERHEAD RUN)
EXISTING SIGNAL HEAD	PROPOSED MAST ARM IDENTIFIER (LENGTH OF ARM)
PROPOSED PEDESTRIAN SIGNAL HEAD	EXISTING MAST ARM IDENTIFIER (LENGTH OF ARM)
EXISTING PEDESTRIAN SIGNAL HEAD	PROPOSED CABINET IDENTIFIER (TYPE OF CABINET)
PROPOSED PEDESTRIAN PUSHBUTTON	EXISTING CABINET IDENTIFIER (TYPE OF CABINET)
EXISTING PEDESTRIAN PUSHBUTTON	PROPOSED SPAN WIRE
PROPOSED VIDEO DETECTION	EXISTING SPAN WIRE
EXISTING VIDEO DETECTION	RIGHT-OF-WAY OR PROPERTY LINE
PROPOSED MICROWAVE DETECTION	PROPOSED SPAN INSULATOR
EXISTING MICROWAVE DETECTION	EXISTING SPAN INSULATOR
OVERHEAD SIGNING	SERVICE PEDESTAL
PROPOSED OPTICOM RECEIVER	
EXISTING OPTICOM RECEIVER	
PROPOSED MAST ARM	
EXISTING MAST ARM	
PROPOSED LUMINAIRE	
EXISTING LUMINAIRE	
PROPOSED LOOP DETECTOR (TYPE 1 OR 2)	
EXISTING LOOP DETECTOR (TYPE 1 OR 2)	

GENERAL SIGNAL NOTES

1. ALL SIGNAL POLES WILL BE STANDARD DELAWARE MAST ARM ASSEMBLIES, EXCEPT WHERE SHOWN.
2. ALL GALVANIZED CONDUIT (GRC) SHALL BE REAMED AND THREADED. ALL GRC SHALL BE THREADED TOGETHER WITH APPROVED COUPLINGS.SET SCREW, BOLTED, AND COMPRESSION FITTING ARE NOT ACCEPTABLE.
3. ALL UNDERGROUND AND OVERHEAD UTILITIES SHOWN ON THESE PLANS ARE SCHEMATIC ONLY AND MAY NOT BE COMPLETE. THE CONTRACTOR SHALL BE RESPONSIBLE FOR NOTIFYING MISS UTILITY, AND/OR THE APPROPRIATE UTILITY PRIOR TO THE BEGINNING OF CONSTRUCTION FOR THE UTILITY MARKOUTS. IF THE CONTRACTOR PERCEIVES THAT A CONFLICT BETWEEN UTILITIES AND THE TRAFFIC SIGNAL WILL OCCUR, THE CONTRACTOR SHALL NOTIFY DELDOT TRAFFIC IMMEDIATELY BEFORE CONSTRUCTION.

RECOMMENDED _____ DATE: 8.24.10 | RECOMMENDED _____ DATE: _____ | RECOMMENDED _____ DATE: _____ | APPROVED TRAFFIC ENGINEER _____ DATE: 8/24/10 | APPROVED FOR INSTALLATION CHIEF TRAFFIC ENGINEER _____ DATE: 8/24/10

DELAWARE DEPARTMENT OF TRANSPORTATION

ADDENDUM / REVISIONS

SCALE 0 30 60 90 FEET

SR1 /I-95 INTERCHANGE - CHRISTIANA MALL ROAD BRIDGE

CONTRACT	PERMIT NO.	N-733
T201009004	DESIGNED BY: RKK	
COUNTY		
NEW CASTLE	CHECKED BY: JCR	

SIGNAL PLAN

Ramp R1 @ Mall Rd

SHEET NO. 148 | TOTAL SHTS. 164

8/20/2010 11:32:45 AM
M:\PROJECTS\2003\03059_DELTRNPK\SR1MALL\CADD\3009004\PLANS\CP100_SG_RAMPR1.DGN

NOTES:

8. DELDOT TRAFFIC FORCES TO INSTALL EMERGENCY PREEMPTION RECEIVERS AND CABLE TO EXISTING SPAN.
9. CONTRACTOR SHALL INSTALL PROPOSED TYPE 4 POLE BASES AND CONDUIT CONNECTIONS INTO EXISTING TYPE 1 WELL AS NEEDED OR DIRECTED BY THE ENGINEER. DELDOT TRAFFIC FORCES SHALL INSTALL PEDESTRIAN SIGNAL POLE, COUNTDOWN DISPLAY HEADS, PUSHBUTTONS, SIGNS AND CABLE.
10. PROPOSED ITMS COMMS SHOWN FOR REFERENCE PURPOSE ONLY-SEE SIGNING, STRIPING AND CONDUIT PLANS FOR COMMUNICATION ROUTING.
11. PROPOSED MARKINGS SHOWN FOR REFERENCE PURPOSE ONLY-SEE SIGNING, STRIPING AND CONDUIT PLANS FOR LOCATION AND QUANTITIES.
12. FOR EXISTING AND PROPOSED SIGNING SEE SIGNING, STRIPING AND CONDUIT PLANS.
13. DELDOT TMC TO MODIFY EXISTING SIGNAL PHASING TO ACCOMMODATE NEW SIGNAL OPERATION.
14. ALL CABLE REMOVAL AND INSTALLATION TO BE COMPLETED BY DELDOT TRAFFIC FORCES. THE CONTRACTOR SHALL CONTACT DELDOT'S SIGNAL CONSTRUCTION MANAGER AT (302)222-5920 A MINIMUM OF TEN (10) DAYS PRIOR TO ANY REQUIRED WORK.

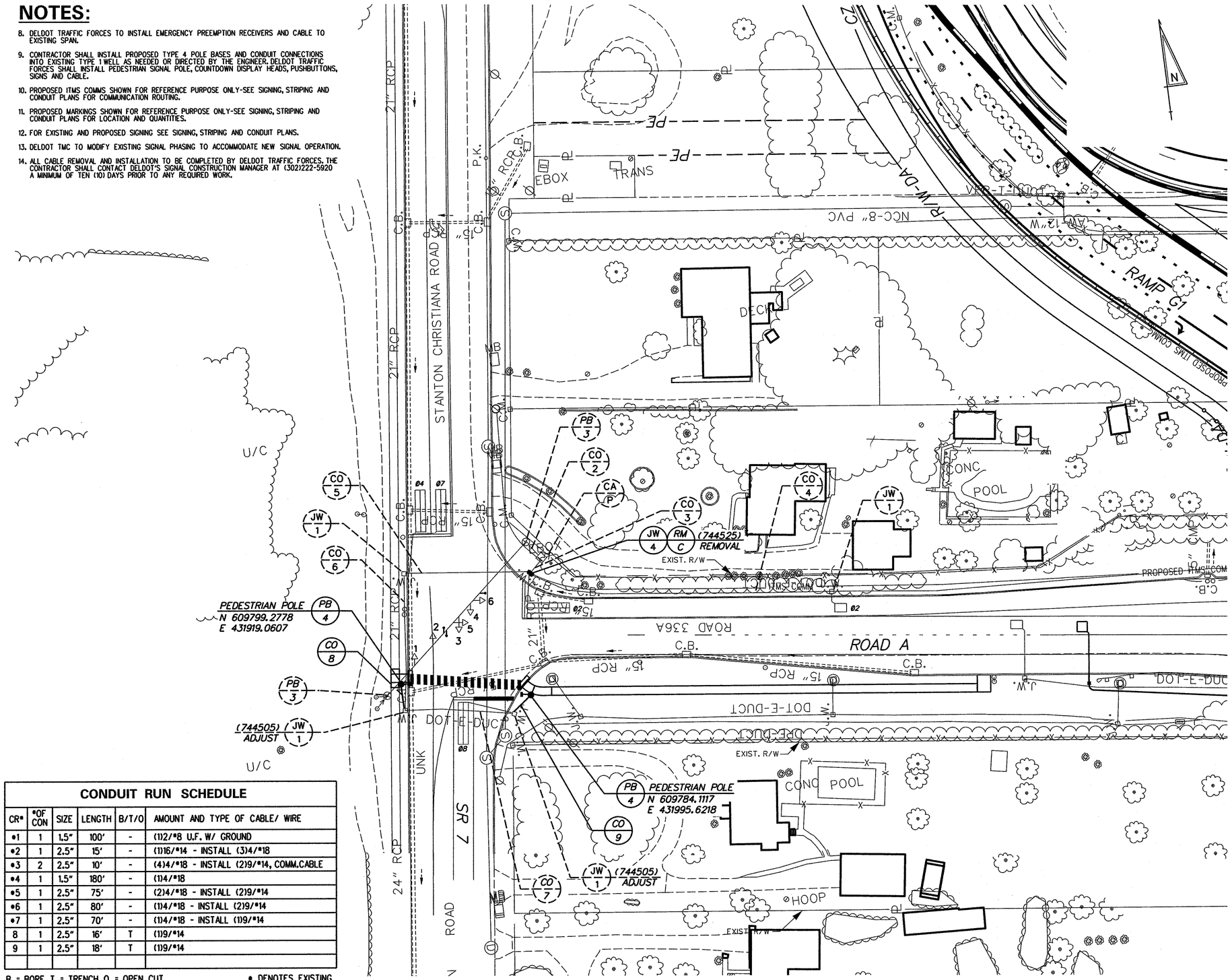

CONDUIT RUN SCHEDULE

CR#	#OF CON	SIZE	LENGTH	B/T/O	AMOUNT AND TYPE OF CABLE/ WIRE
•1	1	1.5"	100'	-	(1)2/#8 U.F. W/ GROUND
•2	1	2.5"	15'	-	(1)16/#14 - INSTALL (3)4/#18
•3	2	2.5"	10'	-	(4)4/#18 - INSTALL (2)9/#14, COMM.CABLE
•4	1	1.5"	180'	-	(1)4/#18
•5	1	2.5"	75'	-	(2)4/#18 - INSTALL (2)9/#14
•6	1	2.5"	80'	-	(1)4/#18 - INSTALL (2)9/#14
•7	1	2.5"	70'	-	(1)4/#18 - INSTALL (1)9/#14
8	1	2.5"	16'	T	(1)9/#14
9	1	2.5"	18'	T	(1)9/#14

B = BORE, T = TRENCH, O = OPEN CUT. • DENOTES EXISTING

SIGNAL PHASING

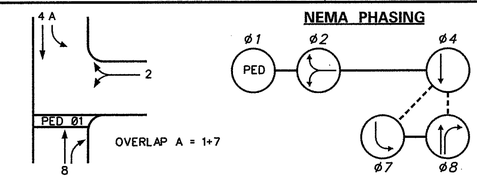

PHASING NOTES

1. PHASES ASSOCIATED BY A SOLID LINE WILL NOT OPERATE CONCURRENTLY.
2. PHASES ASSOCIATED BY A DASHED LINE WILL OPERATE CONCURRENTLY.

SIGNAL HEAD DIAGRAM

LEGEND

	PROPOSED SIGNAL CABINET	RM/C	REMOVE BY CONTRACTOR
	EXISTING SIGNAL CABINET	RM/O	REMOVE BY OTHERS
	PROPOSED SIGNAL POLE BASE	AB	ABANDON
	EXISTING SIGNAL POLE BASE	PB/X	PROPOSED POLE BASE IDENTIFIER (TYPE OF POLE BASE)
	PROPOSED PEDESTRIAN POLE BASE	PB/X	EXISTING POLE BASE IDENTIFIER (TYPE OF POLE BASE)
	EXISTING PEDESTRIAN POLE BASE	JW/X	PROPOSED JUNCTION WELL IDENTIFIER (TYPE OF JUNCTION WELL)
	PROPOSED WOOD POLE	JW/X	EXISTING JUNCTION WELL IDENTIFIER (TYPE OF JUNCTION WELL)
	EXISTING UTILITY POLE	CO/#	PROPOSED CONDUIT RUN IDENTIFIER (# OF CONDUIT RUN)
	PROPOSED JUNCTION WELL	CO/#	EXISTING CONDUIT RUN IDENTIFIER (# OF CONDUIT RUN)
J.W.	EXISTING JUNCTION WELL	OH/#	PROPOSED OVERHEAD RUN IDENTIFIER (# OF OVERHEAD RUN)
	PROPOSED SIGNAL HEAD	OH/#	EXISTING OVERHEAD RUN IDENTIFIER (# OF OVERHEAD RUN)
	EXISTING SIGNAL HEAD	MA/XX	PROPOSED MAST ARM IDENTIFIER (LENGTH OF ARM)
	PROPOSED PEDESTRIAN SIGNAL HEAD	MA/XX	EXISTING MAST ARM IDENTIFIER (LENGTH OF ARM)
	EXISTING PEDESTRIAN SIGNAL HEAD	CA/X	PROPOSED CABINET IDENTIFIER (TYPE OF CABINET)
	PROPOSED PEDESTRIAN PUSHBUTTON	CA/X	EXISTING CABINET IDENTIFIER (TYPE OF CABINET)
	EXISTING PEDESTRIAN PUSHBUTTON		PROPOSED SPAN WIRE
	PROPOSED VIDEO DETECTION	XX	EXISTING SPAN WIRE
	EXISTING VIDEO DETECTION		RIGHT-OF-WAY OR PROPERTY LINE
	PROPOSED MICROWAVE DETECTION		PROPOSED SPAN INSULATOR
	EXISTING MICROWAVE DETECTION		EXISTING SPAN INSULATOR
	OVERHEAD SIGNING	P	SERVICE PEDESTAL
	PROPOSED OPTICOM RECEIVER		
	EXISTING OPTICOM RECEIVER		
	PROPOSED MAST ARM		
	EXISTING MAST ARM		
	PROPOSED LUMINAIRE		
	EXISTING LUMINAIRE		
	PROPOSED LOOP DETECTOR (TYPE 1 OR 2)		
	EXISTING LOOP DETECTOR (TYPE 1 OR 2)		

GENERAL SIGNAL NOTES

1. ALL EXISTING SIGNAL POLES ARE 28 FEET
2. ALL SIGNAL EQUIPMENT REMOVED FROM A PROJECT IS TO BE RETURNED TO DELDOT TRAFFIC - DOVER, DELAWARE.
3. POLE BASES, CABINET BASE AND CONDUIT JUNCTION WELLS TO BE REMOVED IN ACCORDANCE WITH SECTION 201 AND 202 OF THE STANDARD SPECIFICATIONS OR AS DIRECTED BY ENGINEER. EXISTING CONDUIT IS TO BE ABANDONED.
4. ALL GALVANIZED CONDUIT (GRC) SHALL BE REAMED AND THREADED. ALL GRC SHALL BE THREADED TOGETHER WITH APPROVED COUPLINGS.SET SCREW, BOLTED, AND COMPRESSION FITTING ARE NOT ACCEPTABLE.
5. ALL UNDERGROUND AND OVERHEAD UTILITIES SHOWN ON THESE PLANS ARE SCHEMATIC ONLY AND MAY NOT BE COMPLETE. THE CONTRACTOR SHALL BE RESPONSIBLE FOR NOTIFYING MISS UTILITY, AND/OR THE APPROPRIATE UTILITY PRIOR TO THE BEGINNING OF CONSTRUCTION FOR THE UTILITY MARKOUTS. IF THE CONTRACTOR PERCEIVES THAT A CONFLICT BETWEEN UTILITIES AND THE TRAFFIC SIGNAL WILL OCCUR, THE CONTRACTOR SHALL NOTIFY DELDOT TRAFFIC IMMEDIATELY BEFORE CONSTRUCTION.
6. PROPOSED POLE BASES SUPPORTING POLES WITH PEDESTRIAN PUSHBUTTONS SHALL BE CONSTRUCTED IMMEDIATELY ADJACENT TO THE FLAT (50:1 OR FLATTER) LANDING AREA OF THE CURB RAMP OR SIDEWALK IN ACCORDANCE WITH CURRENT ADA BEST PRACTICES. THESE POLE BASES SHALL BE FLUSH WITH THE ADJOINING LANDING AREA. THE PEDESTRIAN PUSHBUTTON SHOULD BE INSTALLED AT A HEIGHT OF 42 TO 48 INCHES ABOVE THE LANDING AREA/SIDEWALK, AND SHALL BE LOCATED SUCH THAT THE MAXIMUM REACH DISTANCE IS 10 INCHES FROM THE LANDING AREA TO THE FACE OF THE PUSHBUTTON. PEDESTRIAN SIGNAL HEADS SHALL BE MOUNTED WITH THE BOTTOM OF THE SIGNAL HOUSING INCLUDING BRACKETS NOT LESS THAN 7 FEET OR MORE THAN 10 FEET ABOVE SIDEWALK LEVEL.
7. ALL PEDESTRIAN SIGNALS SHALL CONTAIN PEDESTRIAN COUNTDOWN DISPLAY.

RECOMMENDED _____ DATE: 10.05.10

RECOMMENDED _____ DATE: _____

RECOMMENDED _____ DATE: _____

APPROVED TRAFFIC ENGINEER _____ DATE: 10/5/10

APPROVED FOR INSTALLATION
CHIEF TRAFFIC ENGINEER _____ DATE: 10/5/10

DELAWARE DEPARTMENT OF TRANSPORTATION

ADDENDUM / REVISIONS

SCALE 0 30 60 90 FEET

SR1/I-95 INTERCHANGE - CHRISTIANA MALL ROAD BRIDGE

CONTRACT	PERMIT NO.	N533
T201009004	DESIGNED BY: RKK	
COUNTY		
NEW CASTLE	CHECKED BY: JCR	

SIGNAL PLAN
Road A & Del Rte 7

SHEET NO. 148A
TOTAL SHTS. 164

10/4/2010 4:32:33 PM
H:\DOCUMENTS\SR 1\BREAKOUT\CP101_SG_RAMPR1.DGN

DELAWARE DEPARTMENT OF TRANSPORTATION
AASHTO CLASSIFICATION OF SOILS AND SOIL-AGGREGATE MIXTURES

General Classification		Granular Materials (35% or Less Passing 0.075 mm)							Silt-Clay Materials (More than 35% Passing 0.075 mm)					Organic Soils
Group Classification	Group	A-1		A-3	A-2				A-4	A-5	A-6	A-7		A-8
	Sub-Group	A-1-a	A-1-b		A-2-4	A-2-5	A-2-6	A-2-7				A-7-5	A-7-6	
	Graphic	A	B			5		7				5		
Sieve Analysis, % Passing														
2.00 mm (No. 10)		50 Max	-	-	-	-	-	-	-	-	-	-	-	See Note 1
0.425 mm (No. 40)		30 Max	50 Max	51 Min	-	-	-	-	-	-	-	-	-	
0.075 mm (No. 200)		15 Max	25 Max	10 Max	35 Max	35 Max	35 Max	35 Max	36 Min	36 Min	36 Min	36 Min	36 Min	
Characteristics of Fraction Passing 0.425 mm (No. 40)														
Liquid Limit		-		-	40 Max	41 Min	40 Max	41 Min	40 Max	41 Min	41 Max	41 Min	41 Min	See Note 1
Plasticity Index		6 Max		NP	10 Max	10 Max	11 Min	11 Min	10 Max	10 Max	11 Min	11 Min	11 Min	
Usual Types of Significant Constituent Materials		Stone Fragments, Gravel and Sand		Fine Sand	Silty or Clayey Gravel and Sand				Silty Soils		Clayey Soils			Organic Soils

Plasticity Index of A-7-5 Subgroup Is Equal to or Less Than LL Minus 30

Plasticity Index of A-7-6 Subgroup Is Greater Than LL Minus 30

Note 1-Classification Based on Visual Inspection and not on Sieve Analysis or Atterberg Limits

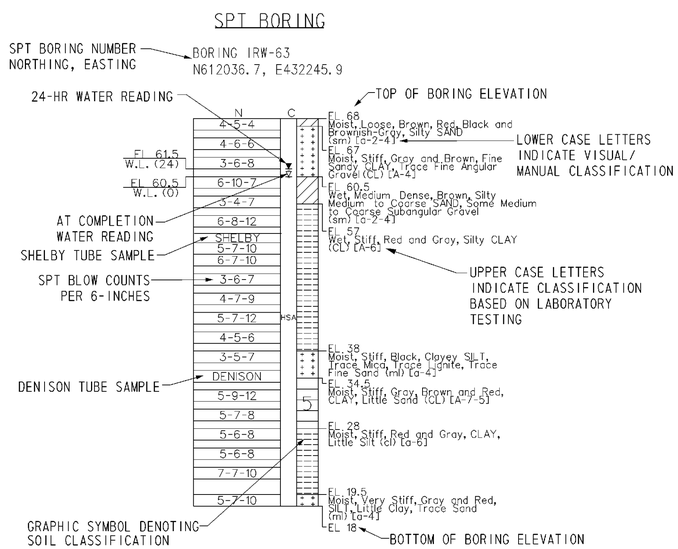

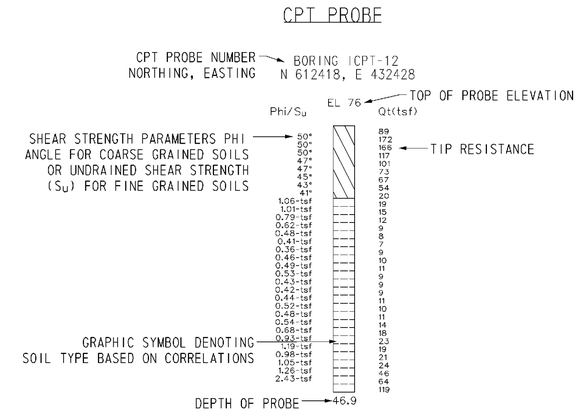

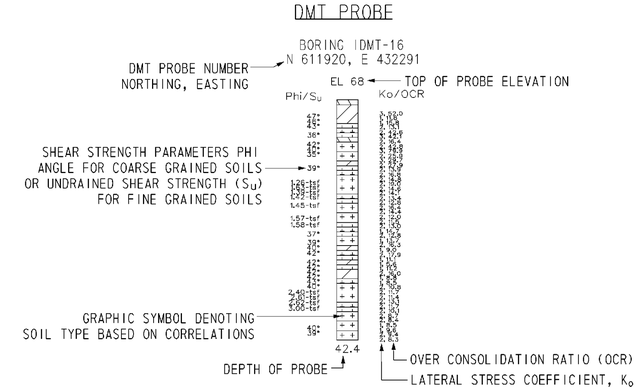

NOTES:

1. THE BORINGS AND DRIVE TEST WERE CONDUCTED IN MULTIPLE PHASES BY THE ROBERT B. BALTER COMPANY, THE WALTON CORPORATION, AND FINDLING, INC. BETWEEN AUGUST 2004 AND OCTOBER 2008.

2. THE SOIL SYMBOLS REFLECT ONLY THE MAJOR SOIL CONSTITUENT, FOR MORE COMPLETE SOIL CHARACTERISTIC REFER TO THE SOIL LOGS CONTAINED WITHIN THE FINAL FOUNDATION REPORTS DATED FEBRUARY 2009.

3. THE FIELD BORING LOGS RECORD SAMPLE SPOON RECOVERY. THE LOGS ARE AVAILABLE UPON REQUEST.

4. N = BLOWS ON A 2 INCH OD SAMPLING SPOON BY 140 LB DRIVE- WEIGHT FALLING 30 INCHES INDICATING SUCCESSIVE 6 INCH INCREMENTS OF PENETRATION IN LIEU OF BLOWS PER FOOT. PENETRATIONS GREATER THAN 6-INCHES OR LESS THAN 6-INCHES ARE INDICATED BY WOH, WOR, OR THE DEPTH OF THE PENETRATION OVER 50 (OR NUMBER OF BLOWS IF OTHER THAN 50) OVER THE NEAREST INCH.

   WOH= STATIC WEIGHT OF SAMPLING SPOON DRIVE-WEIGHT ASSEMBLY, DRIVE-WEIGHT,ANVIL (WHEN AUTOMATIC HAMMER IS USED), DRILL ROD(S), AND SAMPLING SPOONS.

   WOR= STATIC WEIGHT OF DRILL ROD AND SAMPLING SPOON

5. BORINGS AND SOIL SAMPLING WERE PERFORMED IN ACCORDANCE TO AASHTO T-206, T-225 AND T-306

6. USCS AND AASHTO DESIGNATIONS INDICATED IN UPPER CASE AND HAVE BEEN CONFIRMED USING LAB SOIL CLASSIFICATION TESTS. USCS AND AASHTO DESIGNATIONS INDICATED IN LOWER CASE ARE BASED ON VISUAL CLASSIFICATION TECHNIQUES ACCORDING TO ASTM D 2488 AND AASHTO M 145 BY RK&K GEOLOGIST OR ENGINEER.

7. CPT AND DMT WERE DRILLED BY IN-SITU SOIL TESTING, L.C AND CONETEC, INC.

   CPT = CONE PENETRATION TESTING
   DMT = FLAT- PLATE DILATOMETER

8. C= DEPTH OF HOLLOW STEM CONTINUOUS FLIGHT AUGER (HSA) WITH A 3-3/8 INCH ID, AND LIMIT OF MUD ROTARY (MD).

9. FOR LABORATORY TEST RESULTS FOR UNDISTURBED TUBE SAMPLES AND INDEX TESTING, SEE FOLLOWING SHEETS.

10. ADDITIONAL LABORATORY TEST RESULTS FOR UNDISTURBED TUBE SAMPLES ARE DETAILED ON THE BORING NOTES & LEGEND SHEET FOR EACH APPLICABLE BRIDGE STRUCTURE.

11. FOR ALL OTHER BORING & DRIVE TESTS SEE BRIDGE BORING & DRIVE TEST SHEETS.

12. FOR BORING LOCATIONS, SEE CONSTRUCTION PLAN SHEETS.

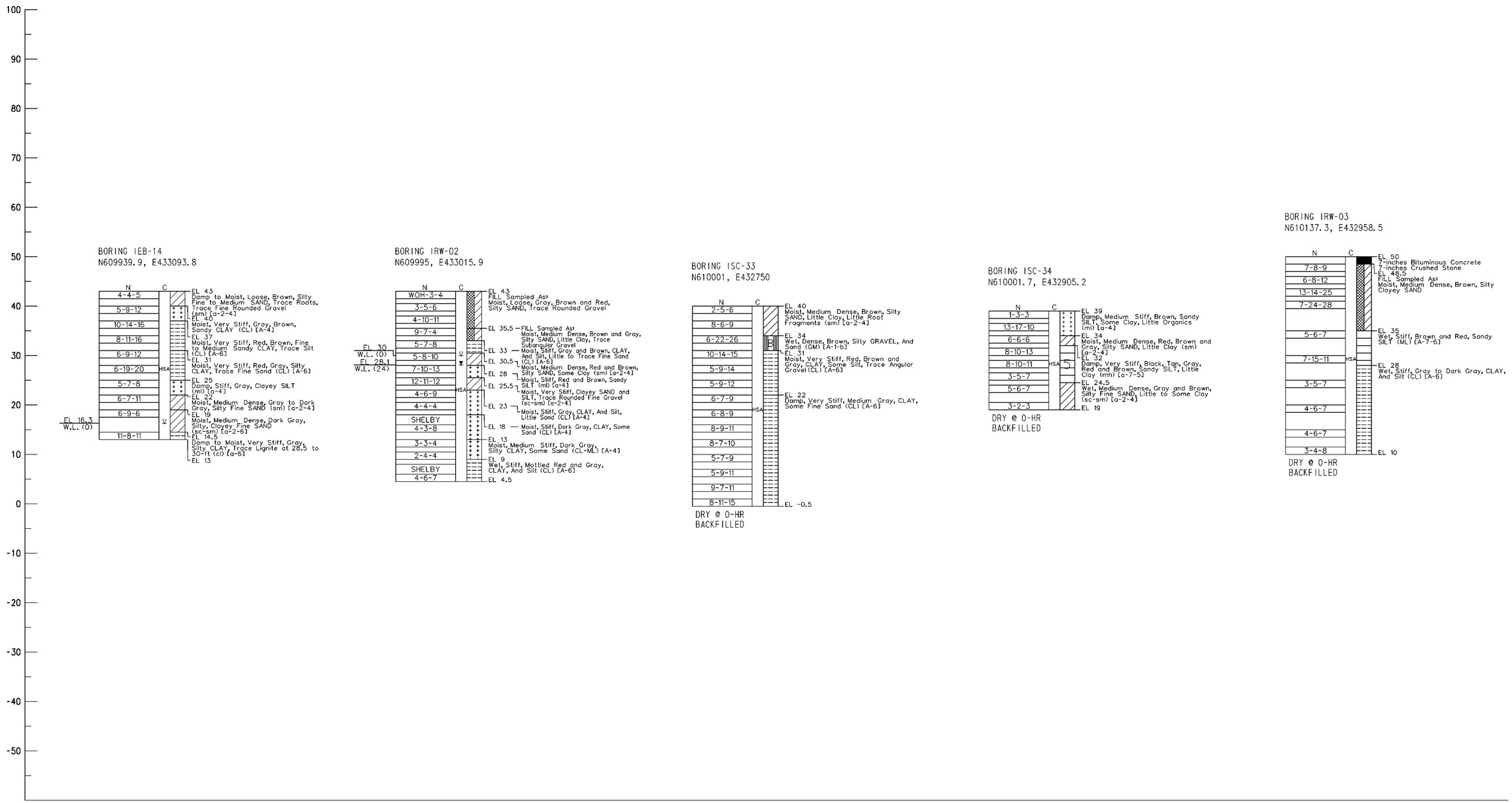

NOTES:

1. FOR BORING NOTES AND INFORMATION SEE SHEET NO. 149 OF 164.
2. FOR BORING LOCATIONS SEE CONSTRUCTION PLAN SHEETS.

8/17/2010 3:34:20 PM
M:\PROJECTS\2003\03059_DELTRNPK\SRIMALL\CADD\3009004\PLANS\B0075_RAMPR1.DGN

DELAWARE DEPARTMENT OF TRANSPORTATION	ADDENDUMS / REVISIONS	SCALE 0 10 20 30 FEET	SR1/I-95 INTERCHANGE - CHRISTIANA MALL ROAD BRIDGE	CONTRACT T201009004	BRIDGE NO. 1-223	BORING & DRIVE TESTS	SHEET NO. 150
				COUNTY NEW CASTLE	DESIGNED BY: JLT		TOTAL SHTS. 164
					CHECKED BY: EMK		

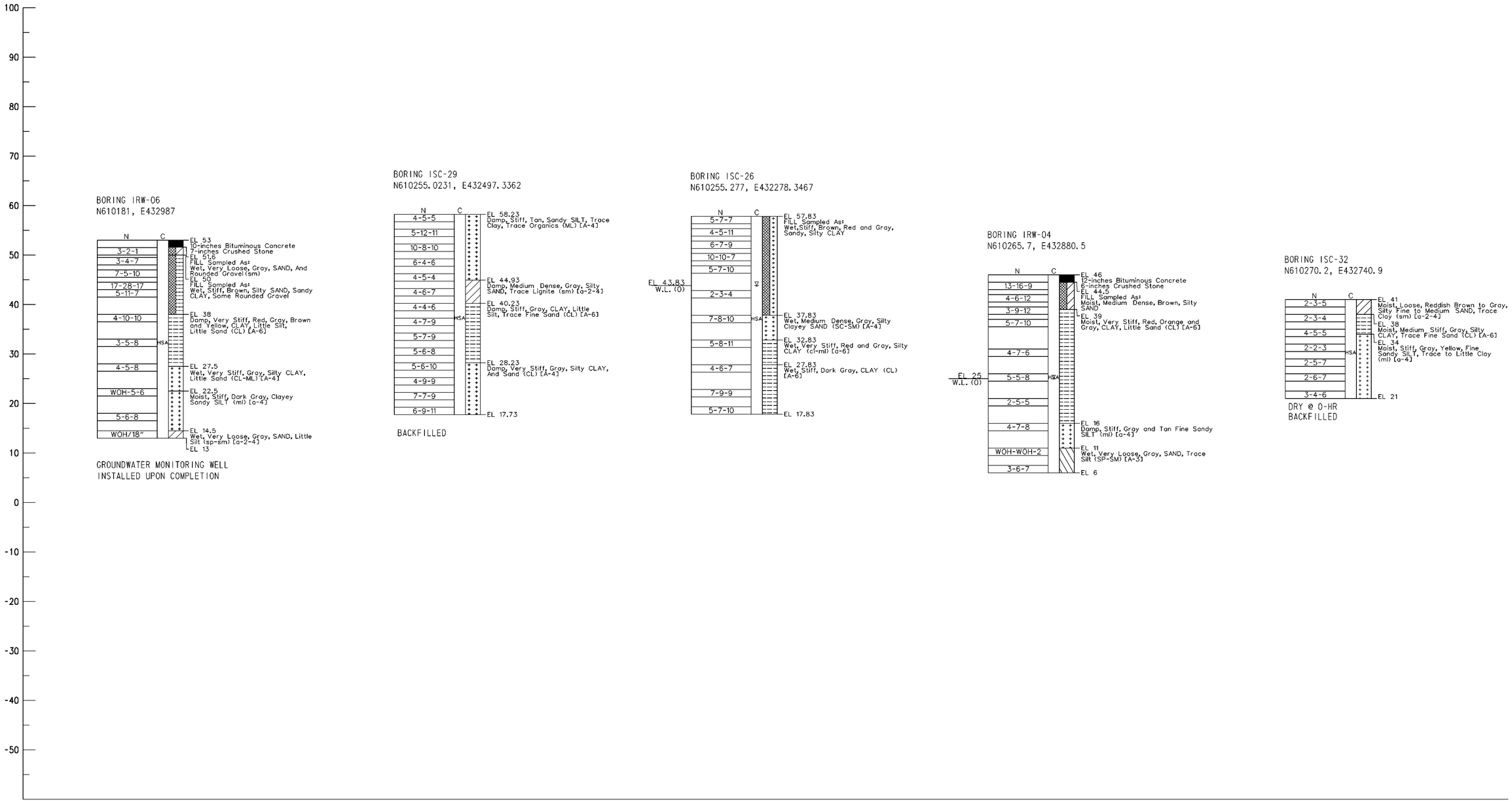

NOTES:

1. FOR BORING NOTES AND INFORMATION SEE SHEET NO. 149 OF 164.
2. FOR BORING LOCATIONS SEE CONSTRUCTION PLAN SHEETS.

8/17/2010 3:50:16 PM
M:\PROJECTS\2003\03059_DELTRNPK\SR1MALL\CADD\3009004\PLANS\B0076_RAMPR1.DGN

DELAWARE DEPARTMENT OF TRANSPORTATION	ADDENDUMS / REVISIONS	SCALE 0 10 20 30 FEET	SR1/I-95 INTERCHANGE - CHRISTIANA MALL ROAD BRIDGE	CONTRACT T201009004	BRIDGE NO. 1-223	BORING & DRIVE TESTS	SHEET NO. 151
				COUNTY NEW CASTLE	DESIGNED BY: JLT		TOTAL SHTS. 164
					CHECKED BY: EMK		

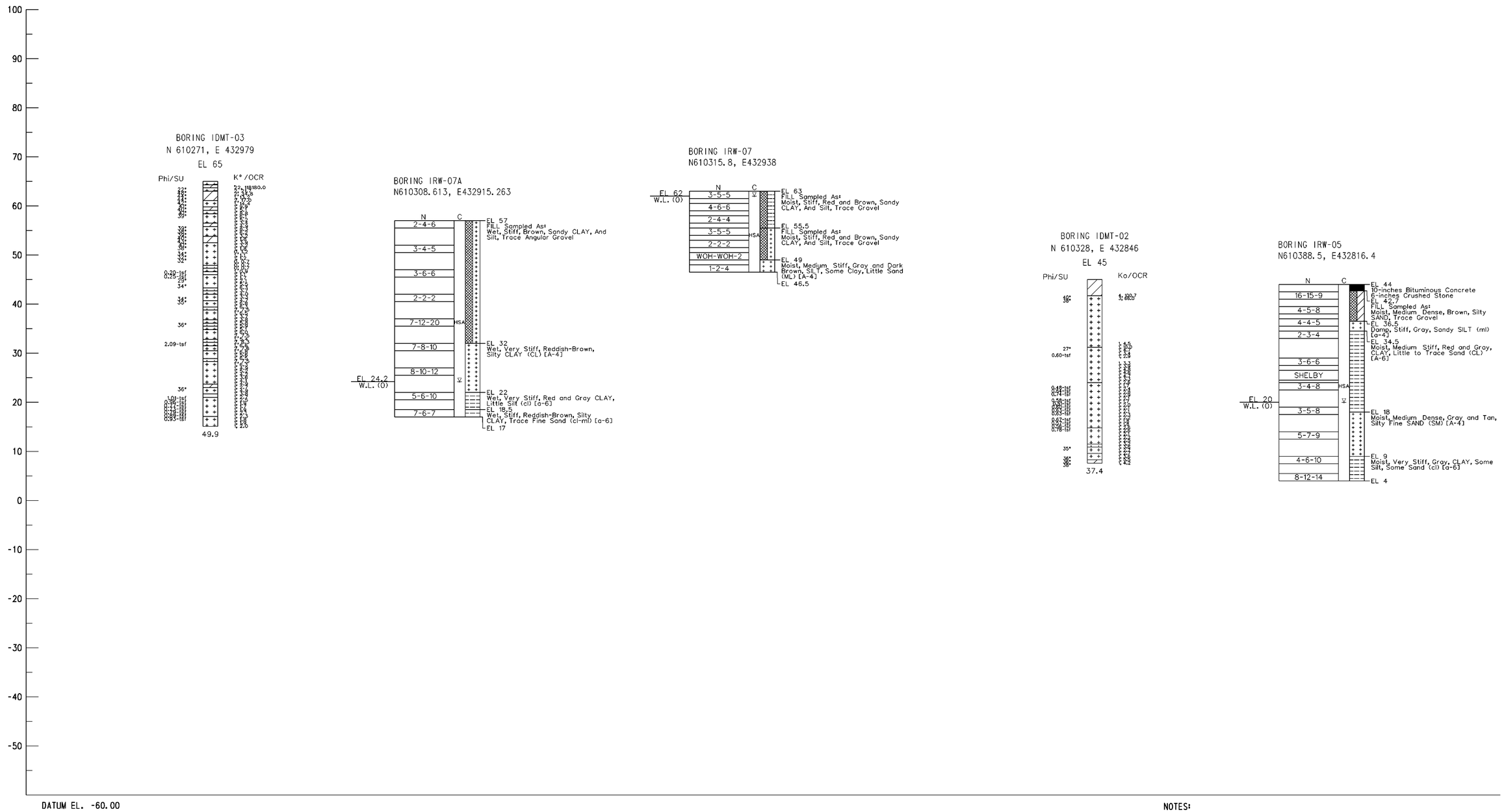

NOTES:

1. FOR BORING NOTES AND INFORMATION SEE SHEET NO. 149 OF 164.
2. FOR BORING LOCATIONS SEE CONSTRUCTION PLAN SHEETS.

8/17/2010 3:56:38 PM
M:\PROJECTS\2003\03059_DELTRNPK\SR1MALL\CADD\3009004\PLANS\B0077_RAMPR1.DGN

DELAWARE DEPARTMENT OF TRANSPORTATION	ADDENDUMS / REVISIONS	SCALE 0 10 20 30 FEET	**SR1 /I-95 INTERCHANGE - CHRISTIANA MALL ROAD BRIDGE**	CONTRACT T201009004	BRIDGE NO. 1-223	**BORING & DRIVE TESTS**	SHEET NO. 152
				COUNTY NEW CASTLE	DESIGNED BY: JLT		TOTAL SHTS. 164
					CHECKED BY: EMK		

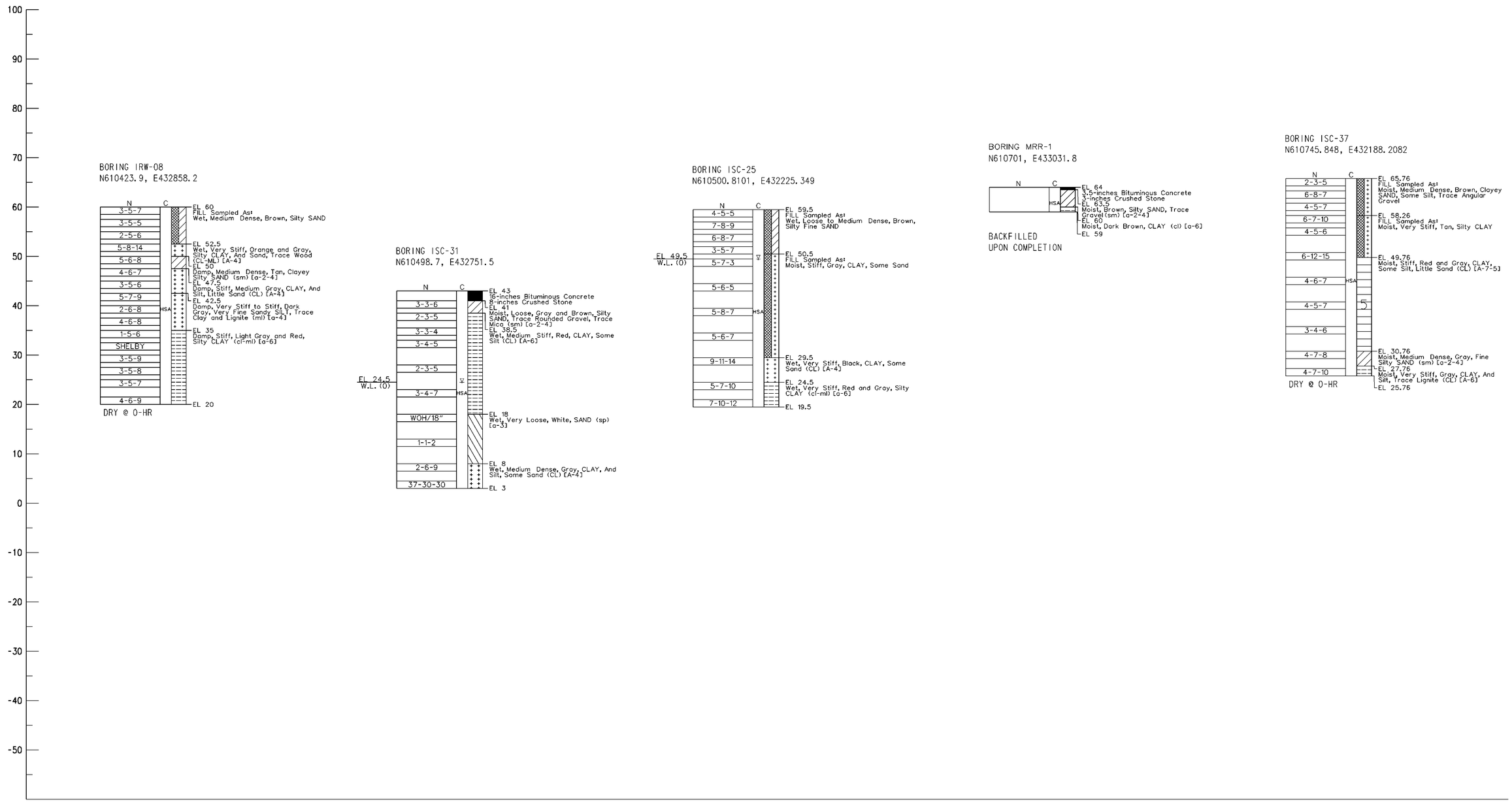

DATUM EL. -60.00

NOTES:

1. FOR BORING NOTES AND INFORMATION SEE SHEET NO. 149 OF 164.
2. FOR BORING LOCATIONS SEE CONSTRUCTION PLAN SHEETS.

8/17/2010 3:59:12 PM
M:\PROJECTS\2003\03059_DELTRNPK\SRMALL\CADD\3009004\PLANS\B0078_RAMPR1.DGN

DELAWARE DEPARTMENT OF TRANSPORTATION	ADDENDUMS / REVISIONS	SCALE 0 10 20 30 FEET	SR1/I-95 INTERCHANGE - CHRISTIANA MALL ROAD BRIDGE	CONTRACT T201009004	BRIDGE NO. 1-223	BORING & DRIVE TESTS	SHEET NO. 153
				COUNTY NEW CASTLE	DESIGNED BY: JLT		TOTAL SHTS. 164
					CHECKED BY: EMK		

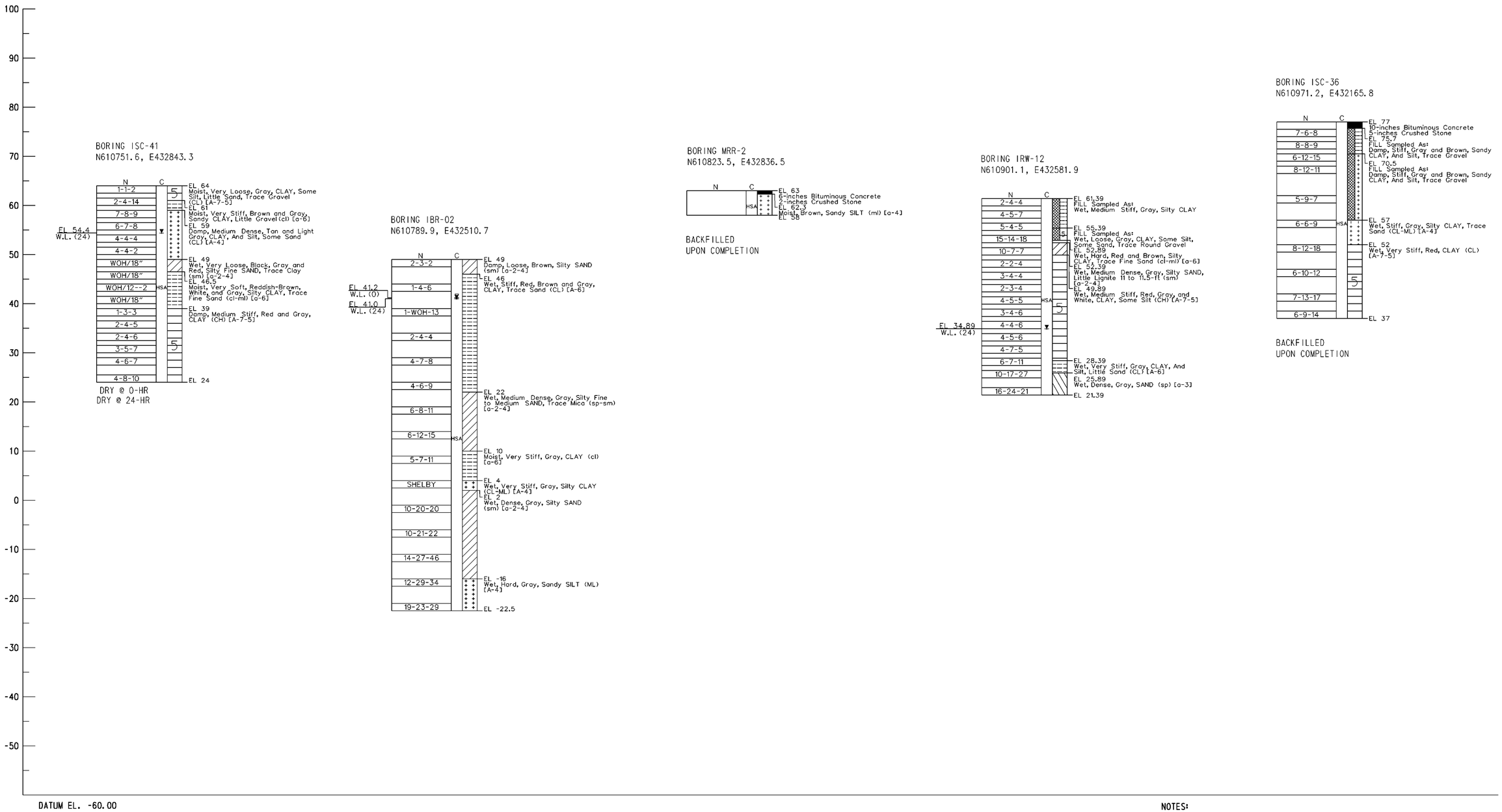

DATUM EL. -60.00

NOTES:

1. FOR BORING NOTES AND INFORMATION SEE SHEET NO. 149 OF 164.
2. FOR BORING LOCATIONS SEE CONSTRUCTION PLAN SHEETS.

8/17/2010 4:03:23 PM
M:\PROJECTS\2003\03059_DELTRNPK\SR1MALL\CADD\3009004\PLANS\B0079_RAMPR1.DGN

DELAWARE DEPARTMENT OF TRANSPORTATION	ADDENDUMS / REVISIONS	SCALE 0 10 20 30 FEET	**SR1/I-95 INTERCHANGE - CHRISTIANA MALL ROAD BRIDGE**	CONTRACT T201009004	BRIDGE NO. 1-223	**BORING & DRIVE TESTS**	SHEET NO. 154
				COUNTY NEW CASTLE	DESIGNED BY: JLT		TOTAL SHTS. 164
					CHECKED BY: EMK		

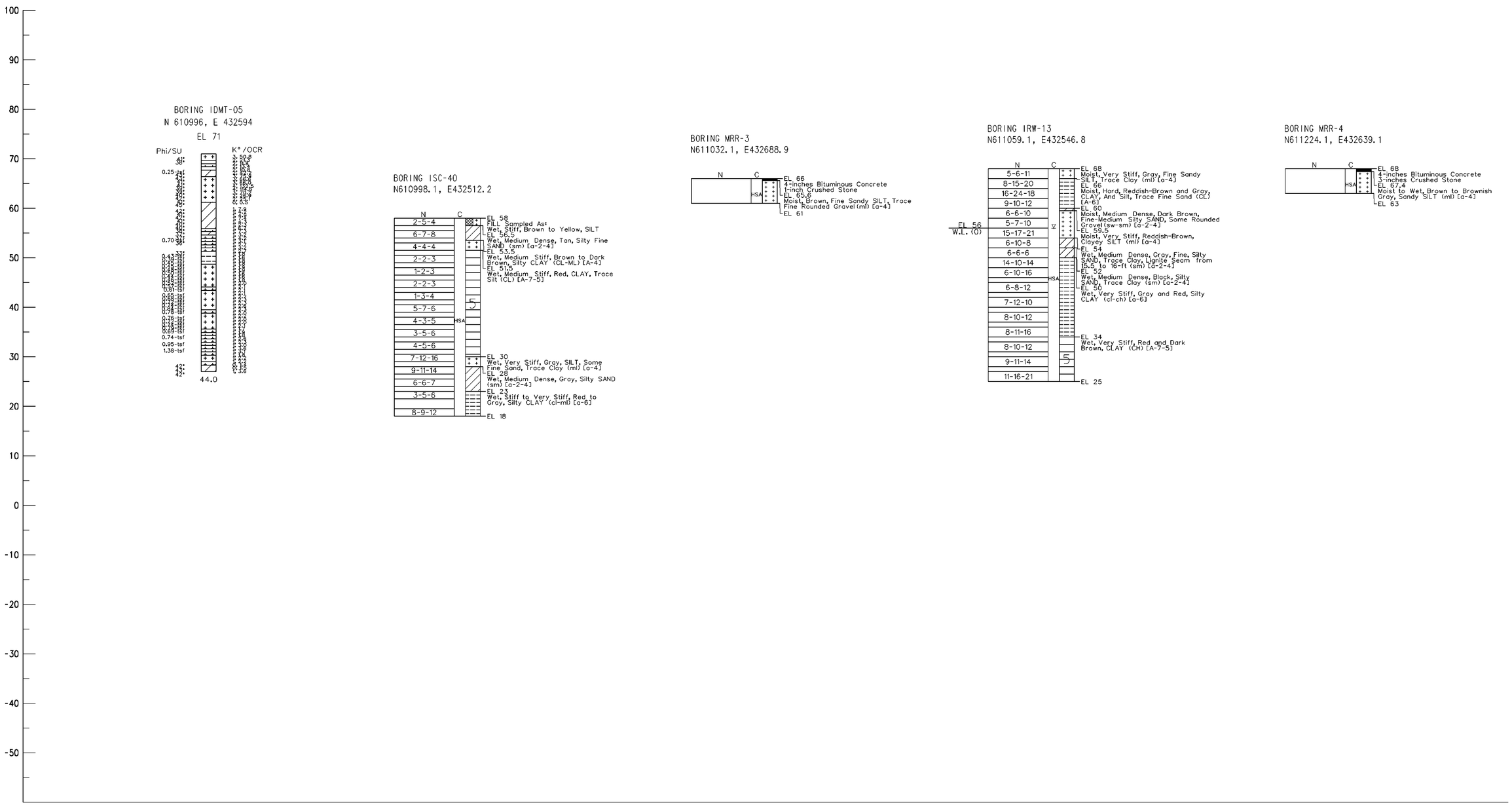

NOTES:

1. FOR BORING NOTES AND INFORMATION SEE SHEET NO. 149 OF 164.
2. FOR BORING LOCATIONS SEE CONSTRUCTION PLAN SHEETS.

8/17/2010 4:04:28 PM
M:\PROJECTS\2003\03059_DELTRNPK\SRMALL\CADD\3009004\PLANS\B0080_RAMPR1.DGN

DELAWARE DEPARTMENT OF TRANSPORTATION

ADDENDUMS / REVISIONS

SCALE 0 10 20 30 FEET

SR1/I-95 INTERCHANGE - CHRISTIANA MALL ROAD BRIDGE

CONTRACT	BRIDGE NO.	1-223
T201009004	DESIGNED BY:	JLT
COUNTY		
NEW CASTLE	CHECKED BY:	EMK

BORING & DRIVE TESTS

SHEET NO.
155
TOTAL SHTS.
164

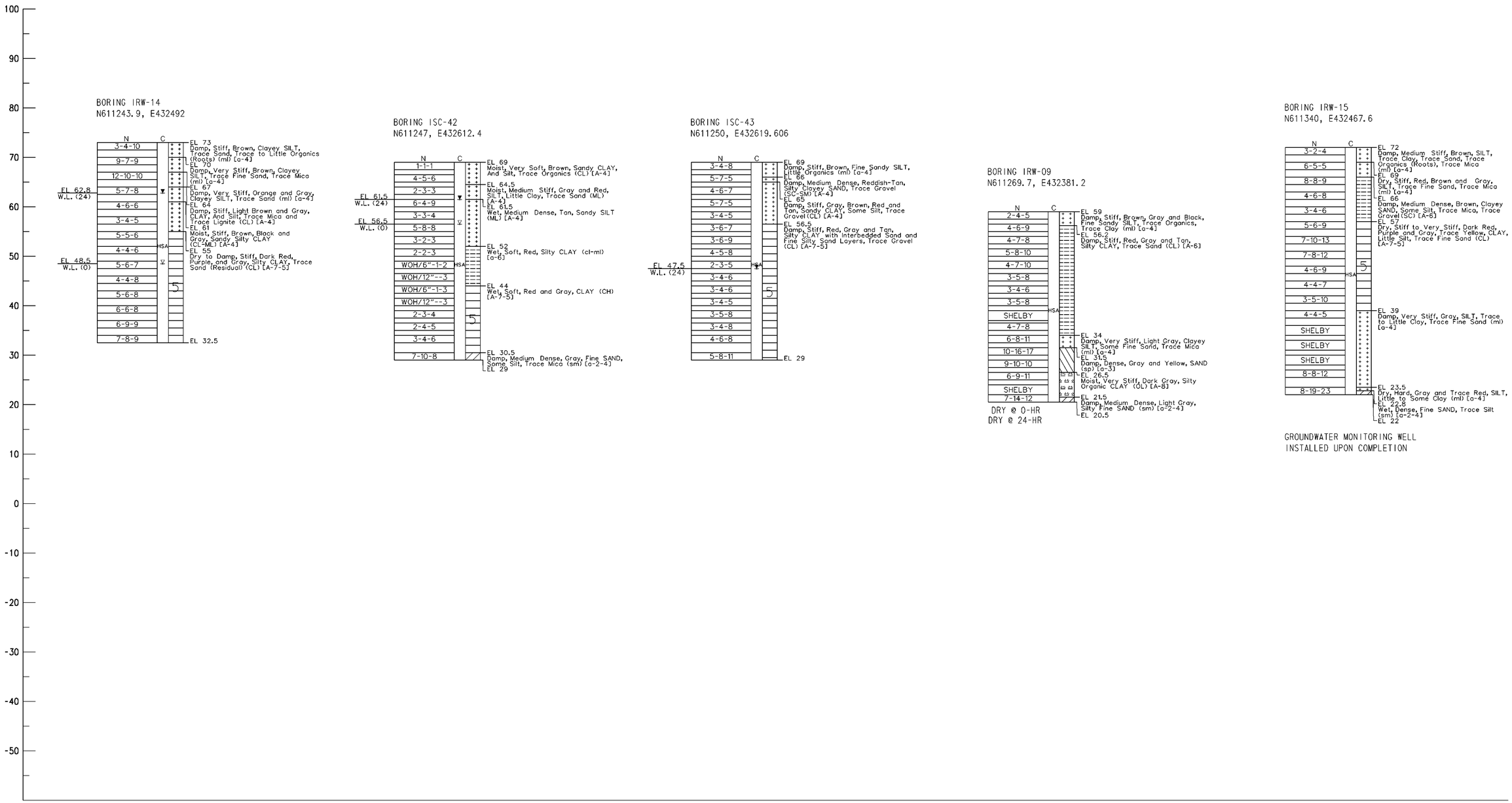

NOTES:

1. FOR BORING NOTES AND INFORMATION SEE SHEET NO. 149 OF 164.
2. FOR BORING LOCATIONS SEE CONSTRUCTION PLAN SHEETS.

8/17/2010 4:09:15 PM
M:\PROJECTS\5*59_DELTRNPK\SRIMALL\CADD\3009004\PLANS\B0081_RAMPR1.DGN

DELAWARE DEPARTMENT OF TRANSPORTATION

ADDENDUMS / REVISIONS

SCALE 0 10 20 30 FEET

SR1/I-95 INTERCHANGE - CHRISTIANA MALL ROAD BRIDGE

CONTRACT	BRIDGE NO.	1-223
T201009004	DESIGNED BY:	JLT
COUNTY		
NEW CASTLE	CHECKED BY:	EMK

BORING & DRIVE TESTS

SHEET NO.
156
TOTAL SHTS.
164

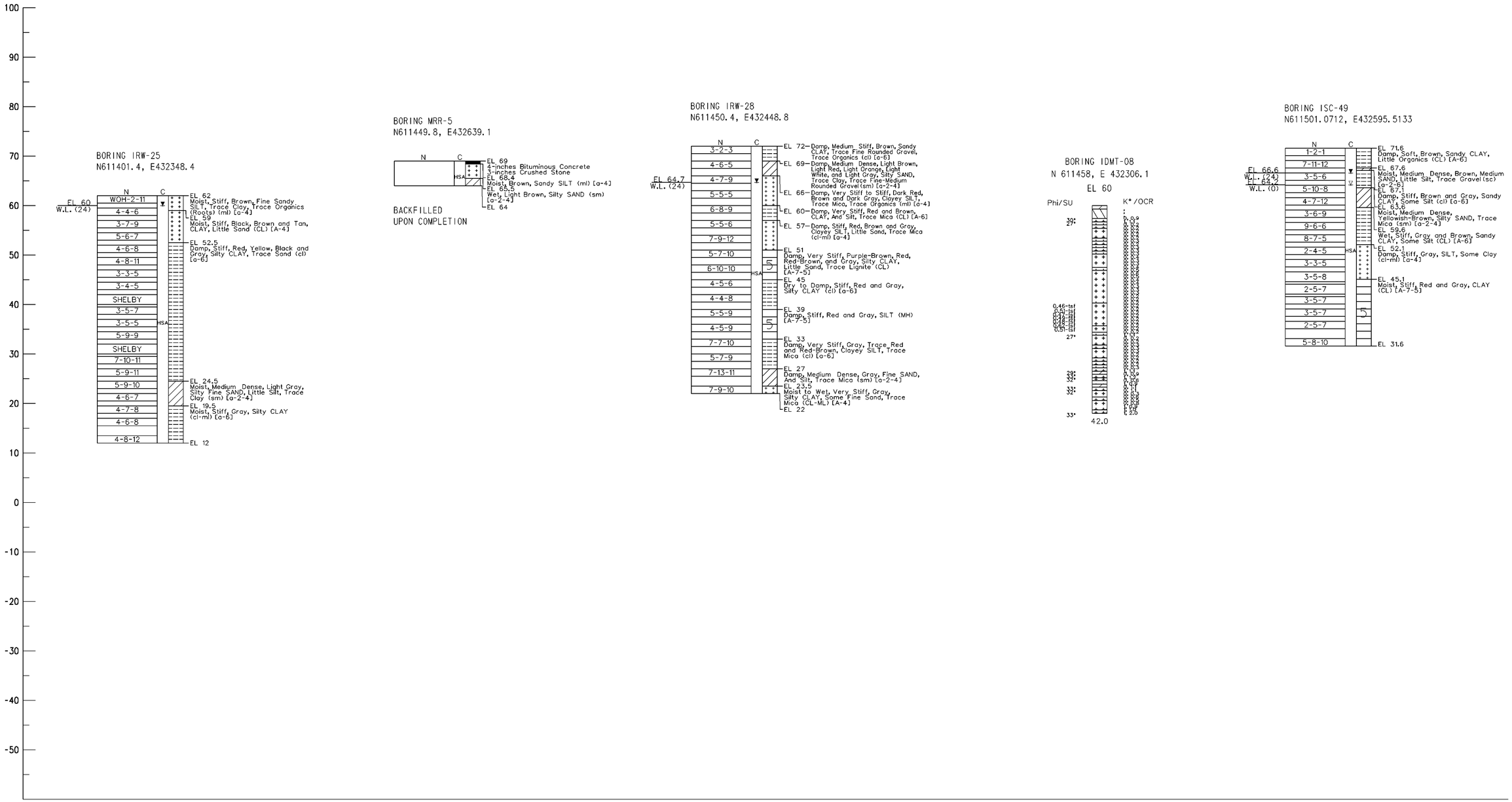

NOTES:

1. FOR BORING NOTES AND INFORMATION SEE SHEET NO. 149 OF 164.
2. FOR BORING LOCATIONS SEE CONSTRUCTION PLAN SHEETS.

8/17/2010 4:14:23 PM
M:\PROJECTS\2003\03059_DELTRNPK\SR1MALL\CADD\3009004\PLANS\B0082_RAMPR1.DGN

DELAWARE DEPARTMENT OF TRANSPORTATION	ADDENDUMS / REVISIONS	SCALE 0 10 20 30 FEET	SR1/I-95 INTERCHANGE - CHRISTIANA MALL ROAD BRIDGE	CONTRACT T201009004	BRIDGE NO. 1-223	BORING & DRIVE TESTS	SHEET NO. 157
				COUNTY NEW CASTLE	DESIGNED BY: JLT		TOTAL SHTS. 164
					CHECKED BY: EMK		

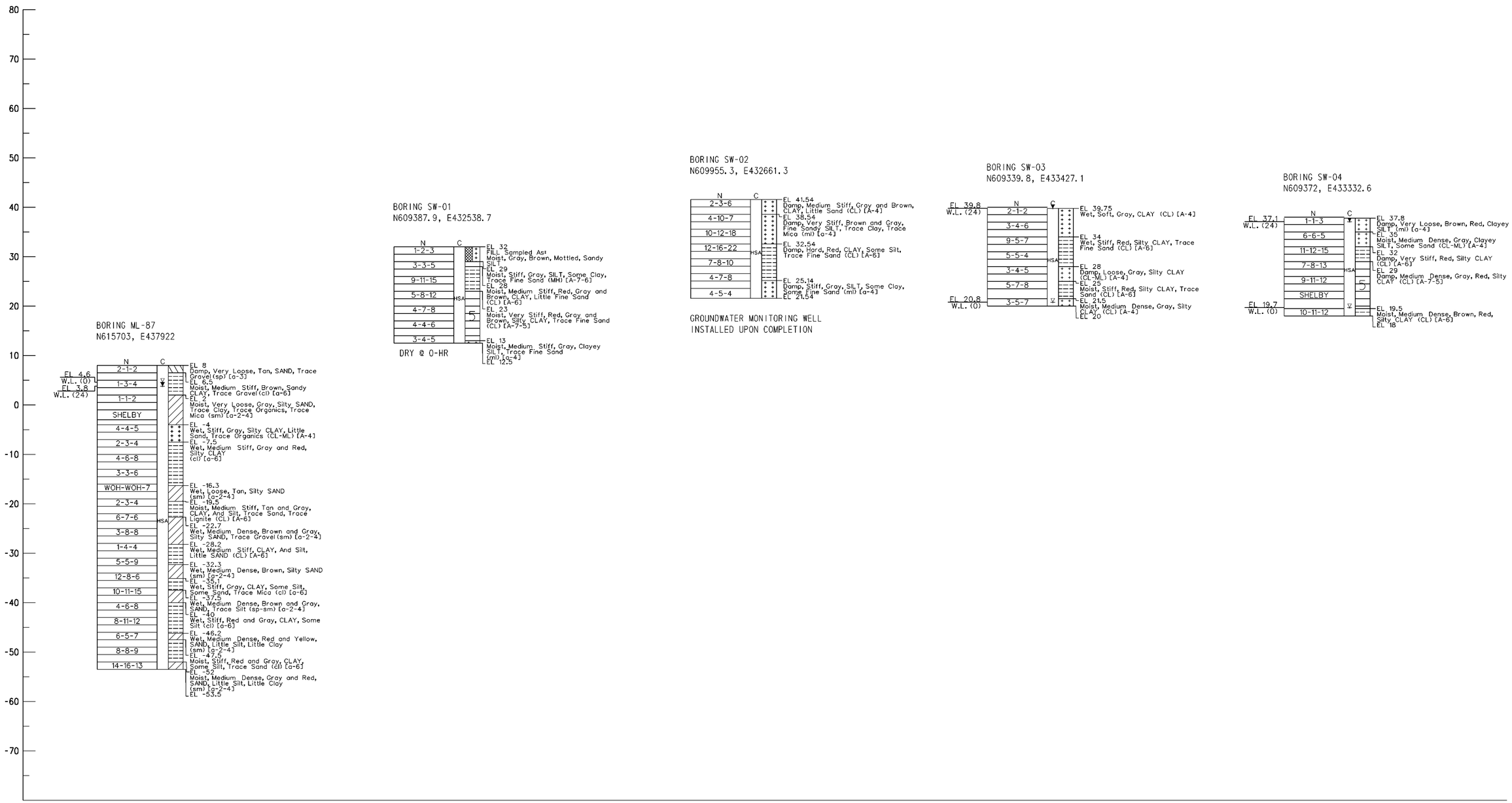

DATUM EL. -80.00

NOTES:

1. FOR BORING NOTES AND INFORMATION SEE SHEET NO. 149 OF 164.
2. FOR BORING LOCATIONS SEE CONSTRUCTION PLAN SHEETS.

DELAWARE DEPARTMENT OF TRANSPORTATION	ADDENDUMS / REVISIONS	SCALE 0 10 20 30 FEET	SR1 / I-95 INTERCHANGE - CHRISTIANA MALL ROAD BRIDGE	CONTRACT T201009004	BRIDGE NO. 1-223	BORING & DRIVE TESTS	SHEET NO. 158
				COUNTY NEW CASTLE	DESIGNED BY: JLT		TOTAL SHTS. 164
					CHECKED BY: EMK		

8/17/2010 4:16:55 PM
M:\projects\2003\03059_delterpx\SRIMall\Cadd\3009004\Plans\bo114_RampR1.dgn

SUMMARY OF INDEX TEST RESULTS

BORING NO.	TOP SAMPLE DEPTH (FT)	NATURAL MOISTURE CONTENT (%)	LL	PL	PI	PERCENT PASSING NO. 200	AASHTO
B-23	24.0	46.0	49	25	24	81	A-7-6
B-23	29.0	2.0	33	21	12	68	A-6
B-23	34.0	3.0	39	22	17	83	A-6
B-23	39.0	40.0	48	27	21	86	A-7-6
IBR-01	5.5	12.8	25	17	8	60	A-4
IBR-01	12.5	17.9	22	17	5	73	A-4
IBR-01	22.5	14.8	28	16	12	93	A-6
IBR-01	29.5	19.6	38	20	18	89	A-6
IBR-01	42.5	24.6	NP	NP	NP	8	A-3
IBR-02	10.0	24.5	40	22	18	92	A-6
IBR-02	45.0	17.9	26	19	7	91	A-4
IBR-02	65.0	21.1	NP	NP	NP	52	A-4
IBR-03	6.0	21.2	41	20	21	86	A-7-5
IBR-03	15.0	17.3	29	17	12	92	A-6
IBR-03	30.0	20.2	50	24	26	92	A-7-5
IBR-03	69.0	20.7	32	20	12	96	A-6
IBR-03	78.0	13.7	20	14	6	54	A-4
IBR-04	6.0	19.9	25	20	5	82	A-4
IBR-04	15.0	22.9	47	24	23	97	A-7-5
IBR-04	32.0	17.6	25	18	7	41	A-4
IBR-04	39.5	19.5	36	22	14	99	A-6
IBR-04	41.5	22.0	36	24	12	97	A-6
IBR-04	51.0	24.0	NP	NP	NP	32	A-2-4
IBR-04	66.0	15.5	NP	NP	NP	81	A-4
IBR-04	78.0	16.0	20	14	6	47	A-4
IBR-04	96.0	20.2	NP	NP	NP	9	A-3
IBR-05	9.0	19.7	46	23	23	89	A-7-5
IBR-05	21.0	26.6	58	29	29	97	A-7-5
IBR-05	30.0	17.5	35	21	14	96	A-6
IBR-05	41.0	17.7	21	17	4	73	A-4
IBR-05	59.0	18.7	NP	NP	NP	45	A-4
IBR-05	71.0	18.8	16	15	1	80	A-4
IBR-05	86.0	23.1	NP	NP	NP	21	A-2-4
IBR-06	9.0	16.7	47	26	21	97	A-7-5
IBR-06	18.0	17.6	40	24	16	91	A-6
IBR-06	48.0	17.3	19	17	2	46	A-4
IBR-06	87.0	22.1	NP	NP	NP	38	A-4
IBR-07	12.0	22.6	45	23	22	98	A-7-5
IBR-07	30.0	20.8	38	21	17	100	A-6
IBR-07	43.0	20.2	38	21	17	99	A-6
IBR-07	52.0	26.6	56	29	27	99	A-7-5
IBR-07	76.0	19.1	NP	NP	NP	31	A-2-4
IBR-07	88.0	14.3	21	15	6	65	A-4
IBR-08	60.0	18.7	NP	NP	NP	45	A-4
IBR-08	81.0	14.5	27	16	11	84	A-6
IBR-09	9.0	13.0	27	17	10	76	A-4
IBR-09	87.0	16.7	24	15	9	79	A-4
IBR-09A	2.5	16.1	28	20	8	98	A-4
IBR-09A	15.0	15.7	41	22	19	86	A-7-5
IBR-09A	30.0	23.8	56	27	29	99	A-7-5
IBR-09A	42.5	11.3	22	17	5	69	A-4
IBR-09A	62.5	14.5	21	15	6	67	A-4
IBR-09A	80.0	17.8	21	15	6	68	A-4
IBR-09A	90.0	18.3	NP	NP	NP	16	A-2-4
IBR-09A	98.5	14.6	NP	NP	NP	11	A-1-b
IBR-10	19.5	31.4	55	27	28	97	A-7-5
IBR-10	24.5	15.4	32	20	12	92	A-6
IBR-10	32.0	21.0	NP	NP	NP	43	A-4
IBR-10	39.5	16.8	29	18	11	73	A-6
IBR-10	49.5	26.4	50	26	24	98	A-7-5
IBR-10	89.5	20.6	NP	NP	NP	17	A-2-4
IBR-12	32.5	12.8	22	16	6	45	A-4
IBR-12	42.5	18.4	23	17	6	94	A-4
IBR-12	75.0	17.5	18	14	4	60	A-4
IBR-12	95.0	18.2	28	17	11	95	A-6
IBR-13	15.0	21.0	62	24	38	97	A-7-5
IBR-13A	7.0	17.3	30	21	9	91	A-4
IBR-13A	24.5	19.8	47	24	23	98	A-7-5
IBR-13A	37.0	20.2	27	19	8	93	A-4
IBR-13A	49.5	17.5	25	19	6	93	A-4

SUMMARY OF INDEX TEST RESULTS

BORING NO.	TOP SAMPLE DEPTH (FT)	NATURAL MOISTURE CONTENT (%)	LL	PL	PI	PERCENT PASSING NO. 200	AASHTO
IBR-13A	62.0	22.6	19	19	NP	53	A-6
IBR-13A	77.0	18.9	NP	NP	NP	11	A-2-4
IBR-13A	87.0	15.3	22	15	7	76	A-4
IBR-14	6.0	15.9	25	15	10	67	A-4
IBR-14	15.0	14.1	24	17	7	62	A-4
IBR-14	21.0	18.9	44	20	24	94	A-7-5
IBR-14	36.0	25.2	60	30	30	98	A-7-5
IBR-14	60.0	7.3	40	21	19	97	A-6
IBR-14	75.0	16.5	30	17	13	88	A-6
IBR-15	6.0	14.7	39	20	19	38	A-6
IBR-15	25.0	19.3	42	22	20	97	A-7-5
IBR-15	29.5	24.0	46	25	21	99	A-7-5
IBR-15	35.0	16.3	23	14	9	67	A-4
IBR-15	47.0	20.9	22	17	5	45	A-4
IBR-15	59.0	16.5	21	14	7	60	A-4
IBR-15	80.0	18.2	NP	NP	NP	28	A-2-4
IBR-15	92.0	19.9	20	14	6	21	A-2-4
IBR-16	7.5	18.0	45	25	20	95	A-7-5
IBR-16	35.0	16.6	66	27	39	99	A-7-5
IBR-17A	12.0	21.3	45	21	24	78	A-7-5
IBR-17A	27.0	16.1	31	18	13	92	A-6
IBR-17A	36.0	14.8	22	16	6	63	A-4
IBR-17A	51.0	18.3	41	21	20	92	A-7-5
IBR-17A	66.0	18.9	25	16	9	78	A-4
IBR-17A	78.0	20.2	20	18	2	51	A-4
IBR-17A	99.0	15.4	19	13	6	61	A-4
IBR-18A	18.0	20.7	32	20	12	97	A-6
IBR-18A	36.0	20.1	50	26	24	87	A-7-5
IBR-18A	54.0	18.2	NP	NP	NP	46	A-4
IBR-18A	79.0	13.6	NP	NP	NP	21	A-2-4
IBR-18B	3.0	17.8	35	20	15	65	A-6
IBR-18B	12.0	16.9	NP	NP	NP	14	A-2-4
IBR-18B	18.0	20.4	37	21	16	95	A-6
IBR-18B	39.0	25.2	67	30	37	100	A-7-5
IBR-18B	60.0	19.6	20	18	2	59	A-4
IBR-18B	78.0	15.8	18	12	6	27	A-2-4
IBR-18B	90.0	15.5	NP	NP	NP	12	A-2-4
IBR-18C	9.0	31.9	42	25	17	76	A-7-5
IBR-18C	21.0	13.8	32	20	12	94	A-6
IBR-18C	36.0	25.0	62	32	30	98	A-7-6
IBR-18C	54.0	20.0	NP	NP	NP	27	A-2-4
IBR-18C	74.0	14.1	23	15	8	78	A-4
IBR-18C	89.0	13.2	NP	NP	NP	12	A-2-4
IBR-19	6.0	15.5	24	16	8	44	A-4
IBR-19	21.0	22.1	49	22	27	99	A-7-5
IBR-19	33.0	20.4	NP	NP	NP	26	A-2-4
IBR-19	42.0	14.9	19	14	5	42	A-4
IBR-19	75.0	22.8	41	20	21	94	A-7-5
IBR-19	90.0	23.8	42	23	19	99	A-7-5
IBR-20	2.5	14.6	NP	NP	NP	23	A-2-4
IBR-20	17.5	24.2	41	22	19	100	A-7-5
IBR-20	40.0	25.4	61	27	34	94	A-7-5
IBR-20	47.5	20.6	44	29	15	98	A-7-5
IBR-20	70.0	25.1	NP	NP	NP	36	A-4
IBR-22	7.5	21.8	50	26	24	95	A-7-5
IBR-22	27.5	9.3	NP	NP	NP	26	A-2-4
IBR-22	35.0	17.0	36	20	16	99	A-6
IBR-22	45.0	18.1	26	19	7	85	A-4
IBR-23	3.0	30.1	42	29	13	46	A-7-5
IBR-23	12.0	19.9	49	19	30	99	A-7-5
IBR-23	24.0	22.3	55	27	28	98	A-7-5
IBR-23	42.0	26.8	49	27	22	99	A-7-5
IBR-23	54.0	20.1	41	22	19	99	A-7-5
IBR-23	72.0	16.7	29	17	12	80	A-6
IBR-23	81.0	16.0	28	17	11	80	A-6
IBR-23	93.0	18.7	NP	NP	NP	19	A-1-b
IBR-24	5.0	21.2	45	20	25	67	A-7-5
IBR-24	40.0	18.9	22	18	4	72	A-4
IBR-24	65.0	19.8	41	22	19	97	A-7-5
IBR-24	85.0	21.3	NP	NP	NP	23	A-2-4

SUMMARY OF INDEX TEST RESULTS

BORING NO.	TOP SAMPLE DEPTH (FT)	NATURAL MOISTURE CONTENT (%)	LL	PL	PI	PERCENT PASSING NO. 200	AASHTO
IBR-24	95.0	15.3	28	18	10	57	A-4
IBR-26	9.0	22.9	26	25	1	95	A-4
IBR-26	18.0	17.7	NP	NP	NP	16	A-1-b
IBR-26	30.0	14.0	30	17	13	66	A-6
IBR-26	42.0	17.3	33	20	13	97	A-6
IBR-26	60.0	35.7	61	29	32	98	A-7-5
IBR-26	66.0	27.7	41	24	17	96	A-7-5
IBR-26	78.0	15.2	32	18	14	92	A-6
IBR-26	81.0	18.0	34	18	16	94	A-6
IBR-26	87.0	16.6	23	15	8	72	A-4
IBR-26	96.0	19.2	NP	NP	NP	37	A-4
IBR-26A	3.0	20.4	28	20	8	76	A-4
IBR-26A	12.0	16.2	NP	NP	NP	26	A-2-4
IBR-26A	24.0	11.5	NP	NP	NP	11	A-1-b
IBR-26A	39.0	17.5	34	19	15	99	A-6
IBR-26A	45.0	14.9	28	17	11	85	A-6
IBR-26A	54.0	15.1	35	20	15	77	A-6
IBR-26A	75.0	28.9	51	25	26	98	A-7-5
IBR-27	15.0	9.9	NP	NP	NP	11	A-1-b
IBR-27	30.0	14.1	28	16	12	49	A-6
IBR-27	48.0	16.5	33	19	14	98	A-6
IBR-27	54.0	15.5	25	15	10	80	A-4
IBR-27	69.0	16.7	25	17	8	68	A-4
IBR-27	84.0	13.5	30	16	14	93	A-6
IBR-27	96.0	17.6	NP	NP	NP	43	A-4
IBR-27A	6.0	18.4	28	21	7	92	A-4
IBR-27A	21.0	16.8	28	18	10	57	A-4
IBR-27A	36.0	34.0	51	26	25	100	A-7-5
IBR-27A	54.0	17.3	23	17	6	60	A-4
IBR-27A	79.0	24.8	56	31	25	99	A-7-6
IBR-27A	94.0	19.8	34	20	14	99	A-6
IBR-28	5.0	11.7	27	18	9	65	A-4
IBR-28	20.0	17.4	21	17	4	17	A-2-4
IBR-28	40.0	15.4	29	17	12	90	A-6
IBR-28	65.0	20.8	43	20	23	96	A-7-5
IBR-28A	9.5	8.7	NP	NP	NP	16	A-2-4
IBR-28A	25.0	8.5	NP	NP	NP	11	A-1-b
IBR-28A	45.0	22.0	NP	NP	NP	41	A-4
IBR-31	9.0	16.2	33	19	14	97	A-6
IBR-31	59.0	21.9	40	23	17	98	A-6
IBR-31	89.0	18.6	25	15	10	50	A-4
IBR-32	20.0	20.8	NP	NP	NP	30	A-2-4
IBR-32	30.0	18.7	25	16	9	57	A-8
IBR-32	67.5	27.8	23	19	4	46	A-4
IBR-32	82.5	17.8	33	19	14	73	A-6
IBR-33	10.0	14.4	NP	NP	NP	20	A-2-4
IBR-33	20.0	17.0	23	18	5	79	A-4
IBR-33	27.5	15.8	30	18	12	89	A-6
IBR-33	35.0	15.8	21	16	5	68	A-4
IBR-33	45.0	15.4	22	15	7	69	A-4
IBR-33	52.5	22.3	43	22	21	95	A-7-5
IBR-33	70.0	30.9	69	34	35	99	A-7-6
IBR-33	85.0	24.1	32	19	13	68	A-6
IBR-33	95.0	32.2	46	25	21	89	A-7-5
IBR-42	6.0	9.9	NP	NP	NP	13	A-1-b
IBR-42	15.0	16.6	24	17	7	25	A-2-4
IBR-42	30.0	33.3	38	20	18	70	A-6
IBR-42	42.0	25.7	41	20	21	89	A-7-5
IBR-42	54.0	27.4	61	28	33	97	A-7-5
IBR-42	72.0	12.9	26	16	10	83	A-4
IBR-42	84.0	12.5	22	15	7	64	A-4
IBR-42A	9.0	5.9	22	15	7	54	A-4
IBR-42A	18.0	16.7	NP	NP	NP	11	A-1-b
IBR-42A	42.0	17.0	29	18	11	92	A-6
IBR-42A	54.0	22.9	46	24	22	88	A-7-5
IBR-42A	66.0	19.9	37	22	15	92	A-6
IBR-42A	72.0	20.4	NP	NP	NP	8	A-3
IBR-42A	87.0	14.1	23	15	8	74	A-4
IBR-43	15.0	23.8	47	23	24	99	A-7-5
IBR-43	22.5	17.6	32	20	12	91	A-6

NOTES:

1. LL = LIQUID LIMIT
2. PL = PLASTIC LIMIT
3. PI = PLASTICITY INDEX

8/17/2010 4:18:35 PM
M:\PROJECTS\2003\03059_DELTRNPK\SR1MALL\CADD\3009004\PLANS\B0120_RAMPR1.DGN

DELAWARE DEPARTMENT OF TRANSPORTATION

ADDENDUMS / REVISIONS

NOT TO SCALE

SR1/I-95 INTERCHANGE - CHRISTIANA MALL ROAD BRIDGE

CONTRACT	BRIDGE NO.	1-223
T201009004	DESIGNED BY:	JLT
COUNTY		
NEW CASTLE	CHECKED BY:	EMK

SUMMARY OF LABORATORY DATA

SHEET NO. 159
TOTAL SHTS. 164

SUMMARY OF INDEX TEST RESULTS

BORING NO.	TOP SAMPLE DEPTH (FT)	NATURAL MOISTURE CONTENT (%)	LL	PL	PI	PERCENT PASSING NO. 200	AASHTO
IBR-43	40.0	17.7	30	20	10	99	A-4
IBR-43	50.0	23.8	54	29	25	89	A-7-5
IBR-43	75.0	16.4	26	15	11	78	A-6
IBR-44	3.5	11.4	22	14	8	35	A-2-4
IBR-44	38.5	19.9	29	17	12	88	A-6
IBR-44	93.5	21.6	NP	NP	NP	20	A-1-b
IBR-45	3.0	14.5	25	16	9	70	A-4
IBR-45	45.0	22.2	NP	NP	NP	47	A-4
IBR-45	78.0	17.8	21	13	8	60	A-4
IBR-46	0.0	13.9	26	20	6	85	A-4
IBR-46	12.0	17.2	NP	NP	NP	20	A-2-4
IBR-46	36.0	24.4	49	24	25	93	A-7-5
IBR-46	51.0	22.0	NP	NP	NP	31	A-2-4
IBR-46	93.0	17.1	23	16	7	80	A-4
IBR-47	4.0	12.9	19	17	2	45	A-4
IBR-47	49.0	23.4	37	20	17	81	A-6
IBR-47	98.5	23.5	24	16	8	74	A-4
IBR-48	0.0	12.7	25	17	8	67	A-4
IBR-48	15.0	23.4	49	26	23	97	A-7-5
IBR-48	36.0	20.1	41	22	19	90	A-7-5
IBR-48	57.0	25.2	NP	NP	NP	11	A-2-4
IBR-48	75.0	20.2	NP	NP	NP	20	A-2-4
IBR-49	0.0	19.8	24	20	4	62	A-4(0)
IBR-49	2.0	17.5	35	17	17	92	A-6(15)
IBR-49	8.0	19.2	44	21	23	91	A-7-6(22)
IBR-49	10.0	18.6	45	21	25	90	A-7-6(24)
IBR-49	12.0	20.9	54	24	29	94	A-7-6(32)
IBR-49	14.0	25.4	61	27	34	98	A-7-6(39)
IBR-49	18.0	20.0	38	19	19	81	A-6(15)
IBR-49	24.0	20.9	29	18	11	75	A-6(6)
IBR-49	25.0	20.3	22	NP	NP	36	A-4(0)
IBR-49	29.0	21.6	NV	NP	NP	12	A-2-4(0)
IBR-49	34.0	25.5	50	22	28	94	A-7-6(29)
IBR-49	39.0	21.8	39	22	18	97	A-6(18)
IBR-49	44.0	19.7	28	18	10	89	A-4(8)
IBR-49	49.0	22.1	19	NP	NP	69	A-4(0)
IBR-49	54.0	21.7	23	NP	NP	84	A-4(0)
IBR-49	59.0	21.6	NV	NP	NP	20	A-2-4(0)
IBR-49	64.0	19.1	25	18	6	92	A-4(5)
IBR-49	69.0	21.5	NV	NP	NP	17	A-2-4(0)
IBR-49	74.0	21.5	18	NP	NP	62	A-4(0)
IBR-49	74.5	23.6	NV	NP	NP	37	A-4(0)
IBR-50	0.0	16.3	29	22	6	76	A-4(4)
IBR-50	2.0	13.1	21	NP	NP	53	A-4(0)
IBR-50	4.0	18.7	33	20	13	82	A-6(10)
IBR-50	6.0	19.0	37	22	15	89	A-6(14)
IBR-50	8.0	19.9	34	20	14	81	A-6(10)
IBR-50	10.0	23.8	49	25	24	96	A-7-6(26)
IBR-50	12.0	22.7	NV	NP	NP	1	A-3
IBR-50	14.0	23.4	51	26	25	97	A-7-6(28)
IBR-50	16.0	25.3	57	27	31	94	A-7-6(33)
IBR-50	18.0	23.7	54	26	28	98	A-7-6(32)
IBR-50	24.0	20.3	32	23	9	87	A-4(8)
IBR-50	29.0	24.1	NV	NP	NP	93	A-4(0)
IBR-50	39.0	21.6	18	NP	NP	52	A-4(0)
IBR-50	44.0	21.9	20	NP	NP	56	A-4(0)
IBR-50	49.0	20.0	20	NP	NP	54	A-4(0)
IBR-50	54.0	24.9	22	NP	NP	50	A-4(0)
IBR-50	59.0	19.5	20	15	5	56	A-4(0)
IBR-50	64.0	20.6	NV	NP	NP	22	A-2-4(0)
IBR-50	69.0	20.0	NV	NP	NP	36	A-4(0)
IBR-50	73.0	21.8	NV	NP	NP	19	A-2-4(0)
IBR-51	0.5	16.4	28	21	7	60	A-4(2)
IBR-51	2.0	15.2	23	16	7	77	A-4(3)
IBR-51	4.0	15.9	23	19	4	93	A-4(2)
IBR-51	6.0	18.6	27	21	6	98	A-4(5)
IBR-51	8.0	20.9	28	22	6	99	A-4(6)
IBR-51	10.0	18.4	28	19	9	96	A-4(8)
IBR-51	14.0	21.6	24	17	7	76	A-4(3)
IBR-51	16.0	23.0	22	16	5	53	A-4(0)

SUMMARY OF INDEX TEST RESULTS

BORING NO.	TOP SAMPLE DEPTH (FT)	NATURAL MOISTURE CONTENT (%)	LL	PL	PI	PERCENT PASSING NO. 200	AASHTO
IBR-51	18.0	21.2	46	23	23	95	A-7-6(24)
IBR-51	24.0	15.9	30	18	12	93	A-6(10)
IBR-51	29.0	18.7	47	21	26	91	A-7-6(25)
IBR-51	34.0	24.2	57	29	28	98	A-7-6(33)
IBR-51	39.0	20.6	50	24	26	99	A-7-6(29)
IBR-51	45.0	18.3	20	NP	NP	39	A-4(0)
IBR-51	49.0	16.9	21	15	6	76	A-4(2)
IBR-51	54.0	22.9	43	21	22	94	A-7-6(22)
IBR-51	59.0	25.6	48	27	22	98	A-7-6(25)
IBR-51	64.0	24.0	22	NP	NP	65	A-4(0)
IBR-51	69.0	19.1	20	15	5	67	A-4(1)
IBR-51	73.0	26.5	NV	NP	NP	26	A-2-4(0)
IBR-52	1.0	7.9	26	18	9	47	A-4(1)
IBR-52	2.0	11.2	16	NP	NP	66	A-4(0)
IBR-52	4.0	23.2	22	NP	NP	70	A-4(0)
IBR-52	6.0	16.5	20	17	2	78	A-4(0)
IBR-52	8.0	23.6	NV	NP	NP	43	A-4(0)
IBR-52	10.0	22.6	19	NP	NP	59	A-4(0)
IBR-52	12.0	26.0	23	20	3	69	A-4(0)
IBR-52	14.0	25.6	42	22	20	94	A-7-6(20)
IBR-52	18.0	20.2	48	21	28	93	A-7-6(28)
IBR-52	22.0	20.4	51	23	29	95	A-7-6(30)
IBR-52	29.0	23.4	54	27	27	98	A-7-6(31)
IBR-52	34.0	24.8	45	13	33	97	A-7-6(33)
IBR-52	35.0	17.8	29	21	8	84	A-4(5)
IBR-52	39.0	25.4	NV	NP	NP	17	A-2-4(0)
IBR-52	44.0	14.3	21	NP	NP	58	A-4(0)
IBR-52	49.0	20.4	NV	NP	NP	44	A-4(0)
IBR-52	54.0	18.0	19	NP	NP	47	A-4(0)
IBR-52	59.0	27.3	NV	NP	NP	30	A-2-4(0)
IBR-52	64.0	22.8	21	NP	NP	52	A-4(0)
IBR-52	69.0	21.9	NV	NP	NP	17	A-2-4(0)
IBR-52	73.0	22.0	20	NP	NP	54	A-4(0)
IBR-53	0.0	12.1	22	18	4	64	A-4(0)
IBR-53	1.5	5.0	NV	NP	NP	25	A-2-4(0)
IBR-53	2.0	7.0	NV	NP	NP	12	A-2-4(0)
IBR-53	4.0	20.8	NV	NP	NP	15	A-2-4(0)
IBR-53	6.0	30.7	30	22	9	82	A-4(6)
IBR-53	7.5	24.5	40	21	18	97	A-6(20)
IBR-53	8.0	20.8	41	20	21	93	A-7-6(20)
IBR-53	10.0	21.8	38	22	16	90	A-6(15)
IBR-53	14.0	24.6	43	25	18	95	A-7-6(19)
IBR-53	16.0	22.4	38	22	16	96	A-6(16)
IBR-53	18.0	24.2	47	26	21	100	A-7-6(25)
IBR-53	24.0	20.2	33	24	8	87	A-4(7)
IBR-53	29.0	20.1	23	14	9	71	A-4(3)
IBR-53	34.0	17.1	33	19	14	84	A-6(11)
IBR-53	39.0	17.1	24	21	4	89	A-4(2)
IBR-53	44.0	23.2	21	NP	NP	65	A-4(0)
IBR-53	49.0	24.8	NV	NP	NP	34	A-2-4(0)
IBR-53	54.0	25.7	NV	NP	NP	21	A-2-4(0)
IBR-53	59.0	21.9	NV	NP	NP	12	A-2-4(0)
IBR-53	64.0	22.8	15	NP	NP	49	A-4(0)
IBR-53	69.0	18.5	17	NP	NP	66	A-4(0)
IBR-53	74.0	15.7	NV	NP	NP	25	A-2-4(0)
IBR-54	0.0	17.4	22	17	5	75	A-4(1)
IBR-54	2.0	15.3	28	17	11	87	A-6(8)
IBR-54	4.0	24.8	48	22	26	84	A-7-6(23)
IBR-54	6.0	22.8	52	22	29	86	A-7-6(27)
IBR-54	8.0	18.8	37	21	16	90	A-6(15)
IBR-54	10.0	18.5	36	21	15	88	A-6(13)
IBR-54	12.0	20.8	37	19	19	90	A-6(16)
IBR-54	14.0	23.4	46	25	21	94	A-7-6(22)
IBR-54	16.0	24.8	42	25	17	93	A-7-6(18)
IBR-54	18.0	19.7	34	22	12	93	A-6(11)
IBR-54	24.0	22.6	73	26	46	95	A-7-6(50)
IBR-54	29.0	26.4	NV	NP	NP	13	A-2-4(0)
IBR-54	34.0	17.5	28	19	10	10	A-4(8)
IBR-54	39.0	16.0	16	NP	NP	33	A-2-4(0)
IBR-54	44.0	19.8	19	NP	NP	61	A-4(0)

SUMMARY OF INDEX TEST RESULTS

BORING NO.	TOP SAMPLE DEPTH (FT)	NATURAL MOISTURE CONTENT (%)	LL	PL	PI	PERCENT PASSING NO. 200	AASHTO
IBR-54	49.0	21.0	19	NP	NP	66	A-4(0)
IBR-54	54.0	41.3	21	NP	NP	-	-
IBR-54	55.0	53.8	NV	NP	NP	-	-
IBR-54	59.0	32.3	NV	NP	NP	19	A-2-4(0)
IBR-54	64.0	22.1	19	NP	NP	80	A-4(0)
IBR-54	69.0	26.7	NV	NP	NP	23	A-2-4(0)
IBR-54	73.0	25.3	20	18	2	73	A-4(0)
IBR-55	0.5	11.5	22	17	5	43	A-4(0)
IBR-55	2.0	17.5	26	21	5	82	A-4(3)
IBR-55	4.0	11.4	16	NP	NP	40	A-4(0)
IBR-55	6.0	10.5	16	NP	NP	35	A-2-4(0)
IBR-55	8.0	11.5	18	NP	NP	35	A-2-4(0)
IBR-55	10.0	10.0	22	NP	NP	25	A-1-b
IBR-55	12.0	14.7	22	NP	NP	26	A-2-4(0)
IBR-55	14.0	15.9	22	NP	NP	74	A-4(0)
IBR-55	16.0	17.5	22	NP	NP	82	A-4(0)
IBR-55	18.0	18.4	25	NP	NP	92	A-4(0)
IBR-55	24.0	21.6	40	24	16	99	A-6(18)
IBR-55	29.0	20.9	38	23	16	84	A-6(13)
IBR-55	34.0	19.5	32	21	11	98	A-6(11)
IBR-55	38.0	19.1	28	22	6	99	A-4(6)
IBR-55	44.0	18.4	25	19	6	94	A-4(4)
IBR-55	49.0	18.7	23	17	6	82	A-4(3)
IBR-55	54.0	23.0	35	24	11	96	A-6(11)
IBR-55	59.0	26.3	43	25	18	98	A-7-6(19)
IBR-55	64.0	29.0	46	32	14	97	A-7-5(18)
IBR-55	69.0	29.8	55	29	26	94	A-7-6(29)
IBR-55	74.0	32.2	48	29	18	99	A-7-6(23)
IBR-56	0.5	11.4	23	17	7	46	A-4(0)
IBR-56	2.0	9.8	18	NP	NP	39	A-4(0)
IBR-56	4.0	8.2	NV	NP	NP	10	A-1-b
IBR-56	6.0	8.6	NV	NP	NP	18	A-1-b
IBR-56	8.0	9.0	NV	NP	NP	18	A-1-b
IBR-56	10.0	9.0	NV	NP	NP	15	A-1-b
IBR-56	12.0	25.1	NV	NP	NP	25	A-2-4 (0)
IBR-56	14.0	16.0	25	16	9	72	A-4(4)
IBR-56	16.0	19.2	41	17	24	87	A-7-6(21)
IBR-56	18.0	17.4	34	20	15	91	A-6(13)
IBR-56	24.0	17.8	29	19	10	85	A-4(7)
IBR-56	29.0	20.7	34	20	14	94	A-6(13)
IBR-56	34.0	17.4	27	19	8	91	A-4(6)
IBR-56	39.0	21.2	32	19	13	92	A-6(11)
IBR-56	44.0	17.2	20	NP	NP	77	A-4(0)
IBR-56	49.0	27.6	57	29	27	98	A-7-6(32)
IBR-56	54.0	19.2	37	20	17	94	A-6(16)
IBR-56	59.0	25.9	50	24	26	97	A-7-6(29)
IBR-56	64.0	28.1	52	26	26	98	A-7-6(30)
IBR-56	69.0	31.4	54	28	26	98	A-7-6(30)
IBR-56	74.0	18.2	26	17	10	51	A-4(2)
IBR-57	0.5	15.4	22	NP	NP	63	A-4
IBR-57	2.0	12.9	27	18	9	30	A-2-4
IBR-57	4.0	12.2	20	NP	NP	31	A-2-4
IBR-57	6.0	11.0	NP	NP	NP	17	A-1-b
IBR-57	8.0	13.5	23	18	5	27	A-2-4
IBR-57	10.0	14.7	NP	NP	NP	19	A-1-b
IBR-57	12.0	14.6	NP	NP	NP	22	A-1-b
IBR-57	14.0	18.5	NP	NP	NP	22	A-2-4
IBR-57	16.0	18.5	NP	NP	NP	19	A-1-b
IBR-57	18.0	17.3	24	19	5	61	A-4
IBR-57	24.0	20.1	27	18	9	89	A-4
IBR-57	28.0	19.6	31	18	13	92	A-6
IBR-57	34.0	20.9	22	18	4	73	A-4
IBR-57	39.0	19.7	21	18	3	81	A-4
IBR-57	44.0	18.4	20	NP	NP	80	A-4
IBR-57	49.0	19.7	34	20	14	83	A-6
IBR-57	54.0	23.5	40	22	18	93	A-6
IBR-57	59.0	24.3	50	27	23	99	A-7-6
IBR-57	64.0	23.5	49	25	24	86	A-7-6
IBR-57	69.0	28.6	47	27	20	94	A-7-6
IBR-57	74.0	21.1	36	19	17	61	A-6

NOTES:

1. LL = LIQUID LIMIT
2. PL = PLASTIC LIMIT
3. PI = PLASTICITY INDEX

DELAWARE DEPARTMENT OF TRANSPORTATION

ADDENDUMS / REVISIONS

NOT TO SCALE

SR1/I-95 INTERCHANGE - CHRISTIANA MALL ROAD BRIDGE

CONTRACT	BRIDGE NO.	1-223
T201009004	DESIGNED BY:	JLT
COUNTY		
NEW CASTLE	CHECKED BY:	EMK

SUMMARY OF LABORATORY DATA

SHEET NO. 160

TOTAL SHTS. 164

8/17/2010 4:20:13 PM
M:\PROJECTS\2003\03059_DELTRNPK\SRIMALL\CADD\3009004\P_ANS\BO121_RAWPR1.DGN

SUMMARY OF INDEX TEST RESULTS

BORING NO.	TOP SAMPLE DEPTH (FT)	NATURAL MOISTURE CONTENT (%)	LL	PL	PI	PERCENT PASSING NO. 200	AASHTO
IBR-58	2.0	8.7	23	16	7	30	A-2-4
IBR-58	4.0	12.1	31	20	11	25	A-2-6
IBR-58	6.0	10.0	25	NP	NP	19	A-1-b
IBR-58	8.0	9.5	NV	NP	NP	23	A-2-4
IBR-58	10.0	8.1	NV	NP	NP	13	A-1-b
IBR-58	12.0	11.4	NV	NP	NP	14	A-1-b
IBR-58	14.0	12.9	NV	NP	NP	15	A-1-b
IBR-58	16.0	15.9	NV	NP	NP	18	A-2-4
IBR-58	18.0	18.7	NV	NP	NP	17	A-2-4
IBR-58	29.0	17.1	15	NP	NP	38	A-4
IBR-58	34.0	17.5	41	18	23	79	A-7-6
IBR-58	37.0	18.3	40	21	19	88	A-6
IBR-58	39.0	18.3	21	17	5	70	A-4
IBR-58	44.0	20.2	23	17	6	78	A-4
IBR-58	49.0	21.8	24	17	7	84	A-4
IBR-58	54.0	21.5	25	17	7	81	A-4
IBR-58	59.0	21.7	42	23	19	19	A-7-6
IBR-58	64.0	24.3	49	27	22	96	A-7-6
IBR-58	69.0	24.4	34	22	12	84	A-6
IBR-58	74.0	22.0	40	19	21	83	A-6
IBR-59	0.5	10.3	NV	NP	NP	21	A-2-4(0)
IBR-59	2.0	10.7	NV	NP	NP	20	A-1-b
IBR-59	4.0	10.6	NV	NP	NP	5	A-1-b
IBR-59	6.0	10.8	NV	NP	NP	17	A-1-b
IBR-59	8.0	19.2	NV	NP	NP	29	A-2-4(0)
IBR-59	10.0	13.3	NV	NP	NP	8	A-1-b
IBR-59	12.0	15.8	20	NP	NP	62	A-4(0)
IBR-59	14.0	18.4	14	11	3	70	A-4(0)
IBR-59	16.0	26.9	23	19	5	61	A-4(0)
IBR-59	18.0	24.4	16	NP	NP	36	A-4(0)
IBR-59	24.0	17.3	22	17	5	59	A-4(0)
IBR-59	29.0	18.9	19	NP	NP	69	A-4(0)
IBR-59	34.0	26.0	NV	NP	NP	42	A-4(0)
IBR-59	39.0	24.9	34	20	14	88	A-6(12)
IBR-59	44.0	23.9	46	25	21	98	A-7-6(24)
IBR-59	49.0	26.0	55	26	29	99	A-7-6(34)
IBR-59	54.0	15.4	29	18	11	68	A-6(5)
IBR-59	56.0	23.2	22	16	6	56	A-4(1)
IBR-59	58.0	21.0	33	19	14	75	A-6(9)
IBR-59	64.0	21.0	NV	NP	NP	14	A-2-4(0)
IBR-59	69.0	25.0	41	25	16	82	A-7-6(14)
IBR-59	74.0	25.0	41	25	16	82	A-7-6(14)
IBR-60	2.5	9.0	22	16	6	30	A-2-4(0)
IBR-60	4.0	7.8	NV	NP	NP	16	A-1-b
IBR-60	6.0	6.7	NV	NP	NP	11	A-1-b
IBR-60	8.0	10.9	NV	NP	NP	17	A-1-b
IBR-60	10.0	9.3	NV	NP	NP	14	A-1-b
IBR-60	12.0	12.9	NV	NP	NP	7	A-1-b
IBR-60	14.0	21.5	30	19	11	69	A-6(6)
IBR-60	16.0	20.1	27	19	8	78	A-4(5)
IBR-60	24.0	20.1	23	18	5	61	A-4(0)
IBR-60	29.0	20.2	21	17	5	70	A-4(0)
IBR-60	34.0	24.5	21	NP	NP	58	A-4(0)
IBR-60	39.0	27.3	30	20	9	67	A-4(4)
IBR-60	49.0	24.2	46	21	24	87	A-7-6(23)
IBR-60	59.0	18.1	27	17	10	66	A-4(4)
IBR-60	64.0	24.7	45	25	20	98	A-7-6(22)
IBR-60	69.0	20.6	27	16	11.6	44	A-6(2)
IBR-60	73.0	23.8	33	18	15	64	A-6(7)
IBR-61	2.0	12.1	25	22	3	42	A-4(0)
IBR-61	4.0	14.0	24	15	9	32	A-2-4(0)
IBR-61	6.0	10.6	23	19	4	15	A-1-b
IBR-61	8.0	10.1	21	NP	NP	15	A-1-b
IBR-61	10.0	13.3	NV	NP	NP	78	A-4(0)
IBR-61	12.0	23.3	30	22	8	41	A-4(0)
IBR-61	16.0	23.1	31	22	9	99	A-4(9)
IBR-61	18.0	22.7	35	23	11	97	A-6(11)
IBR-61	24.0	19.0	25	18	8	75	A-4(3)
IBR-61	29.0	19.1	24	17	7	70	A-4(3)
IBR-61	34.0	23.1	18	NP	NP	51	A-4(0)

SUMMARY OF INDEX TEST RESULTS

BORING NO.	TOP SAMPLE DEPTH (FT)	NATURAL MOISTURE CONTENT (%)	LL	PL	PI	PERCENT PASSING NO. 200	AASHTO
IBR-61	39.0	26.6	25	16	10	52	A-4(2)
IBR-61	44.0	23.2	41	22	20	93	A-7-6(19)
IBR-61	49.0	30.2	64	27	37	94	A-7-6(40)
IBR-61	54.0	23.2	52	25	28	98	A-7-6(30)
IBR-61	64.0	33.2	52	31	21	99	A-7-5(26)
IBR-61	69.0	33.8	49	32	17	97	A-7-5(21)
IBR-61	74.0	19.1	36	23	13	83	A-6(11)
IBR-61	74.5	20.7	28	17	11	58	A-6(4)
IBR-61	79.0	20.8	30	20	10	75	A-4(6)
IBR-61	84.0	29.6	48	31	17	91	A-7-5(19)
IBR-61	89.0	20.5	33	22	11	72	A-6(7)
IBR-61	93.0	17.2	29	18	11	63	A-6(4)
IBR-61	95.0	19.9	35	23	12	76	A-6(8)
IEB-01	12.0	14.0	27	18	9	78	A-4
IEB-01	30.0	21.7	35	22	13	99	A-6
IEB-01	38.5	19.3	22	16	6	74	A-4
IEB-02	6.0	18.1	31	17	14	84	A-6
IEB-02	24.0	17.9	37	20	17	98	A-6
IEB-02	33.5	19.3	17	15	2	23	A-2-4
IEB-03	4.5	8.6	21	68	NP	36	A-6
IEB-03	20.0	16.6	24	17	7	80	A-4
IEB-03	38.5	14.3	34	18	16	91	A-6
IEB-04	5.0	13.4	21	14	7	34	A-2-4
IEB-04	15.0	19.2	NP	NP	NP	64	A-4
IEB-04	35.0	22.2	52	27	25	97	A-7-5
IEB-13	3.0	14.0	24	21	3	21	A-2-4
IEB-13	21.0	15.9	34	19	15	72	A-6
IEB-13	30.0	24.3	35	19	16	80	A-6
IEB-13	39.0	16.4	39	18	21	88	A-6
IEB-13A	3.0	20.8	26	17	9	50	A-4
IEB-13A	7.5	17.7	33	20	13	40	A-6
IEB-13A	18.5	16.9	36	22	14	84	A-6
IEB-13A	25.0	17.3	31	19	12	96	A-6
IEB-13A	37.0	20.1	30	19	11	76	A-8
IEB-14	3.0	18.7	28	20	8	98	A-4
IEB-14	9.0	14.3	32	17	15	77	A-6
IEB-14	12.0	15.6	34	17	17	89	A-6
IEB-15	0.0	12.4	26	18	8	54	A-4
IEB-15	2.0	19.1	28	20	8	76	A-4
IEB-15	4.0	17.6	28	19	9	62	A-4
IEB-15	6.0	12.6	23	16	7	29	A-2-4
IEB-15	8.0	24.0	49	25	24	91	A-7-6
IEB-15	10.0	25.5	40	26	14	95	A-6
IEB-15	14.0	22.3	34	24	10	91	A-4
IEB-15	16.0	19.1	27	22	5	73	A-4
IEB-15	18.0	18.8	29	21	8	73	A-4
IEB-15	24.0	21.7	37	24	13	90	A-6
IEB-15	29.0	18.2	37	20	17	93	A-6
IEB-15	34.0	17.9	38	19	19	84	A-6
IEB-15	39.0	26.4	61	32	29	100	A-7-5
IEB-15	44.0	20.4	37	24	13	83	A-6
IEB-15	49.0	17.3	24	NP	NP	50	A-4
IEB-15	54.0	19.0	32	19	13	83	A-6
IEB-15	59.0	17.8	31	19	12	86	A-6
IEB-15	64.0	18.7	21	19	12	92	A-6
IEB-15	69.0	19.1	21	17	4	60	A-4
IEB-15	74.0	18.9	20	NP	NP	65	A-4
IEB-15	79.0	20.5	19	NP	NP	49	A-4
IEB-15	84.0	25.3	NP	NP	NP	18	A-2-4
IEB-15	89.0	20.3	NP	NP	NP	20	A-2-4
IEB-15	94.0	19.4	NP	NP	NP	22	A-2-4
IEB-15	98.0	18.5	NP	NP	NP	22	A-2-4
IRW-02	10.0	0.5	32	20	12	87	A-6
IRW-02	20.0	16.4	26	16	10	88	A-4
IRW-02	25.0	18.5	25	17	8	90	A-4
IRW-02	30.0	18.8	21	17	4	73	A-4
IRW-03	4.0	8.7	18	13	5	26	A-2-4
IRW-03	15.0	23.8	49	31	18	84	A-7-6
IRW-03	25.0	17.8	28	18	10	99	A-4
IRW-03	35.0	18.5	29	18	11	98	A-6

SUMMARY OF INDEX TEST RESULTS

BORING NO.	TOP SAMPLE DEPTH (FT)	NATURAL MOISTURE CONTENT (%)	LL	PL	PI	PERCENT PASSING NO. 200	AASHTO
IRW-04	1.5	7.5	NP	NP	NP	17	A-2-4
IRW-04	15.0	17.9	36	21	15	87	A-6
IRW-04	35.0	26.8	NP	NP	NP	5	A-3
IRW-05	9.5	21.9	37	18	19	93	A-6
IRW-05	20.0	19.5	32	16	16	88	A-6
IRW-05	30.0	19.9	NP	NP	NP	48	A-4
IRW-06	6.0	10.5	35	21	14	65	A-6
IRW-06	15.0	8.4	38	19	19	75	A-6
IRW-06	25.0	20.8	24	17	7	87	A-4
IRW-07	2.5	13.6	27	16	11	63	A-6
IRW-07	7.5	13.9	28	19	9	63	A-4
IRW-07	15.0	18.8	27	25	2	79	A-4
IRW-07A	5.0	13.6	24	15	9	65	A-4
IRW-07A	30.0	19.7	28	18	10	75	A-4
IRW-08	7.5	12.3	23	16	7	60	A-4
IRW-08	12.5	15.0	26	17	9	86	A-4
IRW-10	10.0	20.4	39	21	18	99	A-6
IRW-10	25.0	23.9	60	24	36	96	A-7-5
IRW-10	33.0	21.1	36	21	15	89	A-6
IRW-11	10.0	15.8	19	16	3	52	A-4
IRW-11	20.0	17.4	26	15	11	59	A-6
IRW-12	7.5	19.8	43	20	23	77	A-7-5
IRW-12	15.0	19.8	52	22	30	91	A-7-5
IRW-12	33.0	14.1	27	16	11	86	A-6
IRW-13	2.0	18.5	33	20	13	98	A-6
IRW-13	35.0	24.7	54	27	27	99	A-7-5
IRW-14	9.0	15.6	25	15	10	76	A-4
IRW-14	12.0	14.8	19	14	5	62	A-4
IRW-14	27.0	21.3	45	22	23	99	A-7-5
IRW-15	9.0	13.7	32	17	15	46	A-6
IRW-15	24.0	21.7	47	22	25	97	A-7-5
IRW-16	7.5	10.7	NP	NP	NP	15	A-2-4
IRW-16	17.5	15.1	24	19	5	61	A-8
IRW-16	35.0	21.7	NP	NP	NP	11	A-1-a
IRW-17	4.5	14.0	27	17	10	59	A-4
IRW-17	19.5	22.6	46	25	21	96	A-7-5
IRW-17	29.5	16.6	28	17	11	93	A-6
IRW-17	49.0	20.3	26	18	8	74	A-4
IRW-18	6.0	20.1	24	19	5	96	A-4
IRW-18	12.0	15.2	21	15	6	43	A-4
IRW-18	27.0	22.6	37	22	15	90	A-6
IRW-18	36.0	18.7	40	22	18	99	A-6
IRW-18	42.0	12.4	25	17	8	90	A-4
IRW-19	4.0	15.3	NP	NP	NP	9	A-1-a
IRW-19	15.0	28.6	48	27	21	90	A-7-5
IRW-19	25.0	15.3	26	18	8	62	A-4
IRW-19	34.0	18.6	39	22	17	99	A-6
IRW-19	45.0	16.4	24	16	8	67	A-4
IRW-20	6.0	8.2	21	15	6	14	A-2-4
IRW-20	15.0	21.6	49	24	25	99	A-7-5
IRW-20	27.0	4.1	NP	NP	NP	20	A-2-4
IRW-21	3.0	24.8	26	18	8	99	A-4
IRW-21	12.0	12.4	25	15	10	43	A-4
IRW-21	37.0	15.9	25	16	9	90	A-4
IRW-21	46.0	19.9	33	20	13	92	A-6
IRW-22	17.5	19.3	40	23	17	93	A-6
IRW-22	30.0	12.6	24	19	5	63	A-4
IRW-22	48.5	27.9	NP	NP	NP	31	A-2-4
IRW-23	39.5	19.2	36	23	13	97	A-6
IRW-24	7.5	23.8	39	21	18	82	A-6
IRW-24	12.5	21.7	42	23	19	95	A-7-5
IRW-24	27.5	17.1	35	20	15	100	A-6
IRW-25	3.0	17.9	27	19	8	81	A-4
IRW-26	5.0	12.7	30	18	12	34	A-2-6
IRW-26	17.5	26.0	57	29	28	99	A-7-5
IRW-26	30.0	20.5	NP	NP	NP	18	A-2-4
IRW-26	42.5	20.0	33	19	14	82	A-6
IRW-27	8.0	12.9	32	18	14	65	A-6
IRW-27	20.0	15.8	29	15	14	64	A-6
IRW-28	12.0	16.3	33	19	14	94	A-6

NOTES:

1. LL = LIQUID LIMIT
2. PL = PLASTIC LIMIT
3. PI = PLASTICITY INDEX

8/17/2010 4:21:14 PM
M:\PROJECTS\2003\03059_DELTRNPK\SRIMALL\CADD\3009004\PLANS\BO122_RAMPR1.DGN

DELAWARE DEPARTMENT OF TRANSPORTATION

ADDENDUMS / REVISIONS

NOT TO SCALE

SR1/I-95 INTERCHANGE - CHRISTIANA MALL ROAD BRIDGE

CONTRACT	BRIDGE NO.	1-223
T201009004	DESIGNED BY:	JLT
COUNTY		
NEW CASTLE	CHECKED BY:	EMK

SUMMARY OF LABORATORY DATA

SHEET NO. 161
TOTAL SHTS. 164

SUMMARY OF INDEX TEST RESULTS

BORING NO.	TOP SAMPLE DEPTH (FT)	NATURAL MOISTURE CONTENT (%)	LL	PL	PI	PERCENT PASSING NO. 200	AASHTO
IRW-28	24.0	19.7	43	19	24	78	A-7-5
IRW-28	33.0	26.8	56	30	26	99	A-7-5
IRW-28	48.5	21.4	22	17	5	76	A-4
IRW-29	3.0	14.4	28	19	9	76	A-4
IRW-29	9.0	19.8	27	21	6	87	A-4
IRW-29	21.0	21.7	44	23	21	91	A-7-5
IRW-29	36.0	17.3	36	21	15	95	A-6
IRW-29	48.5	21.8	20	17	3	34	A-2-4
IRW-30	6.0	14.9	43	23	20	57	A-7-5
IRW-30	9.0	18.8	24	17	7	60	A-4
IRW-30	42.0	13.0	NP	NP	NP	39	A-4
IRW-31	9.0	11.3	24	16	8	32	A-2-4
IRW-31	27.0	25.2	46	23	23	95	A-7-5
IRW-31	42.0	14.8	22	18	4	55	A-4
IRW-32	12.5	20.9	26	22	4	93	A-4
IRW-32	37.5	16.8	41	19	22	87	A-7-5
IRW-33	6.0	22.6	27	21	6	83	A-4
IRW-33	9.0	16.7	25	17	8	69	A-4
IRW-33A	12.0	22.7	22	16	6	68	A-4
IRW-34	12.0	20.6	29	19	10	61	A-4
IRW-34	24.0	13.0	30	17	13	65	A-6
IRW-34	43.5	21.8	37	20	17	99	A-6
IRW-37	3.5	25.1	38	19	19	84	A-6
IRW-37	25.0	13.5	NP	NP	NP	19	A-2-4
IRW-37	40.0	26.9	58	27	31	97	A-7-5
IRW-39	5.0	16.5	26	21	5	86	A-4
IRW-39A	5.0	20.8	30	20	10	79	A-4
IRW-40	7.5	10.0	43	23	20	95	A-7-5
IRW-40	15.0	21.9	47	22	25	93	A-7-5
IRW-41	3.0	12.1	31	17	14	99	A-6
IRW-41	9.0	12.6	21	16	5	38	A-4
IRW-41	44.0	24.0	43	23	20	99	A-7-5
IRW-42	12.0	15.0	24	18	6	56	A-4
IRW-42	25.0	21.5	42	22	20	92	A-7-5
IRW-43	3.0	9.7	NP	NP	NP	18	A-2-4
IRW-43	12.0	23.5	48	22	26	88	A-7-5
IRW-43	33.0	22.0	NP	NP	NP	32	A-2-4
IRW-43	45.0	26.2	62	29	33	99	A-7-5
IRW-44	7.5	15.1	25	13	12	46	A-6
IRW-44	10.0	11.9	22	20	2	32	A-2-4
IRW-44	17.5	25.5	28	18	10	75	A-4
IRW-45	6.0	12.1	21	20	1	14	A-2-4
IRW-45	25.0	23.4	47	23	24	98	A-7-5
IRW-46	5.0	14.3	37	20	17	51	A-6
IRW-46	17.0	20.4	54	24	30	96	A-7-5
IRW-46	32.5	15.7	NP	NP	NP	12	A-2-4
IRW-46	40.0	17.7	23	19	4	81	A-4
IRW-47A	0.0	9.5	25	16	9	45	A-4
IRW-47A	9.0	25.4	36	19	17	92	A-6
IRW-47A	24.0	28.0	52	28	24	99	A-7-5
IRW-47A	48.0	15.5	NP	NP	NP	8	A-1-b
IRW-48	12.0	22.1	35	20	15	88	A-6
IRW-48	33.0	12.3	26	15	11	62	A-6
IRW-49	32.5	15.5	34	19	15	96	A-6
IRW-49	35.0	20.3	35	21	14	94	A-6
IRW-49	37.5	20.2	47	22	25	94	A-7-5
IRW-49	40.0	20.6	44	19	25	95	A-7-5
IRW-50	15.0	22.6	57	24	33	96	A-7-5
IRW-53	5.0	14.3	24	16	8	43	A-4
IRW-53	48.5	18.8	NP	NP	NP	57	A-4
IRW-60	5.0	17.4	44	24	20	96	A-7-5
IRW-60	12.5	18.4	47	24	23	99	A-7-5
IRW-60	20.0	14.7	24	18	6	64	A-4
IRW-60	40.0	16.1	29	19	10	99	A-4
IRW-61	12.5	25.5	34	19	15	70	A-6
IRW-61	30.0	13.9	30	19	11	99	A-6
IRW-61	37.5	15.8	27	17	10	96	A-4
IRW-63	2.5	16.2	28	19	9	52	A-4
IRW-63	25.0	19.1	34	23	11	98	A-6
IRW-63	35.0	18.4	44	24	20	88	A-7-5

SUMMARY OF INDEX TEST RESULTS

BORING NO.	TOP SAMPLE DEPTH (FT)	NATURAL MOISTURE CONTENT (%)	LL	PL	PI	PERCENT PASSING NO. 200	AASHTO
IRW-64	5.0	12.5	24	18	6	44	A-4
IRW-64	17.5	16.9	28	17	11	78	A-6
IRW-64	30.0	24.9	32	19	13	78	A-6
IRW-68	12.0	18.9	23	14	9	66	A-4
IRW-68	21.0	25.2	NP	NP	NP	23	A-2-4
IRW-68	36.0	22.2	42	19	23	99	A-7-5
IRW-69	3.0	20.8	29	19	10	97	A-4
IRW-69	12.0	27.5	NP	NP	NP	17	A-2-4
IRW-69	33.0	21.4	52	21	31	99	A-7-5
IRW-70	6.0	9.1	NP	NP	NP	14	A-1-b
IRW-70	21.0	22.0	NP	NP	NP	30	A-2-4
IRW-70	39.0	25.7	NP	NP	NP	26	A-2-4
IRW-71	6.0	10.8	NP	NP	NP	16	A-2-4
IRW-71	39.0	18.3	24	16	8	77	A-8
IRW-72	0.0	16.0	33	20	13	97	A-6
IRW-72	12.0	7.4	NP	NP	NP	11	A-1-b
IRW-72	24.0	18.6	25	15	10	60	A-4
IRW-72	33.0	19.2	22	17	5	63	A-4
IRW-73	3.0	12.7	25	18	7	31	A-2-4
IRW-73	12.0	8.3	NP	NP	NP	12	A-1-b
IRW-73	30.0	21.9	23	15	8	62	A-4
IRW-73	48.5	20.5	40	20	20	99	A-6
IRW-74	3.0	22.3	30	22	8	95	A-4
IRW-74	18.5	16.2	18	16	2	16	A-2-4
IRW-74	43.5	23.0	49	21	28	90	A-7-5
IRW-75	3.0	11.1	22	15	7	34	A-2-4
IRW-75	12.0	28.3	52	25	27	96	A-7-5
IRW-75	36.0	24.0	50	23	27	98	A-7-5
IRW-76	5.0	13.6	18	16	2	26	A-2-4
IRW-76	15.0	27.6	28	21	7	12	A-2-4
IRW-76	27.5	33.8	56	25	31	97	A-7-5
IRW-76	32.5	31.1	57	28	29	99	A-7-5
IRW-76	48.5	20.7	47	24	23	98	A-7-5
IRW-77	3.0	17.1	35	20	15	97	A-6
IRW-77	9.0	19.0	44	22	22	98	A-7-5
IRW-77	27.0	28.5	57	27	30	97	A-7-5
IRW-77	39.0	22.7	33	16	17	93	A-6
IRW-77	45.0	22.0	49	23	26	99	A-7-5
IRW-77	48.5	26.0	53	24	29	98	A-7-5
IRW-78	7.5	23.5	33	19	14	71	A-6
IRW-78	12.5	12.4	NP	NP	NP	24	A-2-4
IRW-78	35.0	19.8	49	28	21	97	A-7-5
IRW-79	0.0	14.8	25	17	8	84	A-4
IRW-79	21.0	28.5	45	22	23	94	A-7-5
IRW-79	39.0	19.9	43	22	21	97	A-7-5
IRW-80	12.0	24.4	33	19	14	39	A-6
IRW-80	21.0	21.3	NP	NP	NP	42	A-4
IRW-80	33.0	23.4	NP	NP	NP	50	A-4
IRW-80	45.0	26.8	57	23	34	98	A-7-5
IRW-81	7.5	17.8	NP	NP	NP	28	A-2-4
IRW-81	12.5	17.4	20	17	3	16	A-2-4
IRW-81	20.0	18.2	22	16	6	75	A-4
IRW-81	42.5	20.6	48	25	23	85	A-7-5
IRW-83	6.0	19.4	26	17	9	72	A-4
IRW-83	18.0	19.1	30	20	10	89	A-4
IRW-83	27.0	21.9	47	23	24	93	A-7-5
IRW-85	0.0	11.0	19	15	4	25	A-2-4
IRW-85	18.0	9.8	NP	NP	NP	16	A-1-b
IRW-85	51.0	23.6	45	20	25	83	A-7-5
IRW-86	0.5	14.2	28	19	9	53	A-4
IRW-86	2.0	17.0	25	17	8	45	A-4
IRW-86	4.0	13.9	28	19	9	37	A-4
IRW-86	6.0	12.0	40	22	18	25	A-2-6
IRW-86	8.0	14.6	22	16	6	50	A-4
IRW-86	10.0	16.7	29	19	10	63	A-4
IRW-86	12.0	13.6	25	17	8	45	A-4
IRW-86	14.0	11.8	41	17	14		
IRW-86	16.0	12.0	NP	NP	NP	16	A-1-b
IRW-86	18.0	12.8	21	15	6	23	A-1-b
IRW-86	24.0	23.4	46	25	21	96	A-7-6

SUMMARY OF INDEX TEST RESULTS

BORING NO.	TOP SAMPLE DEPTH (FT)	NATURAL MOISTURE CONTENT (%)	LL	PL	PI	PERCENT PASSING NO. 200	AASHTO
IRW-86	29.0	20.2	28	19	9	91	A-4
IRW-86	34.0	17.1	24	18	6	79	A-4
IRW-86	39.0	18.6	26	19	7	95	A-4
IRW-86	44.0	20.4	31	20	11	98	A-4
IRW-86	49.0	23.0	29	22	7	93	A-4
IRW-86	54.0	24.5	20	NP	NP	58	A-4
IRW-86	59.0	23.8	21	NP	NP	74	A-4
IRW-87	0.5	2.9	21	NP	NP	-	-
IRW-87	1.0	5.4	17	NP	NP	-	-
IRW-87	3.0	10.4	21	17	4	35	A-2-4(0)
IRW-87	4.0	8.2	22	17	5	29	A-2-4(0)
IRW-87	6.0	16.8	28	20	8	81	A-4(5)
IRW-87	7.0	9.4	19	NP	NP	24	A-2-4(0)
IRW-87	8.0	18.6	30	20	10	85	A-4(8)
IRW-87	10.0	19.3	27	20	6	85	A-4(5)
IRW-87	12.0	9.1	25	17	8	-	-
IRW-87	15.3	15.7	32	19	13	80	A-6(9)
IRW-87	16.0	13.1	18	NP	NP	20	A-1-b
IRW-87	17.0	17.3	37	20	18	68	A-6(10)
IRW-87	18.0	19.2	41	20	21	95	A-7-6(20)
IRW-87	24.0	28.9	53	27	26	96	A-7-6(29)
IRW-87	29.0	22.5	39	20	19	96	A-6(19)
IRW-87	34.0	19.4	24	19	4	74	A-4(2)
IRW-87	39.0	12.4	21	NP	NP	90	A-4(0)
IRW-87	44.0	21.2	32	22	11	99	A-4(10)
IRW-87	49.0	24.6	34	25	9	98	A-4(10)
IRW-87	54.0	48.6	28	22	6	64	A-4(2)
IRW-87	59.0	25.1	25	NP	NP	82	A-4(0)
IRW-88	0.5	6.7	NV	NP	NP	17	A-2-4
IRW-88	2.0	10.2	24	17	7	34	A-2-4
IRW-88	4.0	13.6	22	NP	NP	65	A-4(0)
IRW-88	6.0	13.0	26	18	8	51	A-4(1)
IRW-88	8.0	15.1	35	22	13	58	A-6(5)
IRW-88	10.0	20.9	55	26	29	90	A-7-6(29)
IRW-88	14.0	17.9	37	23	14	96	A-6(15)
IRW-88	16.0	20.7	35	22	13	96	A-6(13)
IRW-88	18.0	19.4	44	24	19	93	A-7-6(21)
IRW-88	24.0	20.7	28	18	10	81	A-4(6)
IRW-88	29.0	29.2	24	NP	NP	61	A-4(0)
IRW-88	34.0	21.4	36	23	13	95	A-6(13)
IRW-88	39.0	20.3	37	22	15	98	A-6(16)
IRW-88	44.0	23.0	29	20	9	82	A-4(6)
IRW-88	49.0	22.4	27	20	7	75	A-4(4)
IRW-88	54.0	23.5	29	19	10	78	A-4(6)
IRW-88	59.0	23.5	24	NP	NP	54	A-4(0)
IRW-89	1.0	7.6	NV	NP	NP	11	A-1-a
IRW-89	2.5	6.4	NV	NP	NP	13	A-1-b
IRW-89	4.0	8.5	NV	NP	NP	15	A-2-4(0)
IRW-89	6.0	16.1	NV	NP	NP	18	A-2-4(0)
IRW-89	8.0	14.0	NV	NP	NP	12	A-1-b
IRW-89	10.0	26.2	NV	NP	NP	17	A-2-4(0)
IRW-89	12.0	18.2	NV	NP	NP	18	A-2-4(0)
IRW-89	14.0	18.9	24	NP	NP	21	A-1-b
IRW-89	16.0	14.1	16	NP	NP	-	-
IRW-89	18.0	25.9	44	27	17	55	A-7-6(7)
IRW-89	24.0	19.3	30	20	10	98	A-4(9)
IRW-89	29.0	18.0	22	18	4	85	A-4(1)
IRW-89	34.0	17.3	26	18	8	86	A-4(5)
IRW-89	39.0	22.9	43	23	20	93	A-7-6(20)
IRW-89	44.0	32.0	62	30	33	99	A-7-5(38)
IRW-89	49.0	24.2	47	25	23	98	A-7-6(25)
IRW-89	54.0	27.3	26	NP	NP	78	A-4(0)
IRW-89	58.0	28.5	46	28	18	94	A-7-6(20)
IRW-90	2.0	10.9	NV	NP	NP	23	A-2-4
IRW-90	4.0	21.5	NV	NP	NP	21	A-2-4
IRW-90	6.0	18.1	NV	NP	NP	14	A-2-4
IRW-90	8.0	21.4	NV	NP	NP	14	A-2-4
IRW-90	10.0	18.4	NV	NP	NP	10	A-1-b
IRW-90	12.0	20.0	NV	NP	NP	13	A-2-4
IRW-90	14.0	23.2	NV	NP	NP	21	A-2-4

NOTES:

1. LL = LIQUID LIMIT
2. PL = PLASTIC LIMIT
3. PI = PLASTICITY INDEX

8/17/2010 4:22:22 PM
M:\PROJECTS\2003\03059_DELTRNPK\SRIMALL\CADD\3009004\PLANS\BO123_RAMPR1.DGN

DELAWARE DEPARTMENT OF TRANSPORTATION

ADDENDUMS / REVISIONS

NOT TO SCALE

SR1/I-95 INTERCHANGE - CHRISTIANA MALL ROAD BRIDGE

CONTRACT	BRIDGE NO.	1-223
T201009004	DESIGNED BY:	JLT
COUNTY		
NEW CASTLE	CHECKED BY:	EMK

SUMMARY OF LABORATORY DATA

SHEET NO. 162
TOTAL SHTS. 164

SUMMARY OF INDEX TEST RESULTS

BORING NO.	TOP SAMPLE DEPTH (FT)	NATURAL MOISTURE CONTENT (%)	LL	PL	PI	PERCENT PASSING NO. 200	AASHTO
IRW-90	16.0	21.1	NV	NP	NP	21	A-2-4
IRW-90	18.0	17.8	NV	NP	NP	18	A-2-4
IRW-90	19.0	17.5	NV	NP	NP	10	A-1-b
IRW-90	24.0	19.8	24	18	6	78	A-4(3)
IRW-90	29.0	16.4	28	17	11	65	A-6(5)
IRW-90	34.0	21.0	22	17	5	70	A-4(1)
IRW-90	39.0	21.3	22	18	4	67	A-4(0)
IRW-90	40.0	25.2	42	20	22	-	-
IRW-90	43.0	21.3	44	22	22	91	A-7-6(21)
IRW-90	49.0	25.7	50	26	24	94	A-7-6(26)
IRW-90	54.0	30.2	49	28	21	96	A-7-6(24)
IRW-90	58.0	35.4	55	32	23	97	A-7-5(28)
IRW-91	1.5	2.9	NV	NP	NP	7	A-1-a
IRW-91	2.0	9.5	18	NP	NP	37	A-4(0)
IRW-91	4.0	20.1	18	NP	NP	23	A-2-4(0)
IRW-91	6.0	15.8	NV	NP	NP	16	A-1-b
IRW-91	8.0	9.8	19	NP	NP	-	-
IRW-91	10.0	16.2	20	NP	NP	43	A-4(0)
IRW-91	12.0	12.8	21	NP	NP	-	-
IRW-91	14.0	18.1	26	18	8	43	A-4(0)
IRW-91	16.0	23.9	22	18	4	56	A-4(0)
IRW-91	18.0	23.2	23	16	7	53	A-4(1)
IRW-91	24.0	18.5	22	17	6	65	A-4(1)
IRW-91	29.0	25.9	19	NP	NP	30	A-2-4(0)
IRW-91	34.0	23.7	49	21	28	95	A-7-6(29)
IRW-91	39.0	21.5	38	19	18	93	A-6(18)
IRW-91	44.0	30.9	56	25	31	97	A-7-6(35)
IRW-91	49.0	29.2	42	21	21	93	A-7-6(21)
IRW-91	54.0	33.0	50	29	21	98	A-7-6(26)
IRW-91	58.5	32.3	60	31	29	97	A-7-5(34)
IRW-93	2.0	8.3	19	NP	NP	30	A-2-4(0)
IRW-93	4.0	7.0	NV	NP	NP	13	A-1-b
IRW-93	6.0	13.4	NV	NP	NP	13	A-1-b
IRW-93	8.0	14.5	NV	NP	NP	17	A-1-b
IRW-93	10.0	16.9	NV	NP	NP	67	A-4(0)
IRW-93	12.0	19.6	24	17	7	78	A-4(3)
IRW-93	13.0	22.7	NV	NP	NP	27	A-2-4(0)
IRW-93	14.0	16.6	24	16	8	65	A-4(3)
IRW-93	16.0	19.2	46	23	24	85	A-7-6(21)
IRW-93	18.0	21.9	51	25	26	92	A-7-6(27)
IRW-93	20.0	21.7	44	22	22	92	A-7-6(22)
IRW-93	24.0	20.3	40	22	18	89	A-6(17)
IRW-93	29.0	24.1	45	25	20	97	A-7-6(22)
IRW-93	34.0	19.0	37	21	17	94	A-6(16)
IRW-93	39.0	19.1	40	23	18	99	A-6(19)
IRW-93	44.0	23.9	34	25	9	97	A-4(10)
IRW-93	49.0	18.2	30	18	13	84	A-6(9)
IRW-93	54.0	20.5	24	18	5	81	A-4(3)
IRW-93	58.0	24.5	21	NP	NP	72	A-4(0)
IRW-95	0.0	11.6	22	18	4	31	A-2-4(0)
IRW-95	2.0	12.5	19	NP	NP	29	A-2-4(0)
IRW-95	3.0	21.1	29	19	10	68	A-4(5)
IRW-95	4.0	14.5	NV	NP	NP	20	A-2-4(0)
IRW-95	6.0	11.9	NV	NP	NP	15	A-2-4(0)
IRW-95	8.0	16.8	NV	NP	NP	14	A-2-4(0)
IRW-95	10.0	17.1	NV	NP	NP	16	A-1-b
IRW-95	12.0	19.5	NV	NP	NP	18	A-1-b
IRW-95	14.0	15.2	NV	NP	NP	14	A-1-b
IRW-95	16.0	16.7	NV	NP	NP	14	A-1-b
IRW-95	18.0	20.4	NV	NP	NP	19	A-2-4(0)
IRW-95	24.0	24.9	55	26	29	100	A-7-6(34)
IRW-95	29.0	22.7	46	22	24	99	A-7-6(26)
IRW-95	34.0	18.3	39	20	19	96	A-6(19)
IRW-95	39.0	20.8	32	19	13	89	A-6(11)
IRW-95	44.0	18.5	30	19	10	91	A-6(9)
IRW-95	49.0	29.7	51	29	22	98	A-7-6(26)
IRW-95	54.0	31.2	53	30	23	97	A-7-5(27)
IRW-95	58.0	28.8	42	30	12	98	A-7-5(15)
IRW-96	0.5	7.2	NV	NP	NP	16	A-1-b
IRW-96	2.0	20.9	52	25	27	84	A-7-6(24)

SUMMARY OF INDEX TEST RESULTS

BORING NO.	TOP SAMPLE DEPTH (FT)	NATURAL MOISTURE CONTENT (%)	LL	PL	PI	PERCENT PASSING NO. 200	AASHTO
IRW-96	4.0	21.6	53	28	25	98	A-7-6(29)
IRW-96	6.0	19.3	47	25	22	97	A-7-6(25)
IRW-96	8.0	16.5	39	21	19	88	A-6(17)
IRW-96	10.0	18.3	35	22	13	89	A-6(12)
IRW-96	12.0	18.9	30	22	8	80	A-4(5)
IRW-96	14.0	19.7	26	22	5	92	A-4(3)
IRW-96	16.0	19.9	26	21	5	91	A-4(3)
IRW-96	18.0	17.1	26	19	7	85	A-4(4)
IRW-96	24.0	32.8	35	24	12	81	A-6(9)
IRW-96	29.0	18.8	25	19	6	69	A-4(2)
IRW-96	34.0	21.4	21	NP	NP	54	A-4(0)
IRW-96	39.0	21.3	34	24	10	99	A-4(11)
IRW-96	44.0	20.5	25	19	6	68	A-4(2)
IRW-96	49.0	23.6	22	NP	NP	55	A-4(0)
IRW-96	54.0	19.2	27	17	11	47	A-6(2)
IRW-96	59.0	26.6	50	27	23	94	A-7-6(25)
IRW-97	0.0	13.5	18	NP	NP	32	A-2-4
IRW-97	2.0	8.5	18	NP	NP	17	A-1-b
IRW-97	4.0	21.3	37	22	15	86	A-6(14)
IRW-97	6.0	19.9	37	22	16	77	A-6(11)
IRW-97	8.0	23.8	44	26	18	88	A-7-6(18)
IRW-97	10.0	28.4	58	30	28	95	A-7-5(32)
IRW-97	12.0	25.8	48	26	22	96	A-7-6(24)
IRW-97	14.0	24.0	46	25	21	98	A-7-6(24)
IRW-97	18.0	19.8	34	22	13	98	A-6(12)
IRW-97	24.0	19.8	27	19	8	98	A-4(7)
IRW-97	29.0	35.4	29	23	5.4	77	A-4(4)
IRW-97	34.0	16.1	23	20	3	62	A-4(0)
IRW-97	39.0	16.7	31	18	13	90	A-6(11)
IRW-97	43.0	23.3	40	20	20	77	A-6(15)
IRW-97	49.0	30.5	46	33	14	98	A-7-5(17)
IRW-97	54.0	22.5	21	NP	NP	68	A-4(0)
IRW-97	58.0	23.0	14.2	NP	NP	35	A-2-4
ISC-01	12.5	16.5	27	16	11	69	A-6
ISC-02	18.5	22.2	38	24	14	96	A-6
ISC-03	10.0	19.2	28	17	11	91	A-6
ISC-03	15.0	21.9	21	17	4	76	A-4
ISC-04	5.0	18.2	25	19	6	77	A-4
ISC-04	12.5	18.2	40	22	18	81	A-6
ISC-06	15.0	30.0	56	30	26	96	A-7-5
ISC-06	18.5	22.1	33	23	10	92	A-4
ISC-09	10.0	14.3	27	18	9	65	A-4
ISC-09	18.0	9.4	NP	NP	NP	24	A-2-4
ISC-103	6.0	18.5	45	23	22	89	A-7-5
ISC-103	21.0	17.6	NP	NP	NP	34	A-2-4
ISC-103	30.0	16.4	29	19	10	92	A-4
ISC-103A	0.0	16.9	35	15	20	62	A-6
ISC-103A	6.0	12.2	27	13	14	52	A-6
ISC-103A	27.0	28.5	58	28	30	99	A-7-5
ISC-103A	39.0	19.2	22	16	6	74	A-4
ISC-11	0.0	13.8	26	16	10	68	A-4
ISC-11	5.0	16.1	26	20	6	66	A-4
ISC-11	24.0	23.5	48	26	22	99	A-7-5
ISC-11	36.0	25.8	46	22	24	90	A-7-5
ISC-116	3.0	19.8	38	19	19	71	A-6
ISC-116	30.0	22.3	35	19	16	73	A-6
ISC-117	21.0	22.6	42	21	21	61	A-7-5
ISC-117	42.0	15.4	25	18	7	73	A-4
ISC-118	28.5	21.6	38	21	17	87	A-6
ISC-119	38.5	16.8	35	18	17	85	A-6
ISC-12	0.0	12.7	24	16	8	55	A-4
ISC-12	3.0	15.1	27	16	11	73	A-6
ISC-12	5.0	15.6	27	17	10	46	A-4
ISC-12	15.0	19.7	45	27	18	92	A-7-5
ISC-12	27.0	18.8	NP	NP	NP	31	A-2-4
ISC-12	36.0	15.5	32	20	12	51	A-6
ISC-13	3.0	17.9	40	25	15	63	A-6
ISC-13	15.0	23.7	NP	NP	NP	42	A-4
ISC-13	24.0	29.1	65	31	34	97	A-7-6
ISC-13	36.0	20.1	NP	NP	NP	24	A-2-4

SUMMARY OF INDEX TEST RESULTS

BORING NO.	TOP SAMPLE DEPTH (FT)	NATURAL MOISTURE CONTENT (%)	LL	PL	PI	PERCENT PASSING NO. 200	AASHTO
ISC-14	2.0	14.7	24	14	10	38	A-4
ISC-14	3.0	12.1	24	16	8	45	A-4
ISC-14	33.0	14.8	26	18	8	83	A-4
ISC-15	7.5	16.0	36	21	15	96	A-6
ISC-19	9.0	16.4	34	19	15	66	A-6
ISC-19	18.5	15.4	21	15	6	56	A-4
ISC-20	6.0	19.6	42	22	20	84	A-7-5
ISC-21	6.0	22.3	24	19	5	90	A-4
ISC-21	23.5	22.1	41	22	19	97	A-7-5
ISC-21	28.5	19.7	37	20	17	76	A-6
ISC-23	6.0	16.8	43	23	20	94	A-7-5
ISC-23	29.5	25.9	23	16	7	50	A-4
ISC-24	6.0	16.9	40	22	18	89	A-6
ISC-24	21.0	18.1	24	18	6	64	A-4
ISC-24	30.0	32.8	63	30	33	96	A-7-5
ISC-24	39.0	19.1	23	19	4	79	A-4
ISC-24A	2.0	10.0	24	15	9	37	A-4
ISC-24A	4.5	8.3	18	15	3	28	A-2-4
ISC-24A	15.0	17.6	24	16	8	71	A-4
ISC-24A	20.0	21.8	37	21	16	70	A-6
ISC-24A	30.0	16.4	38	19	19	94	A-6
ISC-24A	38.5	24.2	52	27	25	96	A-7-5
ISC-25	15.0	18.0	26	18	8	74	A-4
ISC-25	30.0	23.8	29	19	10	72	A-4
ISC-26	0.0	16.0	24	19	5	66	A-4
ISC-26	20.0	13.9	22	16	6	47	A-4
ISC-26	30.0	17.4	35	20	15	98	A-6
ISC-29	3.0	16.4	NP	NP	NP	66	A-4
ISC-29	18.0	19.2	34	20	14	86	A-6
ISC-29	30.0	17.3	25	16	9	78	A-4
ISC-31	4.5	21.4	40	20	20	91	A-6
ISC-31	35.0	13.7	24	16	8	77	A-4
ISC-32	6.0	14.1	27	16	11	90	A-6
ISC-33	6.0	5.6	NP	NP	NP	13	A-1-b
ISC-33	15.0	17.3	40	21	19	100	A-6
ISC-33	30.0	19.5	29	18	11	90	A-6
ISC-35	1.0	7.7	NP	NP	NP	39	A-4
ISC-35	15.0	20.3	48	25	23	98	A-7-5
ISC-35	22.5	23.2	39	22	17	93	A-6
ISC-35	32.5	13.2	NP	NP	NP	38	A-4
ISC-36	5.0	13.0	27	16	11	-	A-6
ISC-36	6.5	11.4	25	17	8	64	A-4
ISC-36	20.0	3.3	25	19	6	90	A-4
ISC-36	35.0	17.2	41	23	18	93	A-7-5
ISC-37	2.5	13.4	23	15	8	42	A-4
ISC-37	10.0	20.0	26	19	7	97	A-4
ISC-37	30.0	16.0	44	20	24	80	A-7-5
ISC-37	38.5	16.3	36	20	16	93	A-6
ISC-40	5.0	21.1	25	18	7	-	A-4
ISC-40	10.0	22.3	47	21	26	-	A-7-5
ISC-41	0.0	22.7	42	24	18	84	A-7-5
ISC-41	5.0	14.5	25	17	8	71	A-4
ISC-41	27.5	21.4	52	24	28	90	A-7-5
ISC-42	0.0	20.4	27	19	8	70	A-4
ISC-42	5.0	19.2	NP	NP	NP	51	A-4
ISC-42	7.5	17.2	20	18	2	60	A-4
ISC-42	25.0	24.5	53	22	31	90	A-7-5
ISC-43	4.0	16.5	22	15	7	46	A-4
ISC-43	7.5	14.2	24	16	8	51	A-4
ISC-43	15.0	17.5	41	23	18	82	A-7-5
ISC-43	27.5	23.1	44	23	21	99	A-7-5
ISC-44	7.5	16.1	26	17	9	-	A-4
ISC-44	15.0	17.0	51	22	29	95	A-7-5
ISC-44	22.5	22.1	52	28	24	99	A-7-5
ISC-44	30.0	20.6	NP	NP	NP	11	A-2-4
ISC-44	38.5	18.3	35	21	14	94	A-6
ISC-49	1.0	15.8	32	18	14	57	A-6
ISC-49	12.5	17.9	26	15	11	50	A-6
ISC-49	27.5	21.8	45	23	22	88	A-7-5
ISC-50	7.5	19.9	25	19	6	75	A-4

NOTES:

1. LL = LIQUID LIMIT
2. PL = PLASTIC LIMIT
3. PI = PLASTICITY INDEX

8/17/2010 4:26:26 PM
M:\PROJECTS\2003\03059_DELTRNPK\SRIMALL\CADD\3009004\PLANS\BO124_RAMPR1.DGN

DELAWARE DEPARTMENT OF TRANSPORTATION

ADDENDUMS / REVISIONS

NOT TO SCALE

SR1/I-95 INTERCHANGE - CHRISTIANA MALL ROAD BRIDGE

CONTRACT	BRIDGE NO.	1-223
T201009004	DESIGNED BY:	JLT
COUNTY		
NEW CASTLE	CHECKED BY:	EMK

SUMMARY OF LABORATORY DATA

SHEET NO. 163
TOTAL SHTS. 164

SUMMARY OF INDEX TEST RESULTS

BORING NO.	TOP SAMPLE DEPTH (FT)	NATURAL MOISTURE CONTENT (%)	LL	PL	PI	PERCENT PASSING NO. 200	AASHTO
ML-77	75.0	18.4	33	20	13	72	A-6
ML-80	9.0	16.2	38	19	19	92	A-6
ML-80	12.0	19.6	50	24	26	92	A-7-5
ML-80	21.0	28.3	58	29	29	92	A-7-5
ML-80	33.0	23.9	44	28	16	93	A-7-5
ML-80	45.0	12.8	26	16	10	64	A-4
ML-85	9.5	20.5	19	19	NP	87	A-6
ML-85	20.0	19.2	25	16	9	69	A-4
ML-86	3.0	16.3	22	17	5	64	A-4
ML-86	7.5	18.7	38	19	19	53	A-6
ML-86	15.0	14.3	32	16	16	88	A-6
ML-86	18.0	19.9	41	20	21	98	A-6
ML-86	27.0	17.4	35	16	19	99	A-6
ML-86	30.0	28.0	NP	NP	NP	8	A-2-4
ML-86	51.0	27.1	44	24	20	91	A-7-5
ML-87	12.0	20.5	20	16	4	55	A-4
ML-87	30.0	21.7	32	18	14	75	A-6
ML-87	36.5	26.9	29	18	11	55	A-6
ML-89	27.0	20.7	32	20	12	82	A-6
ML-89	42.0	16.7	25	14	11	69	A-6
ML-89	51.0	16.8	27	17	10	71	A-4
ML-90	2.5	18.3	30	20	10	77	A-4
ML-90	15.0	19.6	32	17	15	93	A-6
ML-90	30.0	23.1	38	21	17	97	A-6
ML-90	39.0	26.0	28	17	11	95	A-6
ML-91	12.5	20.7	30	17	13	67	A-6
ML-91	23.0	29.8	52	23	29	92	A-7-5
ML-91	36.0	21.5	32	17	15	96	A-6
ML-91	51.0	26.5	59	24	35	100	A-7-5
ML-92	17.5	7.7	22	15	7	27	A-2-4
ML-92	30.0	16.9	NP	NP	NP	9	A-3
ML-92	39.0	37.0	NP	NP	NP	36	A-4
ML-93	17.5	9.9	NP	NP	NP	21	A-2-4
ML-93	27.0	21.4	21	18	3	66	A-4
ML-93	60.0	18.7	35	18	17	96	A-6
MRR-6	1.0	15.9	21	14	7	63	A-4
MRR-8	1.0	17.3	23	14	9	52	A-4
P-05	1.0	15.0	28	10	18	42	A-6
P-05	7.0	16.0	31	21	10	33	A-2-4
P-05	9.0	25.0	44	25	19	89	A-7-6
P-05	14.0	21.0	38	21	17	91	A-6
P-05	19.0	18.0	25	19	6	90	A-4
P-05	24.0	21.0	42	23	19	98	A-7-6
P-05	29.0	19.0	20	-	NP	41	A-4
P-05	34.0	21.0	-	-	NP	24	A-2-4
P-05	39.0	21.0	-	-	NP	10	A-1-b
P-05	44.0	22.0	33	20	13	72	A-6
P-05	49.0	23.0	38	22	16	80	A-6
P-05	54.0	19.0	28	19	9	67	A-4
P-05	59.0	20.0	31	19	12	76	A-6
S-01	3.0	9.0	NP	NP	NP	21	A-1-b
S-01	3.5	14.0	24	19	5	57	A-4 (1)
S-01	8.0	12.0	24	21	3	41	A-4 (0)
S-01	13.0	25.0	40	23	17	89	A-6 (16)
S-01	18.0	34.0	39	27	12	94	A-6 (13)
S-01	28.0	96.0	55	45	10	-	-
S-01	28.8	16.0	NP	NP	NP	18	A-2-4 (0)
S-01	33.0	11.0	NP	NP	NP	8	A-1-a
S-01	38.0	25.0	45	23	22	79	A-7-6 (18)
S-01	43.0	21.0	27	19	8	68	A-4 (3)
S-01	48.0	24.0	39	25	14	81	A-6 (12)
S-01A	8.0	24.0	30	25	5	93	A-4
S-01A	10.0	23.0	26	-	NP	89	A-4
S-01A	11.5	10.0	23	15	8	45	A-4
S-01A	12.0	18.0	29	21	8	78	A-4
S-01A	14.0	21.0	27	23	4	91	A-4
S-01A	19.0	15.0	27	19	8	55	A-4
S-01A	24.0	16.0	39	21	18	54	A-6
S-01A	25.5	24.0	60	27	33	96	A-7-6
S-01A	29.0	18.0	42	24	18	72	A-7-6

SUMMARY OF INDEX TEST RESULTS

BORING NO.	TOP SAMPLE DEPTH (FT)	NATURAL MOISTURE CONTENT (%)	LL	PL	PI	PERCENT PASSING NO. 200	AASHTO
S-01A	30.0	15.0	26	21	5	47	A-4
S-01A	31.0	22.0	25	-	NP	27	A-2-4
S-01A	34.0	29.0	44	28	16	85	A-7-6
S-01B	27.0	28.0	-	-	NP	28	A-2-4
S-02	3.0	21.0	33	24	9	70	A-4 (5)
S-02	8.0	18.0	32	22	10	59	A-4 (4)
S-02	13.0	29.0	41	26	15	95	A-7-6 (16)
S-02	18.0	41.0	42	31	12	92	A-7-5 (14)
S-02	28.0	14.0	NP	NP	NP	10	A-1-b
S-02	33.0	27.0	42	26	16	74	A-7-6 (12)
S-02	38.0	26.0	51	27	24	82	A-7-6 (21)
S-02	43.0	27.0	52	29	23	86	A-7-6 (22)
S-02	43.6	20.0	26	22	4	53	A-4 (0)
S-02	48.0	20.0	NP	NP	NP	13	A-2-4 (0)
S-02	53.0	20.0	31	23	8	72	A-4 (5)
S-02	63.0	20.0	30	21	9	32	A-2-4 (0)
S-02	64.0	17.0	31	18	13	60	A-6 (5)
S-02	68.0	14.0	22	17	5	38	A-4 (0)
S-03	3.0	12.0	22	17	5	43	A-4 (0)
S-03	8.0	10.0	19	16	3	-	-
S-03	8.5	37.0	40	29	11	98	A-6 (13)
S-03	13.0	45.0	49	39	10	98	A-5 (15)
S-03	18.0	73.0	61	53	8	58	A-5 (6)
S-03	23.0	27.0	32	NP	NP	33	A-2-4 (0)
S-03	28.0	20.0	38	24	14	78	A-6 (11)
S-03	33.0	24.0	21	NP	NP	32	A-2-4 (0)
S-03	33.5	21.0	33	23	10	76	A-4 (7)
S-03	38.0	21.0	26	NP	NP	37	A-4 (0)
S-03	43.0	24.0	NP	NP	NP	22	A-2-4 (0)
S-03	48.0	19.0	NP	NP	NP	21	A-2-4 (0)
S-03	53.0	22.0	36	22	14	61	A-6 (7)
S-03	58.0	25.0	27	23	4	52	A-4 (0)
S-03	63.0	20.0	23	18	5	47	A-4 (0)
S-03	68.0	20.0	40	23	17	59	A-6 (8)
S-04	1.0	9.0	21	17	4	28	A-2-4 (0)
S-04	4.5	24.0	33	25	8	91	A-4 (8)
S-04	8.0	25.0	27	22	5	98	A-4 (4)
S-04	14.5	28.0	NP	NP	NP	13	A-2-4 (0)
S-04	19.0	11.0	21	-	-	-	-
S-04	24.0	21.0	39	24	15	64	A-6 (8)
S-04	27.5	33.0	68	37	31	89	A-7-5 (34)
S-04	35.0	25.0	NP	NP	NP	8	A-3
S-04	40.0	29.0	25	-	-	-	-
S-04	40.5	25.0	NP	NP	NP	20	A-2-4 (0)
S-04	45.0	20.0	NP	NP	NP	26	A-2-4 (0)
S-04	45.5	20.0	NP	NP	NP	17	A-2-4 (0)
S-04	50.0	21.0	22	17	5	46	A-4 (0)
S-04	50.8	20.0	24	19	5	42	A-4 (0)
S-04	55.0	18.0	28	18	10	45	A-4 (1)
S-04	60.0	17.0	30	20	10	44	A-4 (1)
S-04	65.0	25.0	40	32	8	59	A-4 (4)
S-04	70.0	28.0	57	28	29	83	A-7-6 (27)
S-04A	0.3	-	28	13	15	58	A-6 (5)
S-04A	1.0	-	28	21	7	58	A-4 (2)
S-04A	2.5	-	27	20	7	36	A-4 (0)
S-04A	3.5	-	30	21	9	77	A-4 (6)
S-04A	5.5	-	25	19	6	39	A-4 (0)
S-04A	6.5	-	41	13	28	91	A-7-6 (25)
SW-01	3.0	30.6	60	31	29	96	A-7-6
SW-01	6.0	13.8	27	16	11	69	A-6
SW-01	12.0	18.6	46	22	24	96	A-7-5
SW-02	0.0	16.9	29	19	10	98	A-4
SW-02	12.0	9.5	35	20	15	59	A-6
SW-03	3.0	23.7	29	19	10	91	A-4
SW-03	6.0	23.3	29	17	12	73	A-6
SW-03	12.0	16.8	23	16	7	64	A-4
SW-03	15.0	16.6	37	20	17	85	A-6
SW-03	18.5	20.8	26	16	10	74	A-4
SW-04	3.0	23.0	26	19	7	93	A-4
SW-04	6.0	17.8	40	19	21	94	A-6

SUMMARY OF INDEX TEST RESULTS

BORING NO.	TOP SAMPLE DEPTH (FT)	NATURAL MOISTURE CONTENT (%)	LL	PL	PI	PERCENT PASSING NO. 200	AASHTO
SW-04	9.0	20.0	44	22	22	82	A-7-5
SW-04	12.0	20.0	35	19	16	94	A-6
SW-04	18.5	26.2	36	19	17	84	A-6
SW-05	3.5	13.3	23	18	5	24	A-2-4
SW-06	3.0	19.2	24	18	6	72	A-4
SW-06	30.0	17.3	30	19	11	85	A-6
SW-06	36.0	6.7	NP	NP	NP	9	A-3
SW-07	6.0	17.3	26	17	9	33	A-2-4
SW-07	36.0	18.1	30	17	13	83	A-6
SWM-01	0.0	17.6	31	20	11	68	A-6(6)
SWM-01	2.0	24.4	37	20	17	89	A-6(15)
SWM-01	4.0	21.1	36	19	17	74	A-6(11)
SWM-01	6.0	14.6	25	16	11	59	A-4(3)
SWM-01	7.0	9.5	19	NP	NP	32	A-2-4(0)
SWM-01	8.0	10.4	NV	NP	NP	21	A-1-b
SWM-01	10.0	10.6	NV	NP	NP	20	A-1-b
SWM-01	12.0	11.3	NV	NP	NP	18	A-2-4(0)
SWM-01	13.0	21.4	47	26	21	94	A-7-6(23)
SWM-01	14.0	21.8	43	24	18	90	A-7-6(18)
SWM-01	16.0	20.6	44	25	19	98	A-7-6(22)
SWM-01	18.0	17.9	35	21	14	91	A-6(13)
SWM-01	20.0	17.4	27	21	6	88	A-4(4)
SWM-01	21.0	15.0	26	20	6	84	A-4(4)
SWM-01	22.0	16.4	25	19	6	89	A-4(4)
SWM-01	23.5	19.4	24	17	7	84	A-4(4)
SWM-02	0.5	10.2	22	NP	NP	47	A-4(0)
SWM-02	2.0	15.8	33	19	14	51	A-6(4)
SWM-02	4.0	22.0	24	NP	NP	89	A-4(0)
SWM-02	6.0	24.3	27	NP	NP	88	A-4(0)
SWM-02	7.0	24.3	26	23	3	91	A-4(2)
SWM-02	8.0	20.4	25	23	2	84	A-4(1)
SWM-02	10.0	23.9	23	NP	NP	78	A-4(0)
SWM-02	12.0	23.1	39	24	16	93	A-6(15)
SWM-02	14.0	22.0	34	23	12	97	A-6(12)
SWM-02	16.0	23.3	42	23	19	96	A-7-6(20)
SWM-02	18.0	21.3	37	24	14	92	A-6(13)
SWM-02	20.0	21.4	35	21	14	94	A-6(13)
SWM-02	22.0	20.4	29	20	8	90	A-4(6)
SWM-02	23.5	24.5	33	22	11	96	A-6(11)
SWM-03	0.5	11.2	26	21	6	69	A-4(2)
SWM-03	2.0	17.1	28	21	7	88	A-4(5)
SWM-03	4.0	17.1	27	21	7	89	A-4(4)
SWM-03	6.0	14.2	26	20	7	52	A-4(1)
SWM-03	8.0	15.4	29	21	8	44	A-4(1)
SWM-03	10.0	20.9	32	22	10	50	A-4(2)
SWM-03	12.0	22.7	31	22	9	54	A-4(3)
SWM-03	14.0	17.5	NV	NP	NP	19	A-2-4(0)
SWM-03	16.0	22.4	NV	NP	NP	13	A-2-4(0)
SWM-03	18.0	18.4	NV	NP	NP	13	A-1-b
SWM-03	20.0	14.0	NV	NP	NP	14	A-1-b
SWM-03	22.0	11.8	NV	NP	NP	15	A-1-b
SWM-03	24.0	21.7	NV	NP	NP	16	A-2-4(0)
URS-1	0.0	12.1	22	20	3	56	A-4(0)
URS-1	2.0	20.2	25	22	3	75	A-4(0)
URS-1	4.0	14.1	21	19	3	47	A-4(0)
URS-1	6.0	14.7	30	17	13	44	A-6(2)
URS-1	8.0	16.4	23	19	4	50	A-4(0)
URS-1	10.0	25.0	47	25	22	97	A-7-6(24)
URS-1	12.0	24.9	44	26	18	99	A-7-6(21)
URS-1	14.0	22.7	39	23	16	100	A-6(18)
URS-1	16.0	21.4	40	23	17	99	A-6(19)
URS-1	18.0	24.0	34	22	12	98	A-6(12)
URS-1	20.0	27.2	40	23	17	88	A-6(16)
URS-1	22.0	28.6	37	22	15	94	A-6(15)
URS-1	26.0	24.0	44	21	23	84	A-7-6(20)
URS-1	28.0	18.3	35	20	15	89	A-6(13)
URS-1	34.0	22.2	28	19	10	84	A-4(6)
URS-1	39.0	21.1	29	19	10	93	A-4(8)
URS-1	44.0	22.0	32	20	12	98	A-6(12)
URS-1	49.0	24.9	23	NP	NP	59	A-4(0)

NOTES:

1. LL = LIQUID LIMIT
2. PL = PLASTIC LIMIT
3. PI = PLASTICITY INDEX

8/17/2010 4:27:22 PM
M:\PROJECTS\2003\03059_DELTRNPK\SRIMALL\CADD\3009004\PLANS\BO126_RAMPR1.DGN

DELAWARE DEPARTMENT OF TRANSPORTATION

ADDENDUMS / REVISIONS

NOT TO SCALE

SR1/I-95 INTERCHANGE - CHRISTIANA MALL ROAD BRIDGE

CONTRACT	BRIDGE NO.	1-223
T201009004	DESIGNED BY:	JLT
COUNTY		
NEW CASTLE	CHECKED BY:	EMK

SUMMARY OF LABORATORY DATA

SHEET NO. 164
TOTAL SHTS. 164