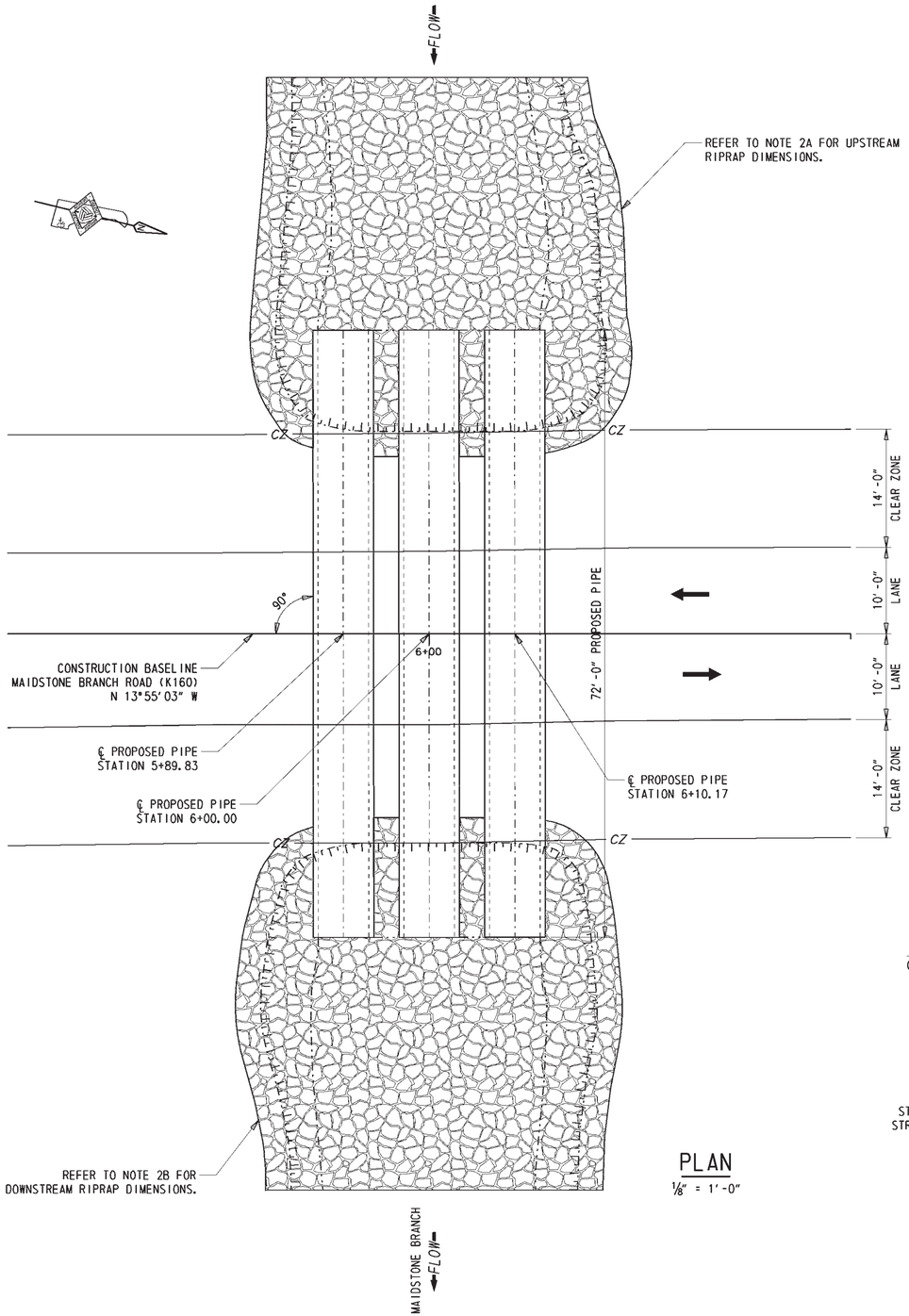

PLAN

1/8" = 1'-0"

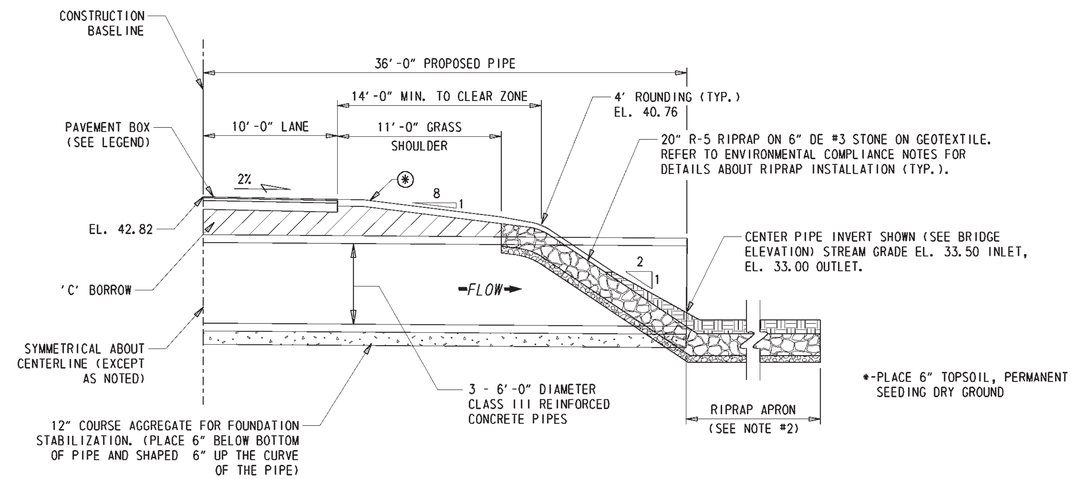

BRIDGE SECTION

1/16" = 1'-0"

NOTE: BRIDGE SECTION SHOWS THE CENTERLINE OF THE CENTER PIPE.

NOTES:

1. PROPOSED BRIDGE
   THE EXISTING (3) 6'-0" DIAMETER CORRUGATED METAL PIPES SHALL BE REPLACED WITH (3) 6'-0" DIAMETER REINFORCED CONCRETE PIPES (72'-0" LONG). THE CENTER PIPE SHALL BE PLACED 6" BELOW THE ESTABLISHED STREAM GRADE. THE INVERT OF THE OUTER PIPES SHALL BE PLACED 1'-0" ABOVE THE INVERT OF THE CENTER PIPE. PLACE PIPES WITH A 3'-0" GAP BETWEEN THE OUTER WALLS OF EACH RUN. PLACE 6" COURSE AGGREGATE BEDDING BENEATH PIPES AND 6" SHAPED UP THE CURVE OF EACH PIPE.
2. RIPRAP PLACEMENT
   A. UPSTREAM - RIPRAP SHALL BE PLACED IN THE CHANNEL BOTTOM 30'-0" FROM THE PIPE INLET ALONG THE STREAM CENTERLINE AND SHALL BE PLACED TO CREATE A SMOOTH BEND THAT MATCHES THE EXISTING STREAM BANKS.
   B. DOWNSTREAM - RIPRAP SHALL BE PLACED IN THE CHANNEL BOTTOM 30'-0" FROM THE PIPE OUTLET ALONG THE STREAM CENTERLINE AND SHALL BE PLACED TO CREATE A SMOOTH BEND THAT MATCHES THE EXISTING STREAM BANKS.

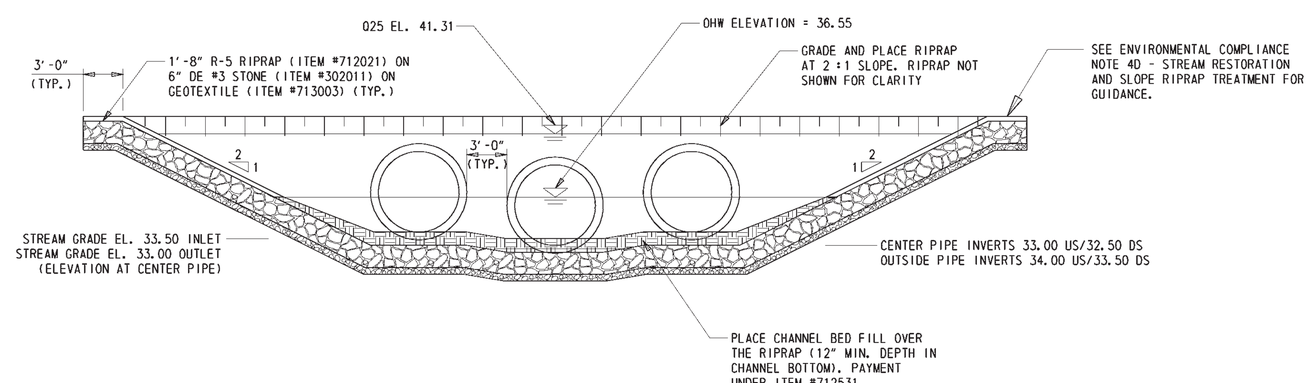

BRIDGE ELEVATION

1/16" = 1'-0"

Y:\KENT\131\BRIDGE\T201207505\PLANS\2-160A\PE01.DGN

DELAWARE DEPARTMENT OF TRANSPORTATION	ADDENDUMS / REVISIONS	SCALE AS NOTED	KENT COUNTY PIPE REPLACEMENTS, FEDERAL, 2012	CONTRACT T201207505	BRIDGE NO. 2-160A	BRIDGE PLAN, SECTION & ELEVATION	SHEET NO. 30
				COUNTY KENT	DESIGNED BY: NED		TOTAL SHTS. 48
					CHECKED BY: MJG		