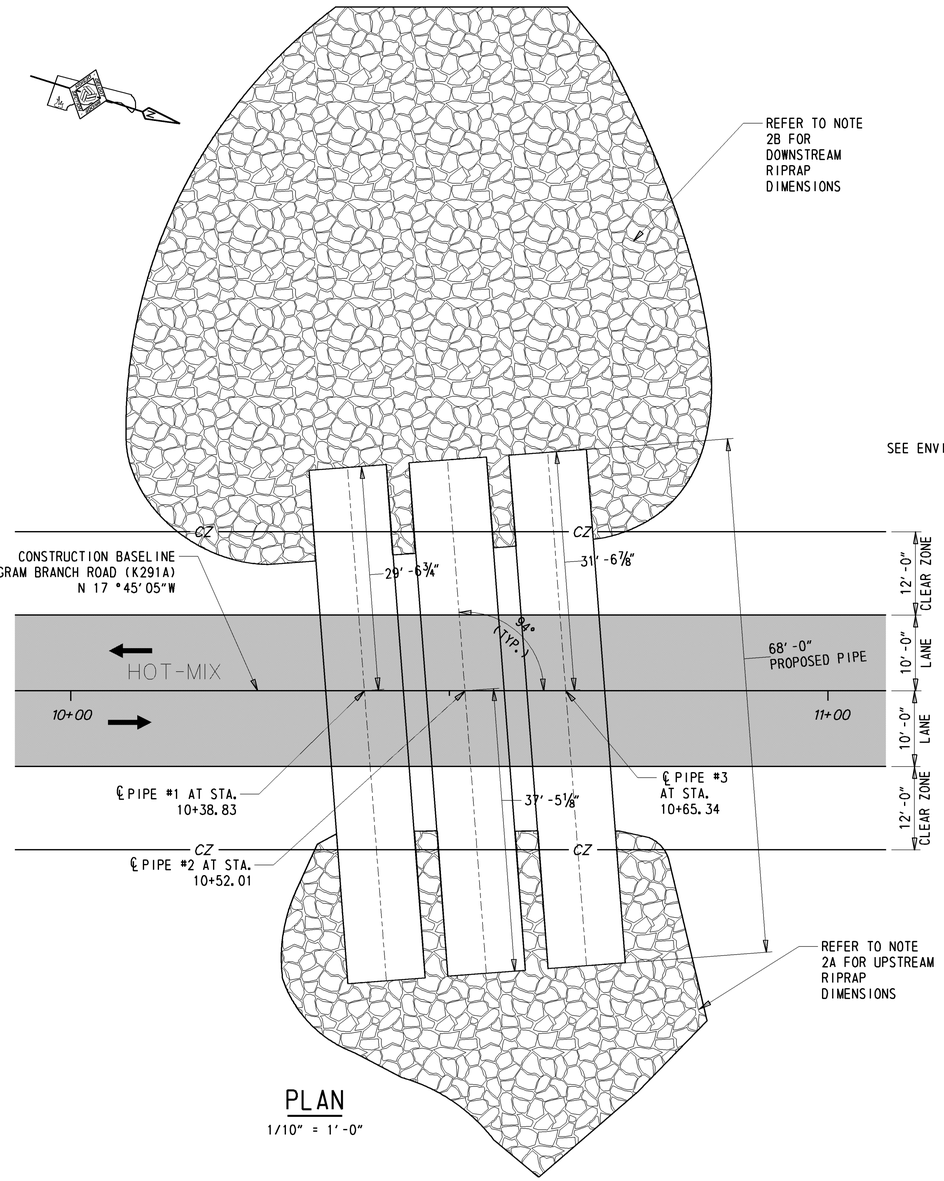

PLAN

1/10" = 1'-0"

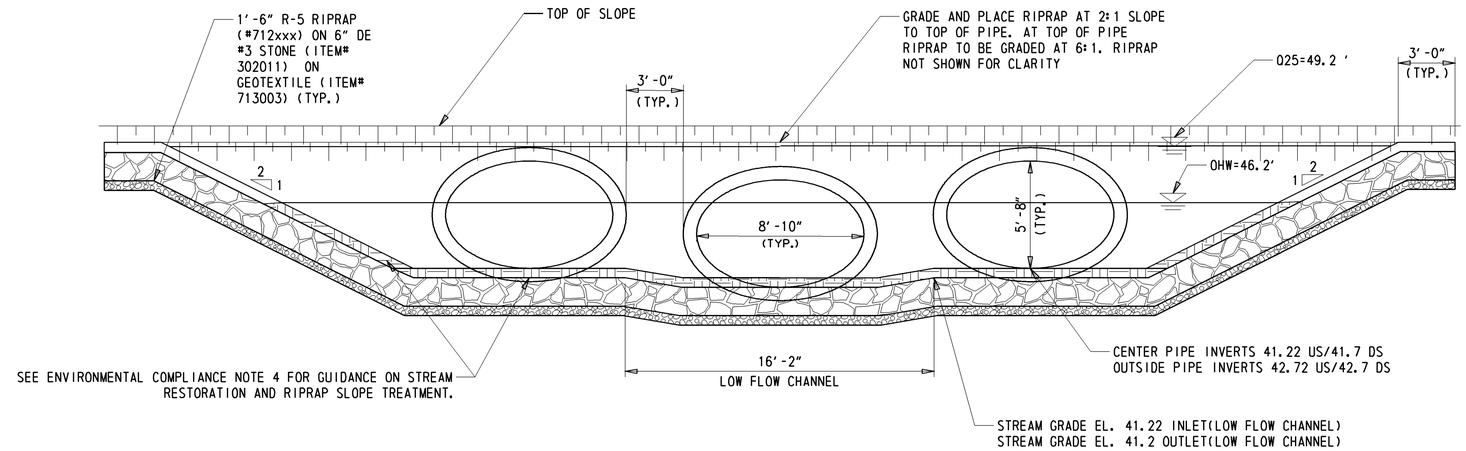

ELEVATION

¼" =1'-0"

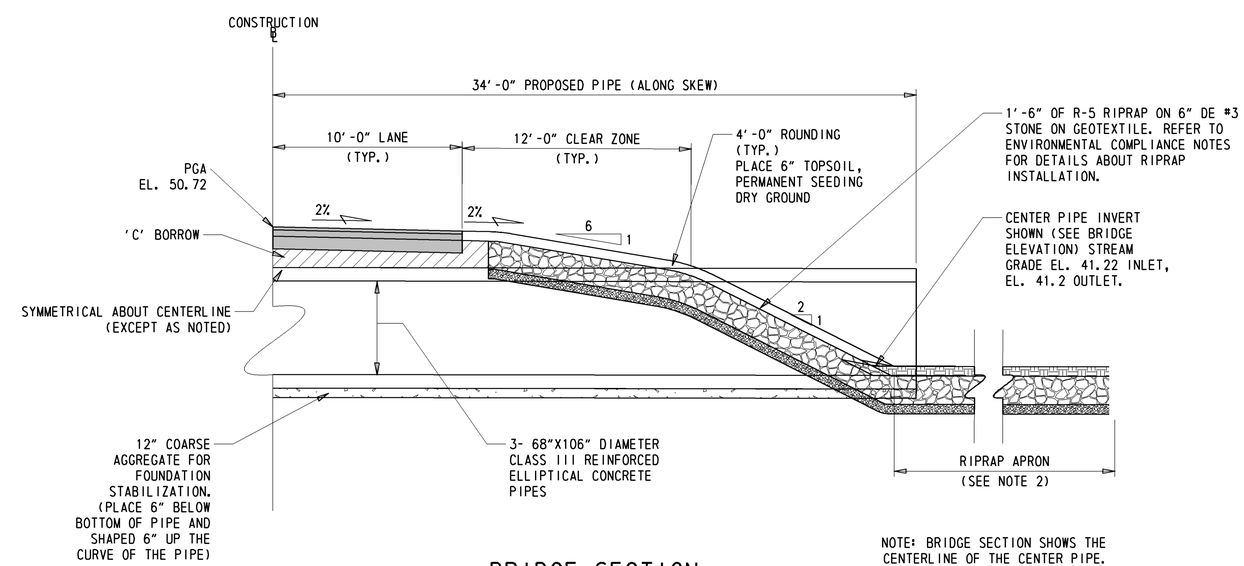

NOTE: BRIDGE SECTION SHOWS THE CENTERLINE OF THE CENTER PIPE.

BRIDGE SECTION

¼" =1-0"

NOTES:

1. PROPOSED PIPES
   THE EXISTING (3) 6'-10" X 5'4" DIA. CORRUGATED METAL ARCH PIPES SHALL BE REPLACED WITH (3) 68"X106" ELLIPTICAL REINFORCED CONCRETE PIPES(68'-0" LONG).
   THE CENTER PIPE SHALL BE PLACED 6" BELOW THE ESTABLISHED STREAM GRADE. THE INVERT OF THE OUTER PIPES SHALL BE PLACED 1'6" ABOVE THE INVERT OF THE CENTER PIPE.
2. RIPRAP PLACEMENT
   A. UPSTREAM-RIPRAP SHALL BE PLACED IN THE CHANNEL BOTTOM 20'-0" FROM THE PIPE INLET ALONG THE STREAM CENTERLINE AND SHALL BE PLACED TO CREATE A SMOOTH BEND THAT MATCHES THE EXISTING STREAM BANK
   B. DOWNSTREAM- RIPRAP SHALL BE PLACED IN THE CHANNEL BOTTOM 28'-0" FROM THE PIPE OUTLET ALONG THE STREAM CENTERLINE AND SHALL BE PLACED TO CREATE A SMOOTH BEND THAT MATCHES THE EXISTING STREAM BANKS.

Y:\KENT\291\BRIDGE\T201407205\PLANS\PE.DGN

DELAWARE DEPARTMENT OF TRANSPORTATION	ADDENDUMS / REVISIONS	SCALE AS NOTED	BR 2-291A ON INGRAM BRANCH ROAD OVER PRINCE PRONG	CONTRACT T201407205	BRIDGE NO. 2-291A	BRIDGE PLAN, SECTION, AND ELEVATION	SHEET NO. 8
				COUNTY KENT	DESIGNED BY: KRK		TOTAL SHTS. 14
					CHECKED BY: KRL		