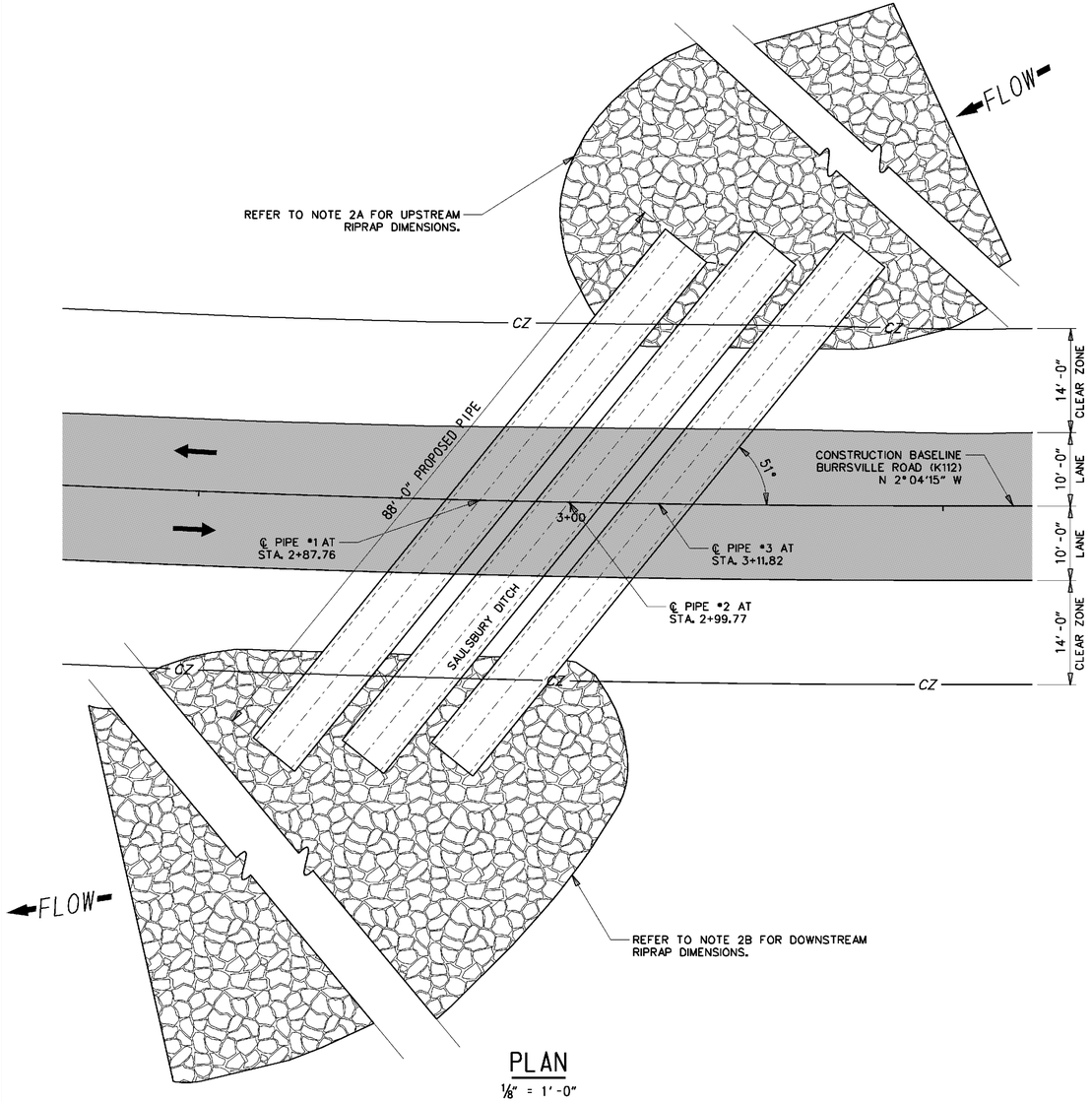

PLAN

1/8" = 1'-0"

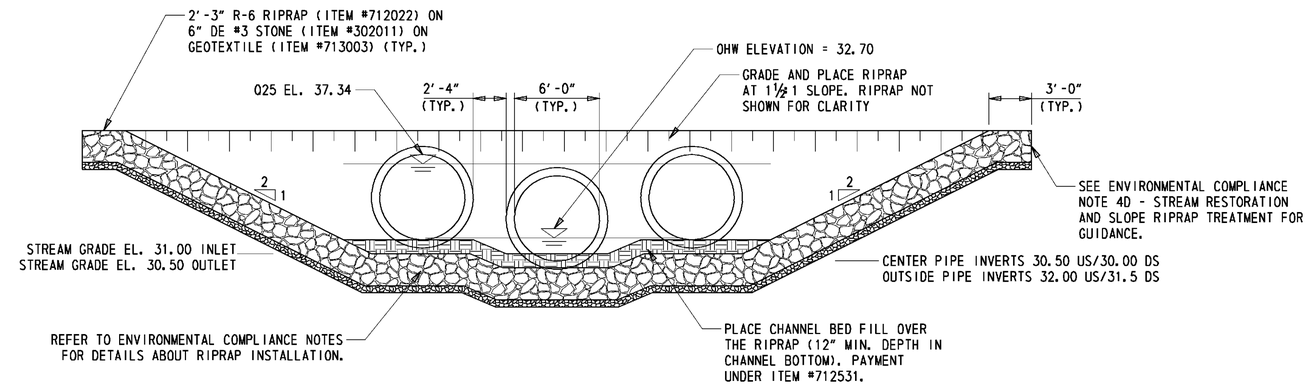

BRIDGE ELEVATION

1/16" = 1'-0"

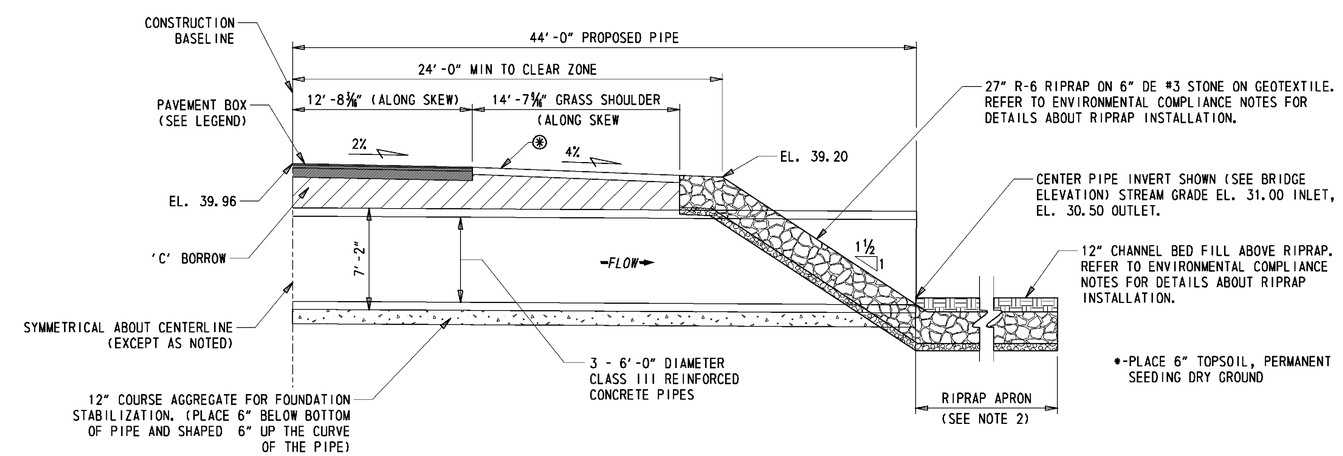

BRIDGE SECTION

1/16" = 1'-0"

NOTES:

1. PROPOSED BRIDGE
   THE EXISTING (3) 5'-6" DIA. CORRUGATED METAL PIPES SHALL BE REPLACED WITH (3) 6'-0" DIA. REINFORCED CONCRETE PIPES (88'-0" LONG). THE CENTER PIPE SHALL BE PLACED 6" BELOW THE ESTABLISHED STREAM GRADE. THE INVERT OF THE OUTER PIPES SHALL BE PLACED 1'-6" ABOVE THE INVERT OF THE CENTER PIPE. PLACE PIPES WITH A MINIMUM 2'-0" GAP AND A MAXIMUM 3'-0" GAP BETWEEN THE OUTER WALLS OF EACH RUN. PLACE 6" COURSE AGGREGATE BEDDING BENEATH PIPES AND 6" SHAPED UP THE CURVE OF EACH PIPE.
2. RIPRAP PLACEMENT
   A. UPSTREAM - RIPRAP SHALL BE PLACED IN THE CHANNEL BOTTOM APPROXIMATELY 46'-0" FROM THE PIPE INLET ALONG THE STREAM CENTERLINE AND SHALL BE PLACED TO CREATE A SMOOTH BEND THAT APPROXIMATELY MATCHES THE EXISTING STREAM BANKS.
   B. DOWNSTREAM - RIPRAP SHALL BE PLACED IN THE CHANNEL BOTTOM APPROXIMATELY 74'-0" FROM THE PIPE INLET ALONG THE STREAM CENTERLINE AND SHALL BE PLACED TO CREATE A SMOOTH BEND THAT APPROXIMATELY MATCHES THE EXISTING STREAM BANKS.

DELAWARE DEPARTMENT OF TRANSPORTATION	ADDENDUMS / REVISIONS	BR 2-112B ON K112 BURRSVILLE ROAD OVER SAULSBURY DITCH	CONTRACT T201107208	BRIDGE NO. 2-112B	BRIDGE PLAN, SECTION & ELEVATION	SHEET NO. 7
			COUNTY KENT	DESIGNED BY: NED		TOTAL SHTS. 15
				CHECKED BY: JKM		

Y:\KENT\112\BRIDGE\T201107208\PLANS\PE01.DGN