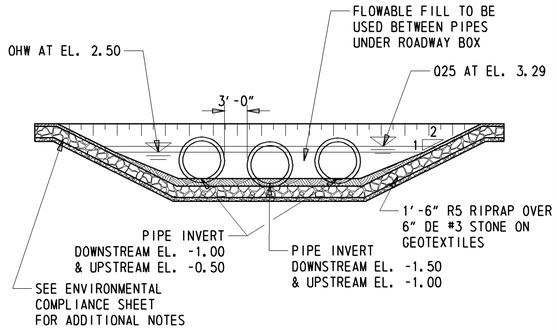

BRIDGE ELEVATION
1" = 10'

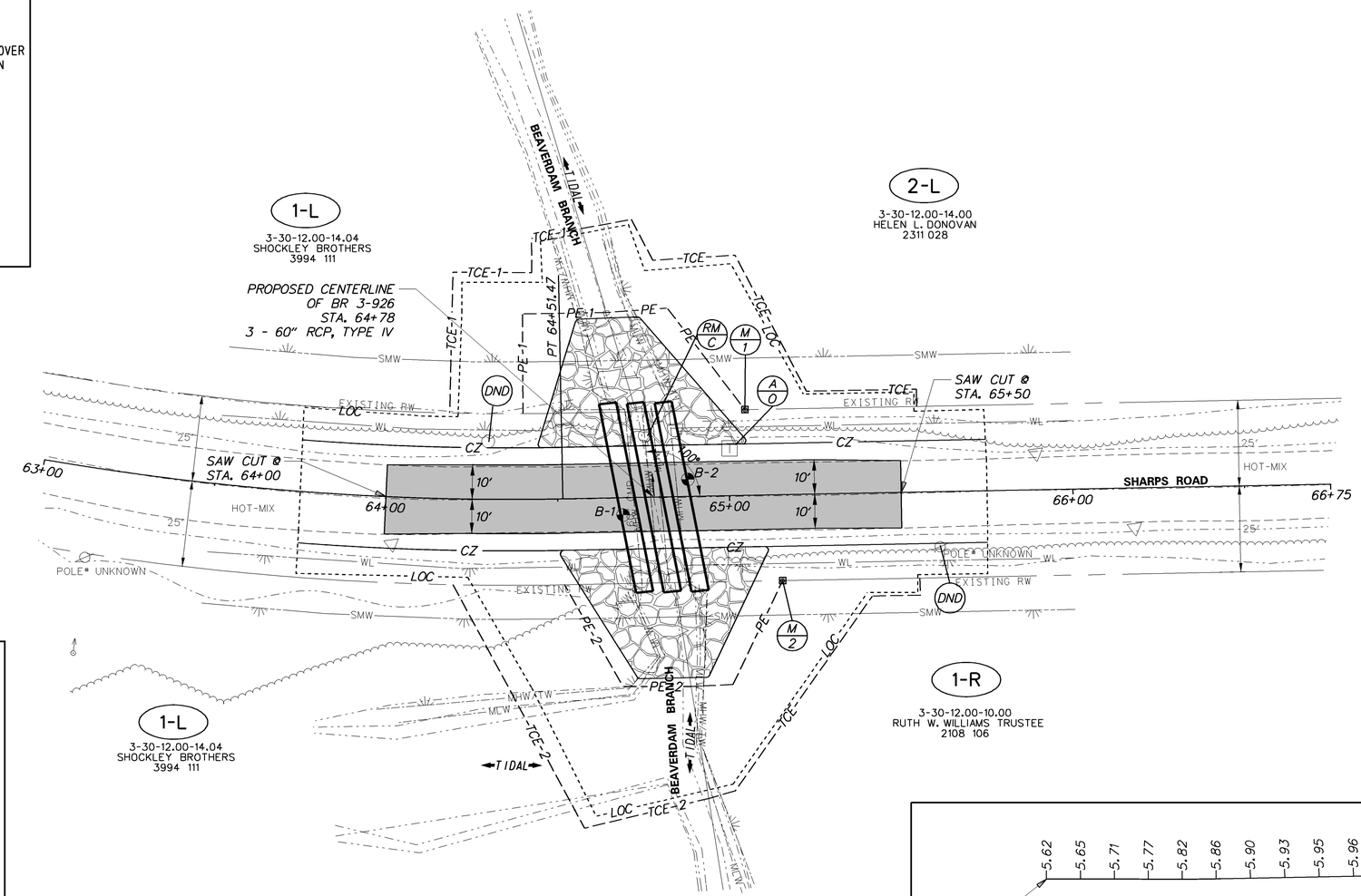

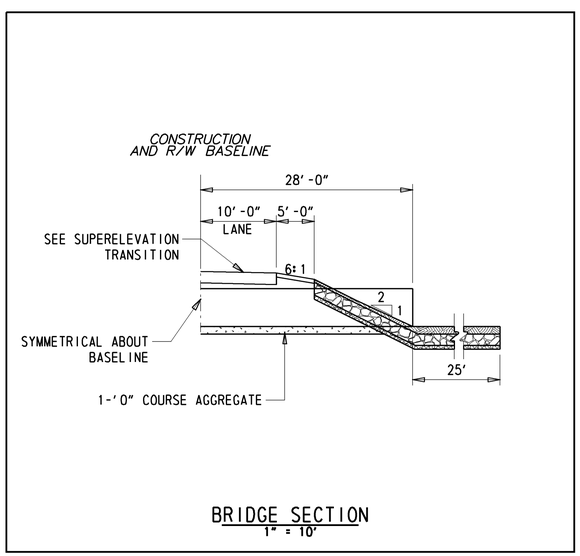

BRIDGE SECTION
1" = 10'

RIGHT-OF-WAY MONUMENT SCHEDULE					
NO.	TYPE	STATION	OFFSET	NORTHING	EASTING
1	CAPPED REBAR	65+05.00	-25.00'	328915.5641	671570.0837
2	CAPPED REBAR	65+15.00	25.00'	328886.7536	671528.0129

ROADWAY CORE SCHEDULE			
NO.	STATION	OFFSET	DESCRIPTION
B-1	64+68.96	5.00'	TBD
B-2	68+88.02	-5.00'	TBD

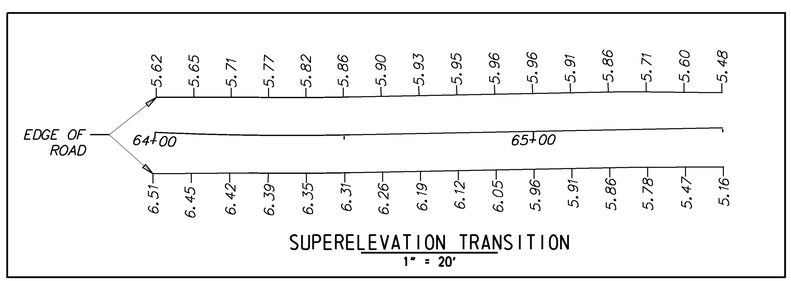

SUPERELEVATION TRANSITION
1" = 20'

Y:\SUSSEX\200\BRIDGE\T201407301\PLANS\CP.DGN

DELAWARE DEPARTMENT OF TRANSPORTATION

ADDENDUMS / REVISIONS

SCALE 0 20 40 60 FEET

BR 3-926 ON SHARPS ROAD OVER BEAVERDAM BRANCH

CONTRACT	BRIDGE NO.	3-926
T201407301	DESIGNED BY:	S.M.
COUNTY		
SUSSEX	CHECKED BY:	C.A.S.

CONSTRUCTION PLAN

SHEET NO. 6
TOTAL SHTS. 11