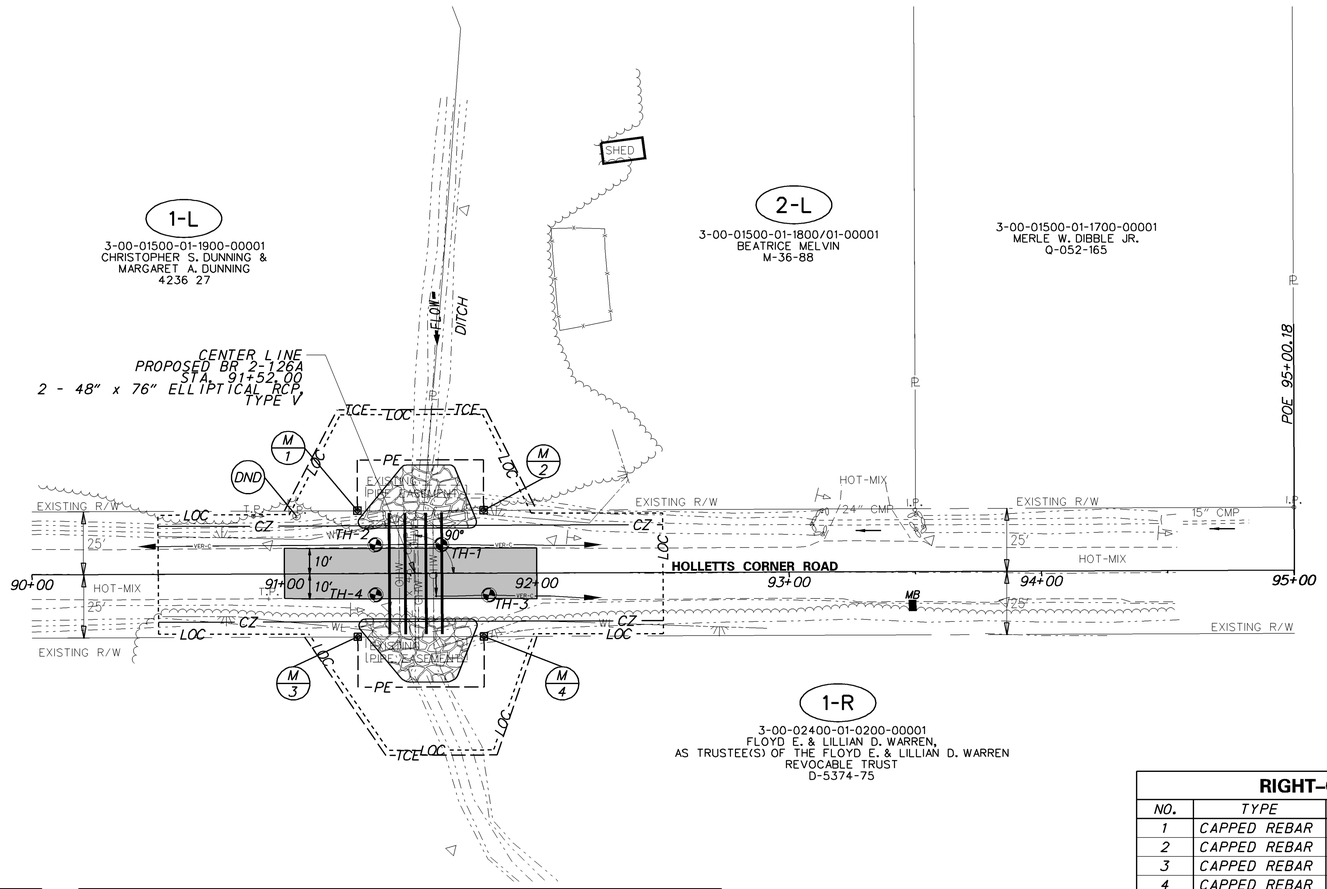

RIGHT-OF-WAY MONUMENT SCHEDULE					
NO.	TYPE	STATION	OFFSET	NORTHING	EASTING
1	CAPPED REBAR	91+29.00	-25.00	465194.5649	561631.5981
2	CAPPED REBAR	91+79.00	-25.00	465146.0765	561643.7997
3	CAPPED REBAR	91+29.00	25.00	465182.3633	561583.1097
4	CAPPED REBAR	91+79.00	25.00	465133.8744	561595.3115

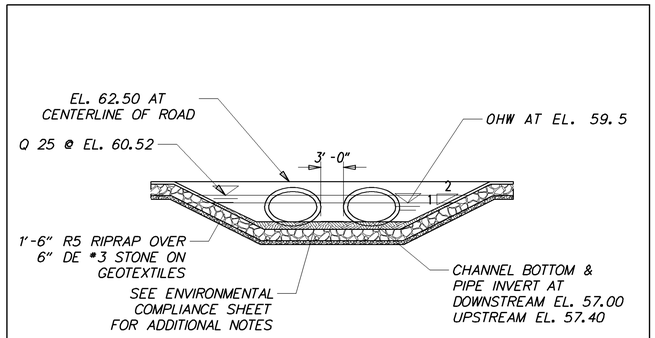

BRIDGE ELEVATION

1" = 20'

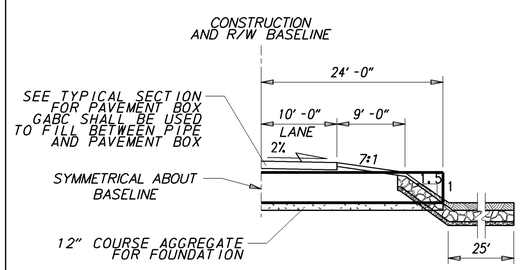

BRIDGE SECTION

1" = 20'

UTILITY TEST HOLE SCHEDULE						
NO.	UTILITY	STATION	OFFSET	GRND EL.	COVER	O.D. & MATERIAL
1	VERIZON	91+62.28	-11.44	61.83	2.06'	3/4" CABLE
2	VERIZON	91+36.10	-11.45	56.92	2.38'	3/4" CABLE
3	VERIZON	91+81.04	8.59	62.16	2.18'	1/2" CABLE
4	N/A	91+36.13	8.39	N/A	N/A	EMPTY

Y:\KENT\Bridge\T201207504

DELAWARE DEPARTMENT OF TRANSPORTATION

ADDENDUMS / REVISIONS

SCALE 0 30 60 90 FEET

KENT AND SUSSEX COUNTY PIPE REPLACEMENTS, STATE, OPEN-END

CONTRACT	BRIDGE NO.	2-126A
T201207504	DESIGNED BY:	S.M.
COUNTY	CHECKED BY:	M.J.G.
KENT		

CONSTRUCTION PLAN

SHEET NO. 14

TOTAL SHTS. 28