ANALYSIS OF ARTIFACT DISTRIBUTIONS FROM A SINGLE ACTIVITY AREA AT THE HAWTHORN SITE (7NC-E-46), NEW CASTLE COUNTY, DELAWARE

Jay F. Custer
Center for Archaeological Research
Department of Anthropology
University of Delaware

ABSTRACT

Spatial analysis of tools and debitage classes from a Late Archaic-Early Woodland butchering activity area at the Hawthorn site shows the presence of a stone tool kit composed of both expedient and curated items. Bifaces and flake technologies are included in both expedient and curated assemblages. Both tool use and tool disposal contexts must be considered to discern the expedient and curated technologies.

Paper presented at the 1985 Middle Atlantic Archaeological Conference, Rehoboth Beach, Delaware.

INTRODUCTION

The purpose of this paper is to explore the interpretations that can be developed from the detailed analysis of spatial distributions of debitage and tools from a single activity area at the Hawthorn site. While much of this analysis has as its goal the simple reconstruction of limited spatial patterns of human tool-making and tool-use, these kinds of reconstructions can reveal interesting insights about the more general role of technology's role in adaptations. Also, the interpretations of the functional data have important implications for our use of certain projectile point styles as chronological markers. In some ways, this paper expands upon a paper (Bachman and Custer 1984) given at last year's MAAC which generally addressed the relationships among data on projectile point morphology, use-wear, and activity area context from the Hawthorn site. My purpose here is to focus more specifically upon these data from a single limited-function activity area.

Excavations at the Hawthorn site were carried out by the University of Delaware Center for Archaeological Research and were funded by the Delaware Department of Transportation and the Federal Highway Administration. I especially thank Kevin Cunningham and Daniel Griffith for their help and support of the project. I also thank Colleen DeSantis and Mark Shaffer, who worked on the entry of the data into the computer, and David Bachman, who did most of the cataloging.

SITE CONTEXT

The following discussion is abstracted from the original site report (Custer and Bachman 1984) and a recent summary (Bachman and Custer 1984). The Hawthorn site is located in the Delaware High Coastal Plain approximately five kilometers south of the Fall Line. It is also within five kilometers of Churchmans Marsh, a large estuarine marsh complex that is the focus of intensive prehistoric settlement (Custer 1982). On a more detailed level, the Hawthorn site is located adjacent to a small springhead that feeds an unnamed tributary of the White Clay Creek (Figure 1). The Hawthorn site was discovered during Phase II testing of an 18th-20th century farmstead when prehistoric artifacts were discovered in a buried soil horizon that showed some pedogenic development. A small pit feature was also encountered during the test excavations and was interpreted as an indication that a portion of the site may have contained *in situ* deposits. Phase III data recovery excavations consisted of 55 five-foot squares and focused on the area containing the *in situ* feature.

Phase III excavations revealed that prehistoric artifacts

were located within a buried B-horizon. Pedological analysis revealed the presence of clay skins and incipient blocky structure (Custer and Bachman 1984:Appendix I) which indicated that the B-horizon had been intact as an old land surface approximately 4000 - 5000 years ago and had not been subject to erosion or disturbance since that date. Furthermore, the buried B-horizon was buried rather quickly by slopewash during the post-3000 BC time period. Later additional slopewash buried the site even deeper such that a portion of the site approximately 10 - 20 cm thick was protected from later plow disturbance. Artificial burial by driveway construction further protected the site from later historic erosion and mixing. Clearly, there are no empirical data from the analysis of the depositional context of the artifacts to suggest that any mixing of the site.

Figure 2 shows three clear-cut activity areas that were delineated from the analysis of the distribution of various classes of artifacts and features. Area I includes a small pit feature that appears to have been associated with the processing of nuts and seeds, a discarded axe which showed striations indicative of reuse as a plant processing tool, concentrations of fire-cracked rock, concentrations of charred hickory nut hulls, and concentrations of charred Chenopodium and Amaranth seeds. All sections of the site were subjected to analysis for the presence of these ecofacts; therefore, their presence in this area of the site is not a result of analytical bias or re-deposition. Area II was characterized by a variety of projectile points, cutting and scraping tools that had been broken in use and discarded, and some debitage. Small debitage from resharpening of tools was also especially abundant in the flotation samples from this section of the site. This area will be the subject of the more intensive analysis presented below. Area III was characterized by the presence of an oval ring of stones that is similar to features identified as tent-rings at other sites. The area within the tent ring structure was free of artifacts, but did have some associated accumulations of flakes and discarded and rejected tools were found adjacent to the structure.

In general, three clearly defined activity areas were present at the site. One was associated with processing of plant foods, another seems to be a butchering and animal resource processing area, and the third seems to be a temporary residential area with associated tool kit refurbishing activities. The presence of these clearly defined activity areas supports the contention that the artifact distributions are not mixed. In fact, the presence of concentrations of charred hickory nut hulls and seed reamins in pits and in general excavation levels indicates very little redeposition of even very small artifacts and ecofacts at the site within the buried soil. Refitted artifacts link together the separate activity areas and indicate that all three activity areas represent the same occupations of the site. Also, the discrete nature of the artifact associations within the activity areas argues against multiple occupations of the site. Thus, the data on artifact

FIGURE 2

ACTIVITY AREAS

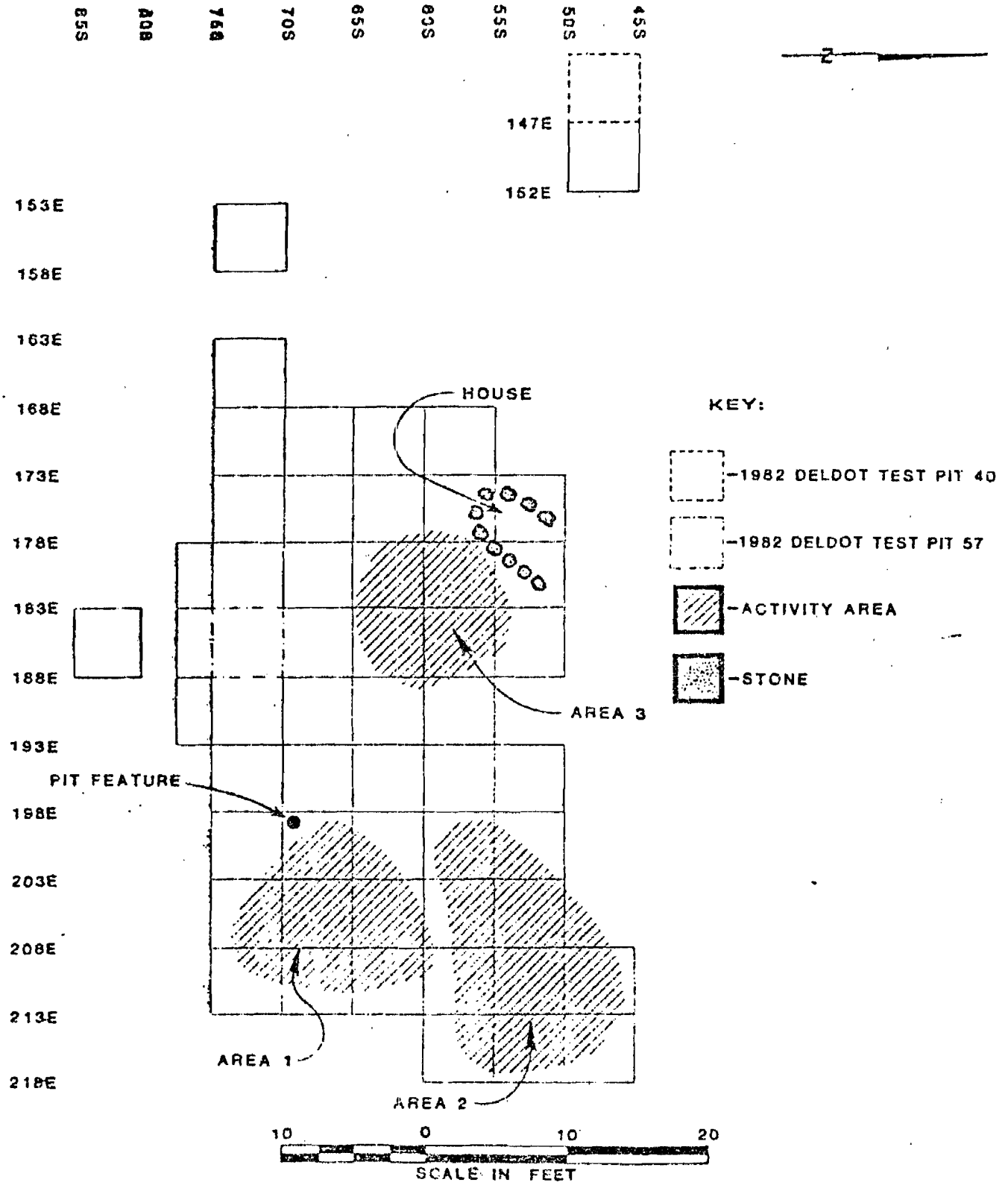

distributions indicate that the assemblage of artifacts from the Hawthorn site represents a single, short-term occupation of the site. The burial of the site was quick enough to preserve activity areas, but was of sufficiently low energy to not destroy artifacts associations and features. In sum, the data from the Hawthorn site provide an oppurtunity to consider patterns of stone tool utilization from a fairly large area at a very limited point in time.

RESEARCH QUESTIONS AND METHODS OF ANALYSIS

In the remainder of this paper, I will consider the spatial distribution of various functional classes of tools and debitage for Area II, one of the three discrete activity areas noted above. Area II was initially characterized as a butchering area with some associated tool refurbishing (Custer and Bachman 1984:111-112) and was chosen for further analysis because it seemed to be a good area to investigate the relationships among tool morphology, use-wear attributes, and raw material preferences. Abundant debitage was present in one portion of the activity area and not in another (Custer and Bachman 1984:101, 103-104) and tools of differing functions were scattered among the debitage (Custer and Bachman 1984:94-95). These patterns, which seemed to be apparent from the initial analysis were interesting and warranted further study. Specifically, the spatial and functional data from Area II were used to consider two basic questions: 1) the relationships among projectile point morphologies, tool function, and raw materials (Table 1), and; 2) the spatial organization of butchering activities and directly related tool manufacturing activities. Analysis of these questions required spatial plotting of varied artifacts classes.

The spatial distributions noted in the original report were analyzed by using artifacts counts for each 5-foot square. However, the counts from 5-foot squares represent aggregated data because the minimum provenience unit excavated at the site was a 1-foot square. For the purposes of this paper, the 1-foot square counts will be used as the basic analytical unit for the study of Area II. This finer scale data allowed a closer discrimination of spatial patterning within the activity area.

The fine-scale artifact counts and grid coordinates of the 1-foot squares were entered into an IBM-XT computer using the Ashton-Tate dBASE III software. The dBASE III system was then used to create a series of mapping files which were fed into the Golden Software PC Mapping Package. This package smoothed the data, computed moving averages, and plotted three-dimensional maps of artifact density distributions. The artifact density plots were then combined with one another, and with plots of different functional tool classes, for analysis. Functional tool

Table 1: Point Types, Functions, and Raw Materials

Point Type	Function	Wear Patterns	Raw Material
Side-notched and corner-notched	slicing knife	asymmetrical blade; edge rounding, flake ridge polishing, striations parallel to edge	quartz
Large stemmed	heavy cutting	transverse fractures; twist and snap breaks; edge crushing	ironstone, quartzite
Small stemmed	projectile points	impact fractures; distal polishing	argillite, jasper
Broadspear	mutli-function	varied wear patterns; resharpening across transverse fractures	quartzite, jasper, rhyolite

Source: Bachman and Custer 1984; Custer and Bachman 1984

classes were taken from data in the original report (Bachman and Custer 1984:74-87, Appendix III).

SPATIAL ANALYSIS

The first step in the analysis of the Hawthorn site data was to generate some descriptive statistics and crosstabulations of artifact categories, raw materials, and presence/absence of cortex. Presence/absence of cortex was noted in order to distinguish initial cobble reduction activities. Table 2 shows the distribution of cortex and raw materials among flakes and total tools and Table 3 shows the same distribution data for flake tools. These tables show that artifacts without cortex predominate in the assemblage and that quartz, jasper, and ironstone debitage comprise the majority of the flakes. Table 4 shows a crosstabulation of raw materials and biface and flake tool counts within four major functional categories. These four categories are based on use-wear types and represent the following activities: cutting, slicing, scraping - final butchering and processing; heavy cutting - initial butchering (cutting and dismembering of the carcass); projectile points - damaged points brought back to the site in carcasses or as part

Table 2: Flakes and Total Tools by Raw Material and Cortex - Area II

Artifact Class	Cortex	No Cortex	Total
All Tools	11	31	42
Quartz Flakes	158	1291	1449
Quartzite Flakes	0	167	167
Chert Flakes	25	62	87
Jasper Flakes	38	200	238
Rhyolite Flakes	0	35	35
Argillite Flakes	3	38	41
Ironstone Flakes	0	222	222
Total	335	1961	2296

Table 3: Flake Tools by Raw Materials and Cortex - Area II

Raw Material	Cortex	No Cortex	Total
Quartz	0	4	4
Quartzite	1	0	1
Rhyolite	1	0	1
Total	2	4	6

of tool kits to be discarded; manufacturing rejects - bifaces which have failed the reduction, or resharpening process. Table 4 has insufficient data for a chi-square test, but subjective observation seems to indicate that quartz predominates in the cutting, slicing, scraping category. A broader perspective can be obtained by considering the same crosstabulation for the total site data (Table 5). The broader site data supports the association of quartz with the cutting, slicing, scraping category. Further associations indicated by the total data set are jasper and argillite with projectile points, quartz and ironstone with manufacturing rejects, and ironstone with heavy cutting. When the raw material data are grouped they can be analyzed with a chi-square test (Table 6). The chi-square

Table 4: Biface and Flake Tool Categories by Raw Material - Area II

Raw Material	Cutting, Slicing, Scraping	Projectile Points	Manufacturing Rejects	Heavy Cutting	Total
Quartz	13	1	3	1	18
Quartzite	3	0	0	1	4
Chert	0	0	1	0	1
Jasper	1	3	1	1	6
Argillite	2	1	0	0	3
Ironstone	0	1	2	1	4
Total	19	6	7	4	36

Table 5: Biface and Flake Tool Categories by Raw Materials - All Areas

Raw Material	Cutting, Slicing, Scraping	Projectile Points	Manufacturing Rejects	Heavy Cutting	Total
Quartz	23	1	5	4	33
Quartzite	4	0	0	4	8
Chert	1	0	1	2	4
Jasper	10	7	1	2	20
Argillite	3	6	1	0	10
Ironstone	0	1	6	7	14
Total	41	15	14	19	89

Table 6: Collapsed Data Matrix - Biface and Flake Tool Categories by Raw Materials

Raw Material	Cutting, Slicing, Scraping	Projectile Points	Manufacturing Rejects	Heavy Cutting	Total
Quartz and Quartzite	27 (19)	1 (7)	5 (6)	8 (9)	41
Cryptocrystalline	11 (11)	7 (4)	2 (4)	4 (5)	24
Argillite	3 (5)	6 (1)	1 (2)	0 (2)	10
Ironstone	0 (6)	1 (3)	6 (2)	7 (3)	14
Total	41	15	14	18	89

Number in parentheses is expected value.

statistic equaled 45.28 (d.o.f.=9, $p<.005$) and indicates that the associations noted above are statistically significant. These associations were used to guide the spatial analysis within Area II.

The first step in the spatial analysis was to plot the total flake and total tool distributions for Area II and these are shown in Figures 3 and 4. The tools are also noted by functional category in Figure 4. It can be seen that there are low numbers of both flakes and tools in the southeastern corner of Area II. The southwestern area also has few flakes, but does contain numerous tools. In general, the tools are clustered in tight concentrations in the southwestern corner of the block. In the northeastern area there is a diffuse scatter of tools with a small cluster along the northern edge of the block. For purposes of analysis, Area II was divided into two sub-areas based on the types of tool distributions (Figure 4). Sub-area A is characterized by tight and discrete tool clusters while Sub-area B is characterized by a more diffuse scatter. Table 7 shows a crosstabulation of tool use categories between the two areas. A chi-square test showed no dependence between the variables (chi-square=1.17, d.o.f.=3, $p>.75$), indicating that the two areas were generally similar with respect to the types of tools found in each area. Overall, cutting, slicing, and scraping tools predominated in both sub-areas supporting the initial identification of Area II as a butchering locale. However, the different nature of the distributions in each sub-area (tight clusters in Sub-area A and diffuse scatter in Sub-area B) still

FIGURE 3

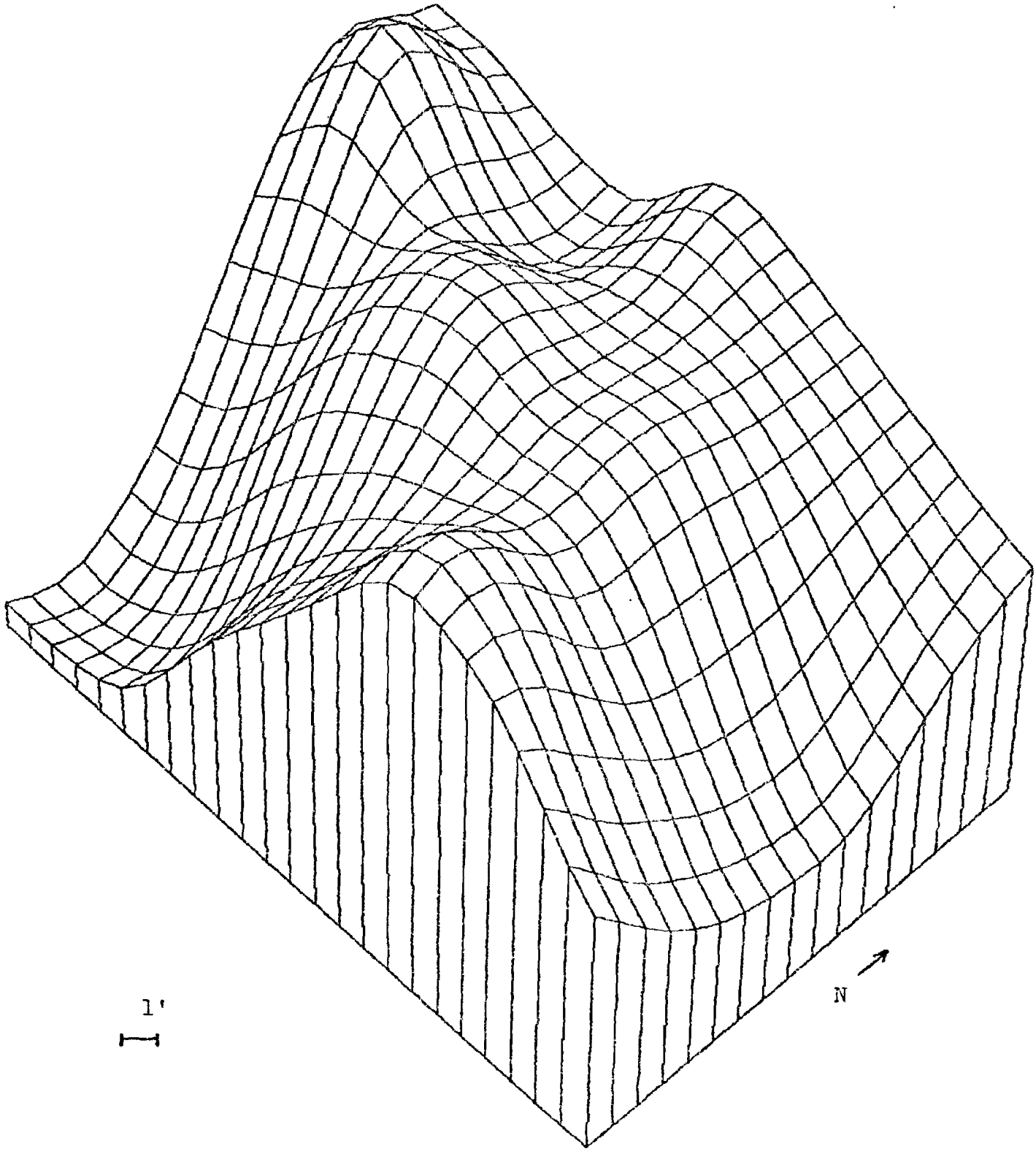

TOTAL FLAKES

FIGURE 4

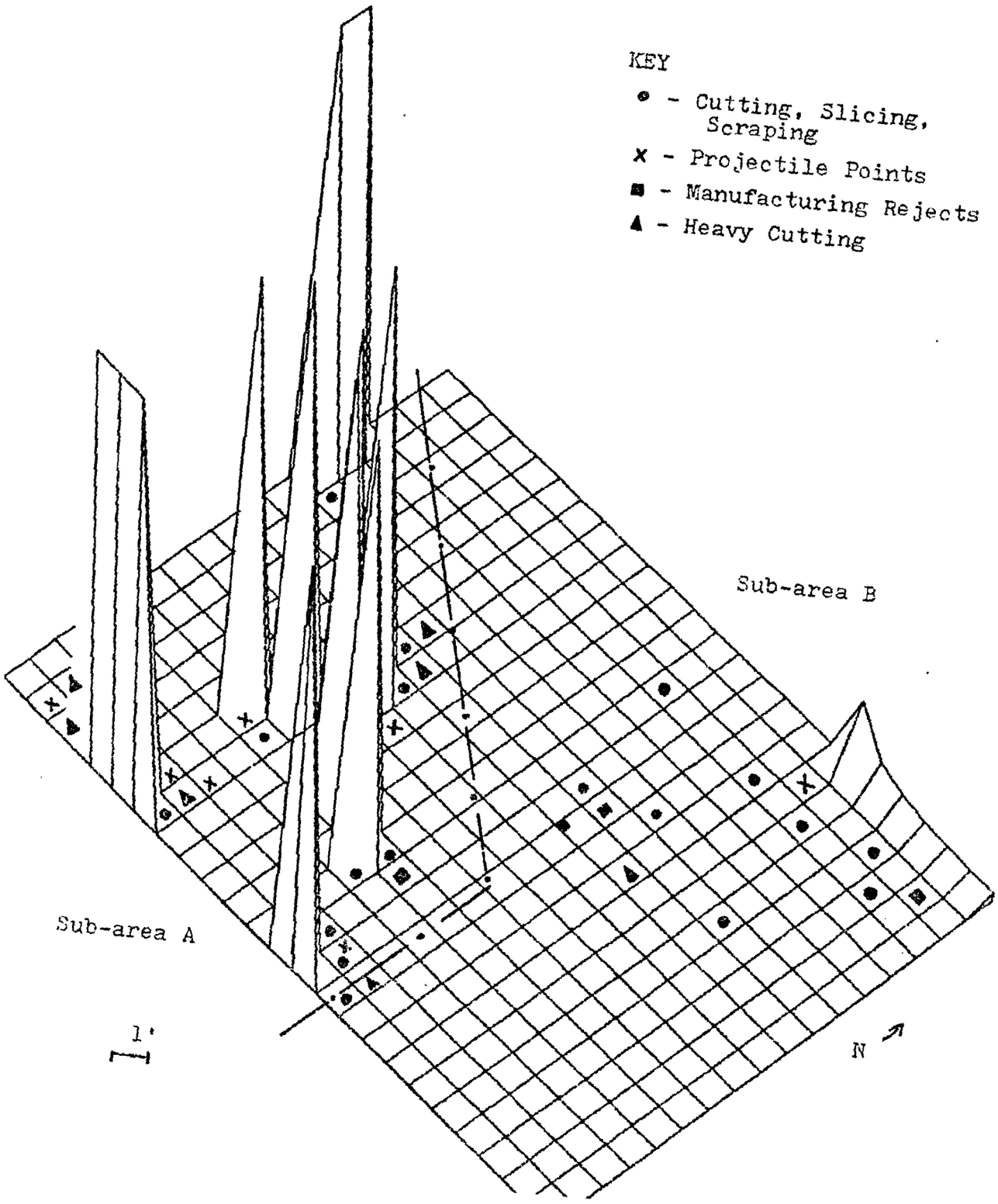
KEY
- Cutting, Slicing, Scraping
- Projectile Points
- Manufacturing Rejects
- Heavy Cutting
Sub-area B
Sub-area A
1'
N

remains to be explained.

Analysis of debitage characteristics was undertaken to see if there were any patterns that corresponded to the tool distribution differences between the sub-areas. Comparison of Figures 3 and 4 shows that the dividing line between the two sub-areas is characterized by the largest accumulations of flakes. Indeed, the majority of the clustered tool distributions co-occur with dense flake concentrations.

The distribution of flakes with and without cortex was also considered because the presence/absence of cortex can show different reduction activities among cobble-based lithic industries. For example, high proportions of flakes with cortex indicate either early stage biface reduction or the production of cores (Custer et al. 1981). Given the low frequency of early stage bifaces at the Hawthorn site (Custer and Bachman 1984:62-71), the presence of cortex on flakes at the Hawthorn site indicates core and flake production (for further supporting data see Custer and Bachman 1984:70-74). Figure 5 shows the distribution of flakes with cortex and Figure 6 shows the distribution of flakes without cortex. The distribution of flakes with cortex is similar to that of total flakes with a few gentle peaks along the dividing line between the two sub-areas and a concentration in the southeastern corner of the block. On the other hand, flakes with no cortex show a series of discrete concentrations throughout Sub-area A (Figure 6). The different distributions in Figures 5 and 6 suggest that limited cobble core preparation took place in the southeast and central sections of Area II producing a diffuse scatter of cortex flakes. On the other hand a series of discrete reductions of non-cortex cores, and resharpening and reduction events, took place throughout Sub-area A producing the sharp peaks noted in Figure 6.

A total of seven cores were recovered from the two 5-foot squares in the southwest corner of Sub-area A compared with 3 total cores from the remaining 8 squares of Area II and 25 total cores from the remaining 45 squares of the total site. Clearly, the density of cores in Sub-area A is higher than that of either the entire site or the remainder of Area II. This concentration of cores in Sub-area A would support the argument that cores were initially shaped from cobbles in the southeast corner of Sub-area B and then were reduced in Sub-area A. All of the cores from Area II are quartz and all could still produce usable flakes. Furthermore, the quartz flake tools from Area II all lack cortex although 50% of the cores retained cortex on one end. These observations seem to indicate that quartz cobbles were prepared for use as cores by removing the cortex on one end. Then, flakes were struck off from the non-cortex end of the core in an adjacent portion of Area II. When sufficient flakes had been produced, the cores were discarded and not curated, even though they could still produce usable flakes.

Plots of different raw material types and the presence and absence of cortex within them was also undertaken to help sort

FIGURE 5

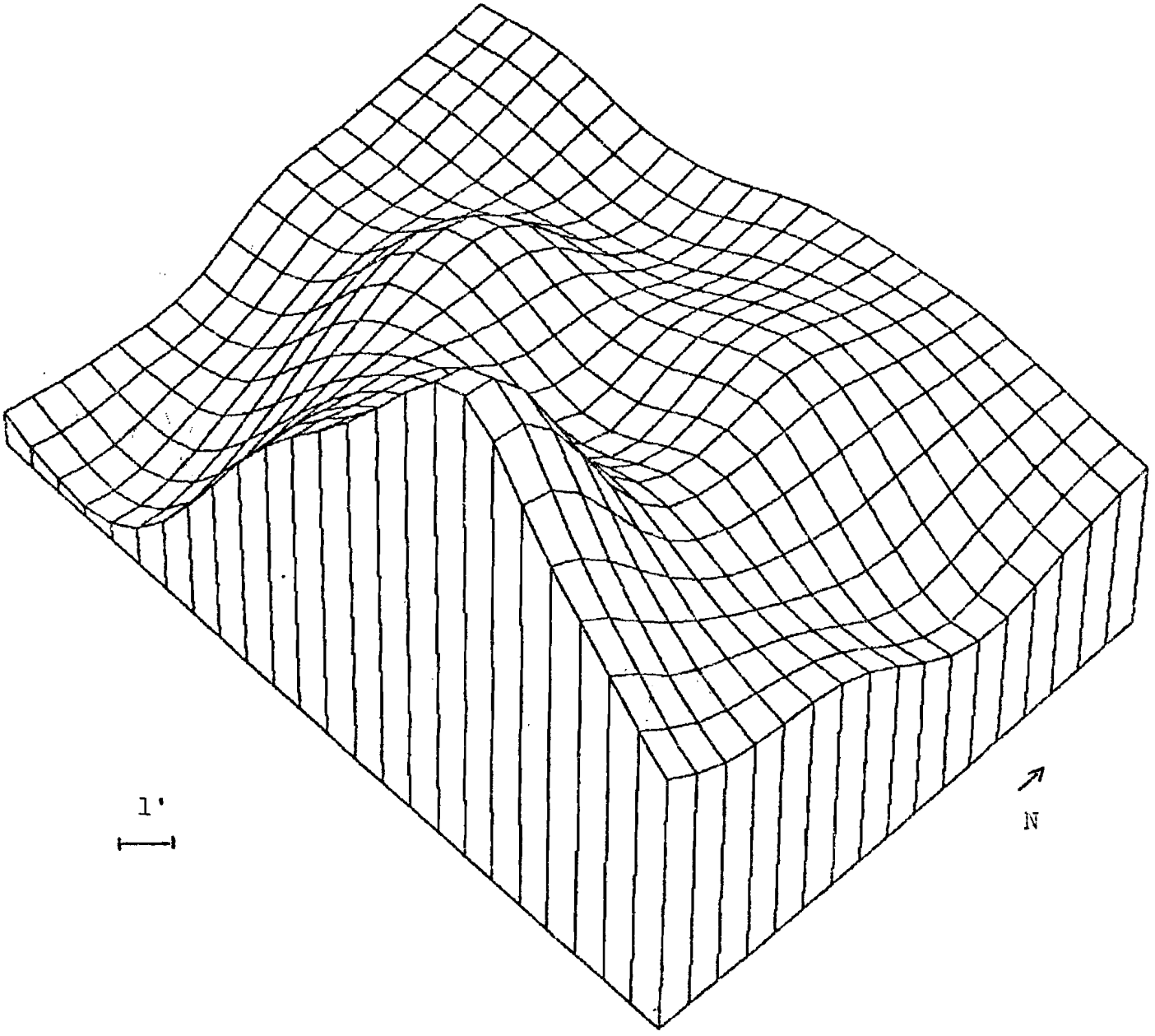

FLAKES WITH CORTEX

FIGURE 6

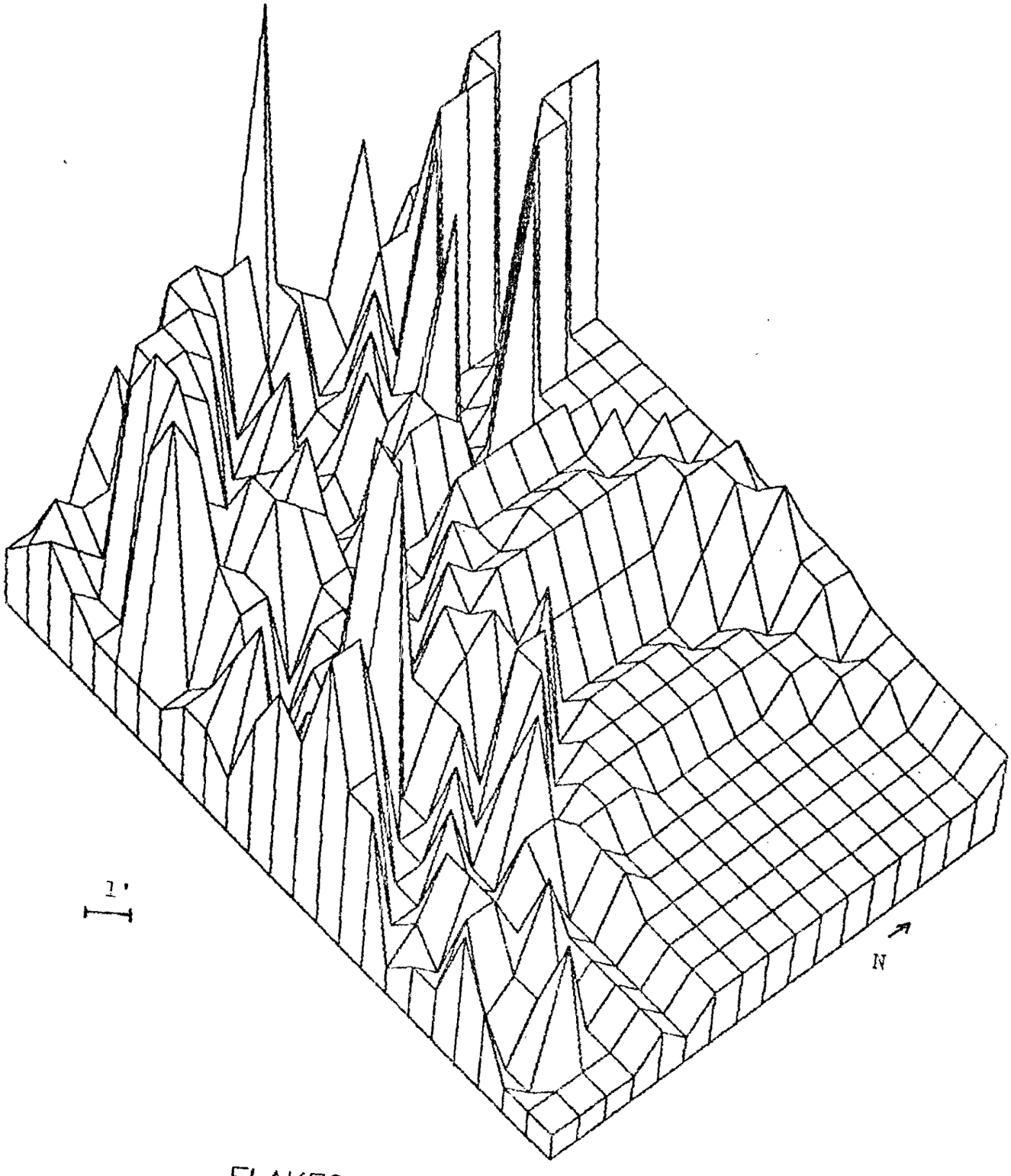

FLAKES WITH NO CORTEX

out patterning in Area II. Figures 7 and 8 show the distribution of quartz flakes with and without cortex and these distributions are similar to those for total artifacts (Figures 3 and 5). This is not surprising given the fact that quartz flakes comprise the bulk of the artifact assemblage (see Table 2). Consequently, the interpretations for the total flake assemblage noted above can be generalized to the quartz assemblage. Figures 9 and 10 show the distribution of chert cortex and non-cortex flakes. When compared with each other, these distributions appear to be mirror images - the peaks in one match the valleys in the other. The distribution of chert flakes with cortex shows some cobble core preparation associated with the area of quartz core production and a second concentration is noted near the northern border of the block. Both concentrations may be viewed as core preparation; however, the presence of one chert early stage biface in Area II indicates that some limited initial stage manufacturing of chert bifaces was taking place in Sub-area A. The distribution of jasper flakes with and without cortex can also be studied and are shown in Figures 11 and 12. The distribution of jasper cortex flakes (Figure 11) shows a cluster in the core preparation area as well as smaller concentrations in the central area with the greatest overall frequency of flakes. The presence of two jasper biface rejects in the central area (Figure 4) shows that some of these flakes may be related to limited biface reduction. The distribution of non-cortex flakes shows a series of sharp peaks within Sub-area A. These peaks match those in the total flakes distribution and probably indicate discrete episodes of core and biface reduction. An especially interesting feature of the jasper non-cortex distribution is the presence of a small "plateau" of jasper flakes in the northeast corner of Sub-area B. This part of Sub-area B is an area of low artifacts density for all materials <u>except</u> jasper non-cortex flakes. The implication of this anomaly will be discussed later.

There is an insiffucuent number of flakes of other raw materials with cortex to warrant plotting cortex and non-cortex flakes (see Table 2); however, the total flake distributions of other materials can be plotted. Figure 13 shows the distribution of quartzite flakes and concentrations are noted on the eastern edge of the site partially overlapping the core production area. None of the quartzite flakes have cortex (Table 2); therefore, the concentration of quartzite flakes must be related to something other than core preparation.

Three non-local lithic raw materials were present in the Hawthorn assemblage (argillite, rhyolite, and ironstone) and they have interesting distribution patterns. Figure 14 shows the distribution of ironstone flakes. Experimental studies currently under way at the University of Delaware Center for Archaeological Research have shown that ironstone is a brittle material and that flakes from this material usually crumble upon detachment from the core. Consequently, the flakes are not usable as tools and their presence indicates episodes of biface reduction or resharpening. There are several ironstone bifaces rejects and

FIGURE 7

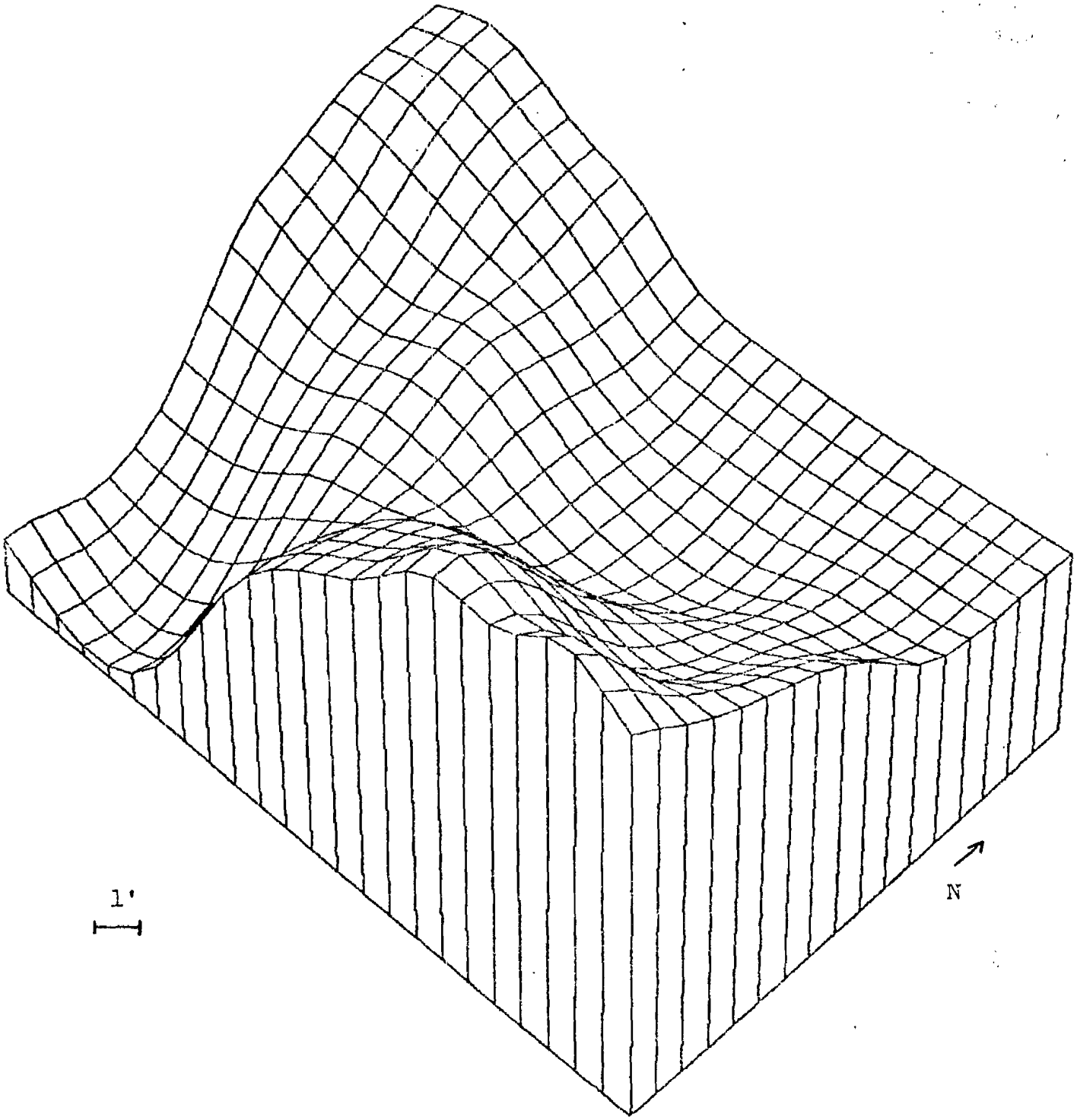

QUARTZ CORTEX FLAKES

FIGURE 8

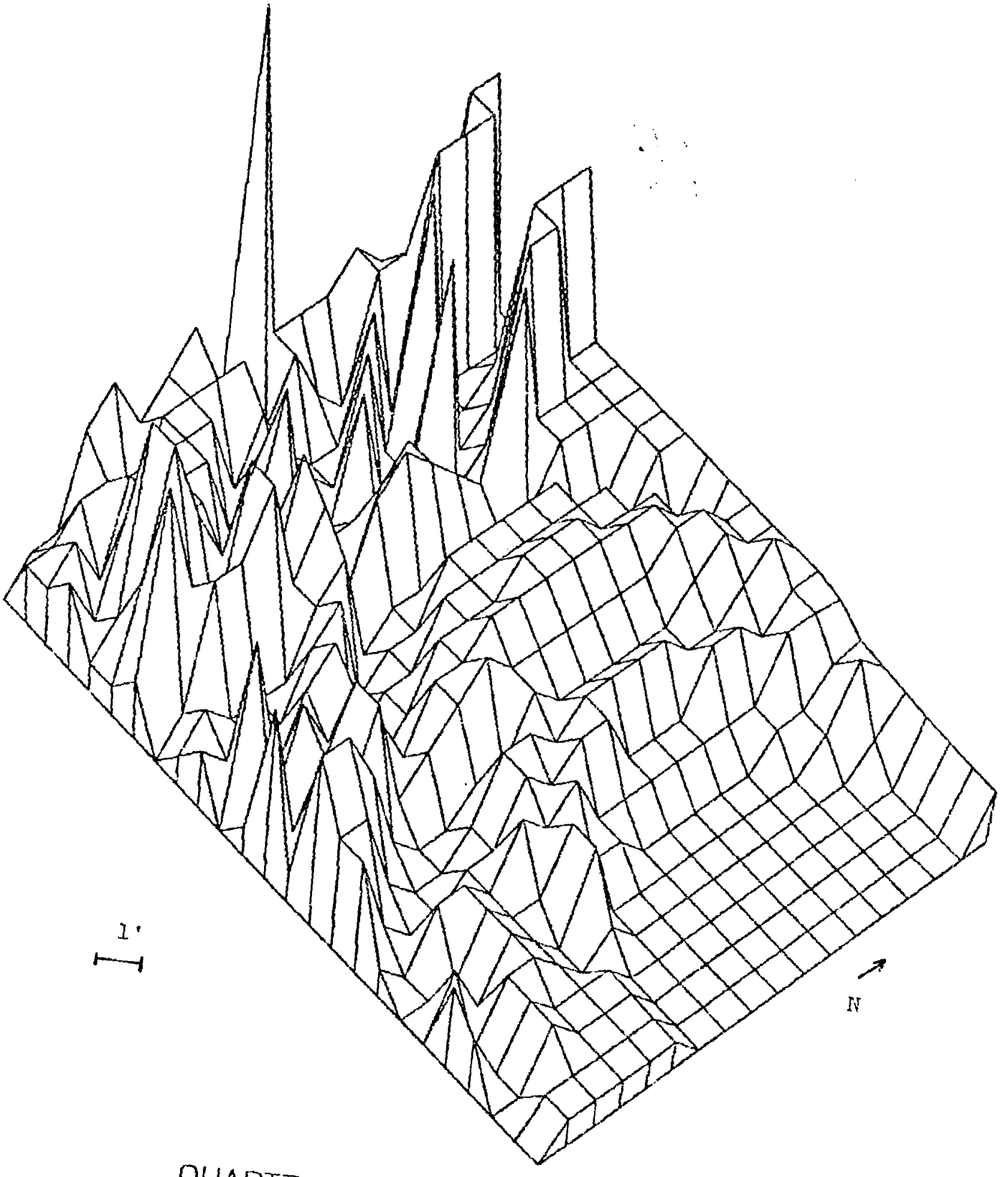

QUARTZ FLAKES – NO CORTEX

FIGURE 9

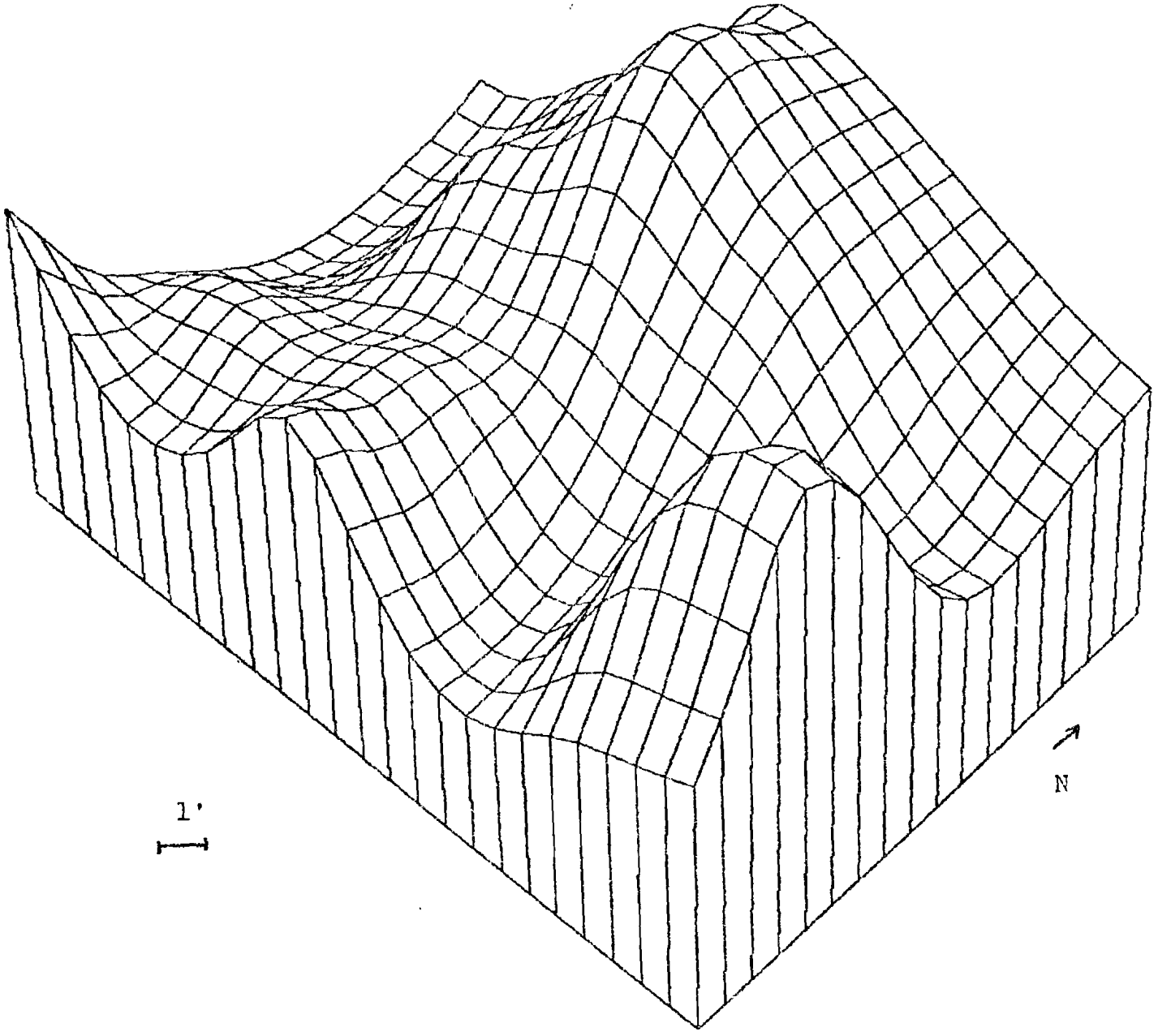

CHERT CORTEX FLAKES

FIGURE 10

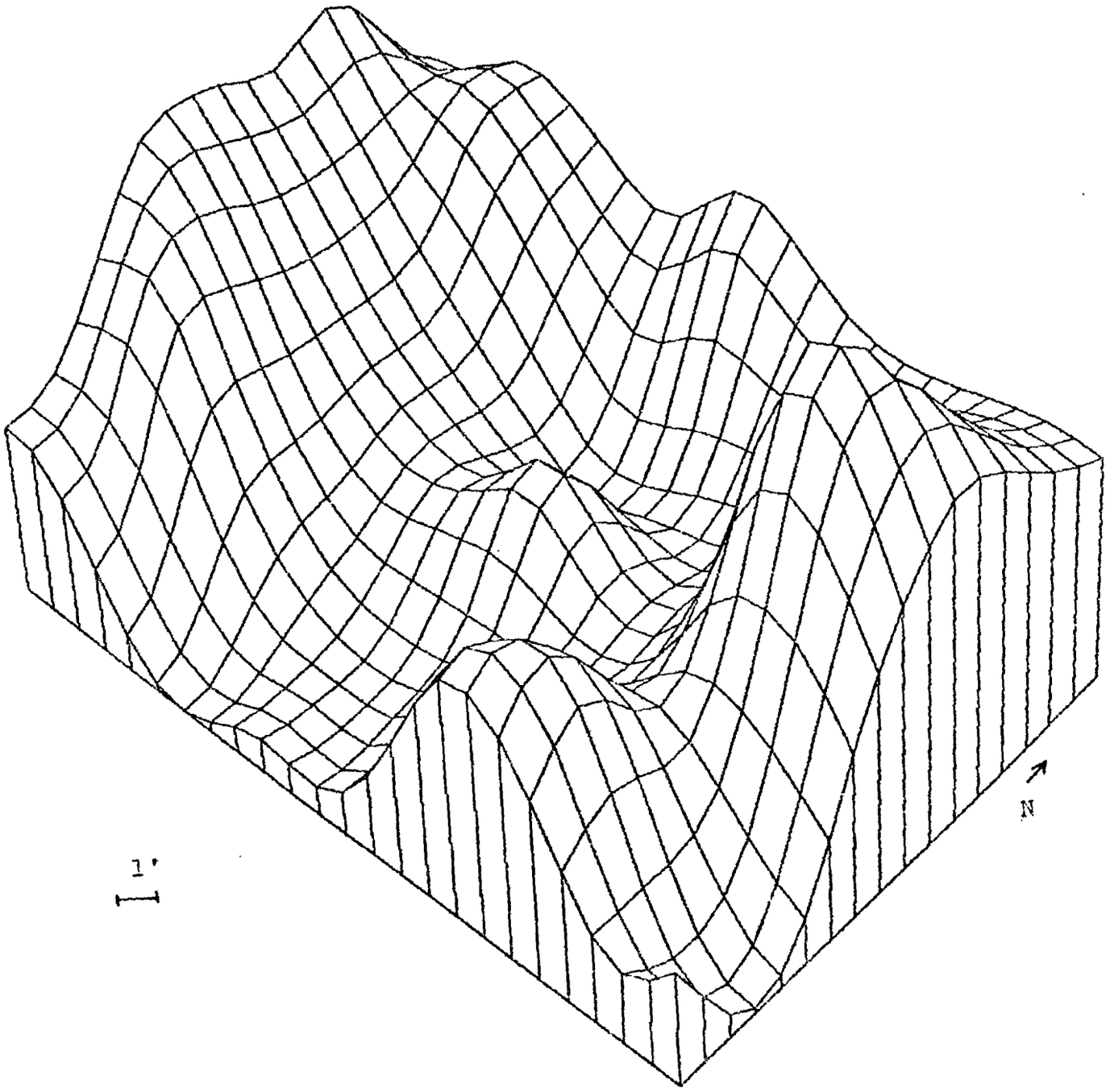

CHERT NON-CORTEX FLAKES

FIGURE 11

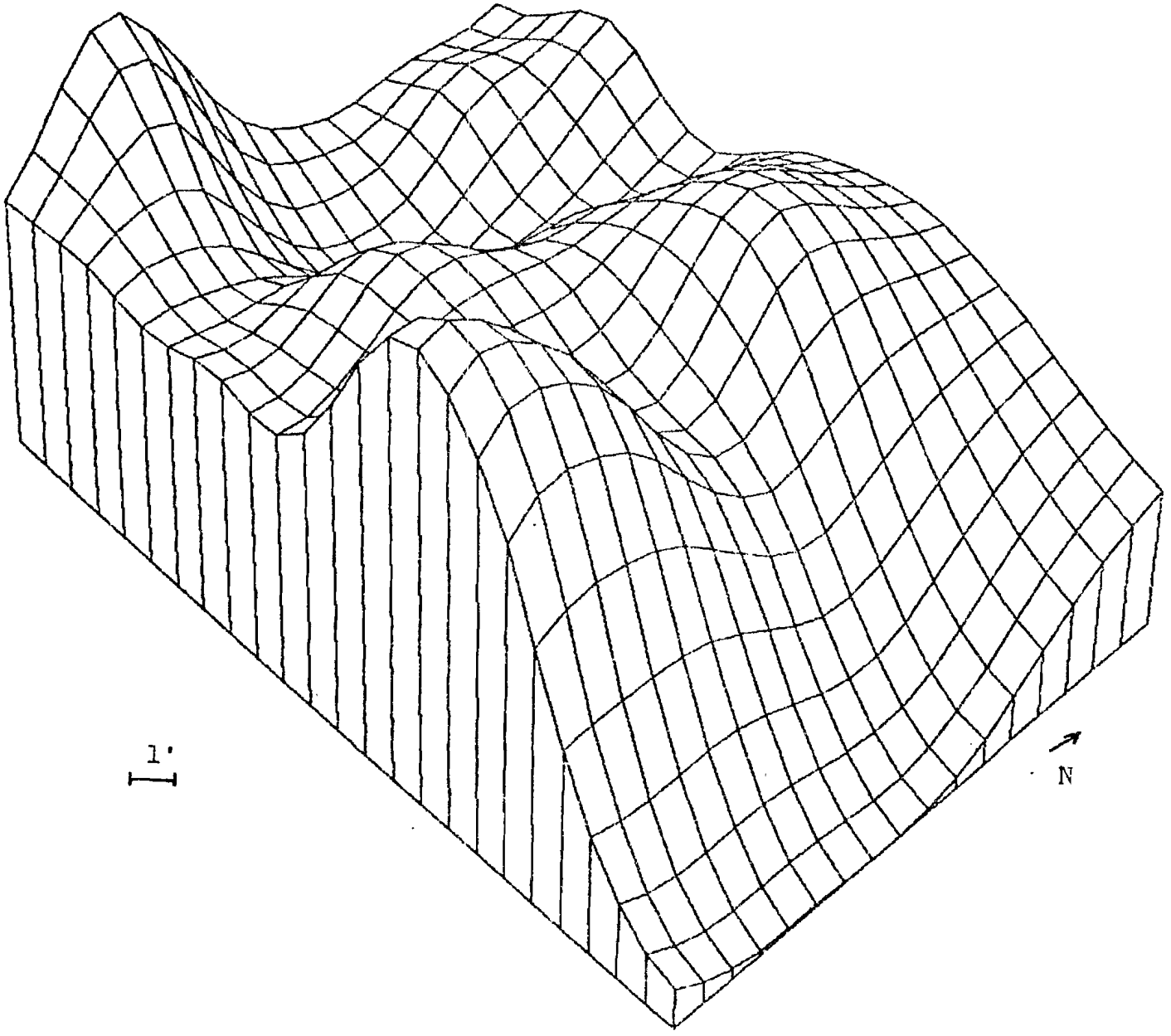

JASPER CORTEX FLAKES

FIGURE 12

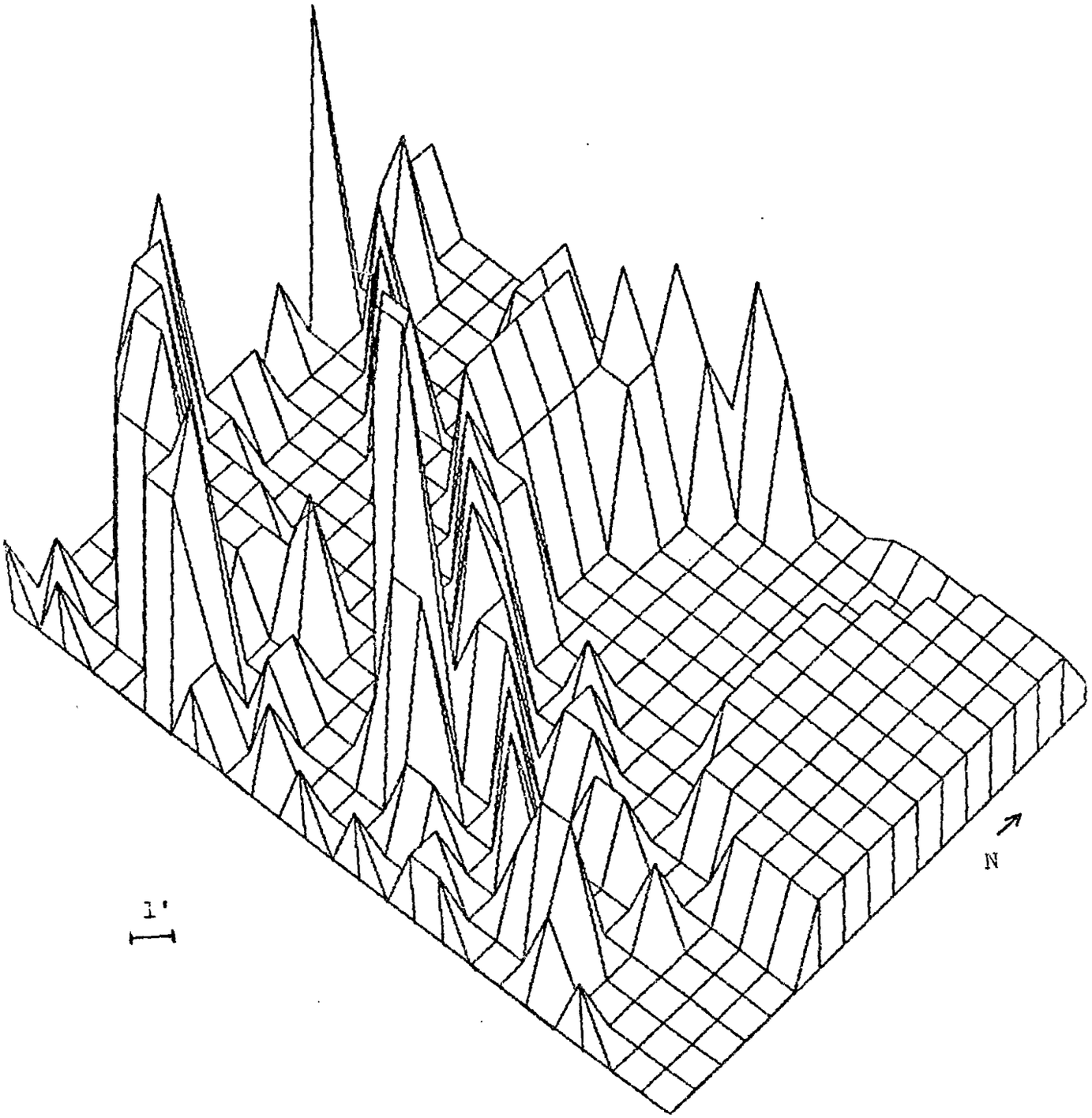

JASPER NON-CORTEX FLAKES

FIGURE 13

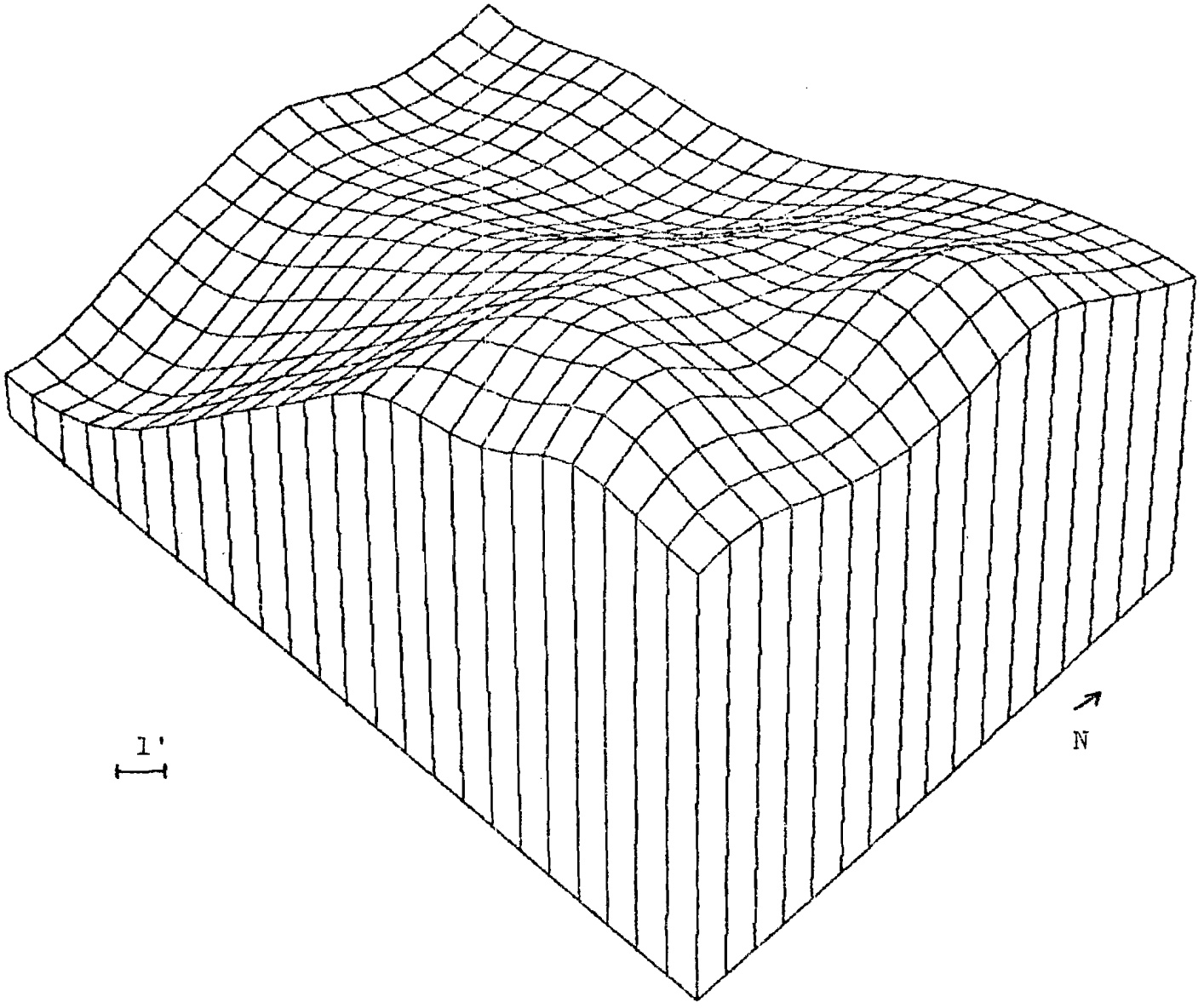

TOTAL QUARTZITE FLAKES

FIGURE 14

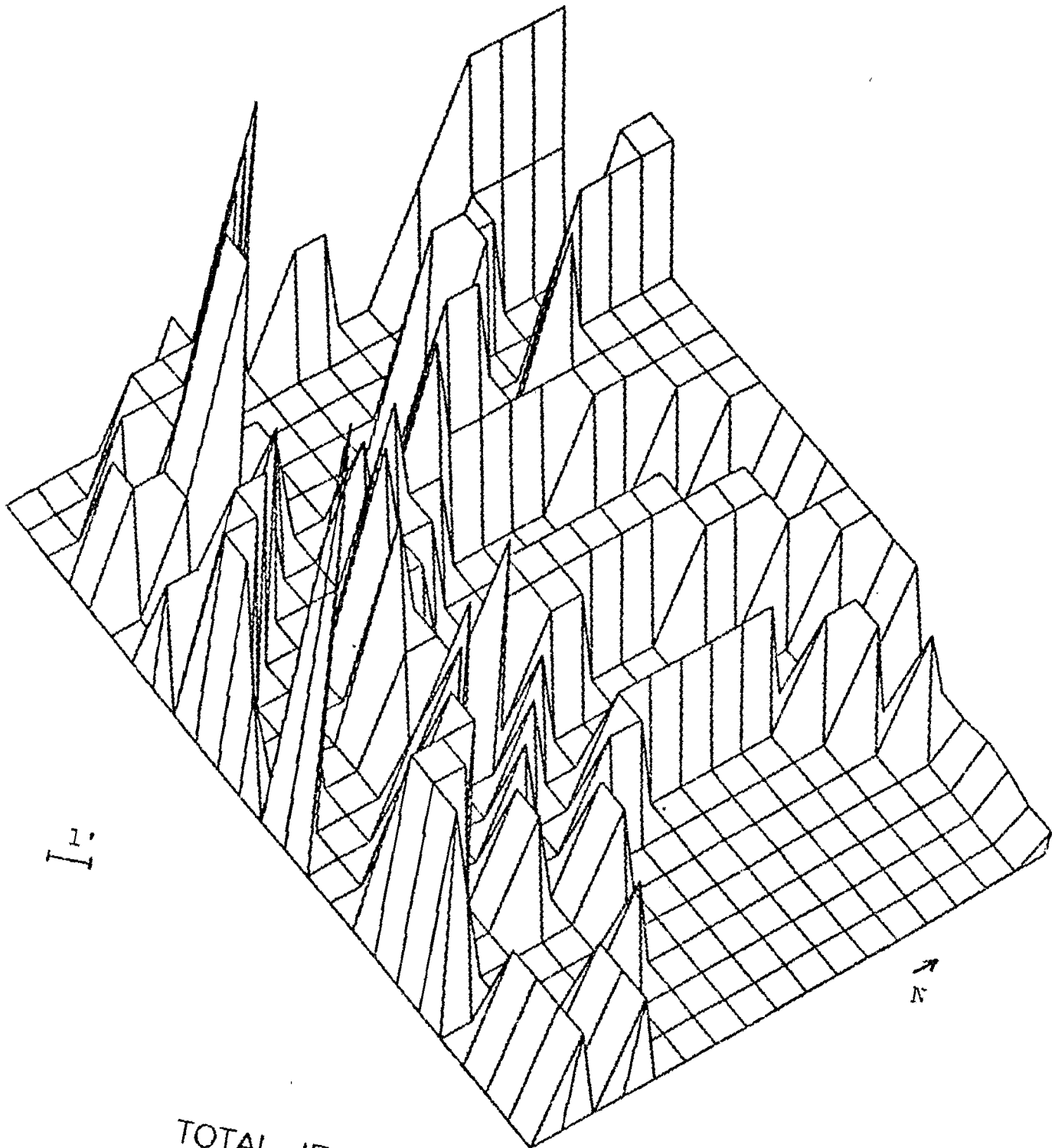

TOTAL IRONSTONE FLAKES

discards present at the Hawthorn site (Custer and Bachman 1984:64-67) and the numerous peaked concentrations in Figure 14 are probably representative of individual episodes of biface reduction or resharpening. The presence of a few discarded points and related bifaces in Area II underscores the validity of this interpretation. The distributions of argillite and rhyolite flakes (Figures 15 and 16) are different from that of ironstone and they show a limited number of peaked concentrations in the southwest corner of Area II. In almost all cases in the Delaware High Coastal Plain, debitage from these materials is derived exclusively from late stage biface production and maintenance (Custer 1984a), and the material from the Hawthorn site is no exception (Custer and Bachman 1984:68-74). Therefore, the peaked concentrations in Figures 15 and 16 are associated with biface manufacture. The rhyolite distribution is especially interesting because no bifaces made from rhyolite were found at the site. Consequently, the rhyolite debitage represents the maintenance of tools which were probably later removed from the site.

The final flake category distribution plotted was debitage from flotation samples (Figure 17). A concentration in the southeastern corner of the site can be noted. This concentration is associated with the "blank" spot in the overall flake distribution (Figure 3) and can be interpreted as an area of intensive tool resharpening. 82% of the flotation debitage was quartz.

DISCUSSION

Figure 18 shows a summary of the distribution data described above. Noted on Figure 18 are the varied "patches" of artifacts of varied functions and raw materials. Figure 19 shows the inferred activity areas which can be matched up with the distributions noted in Figure 18. The blank spot, measuring approximately 5-feet by 10-feet, on the eastern edge of Area II is interpreted here as the actual butchering work area. Binford (1983:165-172) notes numerous ethnographic examples of butchering work areas where the active work area is relatively devoid of artifacts. Usually, the work area is then surrounded by areas with more numerous artifacts related to the butchering process itself and to maintenance of the butchering tools (Binford 1983:170, Fig. 109). The data from the Hawthorn site match with one-half of such a distribution. It is unfortunate that the remainder of the distribution to the east was destroyed by construction of an access road. Some artifacts were found within the blank spot and included numerous quartz cutting, slicing, and scraping tools, jasper flakes without cortex, and resharpening debitage. The quartz tools and jasper flakes are not clustered together and are most likely tools used in the final stages of butchering. These tools were then discarded haphazardly immediately within the butchering work area. Some of these tools

FIGURE 15

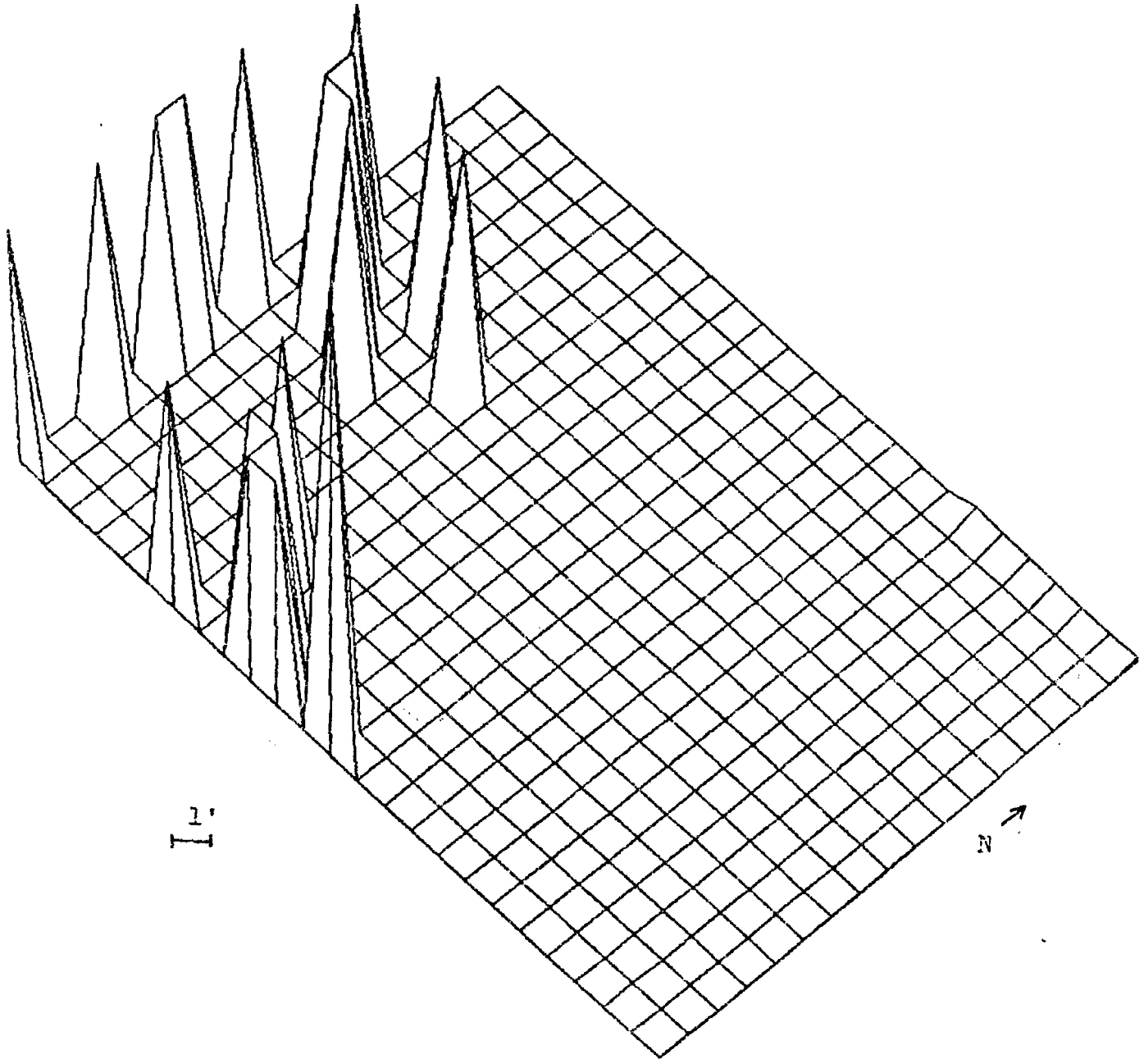

TOTAL ARGILLITE FLAKES

FIGURE 16

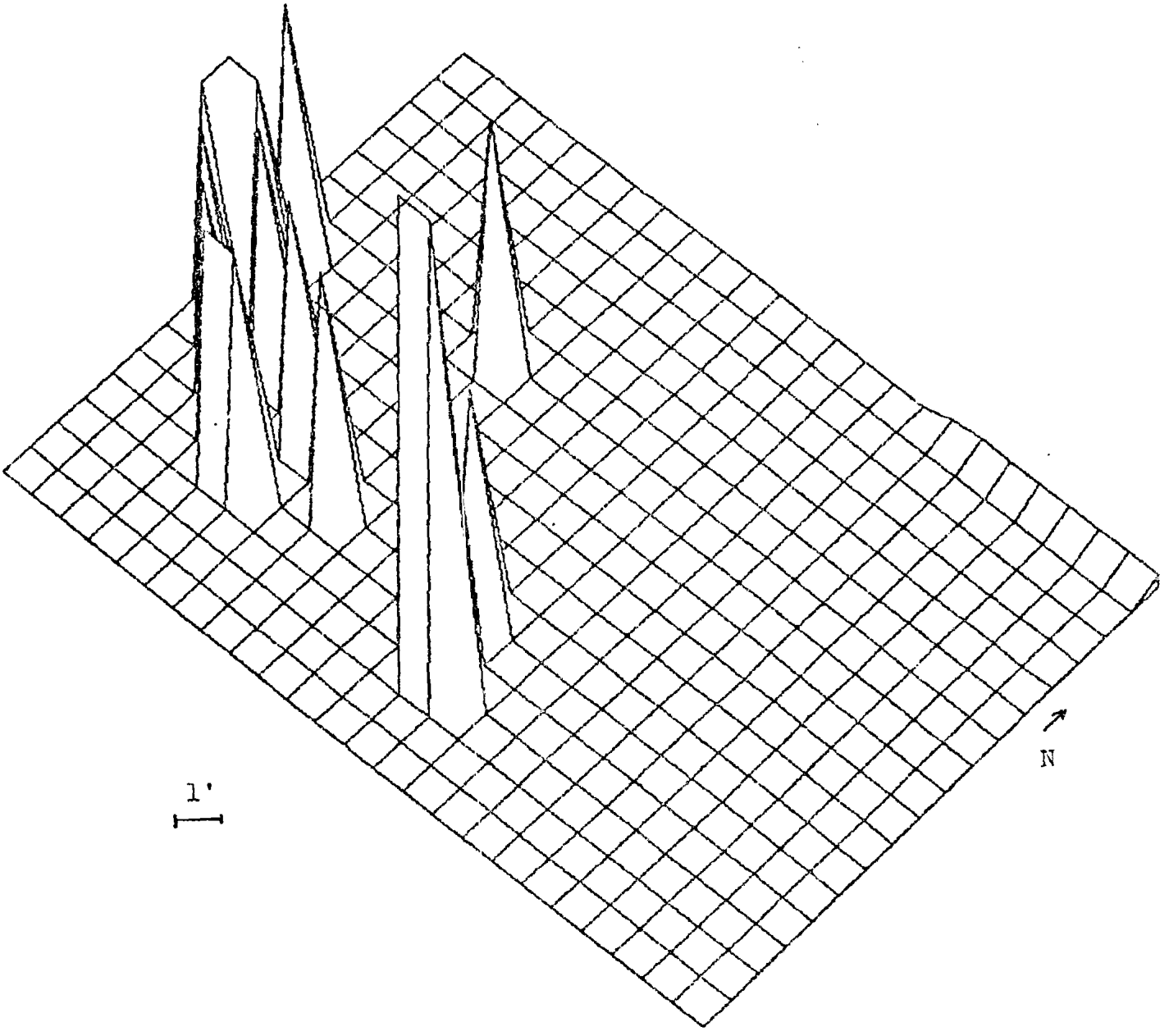

TOTAL RHYOLITE FLAKES

FIGURE 17

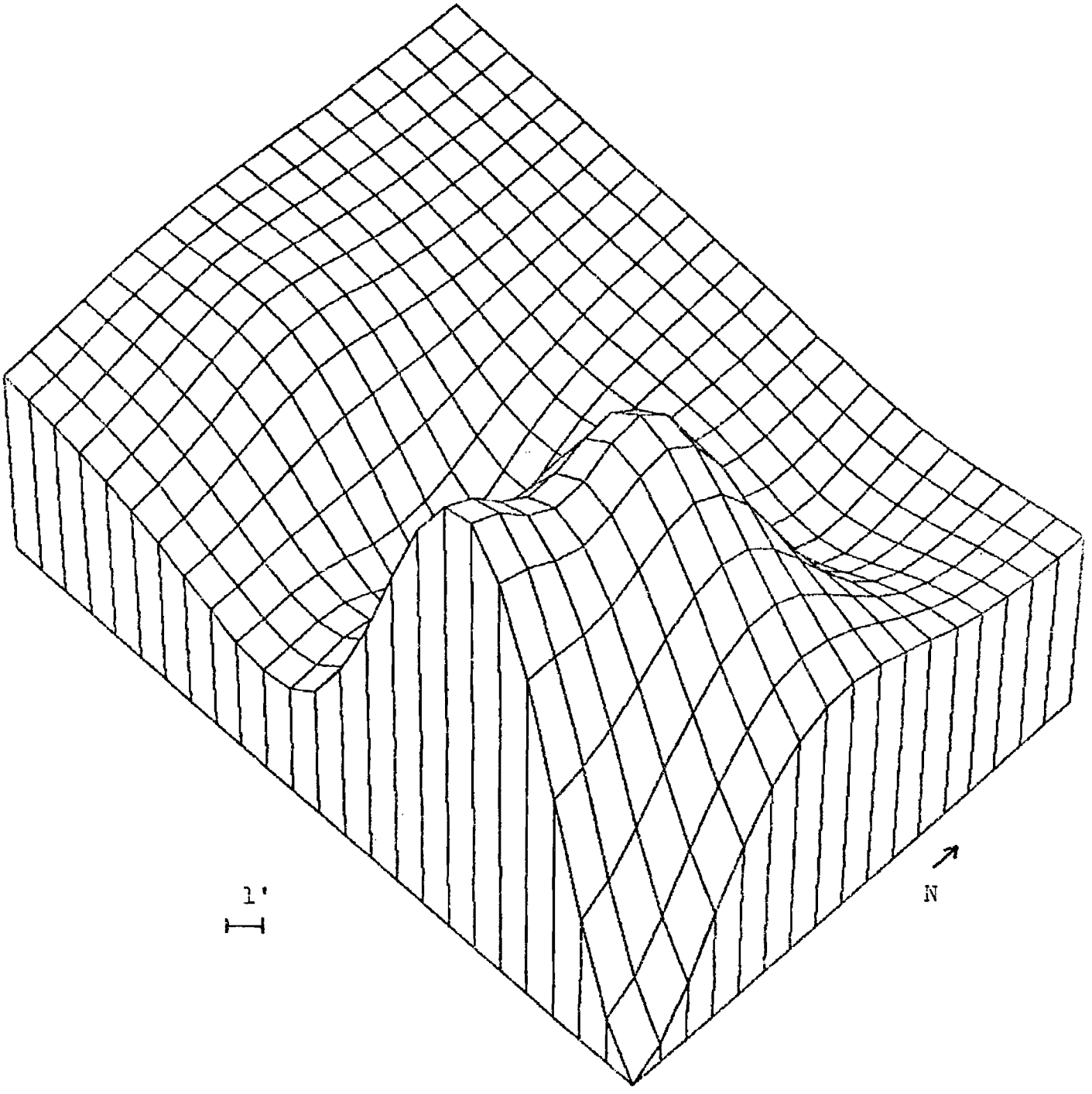

FLOTATION DEBITAGE

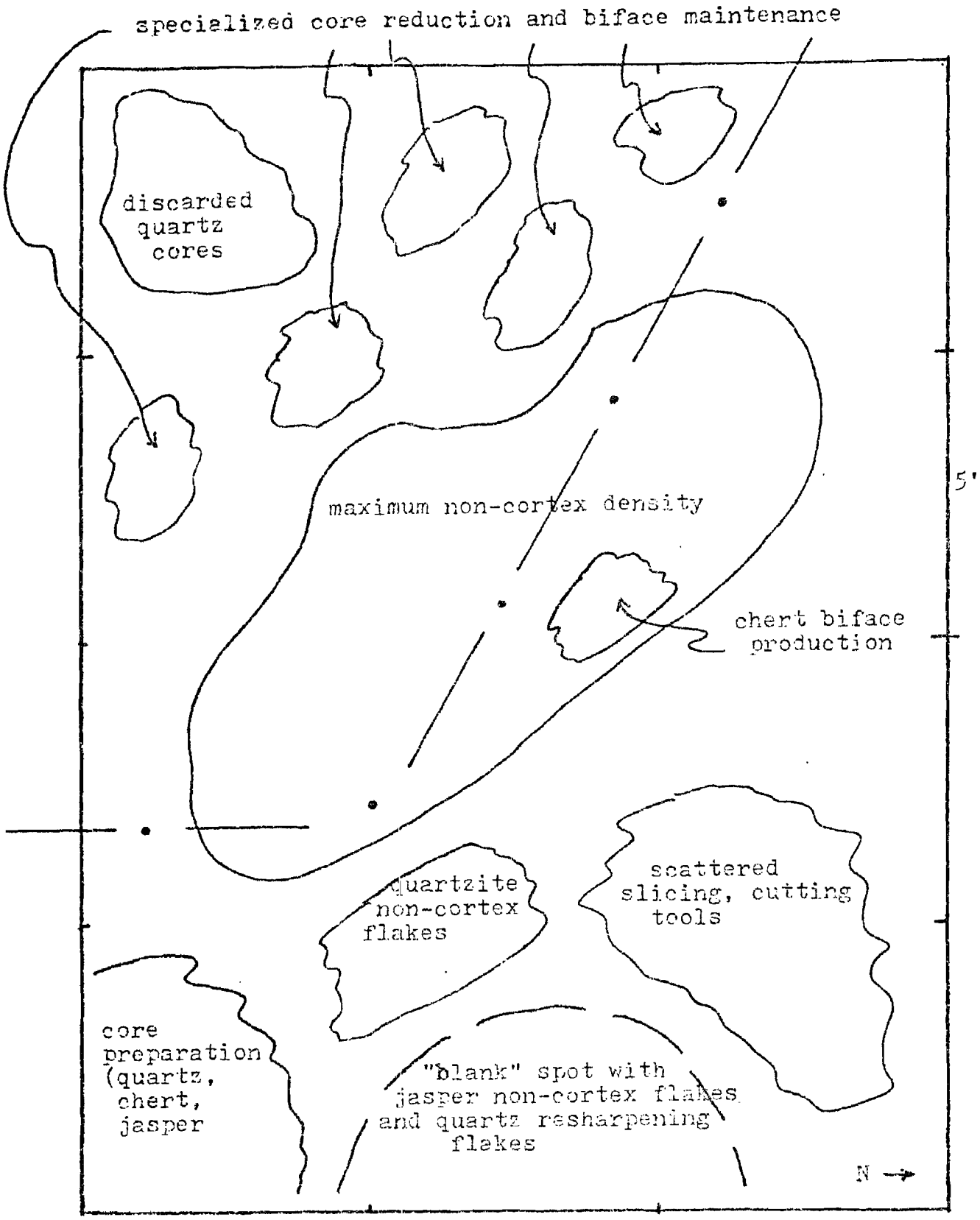

FIGURE 18 - COMPOSITE LITHIC DISTRIBUTION

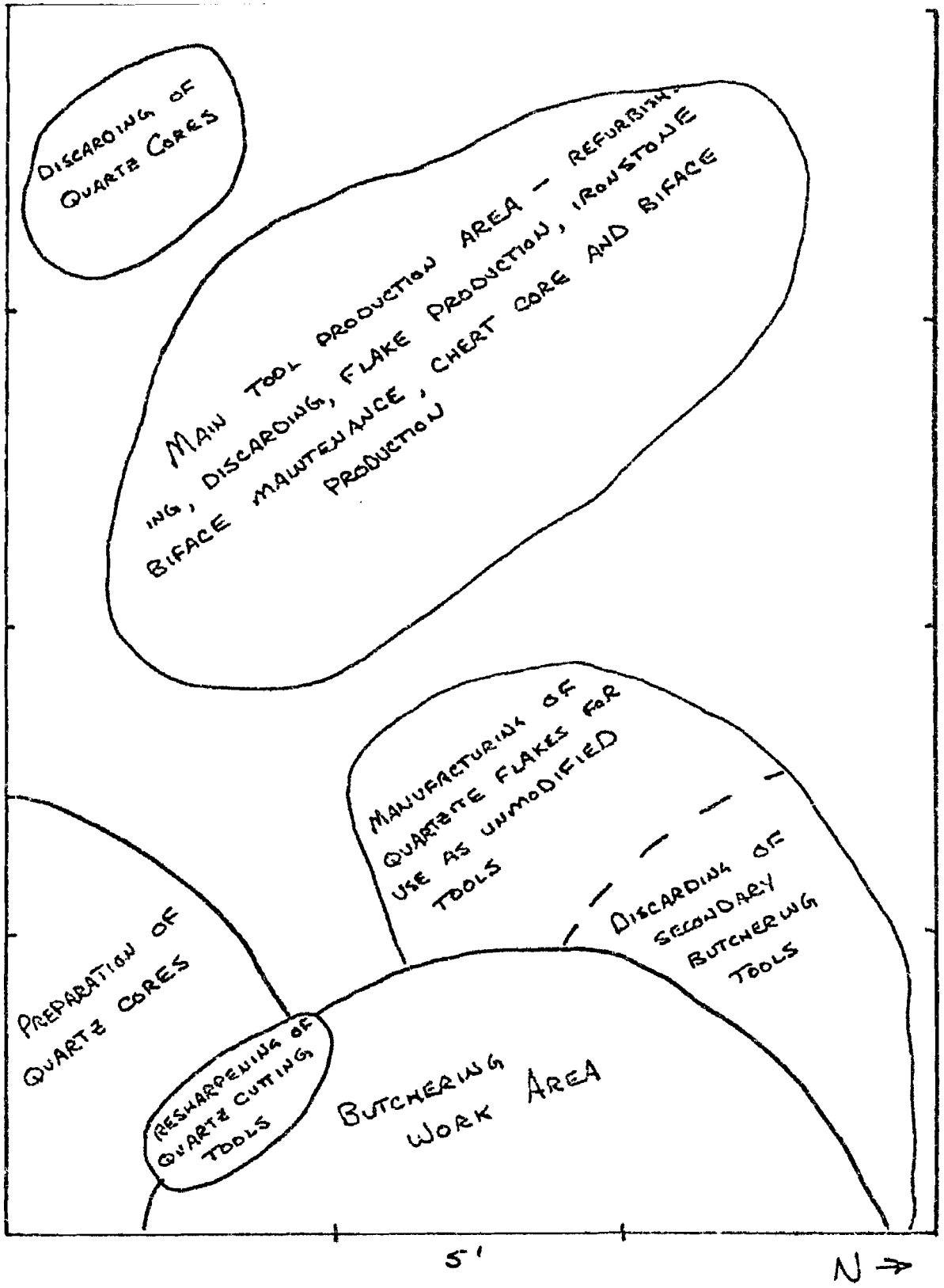

FIGURE 19: ACTIVITY AREAS

are broken, but others are not. The concentration of quartz resharpening debitage in the same area reveals that the quartz cutting tools were being retouched within the butchering work area and may have been resharpened during the butchering process.

A variety of activities were taking place adjacent to the actual butchering work area. In Sub-area B, quartz and chert cores were being prepared and reduced to produce flakes, which were used for either the butchering itself or for the processing of hides, bone, or antler. Much reworking and reduction of ironstone tools took place as well. Tools were discarded in small clusters within this area and these seem to be "dumps" of discards and rejects among the debitage.

There are some interesting differences in lithic utilization patterns between the actual butchering work area and the adjacent area. The tools directly associated with the work area are all quartz and are primarily associated with the later stages of butchering. The same types of tools are found in Sub-Area A; however, the presence of large amounts of ironstone debitage indicates the presence of some other tools associated with butchering. Ironstone stemmed points from the site showed a series of wear attributes associated with heavy cutting activities that are a part of the early stages of butchering (Custer and Bachman 1984:77-78). Only one fragment of such an ironstone tool was found in Area II, but the extensive ironstone debitage indicates that at one point during the use of Area II the early stage butchering tools were being produced and/or refurbished there. The absence of the ironstone tools themselves in the Area II assemblage indicates that these tools were later removed from the area. Analysis of the other major activity areas shows the presence of 7 of the broken ironstone early stage butchering tools in Area III adjacent to the house feature. Area III was characterized as a habitation and tool refurbishing area (Custer and Bachman 1984:111) where unusable tools were culled from the tool kits and I would suggest that the ironstone tools discarded in Area III had been used for early stage butchering in Area II prior to breakage and discard.

Thus, there are two different butchering tool disposal patterns at the Hawthorn site. Early stage butchering tools, which are manufactured from non-local materials, are removed from their use area upon breakage and are discarded as part of a process of "culling" in another specialized habitation/tool kit refurbishing area. Later stage butchering tools, which are almost exclusively manufactured from local cobble materials, are discarded immediately upon breakage within their use area context. Based on disposal patterns, the quartz side-notched knives may be viewed as expedient tools with a limited use-life. It is even possible that they were manufactured on the site for specific purposes. Their use and disposal context is more like unretouched flake tools than bifaces. On the other hand, the large bifaces manufactured from non-local materials are part of tool kit "baggage" which is more carefully curated (Binford 1979) and managed. Also, these curated tools seem to have relatively

limited function as early stage butchering tools at the Hawthorn site. This pattern for ironstone tools also seems to be duplicated at other sites (Ward and Doms 1984).

From the analysis of very localized assemblages, such as that from Area II of the Hawthorn site, we can begin to understand the disposal and use contexts of stone tools. From these contexts it becomes apparent that lithic technologies are dynamic systems composed of inward and outward "flows" of materials. Isaac (1984:44) has used a similar view of stone technologies to generate a model of Lower Paleolithic technologies and Figure 20 shows a revised version of Isaac'a model which applies to the technologies from the Hawthorn site. There are two basic components to the lithic technologies. A curated component (Binford 1979) which is carried from site to site as "baggage" and an expedient component which is procured on an as-needed basis. Sometimes materials pass from the expedient component to the curated component. For example, an expedient core or biface may be retained in the curated assemblage and removed from the site. Curated materials would enter the archaeological record through culling, while expedient materials would be simply discarded close to the location of their use.

Varied tool kits and technologies could be categorized and compared on the basis of the relative proportions and compositions of curated and expedient components. For example, the Late Archaic-Early Woodland Hawthorn assemblage would have a large expedient component whereas a Paleo-Indian assemblage might be expected to have a larger curated component (Goodyear 1979). Furthermore, the nature of the lithic procurement system (cyclical vs. serial - Custer, Cavallo, and Stewart 1983) could be considered to further discriminate among technologies on a processual and organizational basis. The important point to note, however, is that detailed analyses of disposal and functional contexts are necessary to study technologies from this perspective. Only from such a perspective can we come to understand stone technologies as dynamic systems of adaptation.

The findings presented above have some additional implications for field methods and for our notions of the chronological "meanings" of stone tools. First, it should be noted that the analysis presented above was based on the use of 1-foot squares as the <u>minimum</u> excavation unit. Exact provenience techniques produce interesting results, and pretty pictures (Gross 1974), but they are not always necessary. Indeed, spatial analysis often requires the lumping of the exact provenience data into small spatial units analgous to those used here. Therefore, small excavation units (1-foot or .5-meter) provide a middle ground for almost all excavation contexts. Similarly, I would note that it is no longer appropriate to dig 5-foot, 1-meter, or 2-meter excavation units in a data recovery context of undisturbed soils. There is almost no time added when smaller excavation units are shoveled, and the information return is many times greater.

FIGURE 20: LITHIC TECHNOLOGY MODEL

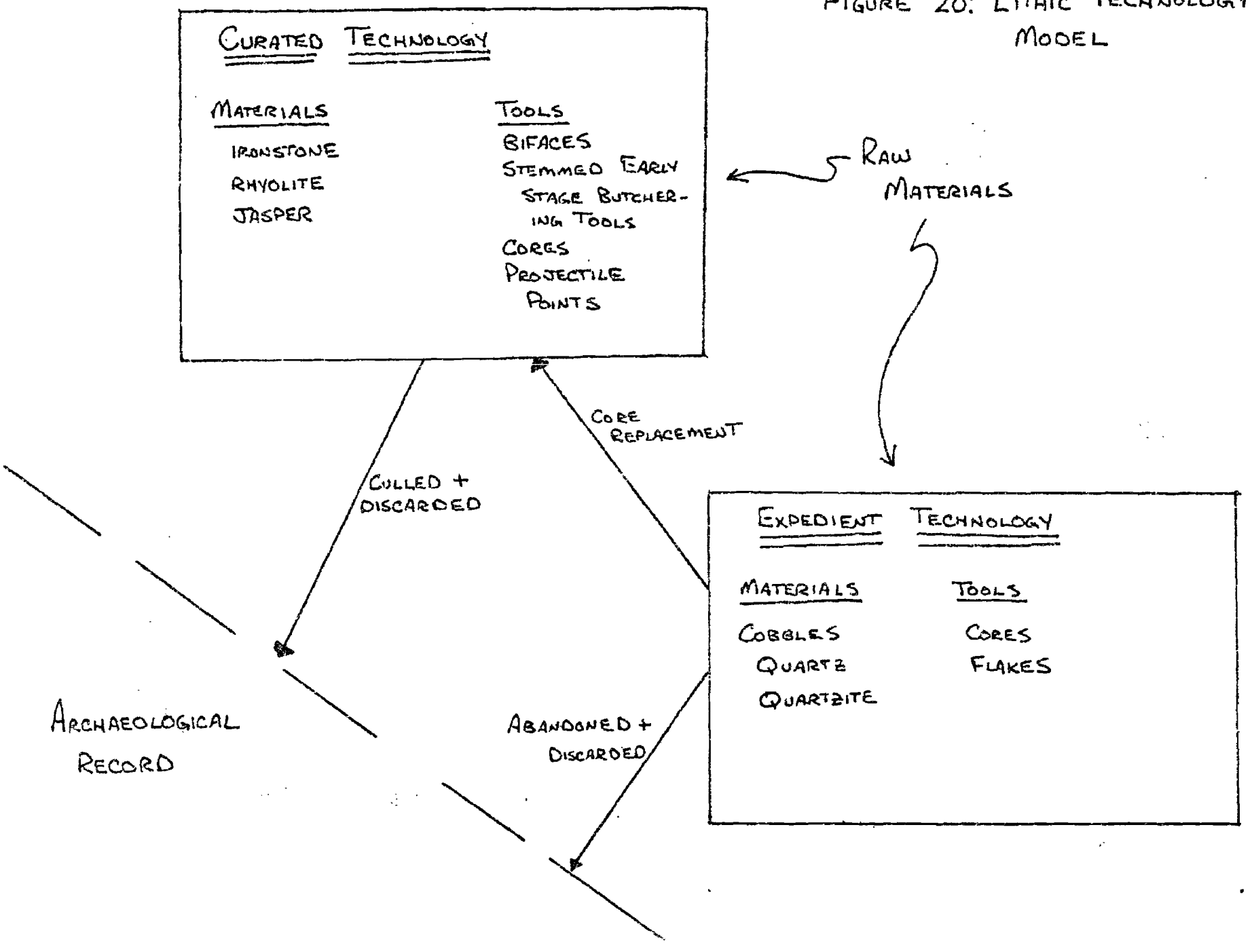

It has already been suggested that there are real problems with using stemmed and notched bifaces as chronological markers and the data from the Hawthorn site (Bachman and Custer 1984)are only one example of these problems. Although some researchers do not care for these findings, it is absolutely clear that many point types viewed as "diagnostic" are not. Furthermore, the Hawthorn data show that several styles of bifaces were in use by a single culture at a single point in time. The varied styles seem to be linked to specific functions and the findings presented here support this contention by demonstrating that the varied biface styles, particularly stemmed and notched points, have different disposal contexts and different functional contexts, not only different functions. Stemmed points are part of a curated technology and notched points seem to be part of an expedient technology. I would suggest that this is why they look so much different and have confused us in the past.

Finally, I would like to note that all of the inferences about artifact spatial patterning described above will be tested by considering refit data and flake size and morphology data. Furthermore, different activity areas from the Hawthorn site will be analyzed using the same methods. Only through this intensive analysis can we come to understand the dynamic nature of stone technological adaptations.

REFERENCES CITED

Bachman, D. C. and J. F. Custer
1984 Use Wear, Projectile Point Morphology, and Activity Areas at the Hawthorn Site (7NC-E-46), New Castle County, Delaware: Chronological Implications. Paper presented at the 1984 Middle Atlantic Archaeological Conference, Rehoboth Beach, Delaware.

Binford, L. R.
1979 Organization and Formation Processes: Looking at Curated Technologies. Journal of Anthropological Research 35:255-273.

1983 In Pursuit of the Past: Decoding the Archaeological Record. Thames and Hudson, New York.

Custer, J. F.
1982 The Prehistoric Archaeology of the Churchmans Marsh Vicinity: An Introductory Analysis. Bulletin of the Archaeological Society of Delaware 13:1-41.

1984 A Contextual Analysis of Woodland I Artifacts Manufactured from Non-Local Materials on the Delmarva Peninsula: Implications for Patterns of Trade and Exchange. In Prehistoric Lithic Exchange Systems in

the Middle Atlantic Region, University of Delaware Center for Archaeological Research Monograph 3, edited by J. F. Custer, pp. 58-72. Newark.

Custer, J. F. and D. C. Bachman
1983 Phase III Data Recovery Excavations of the Prehsitoric Components from the Hawthorn Site (7NC-E-46), New Churchmans Road, Christiana, New Castle County, Delaware. Delaware Department of Transportation Archaeology Series No. 27. Dover.

Custer, J. F., J. A. Cavallo, and R. M. Stewart
1983 Paleo-Indian Adaptations on the Coastal Plain of Delaware and New Jersey. North American Archaeologist 4:263-276.

Custer, J. F., J. H. Sprinkle, A. H. Flora, and M. C. Stiner
1981 The Green Valley Site Complex: Lithic Reduction Base Camp Sites on the Delaware Fall Line. Bulletin of the Archaeological Society of Delaware 12:1-31.

Goodyear, A. C.
1979 A Hypothesis for the Use of Cryptocrystalline Raw Materials among Paleo-Indian Groups of North America. University of South Carolina Institute of Archaeology and Anthropology Research Manuscript Series 156. Columbia.

Gross, J. I.
1974 Some Patterns of Chipping Activity of the Thunderbird Clovis Component. In The Flint Run Paleo-Indian Complex: A Preliminary Report, 1971-1973 Seasons, Occasional Papers of the Catholic University of America Archaeology Laboratory No. 1, edited by W. M. Gardner, pp. 100-105. Washington, DC.

Isaac, G.
1984 The Archaeology of Human Origins: Studies of the Lower Pleistocene in East Africa. In Advances in World Archaeology, Vol. 3, edited by F. Wendorf and A. Close, pp. 1-89. Academic Press, New York.

Ward, H. H. and K. R. Doms
1984 Ironstone Exchange Systems of the Upper Delmarva Peninsula. In Prehistoric Lithic Exchange Systems in the Middle Atlantic Region, University of Delaware Center for Archaeological Research Monograph 3, edited by J. F. Custer, pp. 45-57. Newark.

Table 7: Tool Areas and Area II Sub Areas

	Sub-Area A	Sub-Area B	TOTAL
Cutting, Sawing, Scraping	7	11	18
Projectile Points	1	5	6
Manufacturing	2	5	7
Heavy Cutting	1	3	4
TOTAL	11	24	35