APPENDIX B:

AMERICAN INDIAN COMPONENT

AMERICAN INDIAN COMPONENT

The American Indian component documented at the Jones Site (7NC-J-204) was considered not eligible for the National Register of Historic Places (NRHP) because it lacked sufficient integrity, quantity, and context that would contribute to the research questions established for the State of Delaware for American Indian sites. At the completion of the site evaluation (Phase II), no prehistoric features were identified and only 47 prehistoric artifacts were recovered from 25 shovel tests and 10 test units (Abell and O'Neill 1999). All of the artifacts from the site evaluation were recovered from the plow zone and thinly distributed across the site area without discernable concentrations. Consequently, the American Indian component was not the focus of the data recovery (Phase III) excavations at the Jones Site and no research objectives were defined for this site component. Additional artifacts and six subsurface features were identified during the data recovery, but did not prompt a change to the component's original NRHP eligibility status (Parsons 2000). However, the American Indian component was present and has been summarily described and analyzed and included as an appendix to the Jones Site data recovery report.

Stratigraphy

Sixty-two percent of the prehistoric artifact assemblage was recovered from features (Table 0-1); the majority of the rest of the assemblage was identified on the surface and in the plow zone with only 5 artifacts occurring in sub plow zone contexts.

Table 0-1. Prehistoric Artifact Distribution by Stratum and Features

Provenience	*Count*	*Freq.*
Surface	32	17%
A (plow zone)	36	19%
B (b-horizon)	5	2%
Feature	118	62%
	191	**100%**

Artifacts

In total, 177 prehistoric artifacts were recovered. This total was comprised exclusively of lithic artifacts including formal tools, byproducts of tool manufacture, and thermally altered stone (Table 0-2). Four "untyped ceramics" tentatively identified at the conclusion of the site evaluation (Abell and O'Neill 1999), were reclassified as natural concretions subsequent to more detailed analysis.

Prehistoric artifacts include both chipped stone (i.e., points, bifaces, uniface, flake tools, cores, and debitage) and battered/groundstone (a hammerstone and an axe) (Table 0-2). Lithic materials consist of argillite, chert, jasper, quartz, quartzite, and sandstone (Table 0-3).

Table 0-2. Summary of Prehistoric Artifact Frequencies.

Artifact Type	Count			
	General	Shovel Test	Unit	Feature
Point	3	--	1	2
Early Stage Biface	1	--	--	--
Late Stage Biface	1	--	--	--
Uniface		1	--	--
Flake Tool	1	1	--	2
Core	2	--	--	2
Flake	6	14	12	49
Chip/Potlid	1	4		5
Hammerstone	1	--	--	--
Axe	1	--	--	--
Thermally Altered Stone	17	3	3	58
Total	34	23	16	118
	191			

Table 0-3. Prehistoric Artifacts by Type and Material.

Artifact Type	Argillite	Chert	Jasper	Quartz	Quartzite	Sandstone	Count
Point	--	--	5	1	--	--	6
Biface	--	--	--	2	--	--	2
Uniface	--	--	1	--	--	--	1
Flake Tools	--	--	4	--	--	--	4
Core	--	2	2	--	--	--	4
Flake	1	17	50	10	3	--	81
Chip/Potlid	--	2	3	5	--	--	10
Hammerstone	--	--	--	--	1	--	1
Axe	--	--	--	--	1	--	1
Thermally altered stone	--	3	2	6	46	24	81
Total	1	24	67	24	51	24	191

Chipped Stone Tools

Points. Six points, or point fragments, were recovered from the Jones Site (Figure 0-1). Although, the assemblage was not large enough for meaningful statistical comparisons, basic descriptive data are provided for each point, which may be added to the growing regional database on point typologies (

Table 0-4). As with any point study, the descriptive data represents the tool after its last usage or attempt at retooling (Petraglia et al. 2005). Tool reuse or retouch often alters the original form of the tool (Frison 1968; Flenniken and Wilke 1989; Towner and Warburton 1990; Dibble 1995).

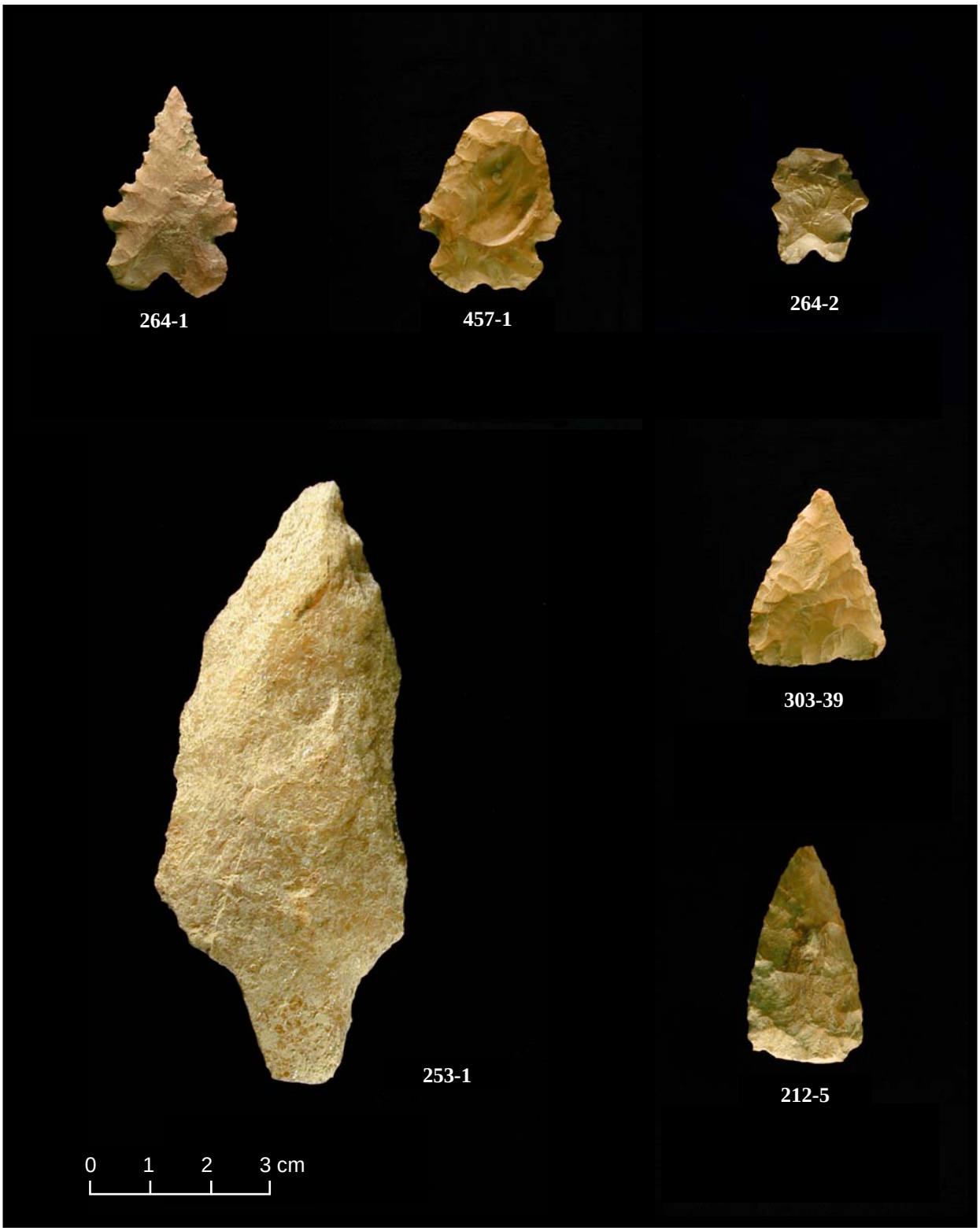

Figure 0-1. Points Recovered from the Jones Site.

Table 0-4. Descriptive Data for Points.

Artifact No.	Type	Material	Length (mm)	Width (mm)	Thickness (mm)	Width:Thickness (mm)	Primary Edge Angle
212-5	blade	jasper	37.3	20.3	7.8	2.6	54
253-1	stemmed	quartz	101.7	43.7	19.6	2.2	62
264-1	bifurcate	jasper	35.6	23.2	6.0	3.9	46
264-2	bifurcate	jasper	20.0	17.3	4.6	3.8	48
303-39	triangle	jasper	29.9	23.6	5.3	4.5	43
457-1	bifurcate	jasper	30.7	24.4	6.1	4.0	44

Five of the six points exhibited identifiable characteristics and could be typed according to accepted morphological styles. Comparative analysis included published metric data from large type collections. This form of data is relatively limited in availability. Where possible, the statistics used in the analysis were derived from data presented in original reports from the type sites for each point type. These entries have been supplemented by data from large published collections, primarily in the Delaware Valley.

Bifurcates. Bifurcates are associated with the onset of the adaptations to the fully emerged Holocene in the Early to Middle Archaic, appearing around 6500 B.C. and lasting only until 6000 to 5500 B.C. (Custer 1989:88). Bifurcates are thin, typically well-made points with triangular blades that are often serrated near the distal end. The distinctive feature is a notched base, producing a bifurcated (literally "forked") appearance. The points are made from a variety of materials but commonly used are high grade cryptocrystalline cherts and jaspers as well as rhyolite (Custer 2001). Broyles (1971) and Kneberg and Lewis (1955) assign a variety of names to these points including LeCroy, St. Albans, and Kanawha, which are usually included in the Early Archaic continuum with other notched varieties. A radiocarbon date of 6300 B.C. was reported by Broyles (1971) in West Virginia. At the Slade site in Tidewater Virginia, LeCroy points have been dated to ca. 6350 B.C. (Egloff and McAvoy 1990).

Bifurcates are widely distributed throughout the eastern United States. LeCroy points are recorded in Georgia, Virginia, Kentucky, Tennessee, Indiana, Illinois, Ohio, Michigan, and Pennsylvania as well as from the Northeast to the Atlantic Coast. St. Albans shares a similar distribution, limited to regions east of the Plains (with a noted similarity to the Pinto Basin type in the west). Kanawha points have also been recovered from sites primarily in the eastern United States, extending well into the south and as far north as Ontario. Two minor types or variations in the LeCroy cluster, the Lake Erie Bifurcated Base and Fox Valley have less extensive distributions and do not occur in the Middle Atlantic region (Justice 1987). Several other minor bifurcate types noted by Custer (2001) and Hranicky (1994) include Culpepper Bifurcate, Limeton Bifurcate, MacCorkle, Muncy Bifurcate, Nottoway River Bifurcate, and Rice Lobed.

Broyles (1971:69) reported lengths ranging from 19 to 35 mm and widths from 16 to 28 mm on samples from West Virginia, while Chapman (1975:125-6) reported lengths from 16 to 36 mm (mean 26.5 mm) and widths from 18 to 26 mm (mean 20.7 mm) on a sample from Tennessee. Holland (1970) reported figures from southwest Virginia that were similar to Chapman's: length 25 to 40 mm, width 20 to 25 mm. More recently, McAvoy and McAvoy (1997:appx A) reported

specimens 15 to 35 mm in length, 15 to 25 mm wide, and 3 to 6 mm thick at the Cactus Hill site, on the Inner Coastal Plain of southeastern Virginia. A sample of 4 LeCroys from the Trenton Complex in the middle Delaware Valley measured 29 to 45 mm in length, 21 to 27 mm in width, and 4 to 8 mm in thickness (Wall et al. 1996:94). The three examples from the Jones Site were small and dimensions were within the lower range of the established measurements (Figure 0-1).

Triangles. Triangle points are associated with the Late Woodland Period, although some occur in the Middle Archaic. Radiocarbon dates in the Middle Atlantic region date the points to the period between A.D. 1000 and A.D. 1600. Recent studies indicate that triangle points were also used in the Middle Archaic (Stewart 1998) although distinguishing between these point types is difficult (Custer 2001).

Most triangle points may represent the only true arrow points in the Middle Atlantic. With the possible exception of Jack's Reef points, all other types are likely spear points. Triangle points are manufactured from quartz, jasper, and chert. These points are distinguished by a simple triangular shape, and include several variants (Custer 2001).

Of the various types of triangular points, Levanna and Madison are distributed across portions of the Middle Atlantic including Delaware. Diagnostic of the early Late Woodland, Levanna points are prevalent from around A.D. 700-900 to about 1200. Early radiocarbon dates (A.D. 600-800) for Levanna points in the area of the Great Lakes support the proposition that the technology is derived form the Jack's Reef Pentagonal type. Levanna points have been recovered from sites throughout New England, extending to the coast and as far south and west as southwest Virginia, West Virginia and Pennsylvania. Farther south, the type may overlap with the Yadkin type, identified for the piedmont region in the Carolinas (Justice 1987). In the Northeast, the Madison type replaces the Levanna type by about A.D. 1350. The Madison point type is common throughout the eastern United States associated with various Late Woodland and Mississippian cultural phases dating from between A.D. 800 to the Historic period (Justice 1987). Variants of the triangle point include: Buzzard Roost, Clarksville, Fort Ancient (limited distribution, not Middle Atlantic), Hamilton Incurvate, Levanna, Madison, Potomac, Roanoke Triangle, Yadkin Triangle (Custer 2001; Hranicky 1994).

A sample of 250 Levanna points was reported by Ritchie (1971:31) with lengths ranging from 22 to 76 mm (most between 32 and 45 mm), widths from 21 to 35 mm, and thicknesses averaging 5 mm. Kinsey (1972:441-442) reported examples from the upper Delaware Valley with lengths ranging from 18 to 45 mm (mean 34), widths from 18 to 34 mm (mean 22), and thicknesses from 3 to 5 mm (mean 4). The single specimen from the Jones Site was small and its dimensions were within the lower range of the established measurements.

Retouch. All six of the points recovered exhibited bifacial retouch on at least one blade edge. However, macroscopic inspection of the points failed to identify specific use wear on any of the examples. Artifact #264-1 (Figure 0-1) exhibited extensive re-sharpening off the haft, while Artifact #303-39 (Figure 0-1) displayed resharpening while it was hafted, indicated by an alternate bevel of the tip. Artifact #457-1 (Figure 0-1) was the only point that still contained remnant cortex on any of the surfaces, suggesting manufacture from a cobble or pebble source and not a prepared flake blank. Of the bifurcate examples, only Artifact #264-1 (Figure 0-1)

displayed a serrated blade. No blade information was available for Artifact #264-2 (Figure 0-1), which was only comprised of the proximal end, the base and shoulders.

The presence of three bifurcate points is significant, especially as two were recovered from within the same basin, Feature 157 (see further discussion of features below). The points would suggest a largely Archaic Period component for the American Indian artifact assemblages. Such an interpretation is strengthened by the lack of ceramic artifacts at the site, but is by no means a definitive statement of a limited component site, especially with the presence of a Late Woodland triangle point.

Bifaces. Bifaces are typical artifacts among American Indian artifact assemblages. At the Jones Site only two were recovered, each representative of the two broad types of bifaces: early stage and late stage, which refers to their stage in the reduction process. Biface artifacts may represent finished tool forms, rejections from the reduction process, or incomplete tools that may display some evidence of use. The determination of reduction stage of the artifacts was based on somewhat subjective criteria thought to represent the level of completion in relation to various experimental replication models. The attributes included overall appearance, degree of shaping, thickness, and edge profiles.

Early stage bifaces represent the initial stages of reduction from a flake blank or cobble core. Flaking patterns on these artifacts are typically random and exhibit wide and deep flake scars. Artifact #303-41 (Figure 0-2.) from the Jones Site, the only early stage biface recovered, showed some battering on its edges, likely related to initial reduction attempts. It measured 73.2 mm in length, 43.9 mm in width, 25.6 mm in thickness, had a width:thickness ratio of 1.7 mm, and a primary edge angle of 76 degrees. The artifact was quartz and represented a worked or tested cobble, and did not display much evidence for shaping or further flake reduction. Cobble cortex remnant was noted on the artifact.

Late stage bifaces typically exhibit more indications of intentional shaping, greater flake reduction, including more patterned and prepared platforms. Furthermore, they may also exhibit evidence of bifacial edge thinning and/or use-wear patterns. Artifact #303-40 from the Jones Site was a quartz, distal midsection, and represented the only late stage biface recovered. The dimensions of the recovered fragment: length of 15.9 mm; width of 12.4 mm; thickness of 6.1 mm; width:thickness ratio of 2.0 mm; and a primary edge angle of 52 degrees. This artifact did not display any evidence of use and due to its fragmentary condition and material type, flaking patterns could not be discerned. Remnant cobble cortex was not present on this artifact.

Uniface. Uniface artifacts represent another type of chipped stone tool, and like bifaces, may represent specific tool forms or discarded pieces from the reduction process. The term uniface relates to the type of flake removal, that is, from only one of the faces of the artifact and on a minimum of at least one edge. At the Jones Site, only one uniface artifact was recovered, Artifact #416-1. The artifact was made of jasper and displayed unifacial micro-flakes and minimal rounding. It measured 20.0 mm in length, 20.5 mm in width, 7.6 mm in thickness, had a width:thickness ratio of 2.7 mm, and a primary edge angle of 70 degrees. The secondary edges were concave and one had bifacial retouch and possible haft preparation, while the other

exhibited unifacial platform crushing. Some possible remnant cobble cortex was noted, and the artifact was a prime example of a finished uniface tool, in this case, an endscraper

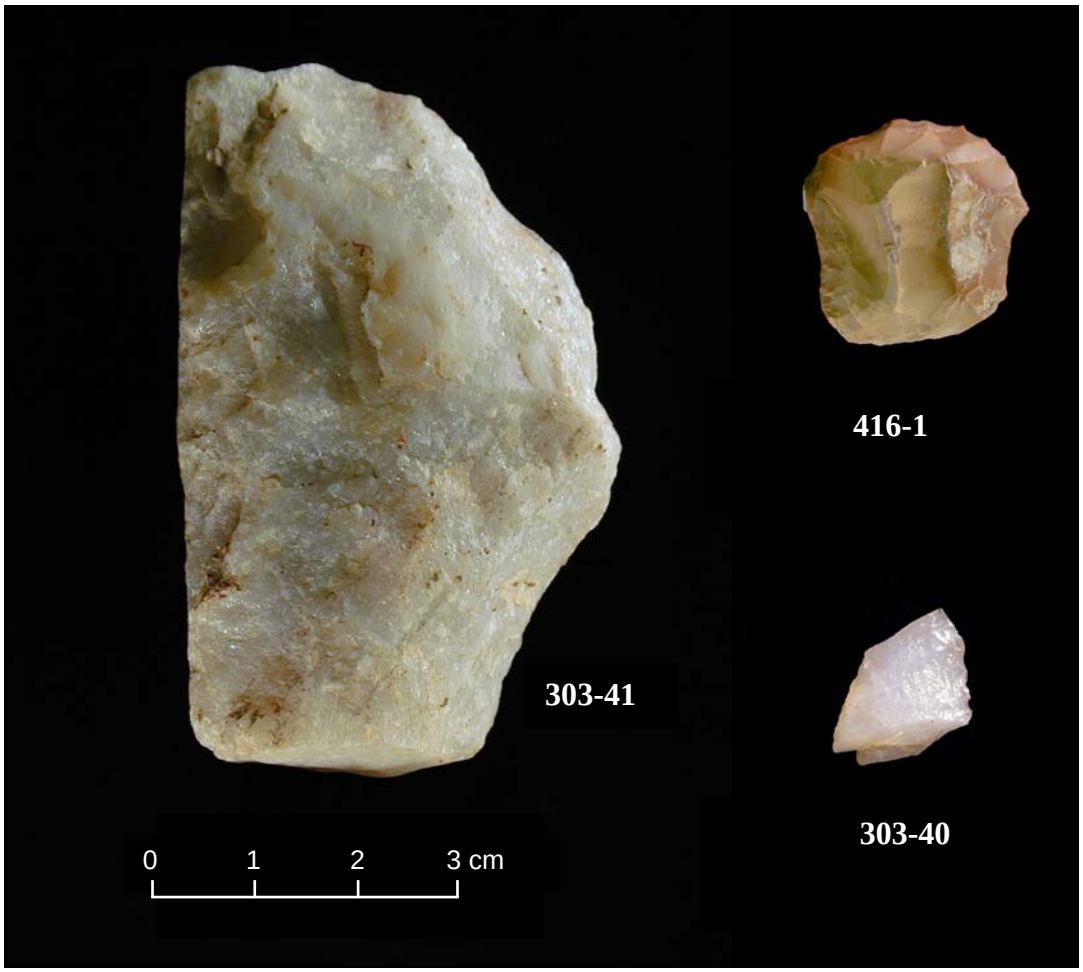

Figure 0-2. Early Stage Biface (303-41), Late Stage Biface (303-40), and Uniface (416-1).

Flake Tools. Within the debitage assemblage, four flakes showed evidence of possible retouch or use during macroscopic visual inspection. Flakes of sufficient quality could be used as expedient tools for limited cutting and/or scraping activities. Retouched flake tools were typically characterized by margin flake scars at least 3 mm in length perpendicular to the flake edge and exhibiting minimal shaping along the flake perimeter. Whereas, utilized flake tools were identified by the presence of use/wear along the edges as indicated by the presence of various types of edge degradation or modification: microflake removal, polish, rounding, or blunting. For both flake tool types, edge use is the primary focus rather than formal shaping of the flake perimeter. Summary dimensional data including length, width, thickness, and recorded for the flake tools recovered from the Jones Site (Table 0-5).

Table 0-5. Descriptive Data of Flake Tools

Artifact	Type	Material	Length (mm)	Width (mm)	Thickness (mm)	Primary Edge Angle
248-1	retouch	jasper	27.7	20.1	5.1	70
264-3	utilized	jasper	52.7	20.6	9.2	29
303-43	retouch	jasper	25.1	27.5	9.4	69
452-3	retouch	jasper	17.0	18.2	10.6	79

All of the flake tools were manufactured from jasper material, which suggested a maximization of the use of higher quality cryptocrystalline material. All of the retouched flakes exhibited unifacial microflake removal and the utilized flake was also characterized by unifacial microflakes. Use-wear was considered marginal for Artifacts #264-3 and #303-43. Conversely, Artifact #248-1 was characterized as an expedient thumbnail scraper and had a partially serrated edge, while Artifact #452-3 displayed a pointed, possible scraping edge. The combination of edge angle and use-wear suggested various scraping activities, light to heavy, for all but Artifact #264-3, which was more likely used for light cutting activities (Carmichael 1985). Two of the artifacts (#248-1, #264-3 [Figure 0-3.]) retained some remnant cobble cortex while the other two (#303-43, #452-3) did not, which suggested opportunistic use rather than specific selection for interior or exterior flakes.

Figure 0-3. Flake Tool with Remnant Cobble Cortex.

Cores. Cores represent the parent material from which flakes are removed in the reduction sequence for the manufacture of lithic tools. There are generally two types of cores that are divided based on the visible flake removal pattern: multi-directional or bipolar. Multidirectional cores are defined by exhibiting non-specific flaking patterns that occurred from multiple striking platforms. Bipolar cores are the byproduct of a bipolar reduction strategy, which utilizes a hammerstone to strike the core that is placed on an anvil stone. Crushed proximal and distal ends that result from the force generated with this reduction technique, identifies this type of core.

Four cores were recovered from the Jones Site, all of which were multidirectional. Mostly, these cores represented tested pebbles and flaking was opportunistic to examine if the pebble was suitable for stone tool manufacture. All of the examples exhibited remnant cobble cortex on at least one surface. Two of the cores, were jasper and two were chert, which tentatively suggests a selection for cryptocrystalline material.

Summary dimensional measurements including size grade and weight were recorded for the core assemblage (Table 0-6). The artifacts showed variation that is expected given these pieces represent materials that were rejected from further lithic reduction, and in many cases, only exhibited initial test flaking. However, there was a slight tendency for similar size grades, which may represent either selection preference or availability.

Table 0-6. Descriptive Data of Cores.

Artifact Number	Type	Material	Size Grade	Weight (g)
157-1	multidirectional	jasper	4	4.5
265-1	multidirectional	chert	5	42.9
303-42	multidirectional	chert	5	22.6
441-3	multidirectional	jasper	6	112.4

Debitage. Debitage represents the common byproduct of lithic reduction and may be formed from primary tool manufacture, re-sharpening, or edge modification. The group was separated into two basic categories: flakes and chips. Flakes were defined by the presence of identifiable attributes such as percussion bulbs, platforms, flake scars, and feather, snap, or hinge terminations. Chips, also commonly referred to as shatter, represented small angular pieces of lithic material with no identifiable flake attributes. At the Jones Site, a total of 90 pieces of debitage was recovered: 81 flakes and nine chips (Table 0-7).

Table 0-7. Debitage Size and Lithic Material Type.

Material	<1 cm	1-2 cm	2-3 cm	3-4 cm	4-5 cm	5-6 cm	>6 cm	Total
Argillite	--	--	--	--	--	--	1	1
Chert	--	1	12 (5)	4 (3)	1 (1)	1	--	19 (9)
Jasper	--	5 (1)	34 (14)	9 (5)	4 (4)	--	1 (1)	53 (25)
Quartz	1	2	5	2	1 (1)	--	4 (2)	15 (3)
Quartzite	--	--	2(1)	1	--	--	--	3 (1)
Total	1	8	53	16	6	1	6	91 (38)

(n) denotes frequency with cortex

The debitage artifact assemblage from the Jones Site was relatively small, which in itself is suggestive of limited reduction activities occurring at the site. However, again this is a tentative conclusion based upon the recovery methodology, which was non-systematic for the limited American Indian component of the site. The debitage artifacts suggest a preference for cryptocrystalline materials, which accounted for 76 percent of the debitage: jasper with 58 percent and chert with 21 percent. This preference is consistent with the chipped stone tools, which although limited in number, also favored cryptocrystalline materials. The debitage size grades trended toward the smaller end of the scale with the majority (58 percent), being between 2 and 3 cm in maximum dimension. The overall trend of small total numbers, cryptocrystalline material preference, and small size grades is suggestive of limited lithic reduction most likely related to tool maintenance or re-sharpening activities. However, the inclusion of some larger pieces of debitage hints at the possibility of additional behaviors at the site, such as tool manufacture. Remnant cobble cortex was identified on 42 percent (n=38) of the debitage artifacts, also suggesting some tool manufacture and not just maintenance or finishing.

Battered/Ground Stone Tools

Two battered and/or ground stone tools were recovered from the Jones Site: Artifact #429-1, a hammerstone and Artifact #259-1, an axe. These types of artifacts could be used for a variety of purposes including: battering, abrading, grinding, and pecking; additionally, the axe could be

used for wood-working activities. Battered and ground stone tools are typically manufactured from whole or nearly complete cobbles, and may range in size, likely dependent upon resource availability or intended function. Both artifacts from the Jones Site were manufactured from nearly complete cobbles of coarse-grained quartzite material.

The hammerstone, Artifact #429-1 (Figure 0-4.) was defined by the presence of a battered edge or end. The battered end on this artifact was also slightly rounded, giving the artifact a rounded-triangular shape. The two faces of the artifact displayed marginal, if any, use-wear under macroscopic visual inspection. Although possible polish or staining was noted on one face, which may have been the result of being repeatedly handled. The artifact weighed 225.5 g and was 78.8 mm long, 75.0 mm wide, and 25.7 mm thick.

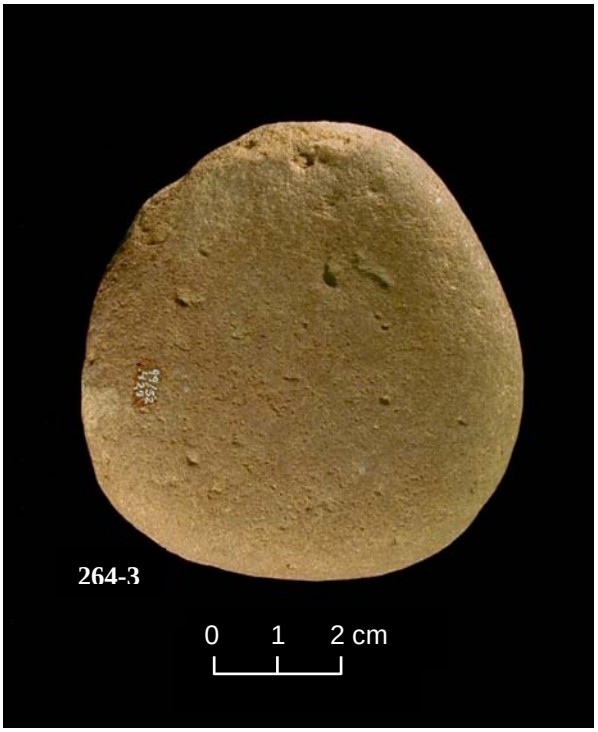

Figure 0-4. Hammerstone with Battered End.

Artifact #259-1 (Figure B-5), the ground stone axe represented an artifact type not commonly found in small artifact assemblages. The artifact exhibited two abraded faces related to the tool manufacture and not specific use-wear. One face contained a slight recess, while the other had a linear abrasion, which taken together suggested haft abrasion. The perimeter of the artifact had evidence of shaping as the natural rounded edges of the stone had been flattened and one of the ends was bifacial. Macroscopic visual inspection did not identify any specific use-wear for the artifact. The hafted-axe weighed 466.3 g, and was 124.1 mm long, 94.1 mm wide, and 24.8 mm thick.

The presence of both a hammerstone and an axe suggest that a slightly wider range of activities may have occurred at the Jones Site during different occupations. However, given the lack of integrity of the soil deposits, it was not possible to associate these artifacts with a specific occupation component, either the Archaic or Woodland Periods. The artifacts are good examples of their type and may provide further data for comparative purposes.

Figure 0-5. Axe with Abraded Faces.

Thermally Altered Stone

Thermally altered stone artifacts may include all variations of heated stone such as fractured fire-cracked rock, reddened or discolored pebbles and cobbles, stones that have crazed surfaces but have not fractured from heat, and potlids. These artifacts are typically associated with a wide range of functions and feature types, for example stone boiling, rock-lined hearths, and warming fires. Since the Jones Site American Indian component was considered not eligible for the NRHP, detailed and systematic characterization of the thermally altered stone artifacts was not conducted. Table 0-8 provides summary data of the thermally altered stone artifacts from the Jones Site including total count, material type, and gross weight.

Table 0-8. Thermally Altered Stone Frequencies.

Material	Count	Weight (g)	Mean Weight(g)
Chert	3	8.8	2.933
Jasper	2	2.5	1.25
Quartz	6	4,654.0	775.667
Quartzite	46	31,207.0	461.022
Sandstone	24	15,509.3	646.221
Total	81	51,381.6	

The thermally altered stone assemblage was relatively small having a total of only 81 artifacts. Interestingly, 57 percent of the thermally altered stone artifacts were quartzite, which suggests a selection preference for quartzite in thermal features. This finding is consistent with other thermally altered stone studies conducted in the state, which have also demonstrated similar higher frequencies of quartzite artifacts (e.g., Bowen and Knepper 2003; Petraglia et al. 2005; Custer and Silber 1995; Cavallo 1987). Conversely, the low percentages of cryptocrystalline materials (chert and jasper) at 9 percent, suggests avoidance of using such material for thermal uses. The low overall frequency of thermally altered stone artifacts suggests that thermal related activities were limited at the Jones Site.

Summary

The artifact assemblage considered in whole, was interesting despite the relatively small numbers of artifacts recovered. Most conspicuous was the lack of ceramics in the assemblage; however, in examining the point forms the absence of ceramics could be expected given the Archaic point types recovered. The percentage of formal tools within such a small assemblage, at 6 percent (n=11), and the nearly 1:10 ratio of chipped stone tools to debitage, also was noteworthy. In addition, the lower proportion of thermally altered stone to chipped stone artifacts suggested a more transient occupation of the site.

Features

In the course of archaeological investigations at the Jones Site, three features of probable American Indian origin were identified; Features 157, 197, and 199. An additional three features (Features 114, 145, and 160) that were identified were tentatively thought to be of American Indian origin, but their origin remains inconclusive for various reasons stated below. All six features will be presented with summary descriptive data including dimensions, plan view shape, profile form, soil characteristics, inclusions (artifacts and/or natural), and possible interpretation. All of the features at the Jones Site were identified at the plow zone interface within the subsoil (b-horizon) after mechanical stripping, and all depths recorded were from below the plow zone.

Feature 114 was a basin feature located in north-central portion of Block A. It had been partially truncated by the plow zone and disturbed by a historical post (Feature 114A). It measured approximately 250 cm long, 70 cm wide, and 47 cm in depth below the plow zone. In plan view, the feature was oblong shaped, having a much greater long axis comparative to the short axis (Figure B-6). The profile of the short axis exhibited steeply tapering side walls and a rounded bottom. The long axis profile was more undulated; gently tapering on one end and steeply tapered on the other. The feature was comprised of yellowish brown sandy loam. The feature matrix and subsoil interface was variable throughout the feature. It was well defined on the northeast end, while at the southwest end of the feature, the interface was much more gradual and difficult to detect. The only artifacts recovered from the feature were two historical brick and slate fragments. Although the feature was fully excavated, its origins remained unclear, due in part to the inclusion of historical architectural artifacts, and in part to the indistinct feature form. The gradual transition from feature matrix could be the result of continual weathering, which may have been different than the other portion of the feature that exhibited more defined boundaries, perhaps due to enhanced groundwater fluctuation. Alternatively, the feature may represent a natural localized discontinuity in the soil profile.

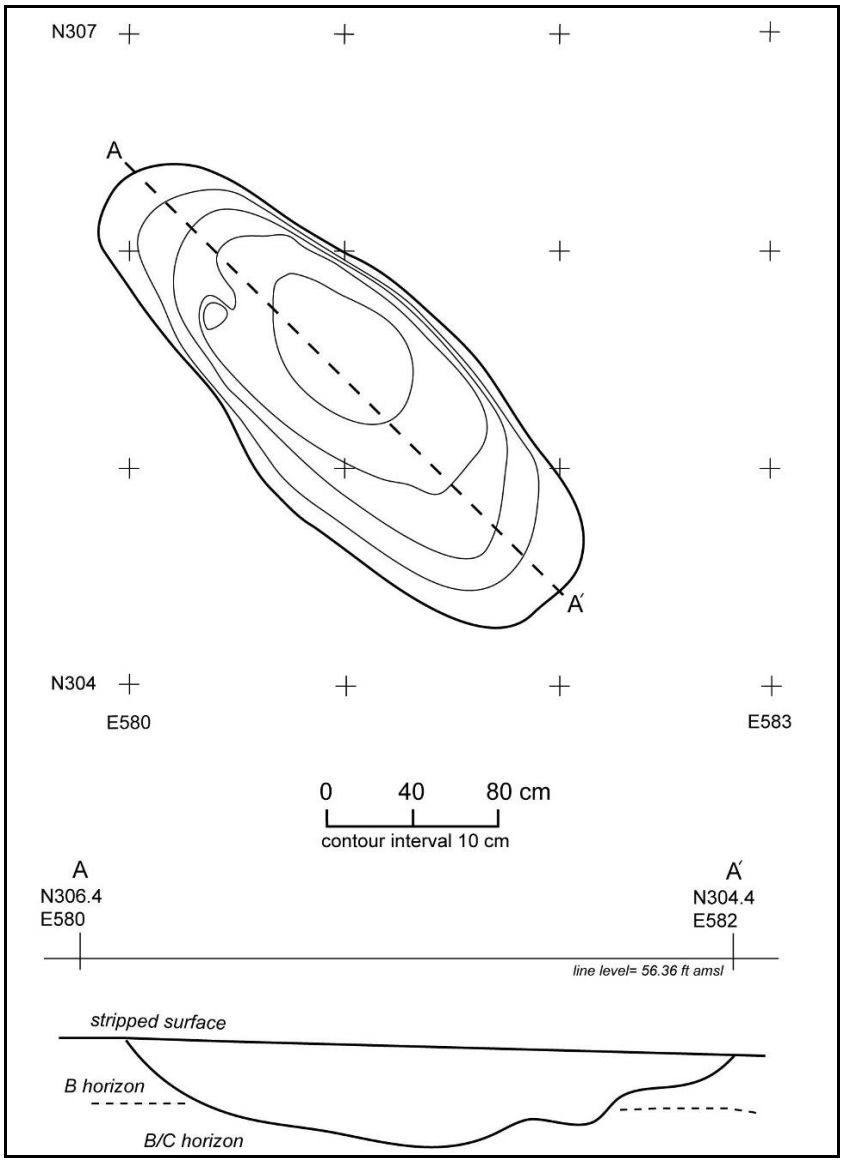

Figure 0-6. Planview and Profile of Feature 114.

Feature 145 was a basin feature located in west side of Block A. The feature had been truncated by the plow zone and initially described as a "scorched area surrounded by B-horizon," because of the increased amount of visible charcoal noted on its surface in a concentrated sub-ovoid area. Its opening plan view dimensions measured 100 cm x 75 cm. Upon excavation, the measurements were revised to 250 cm in length, 150 cm in width, and 106 cm in depth, and it was noted that the "scorched area" was part of the feature matrix as was the immediately surrounding soil.

In plan view, the feature was sub-ovoid in shape, with one flat side and the remainder rounded. The long profile exhibited one steeply sided tapering to an undulated bottom, to a more gradually tapering side. Whereas the short axis profile was more steeply tapered on both sides and terminated at a more pointed bottom (Figure B-7). The feature was comprised of yellowish brown to dark yellowish brown loamy sand. The initial plan view and interfaces were vague and

often difficult to determine, as the feature matrix gradually blended into the subsoil horizon with diffuse transitions. The feature contained one small quartz flake, some charcoal flecks, and at least one brick fragment, although several other smaller brick examples were noted but not collected. The mixture of historical and prehistoric artifacts coupled with the largely indistinct feature edges, suggest a likely natural origin for this feature, although it still may have been utilized culturally for non-specific purposes. In either case, the indistinct transitions and leached soil appearance, suggest the feature has undergone substantial weathering.

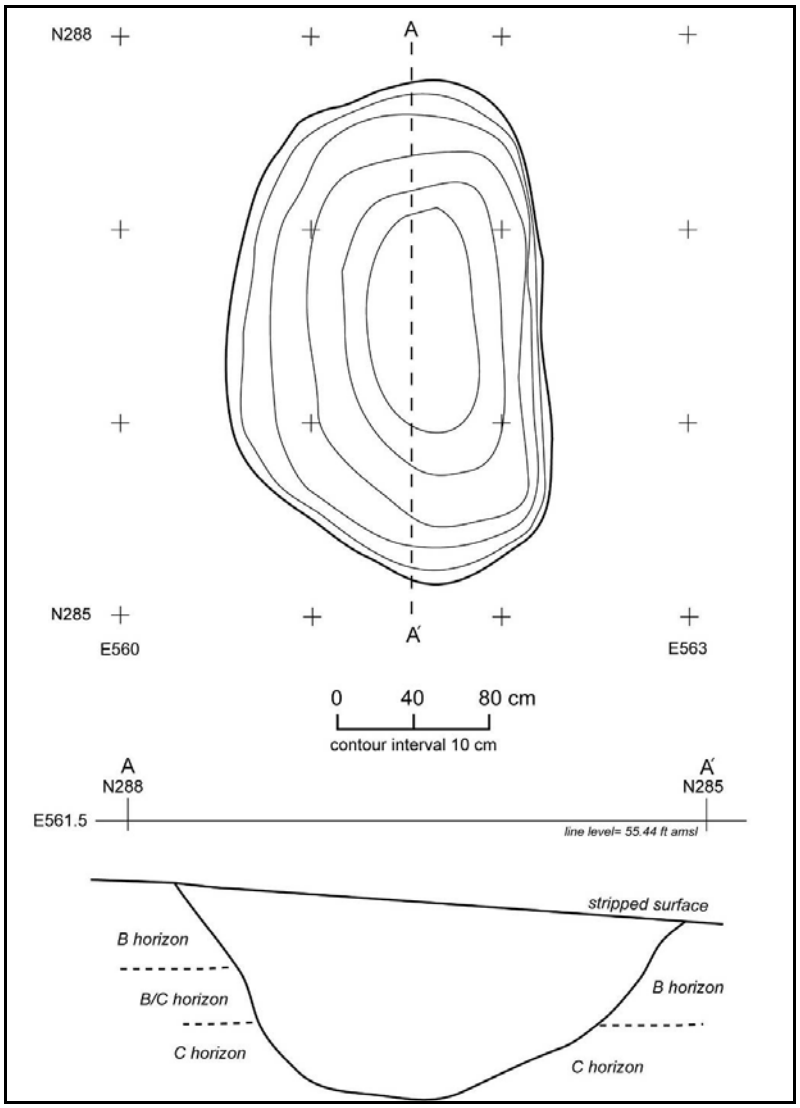

Figure 0-7. Planview and Profile of Feature 145.

Feature 157 was a large basin feature of probable American Indian origin located in the southeast portion of Block B. The feature had been truncated by the plow zone and was identified with a core fragment at the plow zone interface. The initial plan view dimensions measured 150 cm east to west and 100 cm north to south. These dimensions were revised after excavation to 275 cm east to west and 150 cm north to south. The feature was 56 cm in depth from the base of the plow zone. The feature had a generally ovoid plan view shape, although the edges tended to become variable with depth. The profile of the short axis showed steeply

tapered sides to a mostly flat bottom. The long axis profile contained more variation, and was gradually tapering on the sides, to a slightly undulated bottom that also contained a small indentation with a flat bottom near the center of the feature (Figure B-8). The feature contained several soil types. Stratum I was found across the entire western half of the feature and the top approximately 20 cm of the eastern portion of the feature. It was dark yellowish brown loamy sand. Stratum II was a more organic and darker colored grayish brown to yellowish brown loamy sand, found in a pocket toward the center of the feature. Stratum III was a mottled pale brown loamy sand matrix surrounding Stratum II and below Stratum I. These feature strata had diffuse but visible interfaces with each other, but remained distinct from the surrounding B-horizon. However, the northeast feature boundary was less distinct as it interfaced with a transitional E/B-horizon, and the matrices were similar. A small, undetermined disturbance also was noted in this same corner of the feature, as was another at the north border in the western portion of the feature.

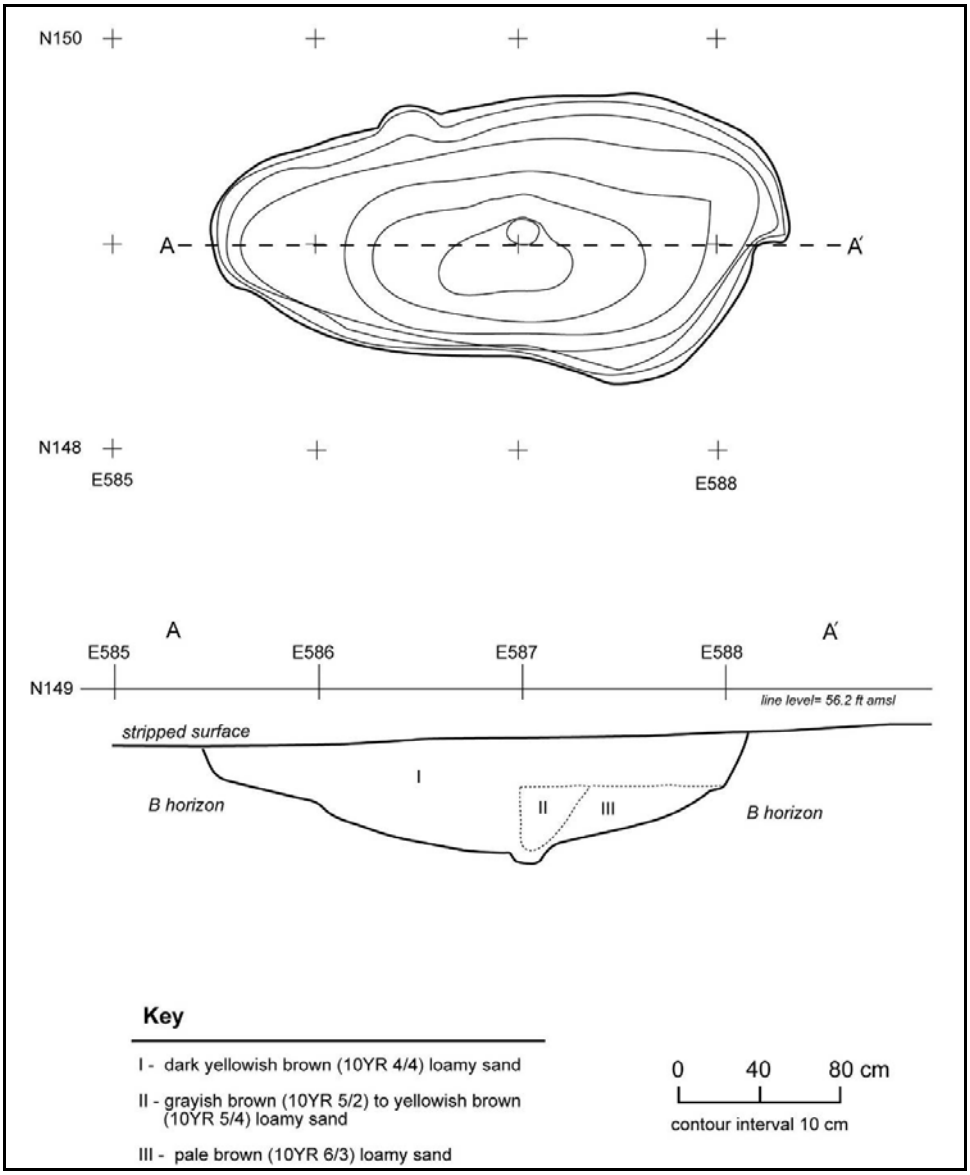

Figure 0-8. Planview and Profile of Feature 157.

Feature 157 contained a total of 41 prehistoric artifacts. These included two bifurcate base points, one utilized flake, one core, and 37 debitage. Stratum I of the feature contained the highest number of artifacts with 29 (Table B-9). However, Strata II and III both contained artifacts as well, with four and eight respectively. No historical artifacts were recovered from the feature. Feature 157 also contained large, visible charcoal flecks. In general, the feature had many characteristics consistent with large basin features including regular form and artifacts. The inclusion of bifurcate points was inconsistent, due to their Archaic Period association, which predates basin features in Delaware (Custer 1994:48). However, these pieces may represent an earlier occupation and were deposited into Feature 157 during its original excavation or susequent infilling. Or alternatively, they may be 'heirloom' or scavenged pieces deposited by later inhabitants of the site area.

Table 0-9. Artifact Distribution by Stratum for Feature 157.

Stratum	Count	Freq.	Temporal Diagnostics
I	29	71%	bifurcate points
II	4	10%	none
III	8	19%	none
Total	41	100%	

Feature 160 was a large, basin feature located in the east-central portion of Block B, approximately 15 meters north of Feature 157. The feature had been truncated by the plow zone and the initial plan view identification was partially obscured by the E/B-horizon that surrounded the feature and a rodent disturbance along the northeast corner of the feature. The initial feature dimensions measured 170 cm in length and 72 cm in width. After excavation, the feature dimensions were revised to 380 cm in length, 160 cm in width, and 52 cm in depth. In plan view, the feature exhibited a kidney shape, with indistinct boundaries to the north and east (Figure B-9). The long axis profile revealed steeply tapered side walls and variably undulated base, with two deeper portions separated by a shallower median. The short axis profile showed one steeply sloping side and one more gradually tapered side, with a rounded bottom. This profile also revealed the presence of multiple soil strata within the feature. Stratum I consisted of brownish yellow loamy sand, and occupied the area of the opening plan view dimensions. Stratum II was slightly lighter yellowish brown loamy sand that surrounded Stratum I and made contact with both the E/B-horizon and Stratum III. Stratum III was found variably on the northern portion of the feature and separated Stratum II from the B-horizon. Stratum III was comprised of a brownish yellow mottled with yellowish brown compact loamy sand. One jasper flake and one quartzite thermally altered stone were recovered from within the feature, both found in Stratum II. No significant increase of visible charcoal flecks was noted for the feature.

The origin of Feature 160 was not definitive, although it contained two artifacts and shared characteristics with large basin features. The indistinct feature edges, noted disturbance, and variable base morphology were more suggestive of natural formation processes (Petraglia et al. 2005). Stratum II and III that surrounded the initial feature matrix were likely natural strata partially stained by sediments leaching from Stratum I and slightly less compact than the surrounding horizons due to the feature and its associated disturbance.

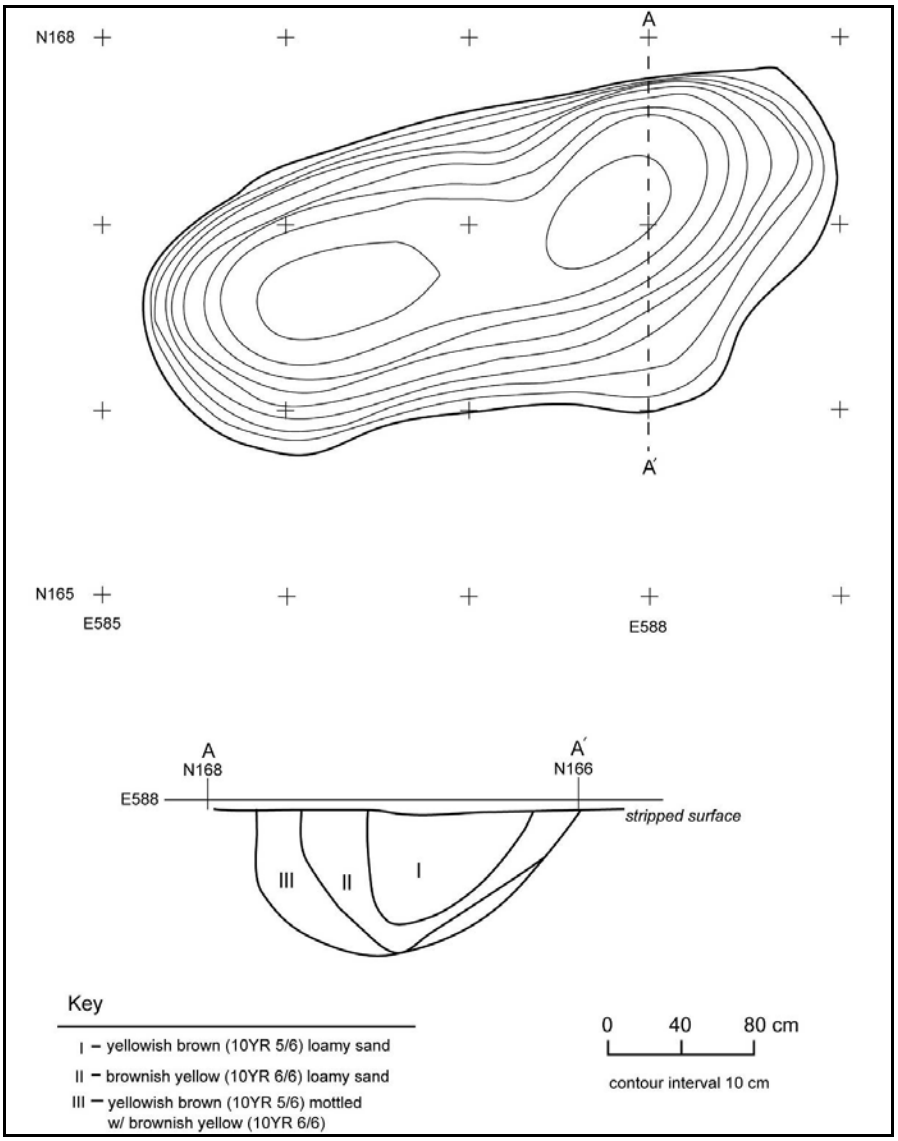

Figure 0-9. Planview and Profile of Feature 160.

Feature 197 was a large basin of probable American Indian origin located near the center of Block B, north and west of Feature 157. The feature was truncated by the plow zone, but maintained distinct edges from the surrounding B-horizon. The feature measured 348 cm in length, 120 cm in width, and 84 cm in maximum depth. In plan view, the feature exhibited an elongated, oblong shape that was slightly curved to the northeast (Figure B-10). The long axis profile revealed regular tapered walls to a generally flat bottom, while the short axis profile exhibited steeply tapered walls and a nearly level bottom. The feature was comprised of several distinct soil strata all darker in color than the surrounding B-horizon. Stratum I was dark yellowish brown loamy sand that contained a high amount of visible charcoal flecks. Stratum II was slightly mottled yellowish brown, compact and moist, loamy sand with visible charcoal flecks in lesser concentration than Stratum I. Stratum III consisted of a brown loamy sand that was even moister than Stratum II and contained the highest concentration of large, visible charcoal flecks. However, no artifacts were recovered from within the feature. Rodent tunnel

disturbances were noted, primarily in Stratum I of the feature and may have impacted additional areas as well, as the east wall of the feature was the least distinctive.

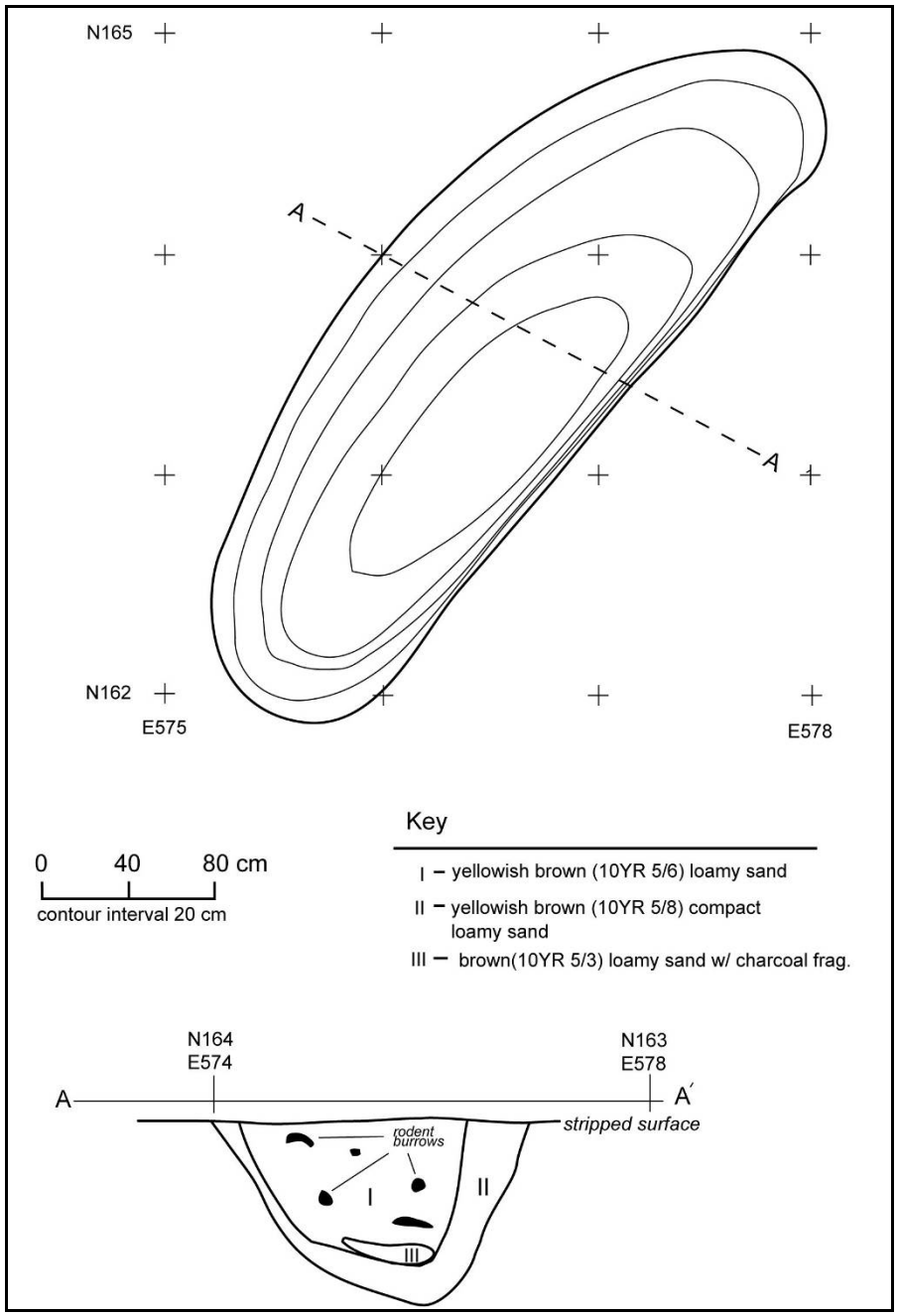

Figure 0-10. Planview and Profile of Feature 197.

Although Feature 197 contained no artifacts and displayed some degree of natural disturbance, its origin was likely related to American Indian practices. The plan view shape remained fairly consistent from its opening to its final excavated form, the profiles exhibited regularity, and the soil contained a high degree of organic materials, especially large charcoal flecks. The function of large basin features remains in debate, but Feature 197 had several indicators of cultural interaction.

Feature 199 was a medium shallow basin of probable American Indian origin, located along the west edge of Block B. The feature was truncated by the plow zone and its upper portions were obscure due to contact with the surrounding E/B-horizon and a possible historical disturbance along the east edge of the feature. The dimensions of the feature were length of 160 cm, width of 108 cm, and depth of 48 cm. The plan view shape was ovoid and regular, with only slight intrusion noted on the eastern edge. The short axis profile revealed regular, smooth sides and a rounded bottom. The long axis profile also was generally regular, with gradually tapering sides that terminated at a slightly recessed level bottom, which was different from the short axis (Figure B-11). The feature was comprised mostly of dark yellowish brown loamy sand, with the bottom-most portion being slightly lighter colored yellowish brown loamy sand. The darker soil contained visible charcoal flecks, while the lighter colored soil contained increased gravel content. Except for the uppermost portion, as noted above, the walls and the bottom of the feature were distinct and regular. A single jasper flake was recovered from within the feature.

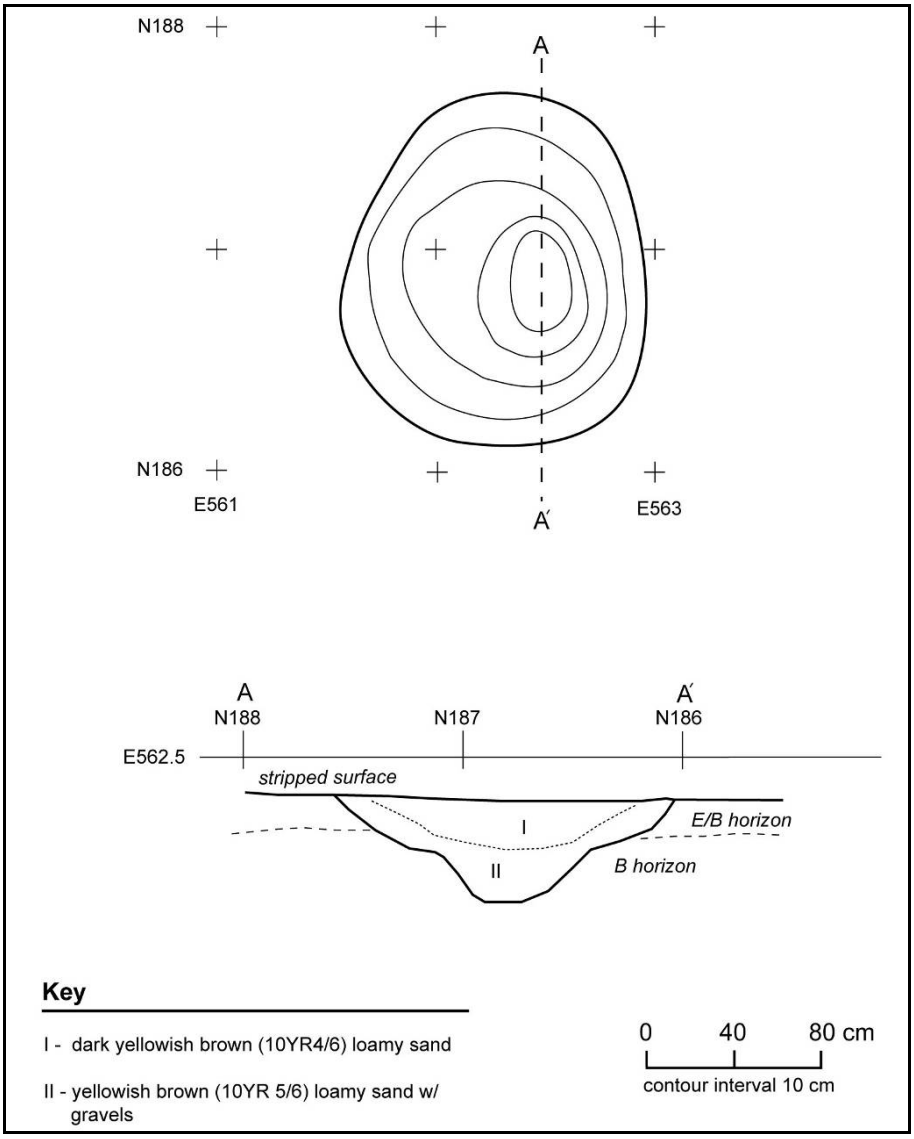

Figure 0-11. Planview and Profile of Feature 199.

Several attributes of Feature 199 were consistent with characteristics of medium basin features common in the State of Delaware. Although it contained only a single artifact, the feature maintained a clear and distinct form in both plan view and profile, and contained a higher concentration of charcoal flecks than the surrounding horizon. Feature 199 was slightly disturbed along one edge and by the plow zone, which partially obscured its clear definition. Additionally, the bottom of the feature has begun to show signs of leaching likely due to groundwater movement and fluctuations, resulting in the slightly lighter color. Basin features of this size and depth have been noted at other sites, and although their exact function remains in debate, they had cultural interactions.

The pit or basin features provide an interesting component to the Jones Site. Basin features are common in the State of Delaware and the focus of some debate as to both their origin and function (e.g. Custer et al. 1994; Custer and Silber 1995; Mueller and Cavallo 1995; Petraglia et al. 2005). The three basins at the Jones Site that display the most likely cultural origin, Features 157, 197, and 199, add an important element to the interpretation of the American Indian component. The presence of cultural basin features, despite whichever functional interpretation is chosen (storage, habitation, or ritual), suggests a higher level of site intensity and activity.

Spatial Distributions

As a result of the recommendation and concurrence by DESHPO that the American Indian component of the Jones Site was not eligible for the NRHP, these related artifacts and materials were not systematically collected. Instead artifacts were only collected opportunistically from the surface of the mechanically stripped areas, in feature excavations, or in general collection of back-dirt piles following periods of rain.

Figure B-12 depicts the locations of all recovered prehistoric artifacts and features from the Jones Site. The locations are marked with the total number of artifacts found at the specific provenience. However, the type of recovery (shovel test, test unit, surface, feature) is not distinguished in the graphic. The artifacts are shown in relation to the two main excavation areas and the topographic contours for context.

Prehistoric artifacts were found with more frequency in Block B (see Figure B-14). This result was not surprising, given that more of the recovery effort occurred in this block. The single greatest find was 41 artifacts, which were recovered from Feature 157, a probable American Indian large basin. The next largest number, 35 artifacts, was found in association with Feature 159, which was considered a mixed deposit of both prehistoric and historical artifacts that had been disturbed by several levels of rodent tunnels. The remainder of the prehistoric artifacts was spread thinly over a wide spatial area and usually only comprised of 1-3 artifacts per location. As the majority of the artifacts were recovered in the plow zone, they were likely more concentrated at some point and have been dispersed over time. Consequently, not much of an association can be made between the diagnostic points and the other artifacts, or the relationship between the artifacts in the plow zone and the identified basin features in Block B.

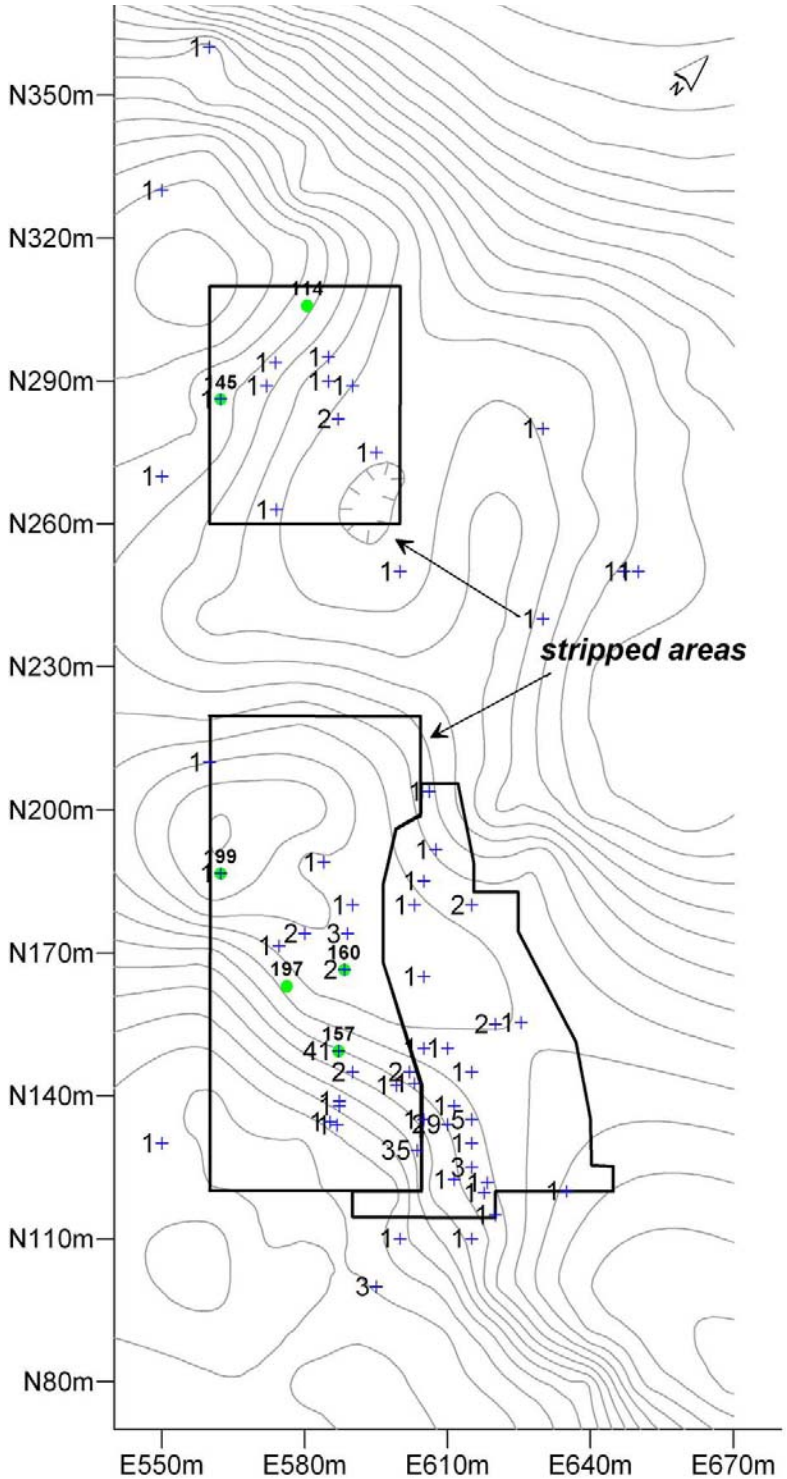

Figure 0-12. Prehistoric Feature and Artifact Distribution.

The prehistoric artifacts in Block A were mostly single finds and spread over a wide area. This distribution was likely related to their recovery primarily from the plow zone, which dispersed the artifacts over the area. The low numbers and wide spread distribution of the artifacts in

Block A was a partial hindrance to interpretation of the indeterminate basin features found in the block.

Other isolated artifact finds occurred outside of the main excavation areas during the initial survey and evaluative testing. However, these artifacts also were spatially removed from other finds and provided no useable data for the site. Consequently, the spatial information merely acts as a record to illustrate where the artifacts were found and offers little in terms of site interpretation.

Discussion

The high level of historical activity on the Jones Site has compromised the integrity of the American Indian component. Activities such as agricultural plowing, the clay procurement pit, structure construction, and the placement of the terra cotta drain pipe would all entail surface and subsurface ground modifications that would displace evidence of earlier occupations. Additionally, the more modern razing of these structures, the drainage ditch, and the spoil pile further impacted the site. This lack of integrity limited the research potential of the site component and was a primary reason for its being considered not eligible for the NRHP. However, despite these problems and the subsequent non-systematic collection of materials, there are some important items learned from the site component worth discussion. The discussion items are not necessarily specific to the Jones Site, but have more bearing on continuing archaeological studies in the region including: site selection, artifact data, feature formation, and integrity issues.

Site location is perhaps the most basic level of information that the American Indian component of the Jones Site offers. The information may not seem particularly relevant, but having information about the environmental and topographic setting for the site is valuable in further refining the regional site selection preference models. This information is particularly important given the recovery of three bifurcate points of the Archaic Period. Although, the site was by no means a single component Archaic Period site, the multiple points of the same type suggests that at least it was not just a random find. This period is generally under-represented in the archaeological record. Therefore, some gross level of information for the Archaic Period can be gleaned from the Jones Site. Interestingly, the site also contained a probable Late Woodland triangle point. Again, although the point cannot necessarily be associated with any of the other artifacts at the site, it shows a continued use of the site area throughout different portions of the past.

Artifact data, particularly for less understood diagnostic types, may often be valuable despite context or integrity issues. The recovery of the bifurcate points, as well as the large stemmed and triangle points, will add more data to the growing regional database of points. Although the context for the points was not clear, their physical attributes, including material type and measurement data, can be added to aid in refining statistical relations between traditional point typologies (Petraglia et al. 2005). Additionally, examples of other artifact types such as the uniface, retouched flake tools, and the axe were excellent examples of their type and might be used for comparative purposes with other sites. Even the thermally altered stone assemblage, although small, suggests further corroboration of material type preferences for thermal use, with quartzite being selected for and cryptocrystalline materials against.

The small range of artifact types hints at the type and range of activities that may have occurred at the site. Points generally suggest hunting related activities, with complete artifacts often implying re-sharpening or maintenance and fragmented finds suggesting discard after the final re-tooling of the artifact. The bifaces, uniface, and flake tools suggest expedient use and often, immediate discard for a variety of cutting and or scraping activities, for example working hide, meat, or vegetation. The recovery of a hammerstone could suggest pebble testing and/or tool maintenance. Either of these activities is plausible, and likely both occurred, as the cores and debitage recovered also suggested the same activities of pebble testing and mostly limited lithic reduction. The ground stone axe expands the range of activities of the site to include chopping, perhaps cutting wood for fires or other uses. Finally, the thermally altered stone artifacts are the result of fire-related activities, which could include but are not limited to, cooking and heating. Together, the artifact assemblages point to very limited, short term camps associated with hunting activities.

In terms of feature formation, the Jones Site provided several more examples of large basin features. The basin features that were identified shared a few common characteristics with each other and other sites in the area. Except for Feature 157, these basins were mostly devoid of artifacts, which although not uncommon for this type of feature was used as an indicator of their level of cultural interaction. Furthermore, the features displayed disparate levels of biotic and/or historical disturbance, but remained identifiable. This was important information to continue to refine and gain a better understanding of the actual formation processes of these nearly ubiquitous archaeological features. Recent research has begun to move away from overly simplified human versus nature interpretations and begun to examine the complexity of the interaction of both forces and their resultant manifestation (Petraglia et al. 2005; Parsons 2000). The mere identification of basin features on this site, which contained a paucity of artifacts, was intriguing and unexpected. Feature construction is generally considered to be emblematic of more intense site occupation or diversity of activity, which at the Jones Site seems contradictory to the low artifact numbers. The occurrence may be related to the more complex nature of basin feature origins and/or their function. Although the answer was not provided by the Jones Site, it added an additional line of research to test at other low artifact density sites in the future.

The Jones Site American Indian component provided a clear example of ways to maximize the level of data that is available at a particular site. Given the integrity problems identified for this component at the site, which severely limited its research potential, it nonetheless provided some useful data. Although the determination of being not eligible for the NRHP remains valid for the site, it did not mean that the additional information gathered for this component should be ignored, as it was still valuable. It also was important to observe that prehistoric features can and do often remain intact within the archaeological record, even at sites with intensive historical use.

In general, the American Indian component of the Jones Site likely represents a series of short term forays or camps. This interpretation is tentative and based primarily on the lower number of artifacts, especially certain types such as thermally altered stone. It remains tentative for the integrity and collection problems previously discussed. The recovery of different diagnostic points of the Archaic Period and the Late Woodland Period suggests continued site visits throughout the past. The recovery of the ground stone axe and hammerstone, in addition to the

more general chipped stone tools suggested that a variety of activities might have also occurred at the site, mostly related to tool maintenance or expedient processing. Additionally, the identification of a few large basin features hints at the possibility of an even greater range of activities at the site that could include habitation, storage, or ritual behaviors. However, the understanding of such features remains unclear for definitive site interpretation.

REFERENCES CITED

Abell, J.A., and P.L. O'Neill
1999 *Management Summary: Phase II Evaluation of the Jones Site (7NC-J-204) New Castle County, Delaware*. Prepared for the Delaware Department of Transportation, Dover, by Parsons Engineering Science, Inc., of Fairfax, Virginia.

Bowen, C. L. and Dennis Knepper
2003 *The Sandom Branch Site Complex (7NC-J-227, 7NC-J-228) and Late Prehistoric Occupation of the Delmarva Uplands.* Prepared for the Delaware Department of Transportation, Dover, Delaware by Parsons, Inc., Fairfax, Virginia. Draft.

Broyles, B.
1971 *Second Preliminary Report: The St. Albans Site, Kanawha County, West Virginia.* West Virginia Geological and Economic Survey, Report of Archaeological Investigations No. 3, Morgantown.

Carmichael, D.C.
1985 *Archeological Excavations at Two Prehistoric Campsites New Keystone Dam, El Paso, Texas*. Prepared for the U. S. Army Corps of Engineers, Albuquerque District, New Mexico. New Mexico State University, University Museum Occasional Papers Number 14. Las Cruces, New Mexico.

Cavallo, J.A.
1987 *Area B (28 Me 1-B) Archaeological Data Recovery, I-295 and Wetlands Interchange*. The Culutral Resources Group, Louis Berger & Associates, Inc., New Jersey. On File, Federal Highway Administration and New Jersey Department of Transportation, Bureau of Environmental Analysis.

Chapman, J.
1975 *The Rose Island Site and the Cultural and Ecological Position of the Bifurcate Point Tradition in Eastern North America*. Tennessee University Department of Anthropology, Knoxville.

Custer, Jay F.
1989 *Prehistoric Cultures of the Delmarva Peninsula: An Archaeological Study*. University of Delaware Press, Newark.

1994 *Stability, Storage, and Culture Change in Prehistoric Delaware: The Woodland I Period (3000 B.C.—A.D. 1000).* Delaware State Historic Preservation Office, Division of Historical and Cultural Affairs, Dover.

2001 *Classification Guide for Arrowheads and Spearpoints of Eastern Pennsylvania and the Central Middle Atlantic.* Commonwealth of Pennsylvania, Pennsylvania Historical and Museum Commission, Harrisburg.

Custer, J.F., A. Hoseth, B.H. Silber, D.J. Grettler, and G. Mellin
1994 Final Archaeological Investigations at the Pollack Prehistoric Site (7K-C-203), State Route 1 Corridor, Kent County, Delaware. DelDOT Archaeology Series, No. 126. Delaware Department of Transportation, Dover, Delaware.

Custer, J.F., and B.H. Silber
1995 *Final Archaeological Investigations at the Snapp Site (7NC-G-101), State Route 1 Corridor, Chesapeake and Delaware Canal Section, New Castle County, Delaware*. DelDOT Archaeology Series No. 122. Delaware Department of Transportation, Dover, Delaware.

Dibble, H.L.
1995 Middle Paleolithic Scraper Reduction: Background, Clarifiaction, and Review of the Evidence to Date. *Journal of Archaeological Method and Theory* 2(4): 299-368.

Egloff, Keith T. and Joseph M. McAvoy
1990 Chronology of Virginia's Early and Middle Archaic Periods. In *Early and Middle Archaic Research in Virginia: A Synthesis*, edited by T.R. Reinhart and M.E.N. Hodges, pp. 61-79. Archaeological Society of Virginia Special Publication No. 22.

Flenniken J.J., and P.J. Wilke
1989 Typology, Technology, and Chronology of Great Basin Dart Points. *American Anthropologist* 91:149-158.

Frison, G.
1968 A Functional Analysis of Certain Chipped Stone Tools. *American Antiquity* 33: 149-155.

Gardner, W.
1974 The Flint Run Paleo-Indian Complex: Pattern and Process During the Paleo-Indian to Early Archaic. In *The Flint Run Paleo-Indian Complex: A Preliminary Report. 1971-1973 Seasons*, edited by W.M. Gardner, pp. 5-47. Occasional Publication No. 1, Catholic University Archaeology Laboratory, Washington, DC.

Holland, C.G.
1970 *An Archaeological Survey of Southwest Virginia*. Smithsonian Contributions to Anthropology No. 12.

Hranicky, W.
1994 *Middle Atlantic Projectile Point Typology and Nomenclature*. Archaeological Society of Virginia, Special Publication No. 33, Courtland.

Justice, N.
1987 *Stone Age Spear and Arrow Points of the Midcontinental and Eastern United States*. Indiana University Press, Bloomington.

Kinsey, W. F., III
1972 *Archaeology in the Upper Delaware Valley*. Anthropological Series, No. 2. Historical and Museum Commission, Harrisburg, Pennsylvania.

Kneberg, M. and Lewis, T.
1955 The A.L. LeCroy Collection. *Tennessee Archaeologist* 11(2):75-82.

McAvoy, Joseph M. and Lynn D. McAvoy
1997 *Archaeological Investigations of Site 44SX202, Cactus Hill, Sussex County, Virginia*. Virginia Department of Historic Resources, Research Report Series No. 8. Prepared for the Virginia Department of Historic Resources, Richmond, Virginia by Nottoway River Survey Archaeological Research, Sandston, Virginia, Report No. 2.

Mueller, R.G., and J.C. Cavallo
1995 Multiple Working Hypotheses: An Analysis, Pithouses or Tree Throws. Paper presented at the Eastern States Archaeological Federation Meetings, Wilmington, Delaware.

Parsons
2000 *Phase III Closeout Summary, The Jones Site (7NC-J-204), SR 1 Smyrna to Pine Tree Corners, New Castle County, Delaware*. Closeout Summary prepared for Delaware Department of Transportation of Dover, Delaware, by Parsons of Fairfax, Virginia, April 14, 2000.

Petraglia, M.D., S.L. Bupp, S.P. Fitzell, and K.W. Cunningham
2005 *Hickory Bluff: Changing Perceptions of Delmarva Archaeology (Draft)*. DelDOT Archaeology Series No.175. Delaware Department of Transportation, Dover, Delaware.

Ritchie, W.A.
1971 A Typology and Nomenclature for New York Projectile Points. *New York State Museum and Science Bulletin No.* 384.

Stewart, M.
1998 *Archaic Triangles at the Abbott Farm National Landmark: Typological Implications for Prehistoric Studies, Middle Atlantic Region*. Paper presented at the 1998 Middle Atlantic Archaeological Conference, Cape May, New Jersey

Towner, R.H. and M. Warburton
1990 Projectile Point Rejuvenation: A Technological Analysis. *Journal of Field Archaeology* 17: 311-321.

Wall, R.D., R.M. Stewart, J. Cavallo, D. McLearen, R. Foss, P. Perazio, and J. Dumont
1996 *Prehistoric Archaeological Synthesis. Trenton Complex Archaeology: Report 15.* The Cultural Resources Group, Louis Berger & Associates, East Orange, New Jersey.