FIGURE 68

Distribution of Elements, Ovis/Capra

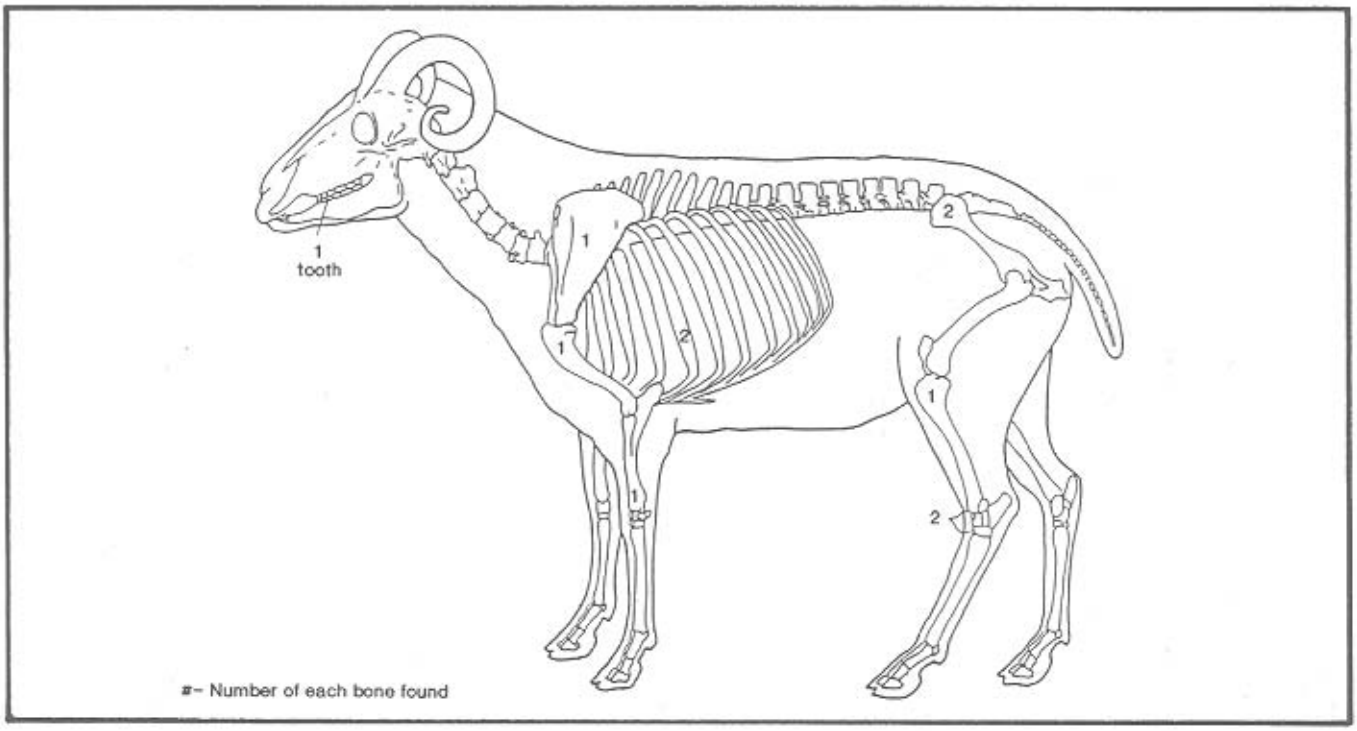

Soil Chemical Analysis of Subsoil Samples

Three hundred eighty-two samples of the subsoil generally taken at 10' grid co-ordinate intervals were tested for pH, phosphate, potassium, magnesium and calcium levels (Figure 25) (see Field Testing and Laboratory Analysis: Methodology). Computer generated distribution maps (using **Golden Software**) have been prepared for each of the five chemicals tested, and the principal site features plotted in for reference and to aid in interpretation. The following analysis seeks to identify and interpret correlations between areas of elevated chemical levels and historic land use and activity patterns indicated by the distribution and nature of the site's features.

Ph

The naturally acidic Delaware soils should yield pH readings below 6.0, with higher levels indicating agricultural liming. At the Darrach site, pH levels peaked at over 7.0 in samples taken beneath the store's cellar floor (Figure 70). From this apex, they decreased across the site, most dramatically to the southwest. The pattern here reflects not agricultural liming, but the high-lime content mortars used in the store's construction and the oyster shells tenants deposited across the site. Thus, for example, a secondary peak occurs near the shell middens (Features 108-108C). The subsoils underlying the pond yielded the lowest, most acidic readings.

Phosphate

Elevated phosphate levels generally appear in soils which received concentrations of human or animal waste or other organic matter, such as animal pens or barnyards, open "privy" areas, and manured gardens. At the

FIGURE 69

Cuts of Meat, Lamb/Mutton

BONE STRUCTURE AND COMMERCIAL CUTS FROM A CARCASS OF LAMB

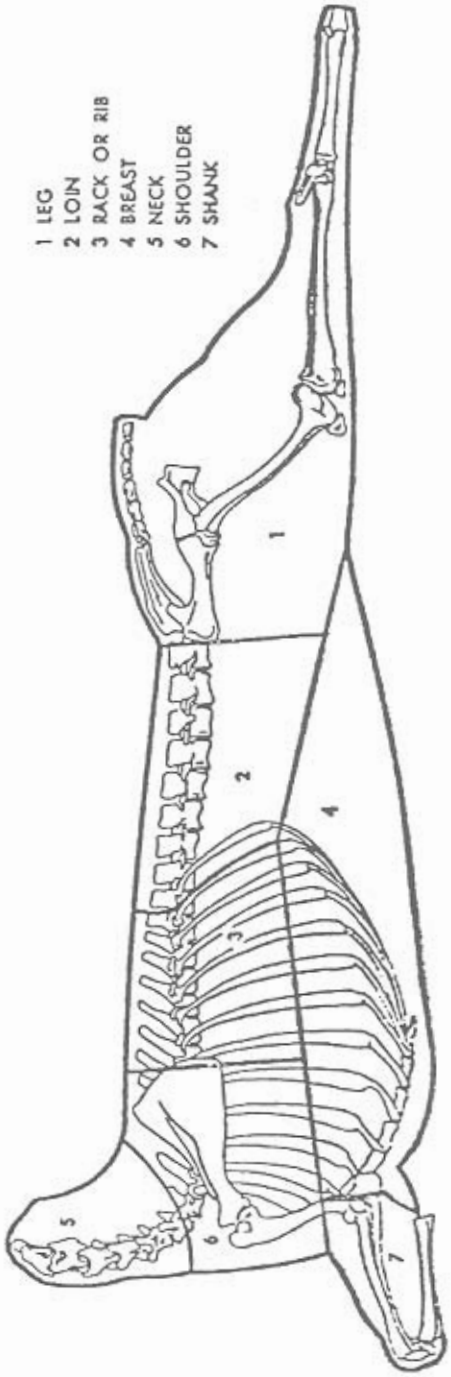

RECIPES KEYED TO CHART

Lamb or Mutton Roast, Page 405: Rib 3.

Broiled Lamb Chops, Page 406: Rib 3; Loin 2; Leg 1.

Broiled Lamb Kebabs, Page 406: Shoulder 6.

Lamburgers, Page 428: Shoulder 6.

Since lamb is a relatively tender meat, almost any cut, especially of young lamb, can be cooked by the dry heat methods above. Also see pages 405-406. Cuts from active areas where the muscle is firmer may be cooked according to the following moist heat methods on pages 421-423.

Braised Stuffed Shoulder or Farce of Lamb, Page 421: Shoulder 6.

Braised Lamb Shanks or Trotters, Page 422: Shank 7.

Irish Stew, Page 423: Shoulder 6; Breast 4.

Navarin Printanier, Page 422: Shoulder 6; Breast 4.

Try cooked lamb in Curry of Lamb, Page 423; Lamb and Eggplant Casserole, Page 430; Stuffed Eggplant, Page 278.

For Variety Meat Recipes, see Tongue in Creole Sauce, Page 446; Steak and Kidney Pie, Page 418.

FIGURE 70

pH Levels, Subsoil

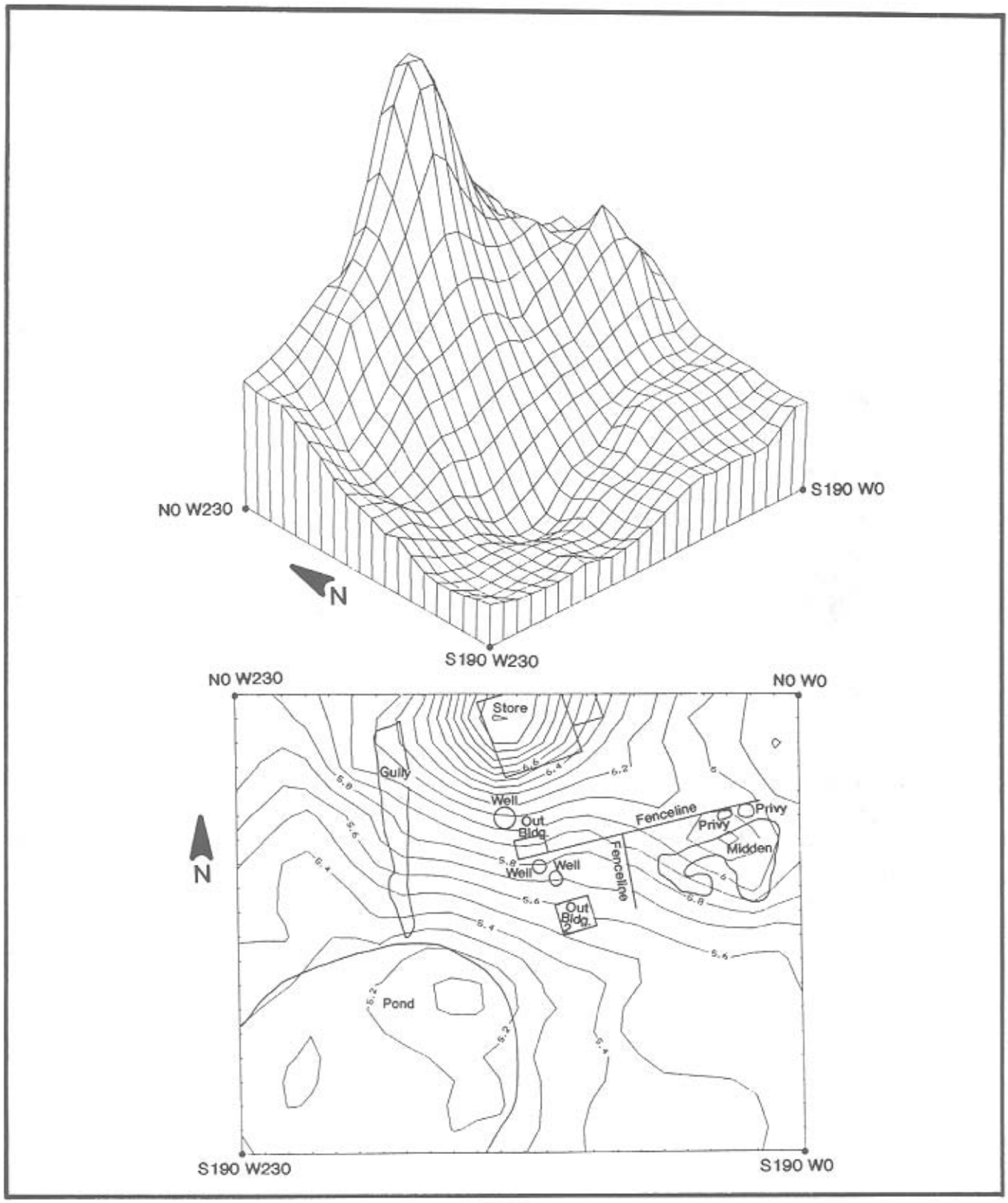

Darrach site, the yard west of the store yielded the highest phosphate readings (Figure 71). The single highest peak occurs over the cluster of features off the store's southwest corner; from there, the concentration extends to the north across the western yard to just beyond the gully. The multitude of post and possibly planting features and the artifact concentrations associated with the features had already indicated an area of intensive activity from the store's initial occupation through the early nineteenth century. Perhaps the tenants located an enclosed, manured garden here or penned their animals in the area, with the feature cluster extending from the store's southwest corner to near the gully's edge representing fencelines and the gully itself serving as a sort of ha-ha ditch. Alternatively, this area may simply have served as a disposal area for household refuse, including organic wastes from food processing and preparation. The quantity of artifacts in the features would support this interpretation as well, although food bone and shell were disposed of in greater quantities elsewhere on the site.

A secondary peak appears in the east yard, also the locus of numerous historic features. The high point of the elevated readings in this area coincides with the location of Feature 139, a shallow, truncated trash pit. The quantity of food bone recovered from this trash pit indicated its use for kitchen waste disposal. Nevertheless, the excessive phosphate levels in this particular spot are curious; the reading for S40 W60 was 87 compared to 48 from the Feature 139 sample. Furthermore, subsoil samples beneath the nearby privies and midden did not produce similarly elevated readings. In those loci, the phosphate levels were higher than those beyond the core site area, yet they remained significantly lower than the Feature 139 peak. They do not seem high enough to indicate an animal pen in the vicinity of the middens, at least not one of long term duration.

Finally, the dark, organic-rich soils deposited through slopewash into the pond also elevated the phosphate levels there. The outline of the pond's banks corresponds to the perimeter of the phosphate plateau in the southwestern quadrant of the site.

Potassium

Elevated potassium levels at an historic site indicate areas of surface burning or the dumping of fireplace or stove wood ash. None of the features excavated at the Darrach Store site contained ash deposits, but charcoal concentrations occurred in the midden (Feature 108), the fire pits, and in many of the post holes.

Potassium produced the most erratic results of the chemicals tested (Figure 72). Nevertheless, a few patterns appear to correlate with historic land use. Potassium concentrations occurred in the west yard, along with the phosphate concentrations. The concentrations peak over the clusters of features off the store's southwest and northwest corner. They are not interrupted by the fenceline which ran north-south just west of the store. The potassium concentrations also extend halfway across the featureless rear yard before dropping off sharply. In addition, elevated levels appeared in samples from beneath the store's cellar, although there is no other archaeological evidence that the store burned.

Another plateau of elevated readings occurs in the extreme northeast corner of the site, beyond the grave and concentration of features east of the store's addition, and north of the privies and midden. Curiously, the potassium levels drop sharply just at the fenceline, despite the concentrations of charcoal in the fire pit (Feature 75) and in the middens (Features 108-108C).

The store's residents, then, apparently dumped their fireplace sweepings principally in two places. The first was along with other household refuse in the yard just west and south of the store. Significantly, the archaeological evidence points to the store's west wall as the probable chimney location. The second dump lay east of the store, near the road, at the yard's edge.

Magnesium

Magnesium concentrations generally correlate with those of calcium, and indicate the deposition of lime. Agricultural liming, lime mortars and oyster shells most commonly account for elevated magnesium and calcium

FIGURE 71

Phosphate Levels, Subsoil

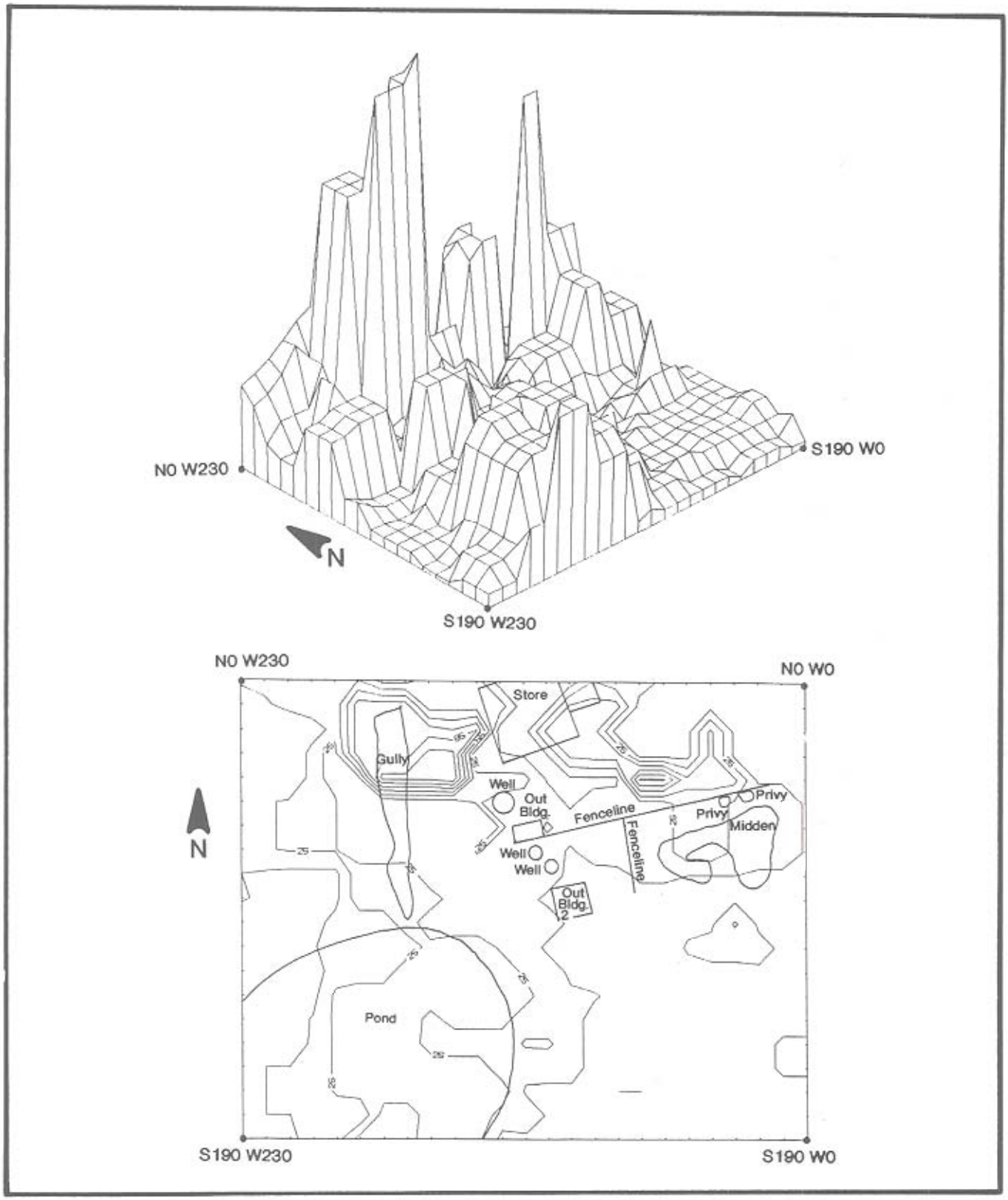

FIGURE 72

Potassium Levels, Subsoil

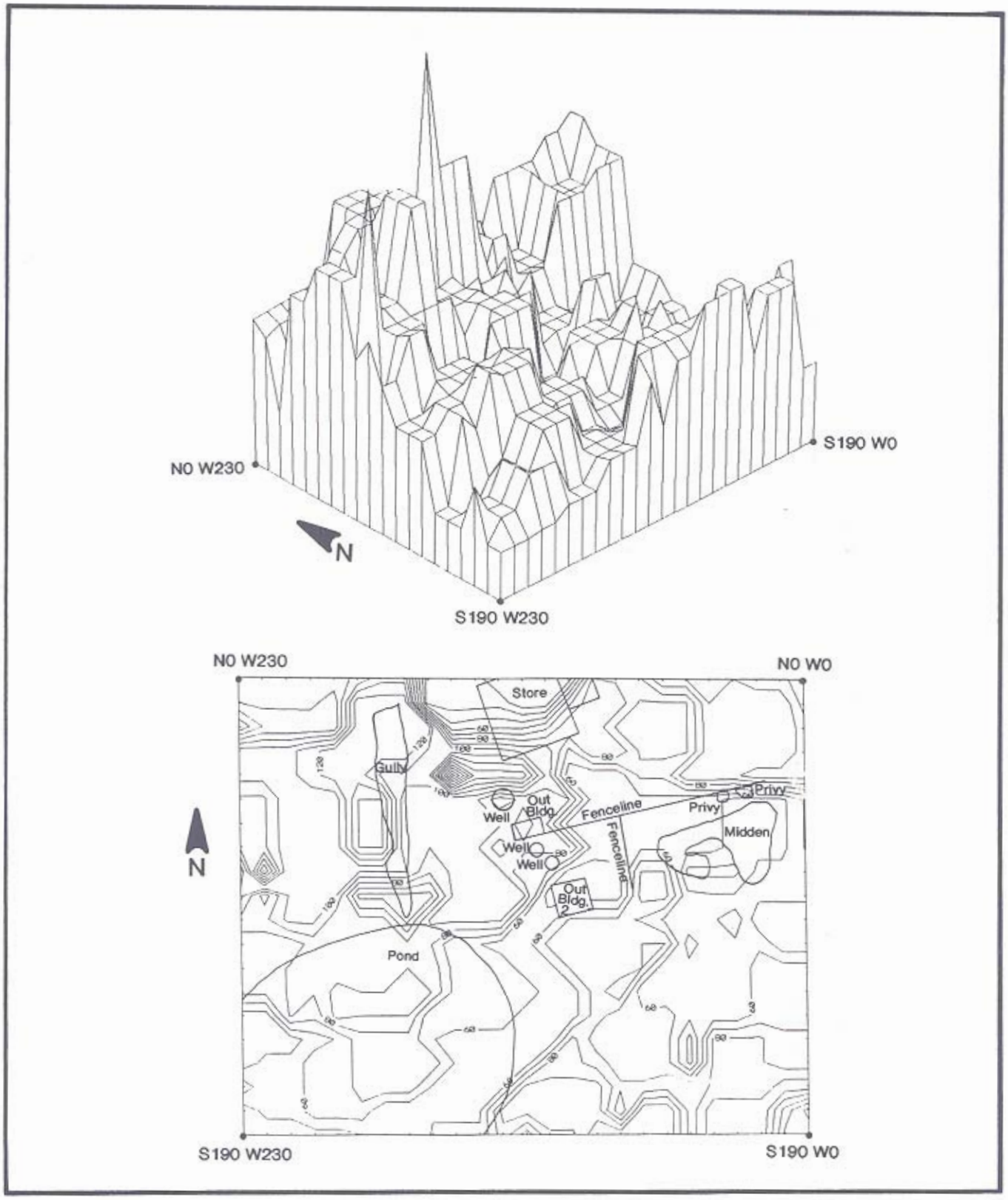

levels on historic sites. Magnesium concentrations in particular will result from the application of lime from dolomitic limestone.

As expected, the single highest magnesium peak at the Darrach site occurs at the store (Figure 73), where brick rubble with lime mortar was dumped into the store's cellar during its demolition in the 1860s. The excavations also demonstrated the presence of mortar cellar floors. A second, less intense peak correlates with a phosphate concentration at Feature 139, the truncated trash pit. The excessive magnesium levels at this spot are also anomalous; a reading of 451 was obtained from the S40 W60 sample, compared to 161 from Feature 139. Neither is the concentration matched beneath the privies or middens. Finally, the samples revealed the lowest magnesium levels beneath the pond and gully.

Calcium

Excessive calcium levels do correlate with the magnesium concentration at the site of the store (Figure 74), a function of the high lime content in the mortar used to lay up the masonry walls and as a flooring material. A secondary peak also correlates with those exhibited by magnesium and phosphate in the soil beneath Feature 139, the trash pit. Here again, the subsoil readings exceeded those of the feature by a considerable amount (S40 W60 - 2200; Feature 139 - 930). The reading seems especially anomalous given that the samples beneath the shell middens produced only slightly elevated readings. Finally, the lowest calcium levels correlate with the low pH readings beneath the pond.

Analysis and Distribution of Artifacts from Plow Zone Excavations

The 115 5' x 5' units of plow zone excavated in the core area of the Darrach Store site (Grid W40 - W180 and Grid S0 - S90; see Figures 25 and 26) yielded 17,775 artifacts (not including brick, which was mostly weighed and discarded in the field). This represents more than two and one-half times the number of artifacts from the excavated features. Although plowing destroyed the stratigraphy of the yard deposits, and even though post-depositional breakage caused by the plowing accounts at least in part for the high artifact count, nevertheless analyses of the assemblage can contribute significant information.

The first analysis consists of comparing the artifact types comprising the two assemblages, that from the plow zone excavations and that from the features. Differences indicate differences between sheet midden/refuse yard deposits and shallow features, and deep features (those of which a portion was preserved below the plow zone). For example, the data may indicate differences or similarities in refuse disposal patterns between surface sheet middens and trash pits or other discrete subsurface features.

The second analysis considers the horizontal distribution of the plow zone artifacts. Other researchers have demonstrated that plowed contexts preserve the horizontal integrity of artifacts, at least at the level of deposition within activity areas (Knoerl and Versaggi 1984; McManamon 1984). Computer generated maps (using **Golden Software**) plot the distributions of all artifacts, window glass, wrought nails, cut nails, wire nails, bottle glass, glass tableware, ceramics, tobacco pipes, faunal remains, and shell. They reveal culturally meaningful distribution patterns of artifact classes defined by function and temporal association, thus illuminating aspects of land use and waste disposal by the tenants, proprietors and perhaps customers of the Darrach Store.

Comparison of Plow Zone and Feature Artifacts

Ceramics dominate the plow zone assemblage, of which 9950 sherds account for 56% (Table 84). The comparatively small sample of the site plow zone excavated produced more than three and one-half times the number of ceramic sherds found in all the features. Breakage by the plow, however, accounts for much of the difference, as most of the plow zone ceramics are extremely small. The plow zone ceramic collection thus cannot be analyzed by formal-functional types. Redware fragments, most numerous, comprise 37% of the collection

FIGURE 73

Magnesium Levels, Subsoil

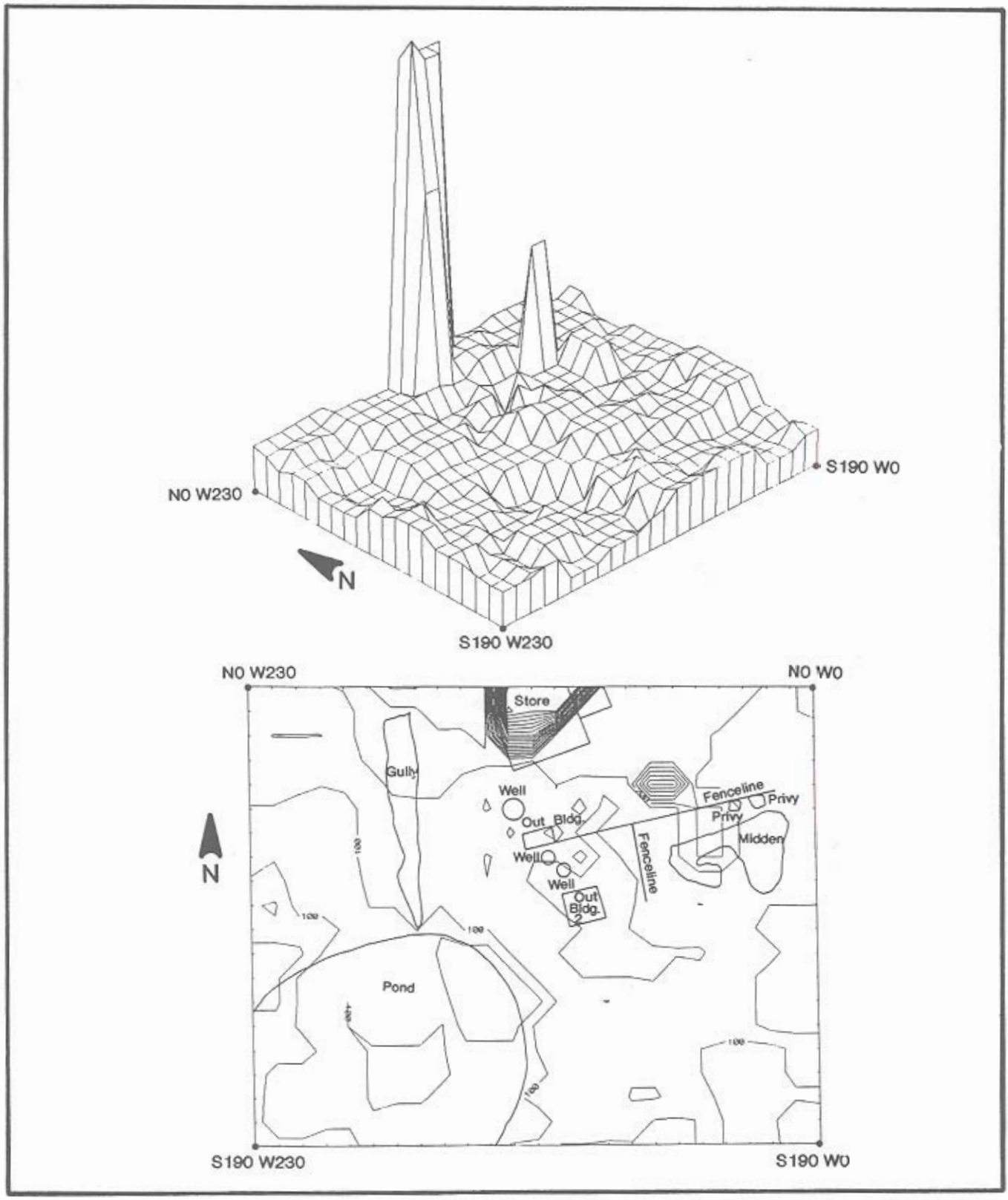

FIGURE 74

Calcium Levels, Subsoil

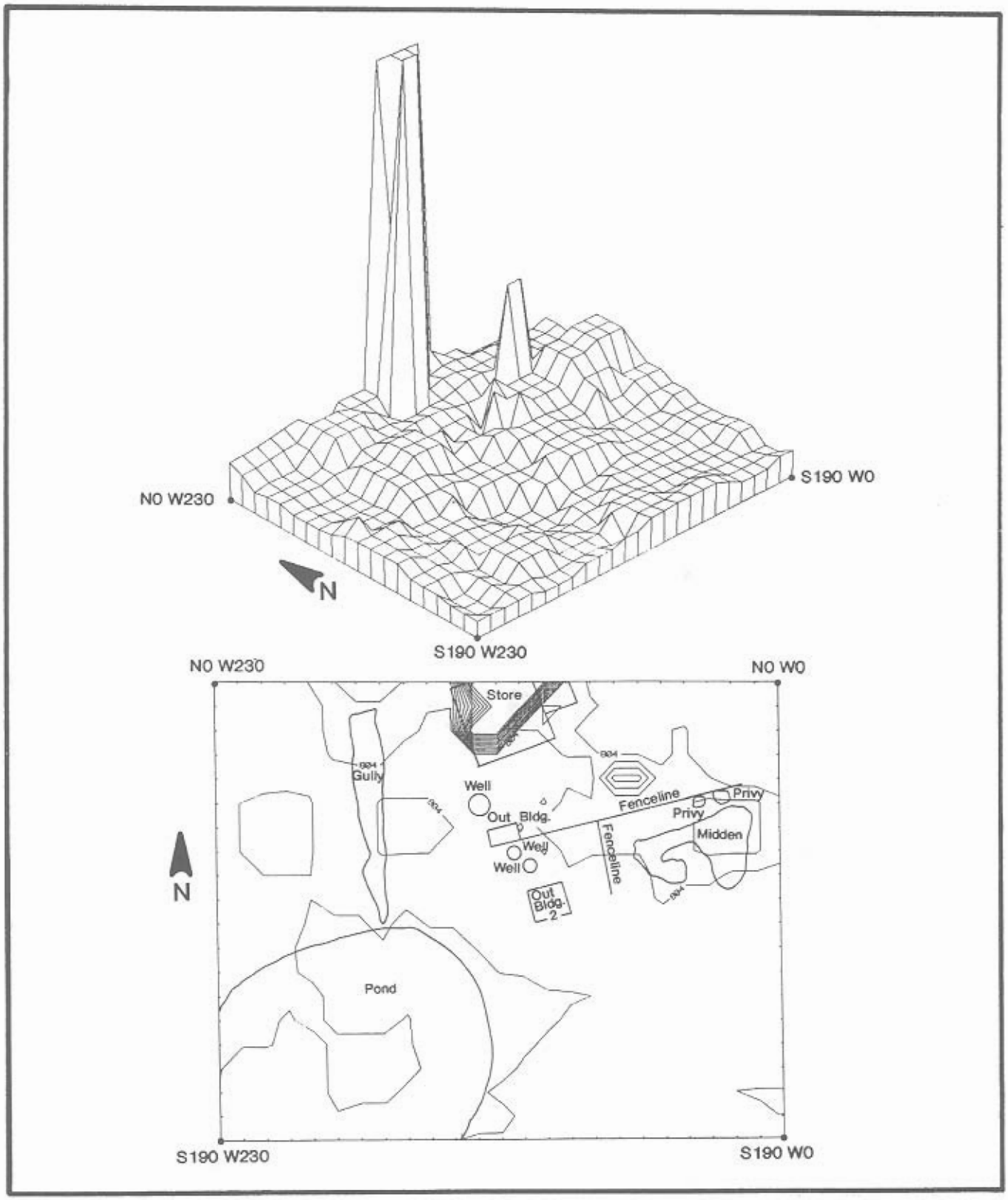

TABLE 84

ARTIFACTS RECOVERED FROM PLOWZONE EXCAVATIONS

Type	Number	Total	% of Tot. Ass.
CERAMICS			
Redware	3633	3633	
Staffordshire	149	149	
Tin Glazed	53	53	
Creamware			
Undecorated	574		
Transfer Printed	13		
Whieldon	1	588	
Pearlware			
Undecorated	1005		
Edged	166		
Embossed	2		
Annular	77		
Stenciled	5		
Painted	138		
Transfer Printed	157	1550	
Whiteware			
Undecorated	2317		
Annular	116		
Shell Edged	105		
Painted	228		
Sponged	246		
Transfer Printed	256		
Flown Printed	5		
Luster	2	3275	
Ironstone	134	134	
Yellowware	9	9	
Rockingham	99	99	
Stoneware			
White Salt Glazed	42		
Black Basalt	4		
Scratch Blue	26	72	
Bottles	1		
Nottingham	1		
British Brown	9		
American	34	45	

TABLE 84 (cont.)

Type	Number	Total	% of Tot. Ass.
Porcelain			
English	4		
Parian	2		
Bone China	164		
American	173	343	
Total Ceramics		9950	56%
GLASS			
Bottle			
Blown	263		
Molded	1404		
Jar			
Molded	21		
Tableware	17		
Household			
Lamp	151		
Other	15		
Unidentified	328		
Total Glass		2199	12%
ARCHITECTURAL			
Window Glass	2755		
Nails			
Wrought	69		
Cut	661		
Wire	14		
Spikes	18		
Unidentifiable	692		
Other	16		
OTHER METAL	36	413	
Total Architectural		4261	24%
SHELL		478	
BONE		295	
MISCELLANEOUS			
Plastic	4		
Buttons	11		
Textiles and Leather	3		
Wood	4		
Toys	3		
Other	3		

TABLE 84 (cont.)

Type	Number	Total	% of Tot. Ass.
Total Miscellaneous		28	
TOBACCO PIPES		151	
Grand Total		17775 and brick	

Key:
% of Tot. Ass. = Percentage of Total Assemblage

(Table 84). Nineteenth century whitewares and ironstones, post circa 1820, form another one-third; only 22% are eighteenth and early nineteenth century creamwares and pearlwares (6% and 16% respectively).

Architectural materials, excluding brick, comprise one-quarter of the collection. Almost two-thirds are window glass, the remainder mostly nails. Cut nails outnumber wrought nails by almost teb to one. Bottle, jar, tableware, and household glass account for a comparatively small 12% of the plow zone artifacts, three-quarters of it molded bottle glass. Shell (3%) and faunal remains (2%) were not prevalent in the plow zone sample. The remaining 3% of the plow zone assemblage consists of tobacco pipe fragments, buttons, tools, eating utensils, buckles, hardware, horseshoes, and other small objects.

In comparison, excavation of more than 230 features in the one acre site area yielded 6,886 artifacts. In two categories, bone and shell, the number of fragments recovered from the features exceeds that from the plow zone sample. The features produced 1355 shells not including an unknown number from the shell middens (Features 108-108C) discarded in the field. Only 478 appeared in the sampled plow zone, and all were collected. Nine hundred fourteen animal bone fragments form the collection from the features, compared to only 295 from the plow zone; collection was 100% from both contexts. A portion of this difference resulted from the limited areal extent of the plow zone sampling. More than three-quarters of the middens (Features 108-108C) and both privies (Features 132 and 148), the primary sources of the shell and food bone, lay east of the plow zone sample area.

The ceramic types represented in the plow zone and features also differ (Table 85). Redware predominates in both; the significant difference lies in the percentages of the eighteenth and nineteenth century refined white earthenwares. In the plow zone sample, the percentage of refined white earthenwares progressively increases from the earliest to latest types. In comparison, the earliest of the refined white earthenwares, creamware, is most prevalent in the features. Although probably also in part a function of the plow zone sampling design, nevertheless differential disposal patterns appear over time. The later store residents did not dispose of most of their household trash in discrete deep features such as trash pits, privies, or in large concentrated middens as did the eighteenth and early nineteenth century tenants. Instead they used shallow features or sheet deposits in the yard later disturbed by plowing.

The final points relate not so much to differences between the plow zone and feature assemblages as to common patterns they exhibited. Glass bottles, tableware and other glass items occur in small numbers throughout the store's occupation. At the very least, glass must have been expensive and highly curated. Other materials, ceramics one of them, were utilized as alternatives, certainly in the foodways system. The archaeological evidence and that from the early nineteenth century Duck Creek store accounts are congruent on this point.

TABLE 85

PRINCIPAL CERAMIC TYPES,
PLOWZONE AND FEATURE ASSEMBLAGES

Type	Features	Plowzone
Redware	55%	37%
Creamware	13%	6%
Pearlware	10%	16%
Whiteware	12%	34%

More problematic are the nails. Cut nails outnumber wrought nails by 982 to 94 in the feature and plow zone assemblages, with cut nails dominant in both. Cut nails, however, date no earlier than the 1790s. The archaeological architectural evidence, then, indicates a 1790s-early nineteenth century structure. The documents, and other archaeological evidence such as the ceramics, however, point to an earlier eighteenth century occupation date, perhaps prior to 1775. One likely explanation exists for the apparent discrepancy. Either just after John Darrach completed his new house and store in Duck Creek Crossroads between 1797 and 1804 or just after his death in 1805, he or his heirs had the old store near the Landing converted for residential purposes. The addition to the store's eastern side dates to this period, the outbuildings, the large middens (Features 108-108C), and privies (Features 132 and 148) were in use at this time. In addition to enlarging the structure, the owners may have undertaken major renovations. Even so, the small number of wrought nails suggests the debris from these renovations was removed from the site for disposal, burning or recycling.

Distributional Analysis of Plow Zone Artifacts

The distributions of artifact types recovered from the plow zone excavations are plotted on a series of 17 maps, accompanied by three-dimensional graphic representations (Figures 75-90). The principal features - the store, the wells, the outbuildings, the corner of the midden, the main fenceline and the gully - have been overlaid on the maps to aid in interpretation. Most of the midden, most of Outbuilding II, and both privies lay beyond the boundaries of the plow zone sample area.

The distribution map for the total plow zone assemblage of 17,775 artifacts reveals two primary concentrations (Figure 75). The first occurs in the vicinity of the middens, and the second just west of the northern end of the gully at the edge of the site. Secondary concentrations appear in the store's west and east yards and around the wells and outbuildings. These artifacts originated either in the upper portions of features preserved below the plow zone or in sheet middens or shallow features plowing destroyed. The following review will identify correlations between the distributions and the principal artifact-bearing features, and will seek evidence of disturbed sheet refuse deposits associated with the structures or other activity areas.

Four architectural materials - window glass, wrought nails, cut nails, and wire nails - are considered first. The two largest window glass concentrations (of a total of 2755 sherds) occur just beyond the store's west wall and in the vicinity of Outbuilding I and Wells 82 and 99 (Figure 76). The former concentration also correlates with soil chemical levels indicating intensive use of this west yard. The latter may have resulted both from the outbuilding and from the secondary use of the wells as trash receptacles. Rubble from the store's demolition in particular filled Well 99. Secondary window glass concentrations occurred at the midden (Features 108-108C), along the store's rear wall and in association with the artifact concentration west of the gully's northern end.

FIGURE 75

Distribution of Artifacts, Plow Zone Excavation

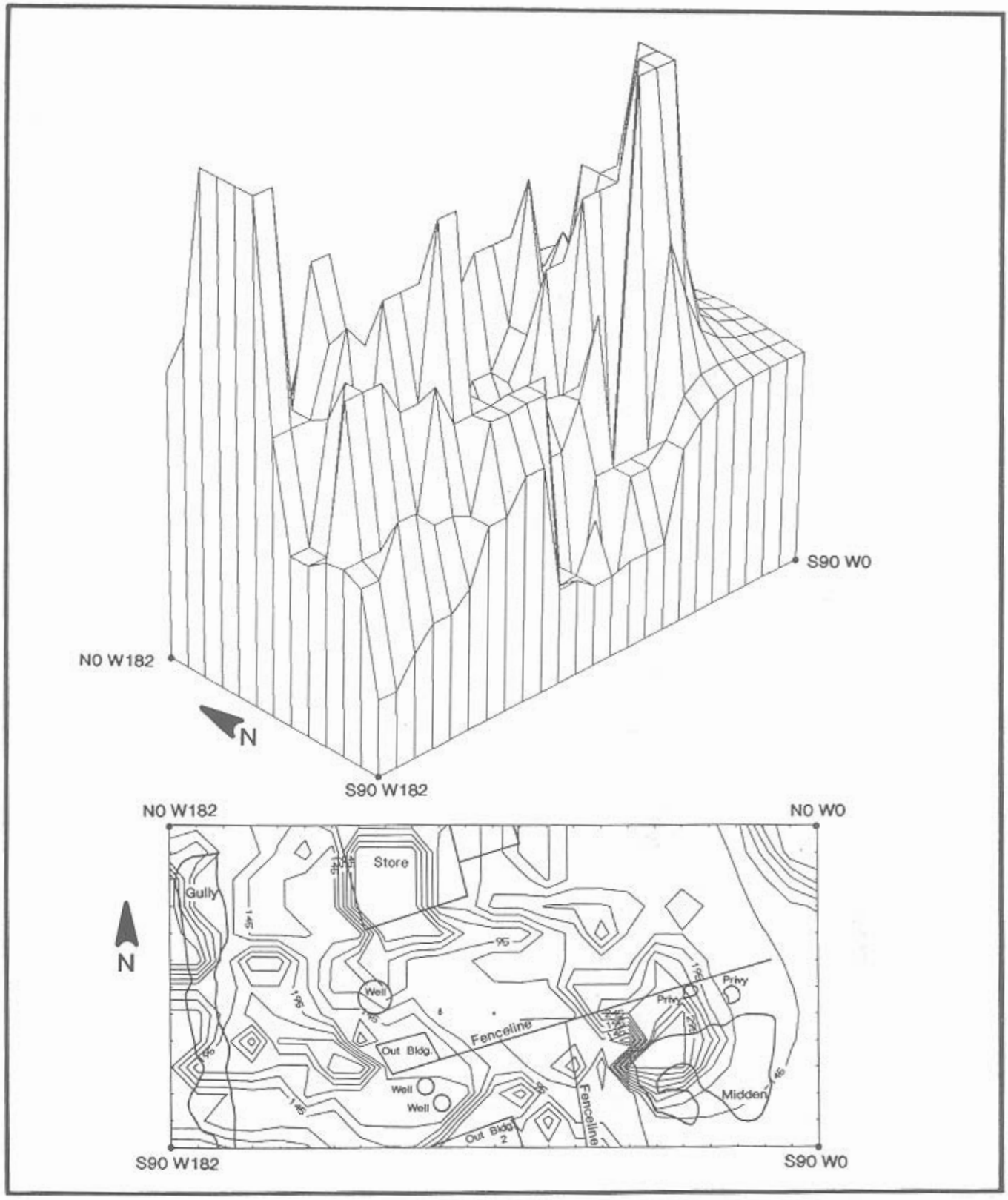

FIGURE 76

Distribution of Window Glass, Plow Zone Excavation

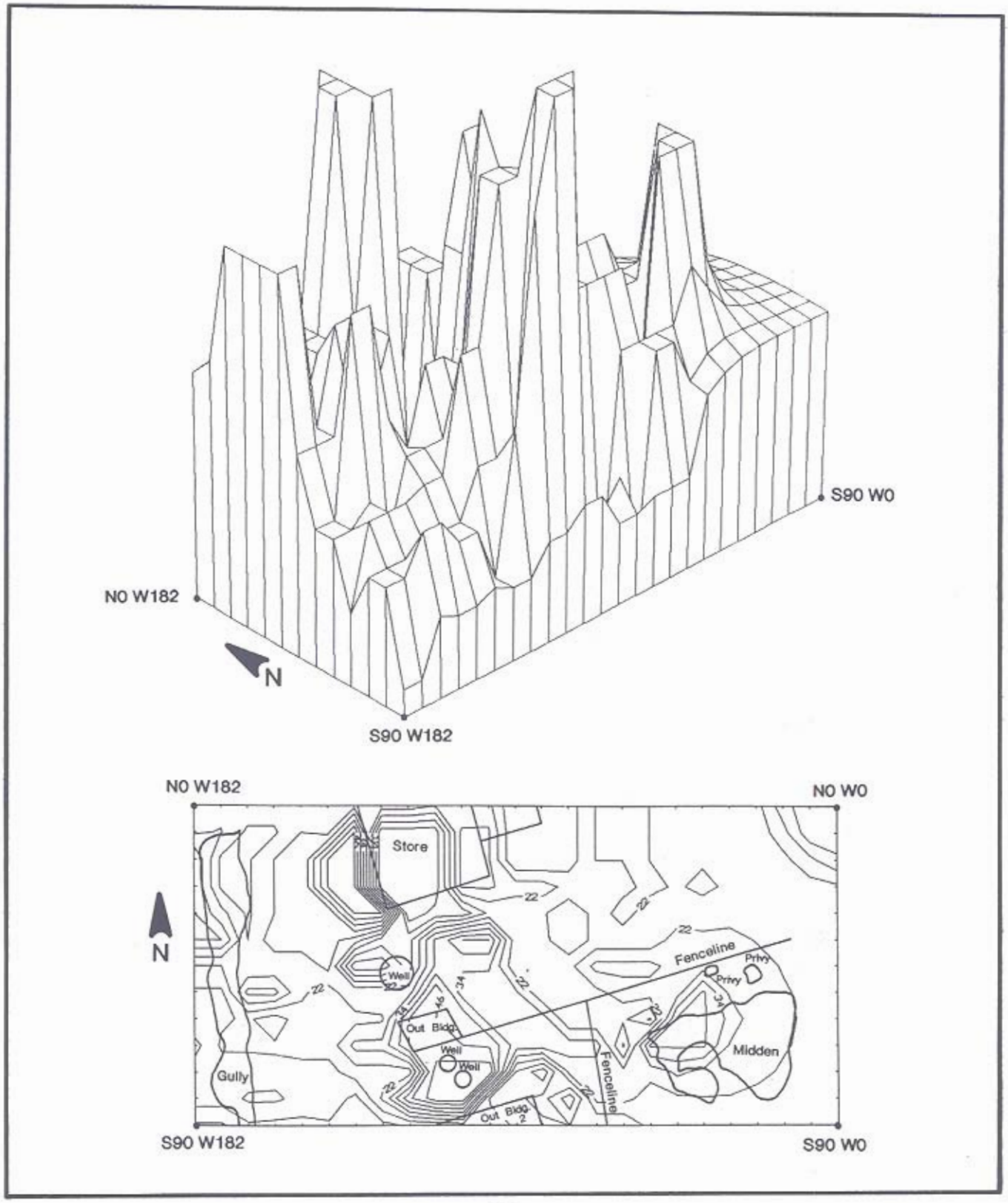

The 69 wrought nails (Figure 77) clustered in three locations, the densest concentration occurring in conjunction with the early trash disposal area just west of the store. The second larger but less concentrated occurrence extended along the gully and across its middle section. A scattering of wrought nails also bordered the open courtyard behind the store, between it and the middens. Significantly, the vicinity of the outbuildings yielded no wrought nails.

Cut nails (a total of 661) occur more evenly across the site (Figure 78), supporting the conclusion that the store underwent major renovations and the outbuildings were constructed sometime between 1790 and the early years of the nineteenth century. The northern end of the gully, the plow zone overlying the middens (Features 108-108C), and an area west of the wells between the two outbuildings, exhibited the greatest concentrations. Another concentration occurred east of the store, near the post-1803 addition. Cut nails were not as numerous in the yard immediately west of the store, where wrought nails and other early artifacts clustered. The 14 late nineteenth or twentieth century wire nails found just behind the store (Figure 79) represent an intrusion postdating the Darrach Store.

The 1,667 bottle glass fragments exhibit a distributional pattern unique to the artifact types examined (Figure 80). A dense and widespread concentration appears in the store's eastern yard, its peak about 40' east of its southeastern corner. This concentration does not correspond with the locations of any of the principal artifact-bearing features such as the middens, privies or wells. Neither does it correlate with the concentrations of any other domestic artifact types, all of which occurred most frequently near these features or in the yard and gully west of the store. Thus at least some of the store's tenants, proprietors, or clerks differentially discarded of different materials across the property. Bottles (whole or broken at the time of disposal) were dumped away from those areas which received other household refuse such as food waste and ceramics. A nearly complete bottle was found during the backhoe striping of the plow zone (Plate 15). Perhaps this bottle dump points to an area of the site which received little traffic, or which the storekeepers and customers used to dispose of the containers of beverages consumed in the course of social and business interaction at the store. The concentration may also represent a dump of late nineteenth or twentieth century origin, however, the glass bottle sherds themselves do not support this latter interpretation. A second, lesser concentration of bottle glass also occurred in the plow zone over the northern end of the gully, the location of other artifact concentrations, including window glass, wrought and cut nails, certain ceramic types, and clay tobacco pipes.

The 17 glass tableware sherds recovered during the plow zone testing did not occur in association with either of the bottle glass concentrations (Figure 81). Most originated above the cluster of features off the store's southwest corner, just west of the window glass and nail concentrations. The remaining sherds came from near the southern end of the gully and the open courtyard directly behind the store.

The almost 10,000 ceramic sherds forming 57% of the plow zone assemblage were distributed across the test area, like the cut nails. Two peaks rise above the others, pointing to dense concentrations in the plow zone over the middens (Features 108-108C) and the gully's northern end west of the store. In order to discern changing distributional patterns over time, and thus changes in disposal practices and land use, a series of 6 maps were prepared for ceramic types in production during different periods of the store's occupation. The first plots the distribution only of those ceramic types in production before and up to circa 1775 (Figure 82). Sixteen such types (excluding redwares) are represented in the assemblage by 861 sherds:

English underglazed porcelain (South Number (SN) 31)
Nottingham stoneware (SN 46)
British brown stoneware (SN 54)
Molded white salt-glazed stoneware (SN 16)
Debased scratch-blue white salt-glazed stoneware (SN 24)
Scratch-blue white salt-glazed stoneware (SN 34)
White salt-glazed stoneware mugs (SN 40.1)
Wares decorated with Littler's blue (SN 41)
Slip-dipped white salt-glazed stoneware (SN 48)

FIGURE 77

Distribution of Wrought Nails, Plow Zone Excavation

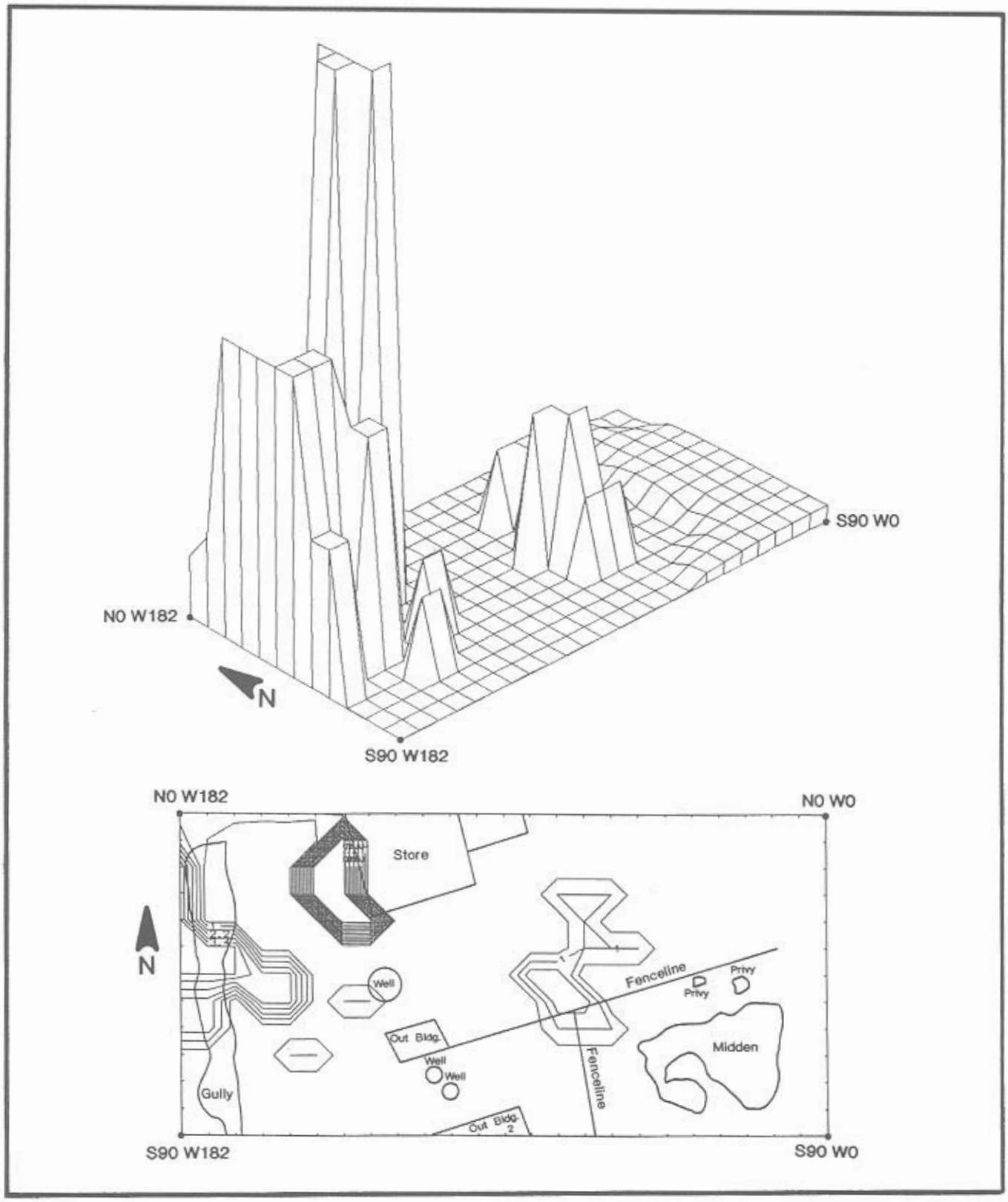

FIGURE 78

Distribution of Cut Nails, Plow Zone Excavation

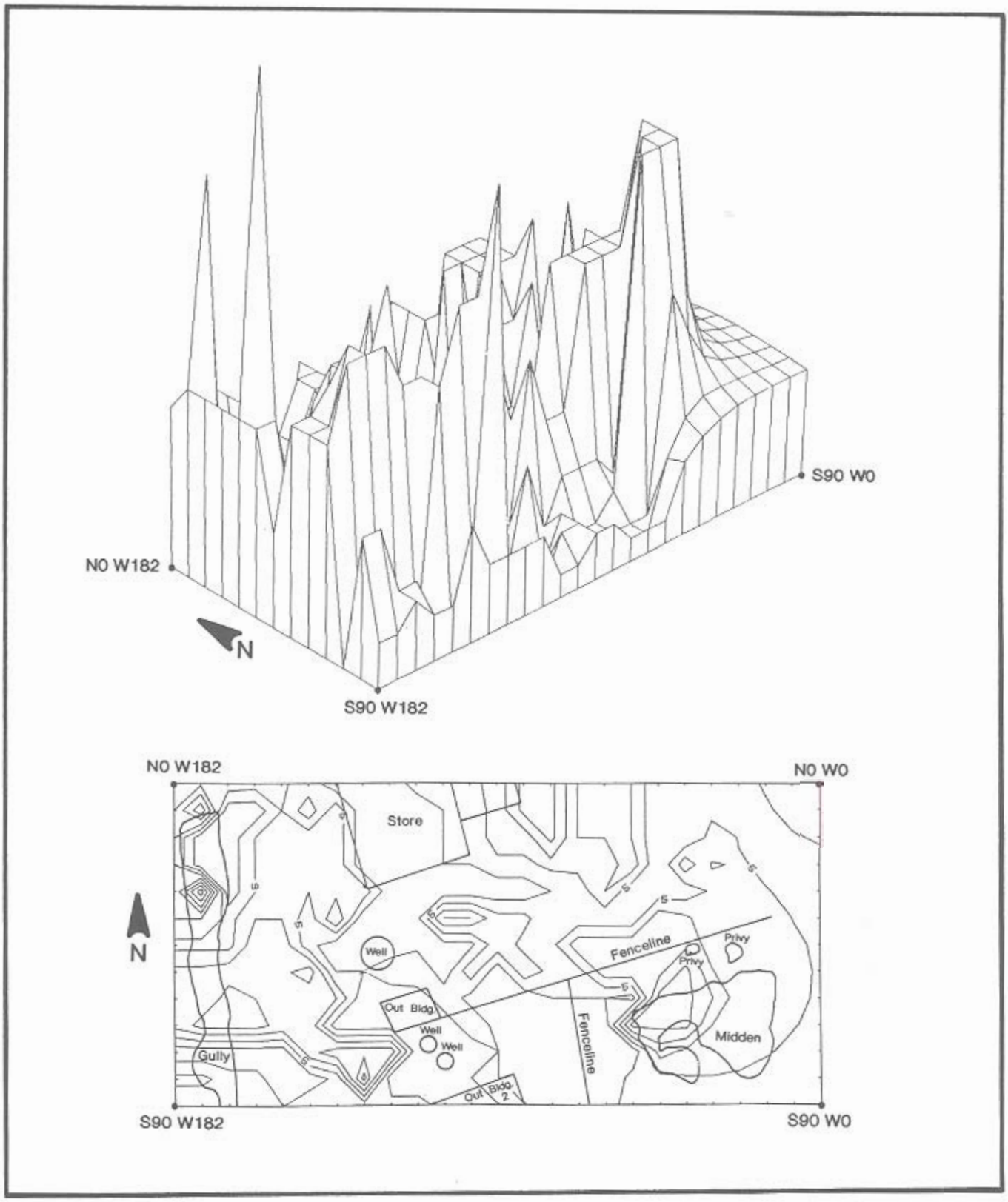

FIGURE 79

Distribution of Wire Nails, Plow Zone Excavation

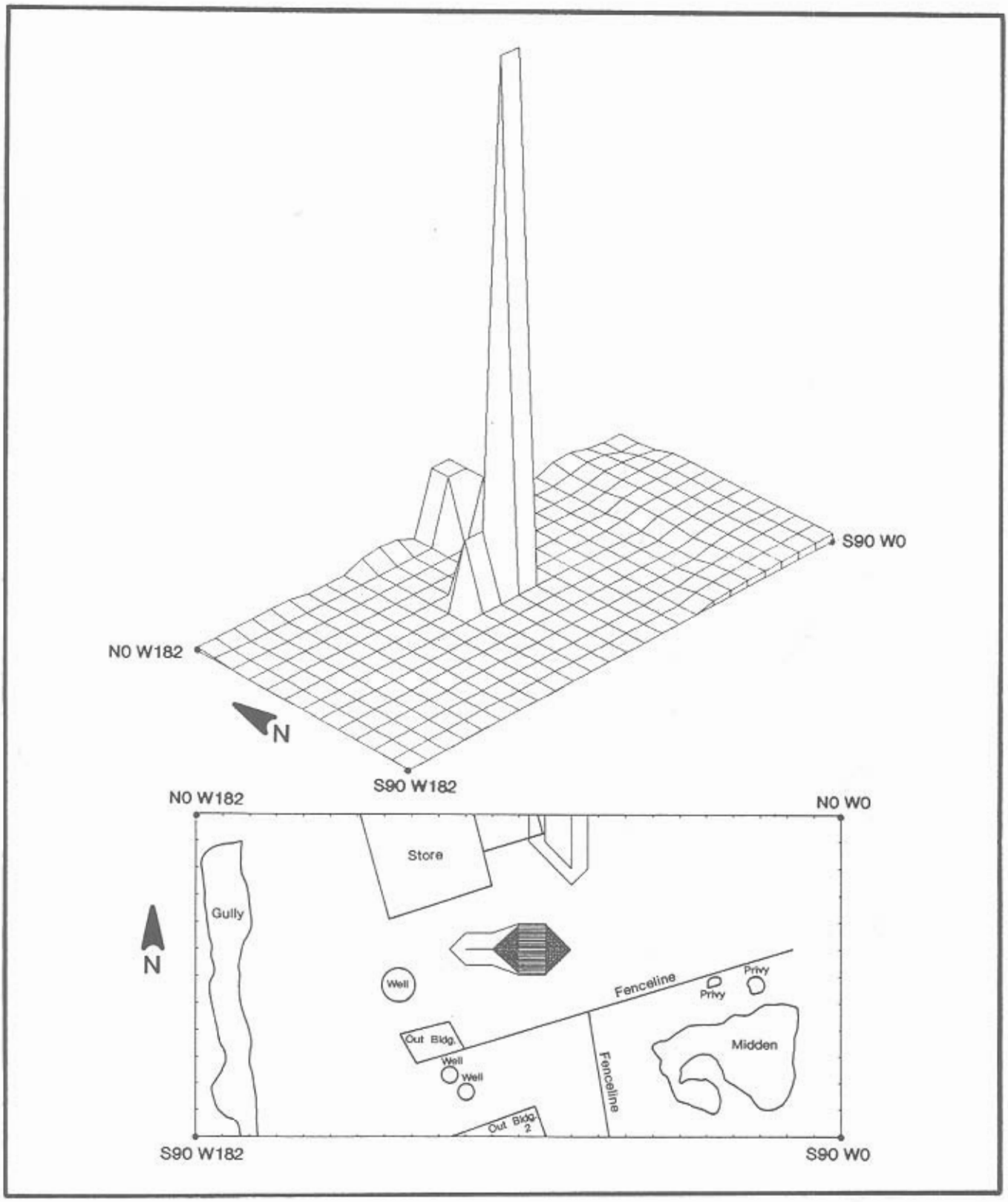

FIGURE 80

Distribution of Bottle Glass, Plow Zone Excavation

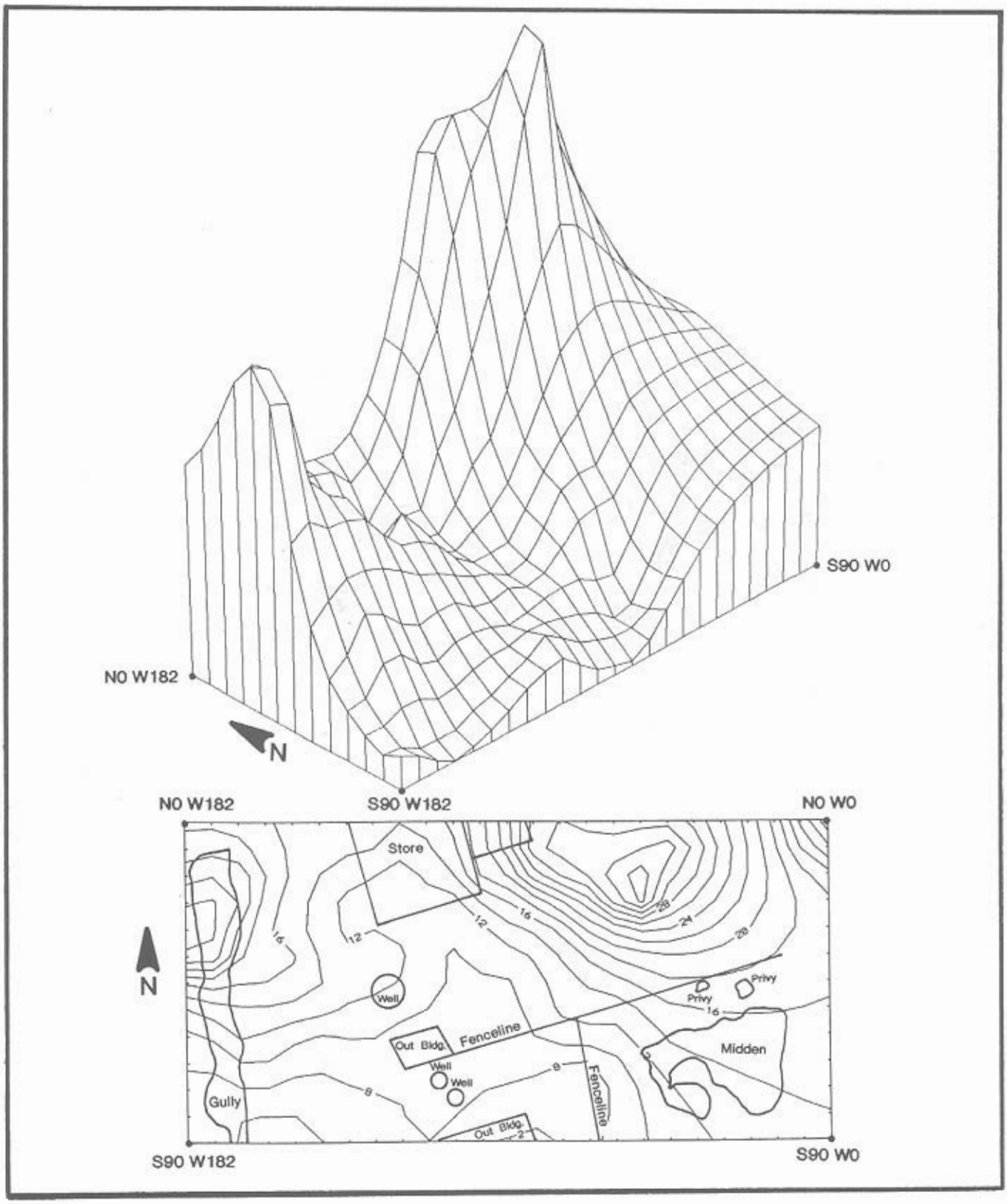

PLATE 15

Olive Green Case Bottle
Recovered During Backhoe Stripping of the Plow Zone

FIGURE 81

Distribution of Table Glass, Plow Zone Excavation

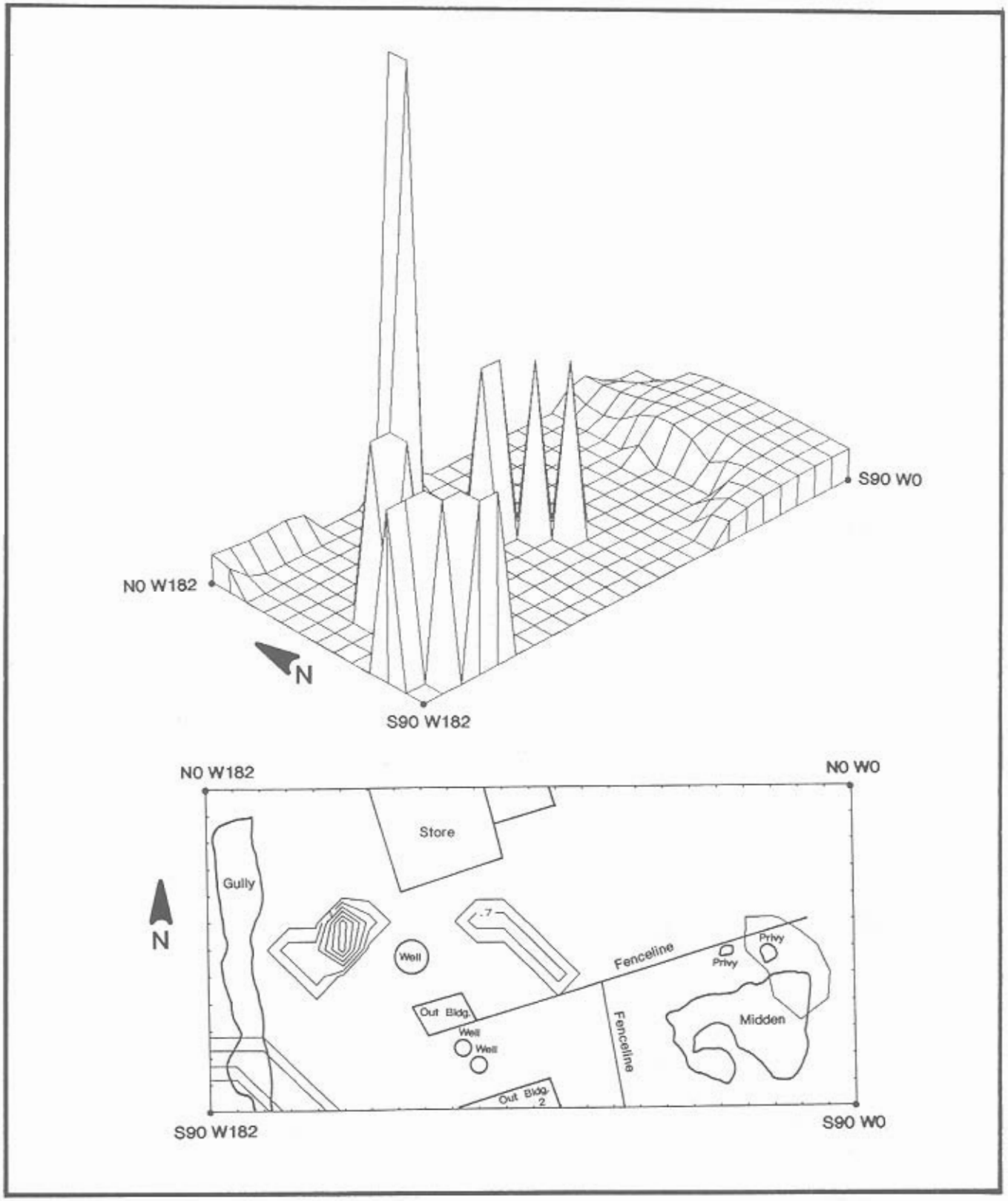

FIGURE 82

Distribution of Ceramics in Production Prior to 1775, Plow Zone Excavations

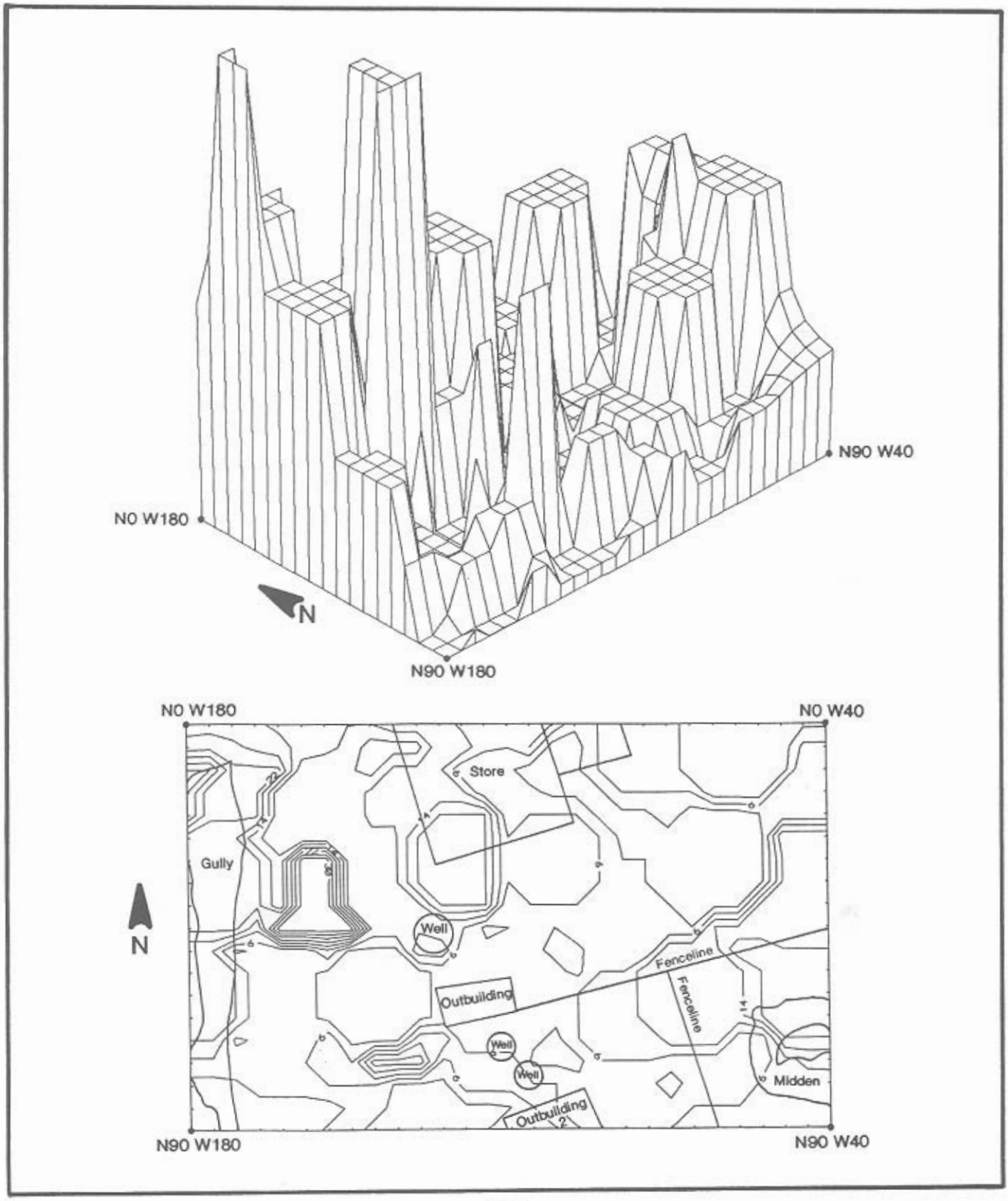

Black basalt stoneware (SN 27)
Staffordshire combed slipware (SN 56)
Clouded wares (SN 36)
Decorated delftware (SN 49)
Plain white delftware (SN 65)
Creamware (SN 22)
Transfer printed creamware (SN 23)

Distributed across the test area, two loci of greatest density rise above several other roughly equivalent "plateaus" of early ceramic concentrations -- at the gully's northern end and in the west yard just east of the gully. The latter corresponds with the westernmost features in the cluster off the store's southwest corner, and lies just west of the densest concentrations of window glass and wrought nails in this yard. Secondary concentrations extend south for a distance along the gully, and occur just southwest of Outbuilding I, west of the privies in an area reaching across the fenceline toward, but significantly not including, the middens, and in the yard between the store's back door and the northernmost well (2/51).

The distribution of those ceramic types no longer in production by 1775 offer an even more focussed view of the land use and trash disposal patterns of the store's earliest occupants. Seven types represented by 71 sherds form this group:

Molded white salt-glazed stoneware (SN 16)
Debased scratch-blue white salt-glazed stoneware (SN 24)
Scratch-blue white salt-glazed stoneware (SN 34)
White salt-glazed stoneware mugs (SN 40.1)
Wares decorated with Littler's Blue (SN 41)
Slip-dipped white salt-glazed stoneware (SN 48)
British brown stoneware (SN 54)

Despite the comparatively small sample size, a significant distributional pattern emerges. The store's first occupants deposited their ceramics principally in the yard west of the store, the densest concentration occurring over the northern end of the gully and adjacent yard (Figure 83). The presence also of nineteenth century sherds in the lower levels of the gully fill in this area suggests that slopewash of soils containing early sheet refuse from the store's west yard principally accounts for this fill. Thus this map does not present the original distribution pattern, in which the peak would have occurred to the east, closer to the store. Slopewash deflated the artifact-bearing sheet refuse strata in the west yard, and redeposited both soils and artifacts in the gully. The middens (Features 108-108C) form a second, though less important locus of discard of early ceramics. Virtually the entire east yard north of the midden and the yard west of the midden and south of Outbuilding I, on the other hand, received no early ceramics.

The next group of ceramics considered consisted of those types in production between the years of 1775 and 1805, roughly corresponding with John Darrach's ownership of the store. Twenty types (again excluding redwares) with production dates spanning at least a portion of this period were represented in the plow zone assemblages by 2348 sherds:

Finger painted creamware (SN 8)
Embossed pearlware (SN 9)
Willow transfer printed pearlware (SN 10)
Transfer printed pearlware (SN 11)
Polychrome painted pearlware (SN 12)
Annular pearlware (SN 13)
Monochrome painted pearlware (SN 17)
Blue shell-edged pearlware (SN 19.1)

FIGURE 83

Distribution of Ceramics No Longer in Production in 1775, Plow Zone Excavations

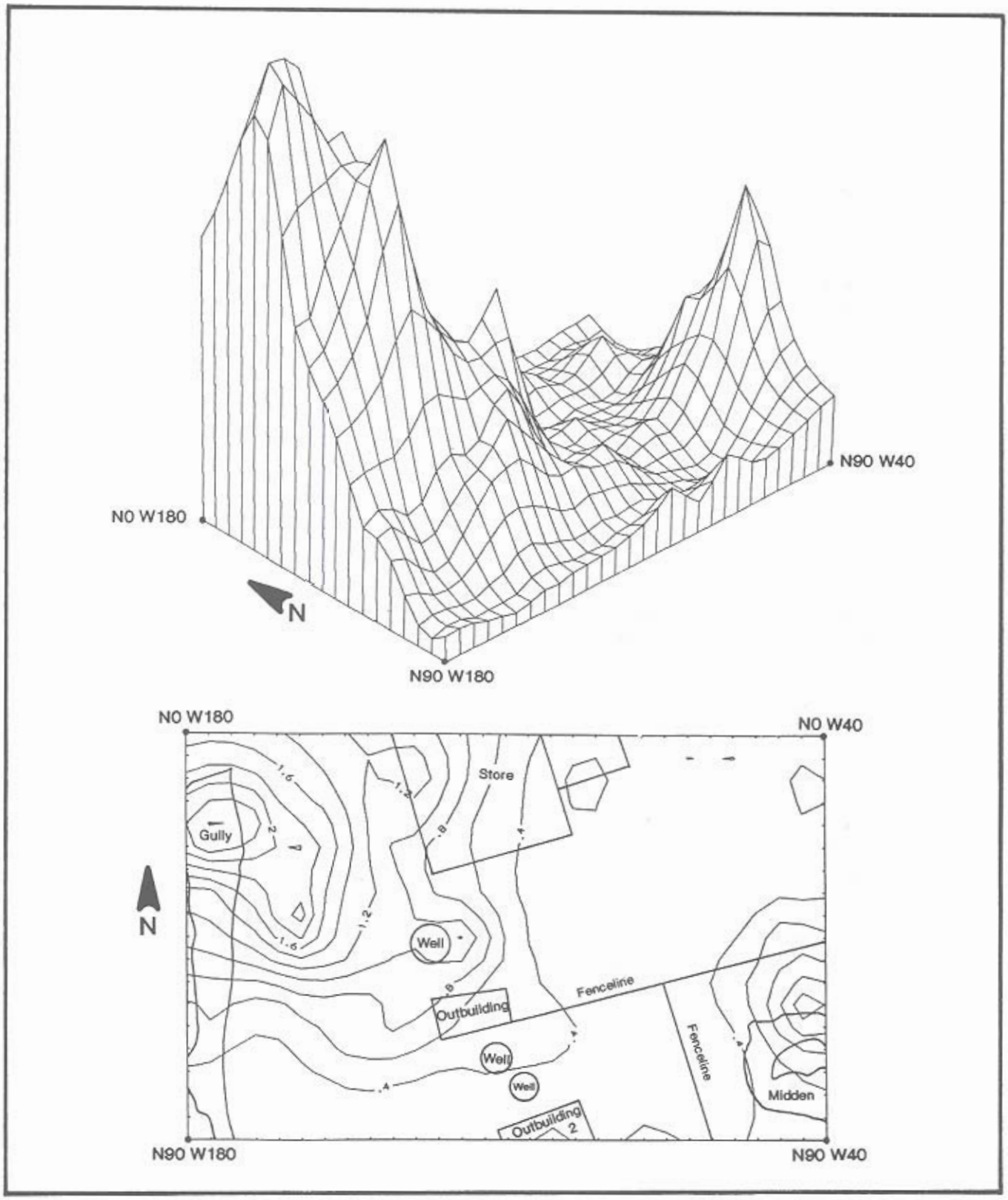

Green shell-edged pearlware (SN 19.2)
Pearlware (SN 20)
Creamware (SN 22)
Transfer printed creamware (SN 23)
Black basalt stoneware (SN 27)
English porcelain (SN 31)
Clouded wares (SN 36)
Nottingham stoneware (SN 46)
Decorated delftware (SN 49)
Staffordshire combed slipware (SN 56)
Plain white delftware (SN 65)
Luster decorated wares (SN 78)

This subassemblage points both to increased ceramic discard during this period and a more broadcast trash disposal pattern (Figure 84). One concentration occurs at the northern end of the gully, extending in decreasing density southeast across the west yard toward the outbuildings and wells. A second concentration spreads across the yard east of the addition, decreasing to the south across the midden's west end. Together the two concentrations define the perimeter of the open courtyard immediately behind the store, comparatively devoid of both features and cultural materials, except just outside the back door.

The ceramic types still in production in 1805 and later exhibit a somewhat similar deposition pattern (Figure 85). Thirty-eitht nineteenth century types are represented in the assemblage by 9638 sherds:

Whiteware (SN 2)
Annular whiteware (SN 2.1)
Whiteware, gild-edged decoration (SN 2.2)
Blue shell edged whiteware (SN 2.3)
Molded whiteware (SN 2.4)
Polychrome painted whiteware (SN 2.5)
Monochrome painted whiteware (SN 2.6)
Spatterware/ sponged whiteware (SN 2.7)
Stamped whiteware (SN 2.8)
Blue transfer printed whiteware (SN 2.9)
Flow blue whiteware (SN 2.10)
Transfer printed whiteware (SN 2.11)
Ironstone (SN 3)
Polychrome painted pearlware (SN 4)
Finger painted creamware (SN 8)
Embossed pearlware (SN 9)
Willow transfer printed pearlware (SN 10)
Transfer printed pearlware (SN 11)
Polychrome painted pearlware (SN 12)
Annular pearlware (SN 13)
Monochrome painted pearlware (SN 17)
Blue shell edged pearlware (SN 19.1)
Green shell edged pearlware (SN 19.2)
Pearlware (SN 20)
Creamware (SN 22)
Transfer printed creamware (SN 23)
Black basalt stoneware (SN 27)
Nottingham stoneware (SN 46)
Luster decorated wares (SN 78)

FIGURE 84

Distribution of Ceramics in Production Between 1775 and 1805, Plow Zone Excavations

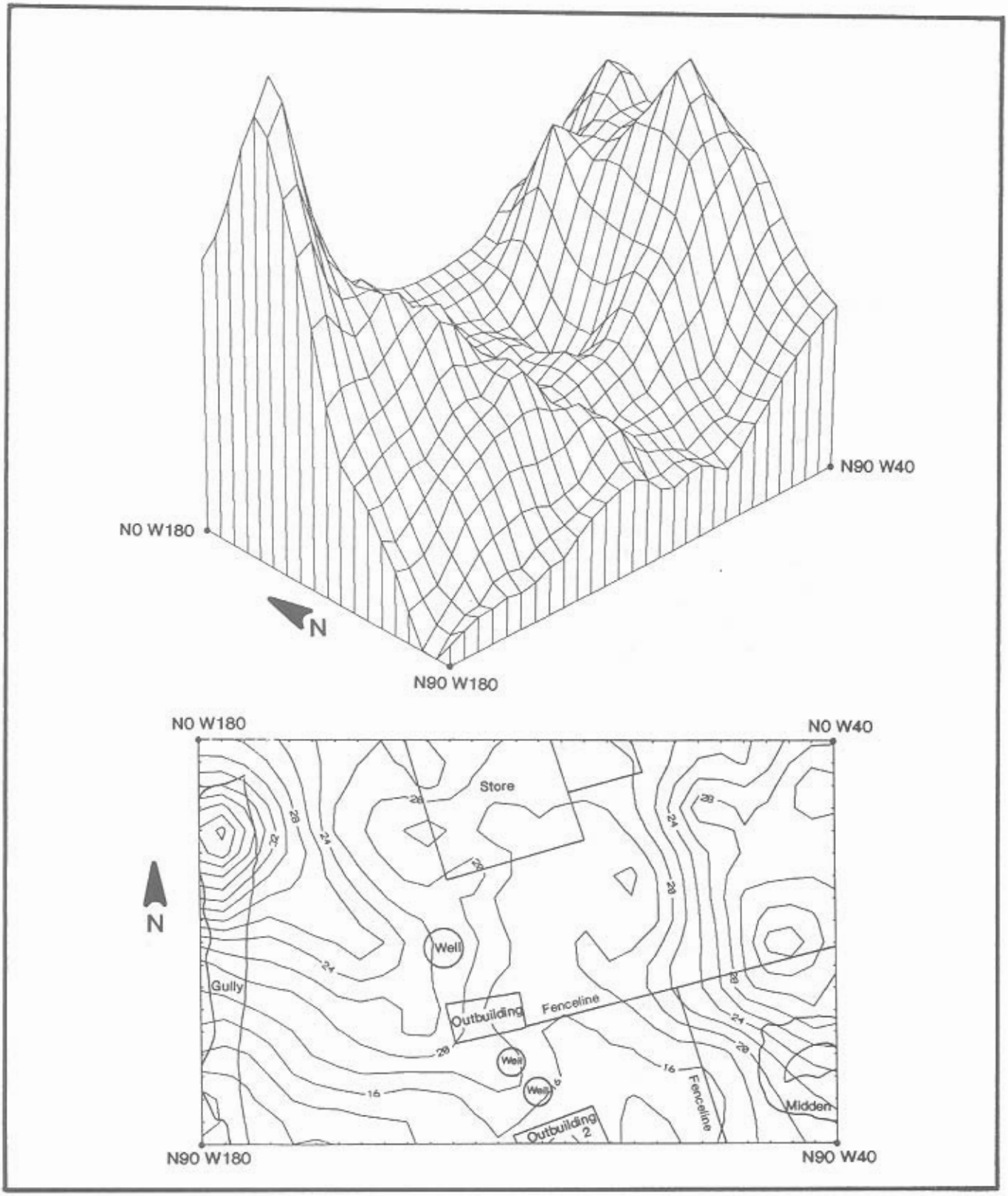

FIGURE 85

Distribution of Ceramics in Production in and/or after 1805, Plow Zone Excavations

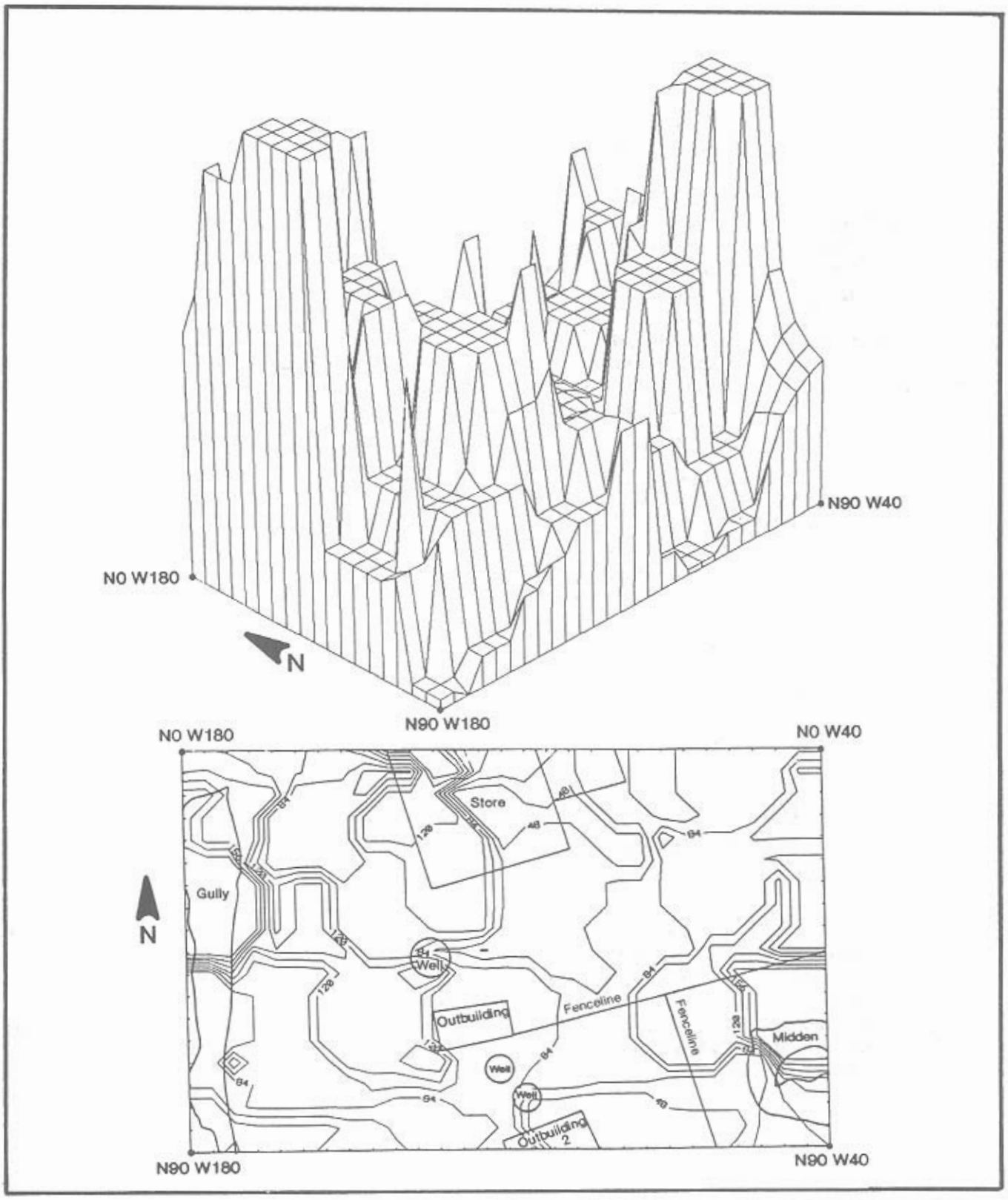

Yellowware (SN 79)
Rockingham (SN 80)
Redware, American (SN 81)
Slipped redware (SN 81.1)
Sgraffito slipware (SN 82)
Parian porcelain (SN 83)
Bone china (SN 84)
American porcelain (SN 85)
American stoneware (SN 86)

Nineteenth century ceramics (and eighteenth century types still in production as late as 1805) occurred across the tested portion of the site. Two peaks of concentration rise above the generalized distribution, however. One coincides with the northern half of the gully, extending further south along the gully than the concentrations exhibited by earlier ceramic types. The second corresponds with the midden's western end, extending north to the fenceline. Unlike the ceramics associated with John Darrach's ownership of the store property, these slightly later wares (with 17 types overlapping the two periods) occur with lesser frequency in the east yard north of the fenceline, but in greater frequency in the west yard adjoining the gully and to the west of the northern-most well and Outbuilding I.

Figure 86 assist in identifying the later occupants' disposal patterns, those in residence after Darrach's death in 1805. This map plots those nineteen ceramic types with production dates beginning after 1805 (a total of 3542 sherds) (Figure 86). of these, only polychrome pearlware (accounting for a mere 4 sherds), went out of production between 1805 and the time of the store's demolition in the 1860s.

Whiteware (SN 2)
Annular whiteware (SN 2.1)
Whiteware, gild-edged decoration (SN 2.2)
Blue shell edged whiteware (SN 2.3)
Molded whiteware (SN 2.4)
Polychrome painted whiteware (SN 2.5)
Monochrome painted whiteware (SN 2.6)
Spatterware/ sponged whiteware (SN 2.7)
Stamped whiteware (SN 2.8)
Blue transfer printed whiteware (SN 2.9)
Flow blue whiteware (SN 2.10)
Transfer printed whiteware (SN 2.11)
Ironstone (SN 3)
Yellowware (SN 79)
Rockingham (SN 80)
Redware, American (SN 81)
Sgraffito slipware (SN 82)
Parian porcelain (SN 83)
Bone china (SN 84)

Again, these nineteenth century ceramics are distributed across the test area. The greatest concentration, however, occurs in an area not coinciding with any of those exhibited by the earlier types. Its location in the yard just west of Outbuilding I suggests that building's use in the nineteenth century as a summer kitchen or for other purposes associated with the tenants' foodways. At the very least, the focus of household trash disposal shifted away from the yard immediately west of the store and the late eighteenth through early nineteenth century middens to this new location. Another, less distinct yet still discernible pattern appears as well, as for the first time ceramics also cluster in a rough swath along the northeast -- southwest fenceline separating the inner and outer yards.

FIGURE 86

Distribution of Ceramics Not in Production Before 1805, Plow Zone Excavations

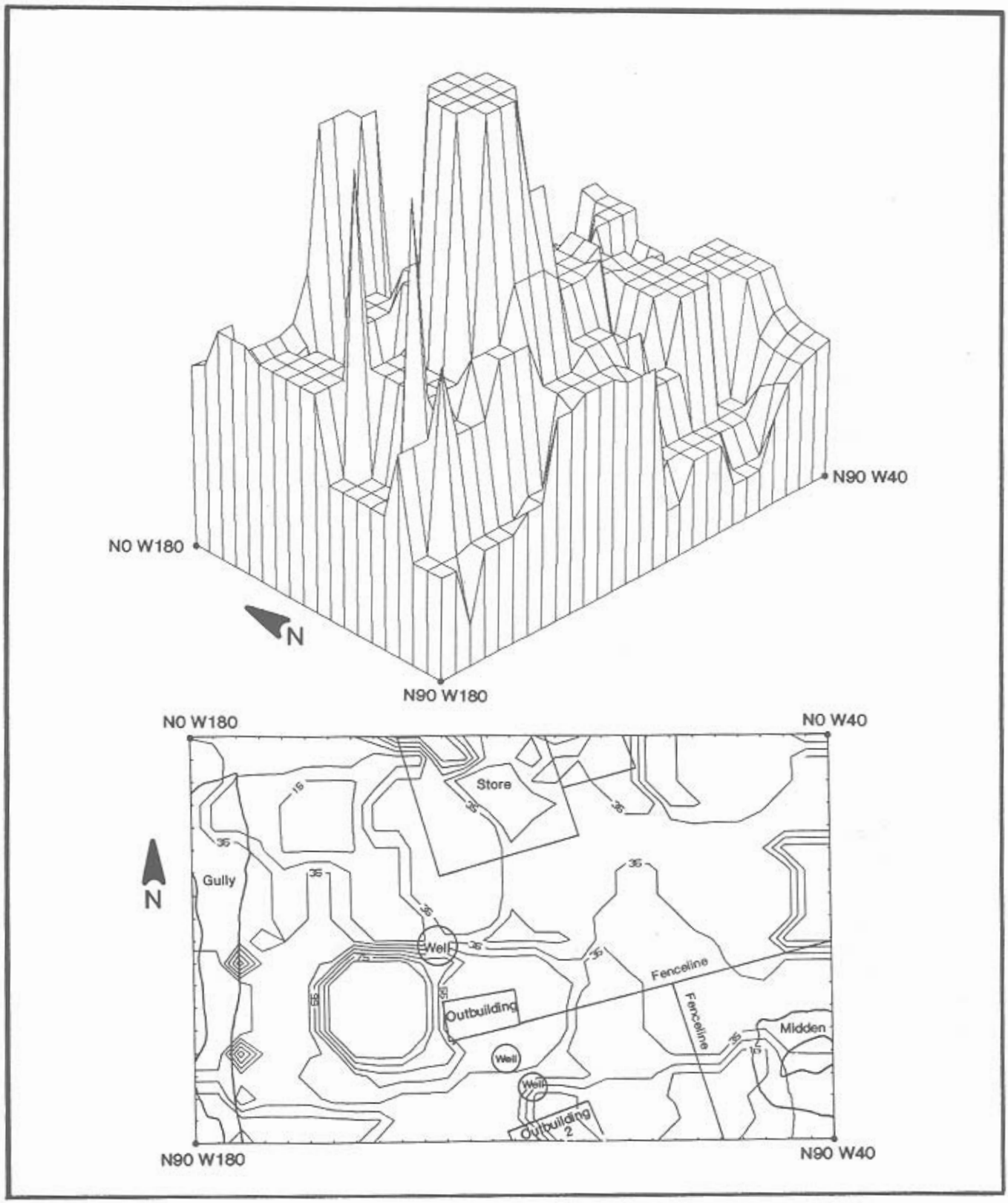

Finally, the concentration of the nineteenth century ceramics recovered from the plow zone overlying the store's remains probably represent wares left in the building at the time of its demolition.

As the best indicator of food preparation and storage activities, the distribution of the utilitarian redwares (SN 81), yellowwares (SN 79), and stonewares (SN 54 and 86) was plotted (a total of 3620 sherds) (Figure 87). Concentrations of these wares coincide most closely with the eighteenth through early nineteenth century types, principally the creamwares and pearlwares. Two substantial peaks appear, in the northern half of the gully and at the middens south of the fenceline. Several reconstructable redware vessels were found in the store's cellar, and thus the peak overlying the store is not surprising. Only a few of these wares correlate with the concentration of nineteenth century ceramic types west of Outbuilding I, however (Figure 86). By the latter 1820s, then, whitewares may have substantially replaced redwares even for food preparation activities.

The 151 clay tobacco pipe fragments' distribution correlates only in part with those of other artifact types (Figure 88). The store's occupants, workers, customers, and visitors tossed by far the majority of their waste pipe stems into the yard west of the store, from whence slopewash carried some into the gully. A secondary concentration occurs west of Outbuilding I, beyond the nineteenth century ceramic concentration closer to the gully's edge. Finally, a few appear in the southeast yard, south of the bottle glass concentration, in association with the late eighteenth century ceramic concentration.

A series of dense, localized concentrations characterize the distribution of the 295 food bone fragments comprising the plow zone collection (Figure 89). The largest overlays the northern end of the gully, coincident with concentrations of other artifacts, particularly tobacco pipes, wrought nails, cut nails, bottle glass, and eighteenth and early nineteenth century ceramics. Secondary clusters appear around the store's western and southern perimeter, in the vicinity of the earliest well (Feature 2/51) north of the nineteenth century ceramic concentration, and in two loci between Outbuilding II, the wells and the middens, south of the fenceline.

The lack of coincidence between the distributions of food bone and the 478 shell fragments is somewhat curious (Figure 90). The greatest shell concentration occurs just west of Outbuilding I, in direct correlation with the concentration of nineteenth century ceramics. Others appear in the west yard of the store and in the gully west of the first concentration.

In conclusion, then, this distributional analysis has provided important information on land use, activity areas, and trash disposal practices at the Darrach Store site. Distributions of window glass and of the temporally diagnostic nail types support the other archaeological evidence pointing to an eighteenth century date for the brick store, and later, probably early nineteenth century dates for the additions, outbuildings, and perhaps major renovations of the store. The food waste, ceramic, glass and tobacco pipe distributions document temporal and functional differences in disposal. A concentration of bottle and table glass, pre-1825 ceramic types, tobacco pipe fragments, and food bone over the gully's northern end and in the west yard marks this as an early trash disposal area and perhaps garden, livestock yard and/or workyard. This yard adjoins the early residential side of the building, the storeroom having occupied the eastern half of the structure (see below). Most of the bottle glass, however, came from a segregated dump in the east yard probably selected for its distance from the more heavily trafficked and used portions of the yard. Its locus on the original storeroom side of the building may also be significant, linking the bottles and thus their contents to the storekeepers and their customers rather than the tenants, at least before the early nineteenth century renovation of the store.

At least by 1810 the Darrach Store's landscape seems to have undergone a dramatic transformation. Darrach or his heirs remodeled the store, constructed an addition, outbuildings, and fences, and possibly dug two privies (at least they were in use during this time) and one or two wells. In addition, a large midden on the opposite side of the yard from the earlier trash disposal areas was receiving quantities of household trash. Within twenty years, the store's tenants had again altered their use of the land, abandoning the middens and privies and dumping much of their household refuse, most notably shell, food bone and ceramics, in a small area west and northwest of Outbuilding I, possibly then in use as a kitchen.

FIGURE 88

Distribution of Tobacco Pipe Fragments, Plow Zone Excavations

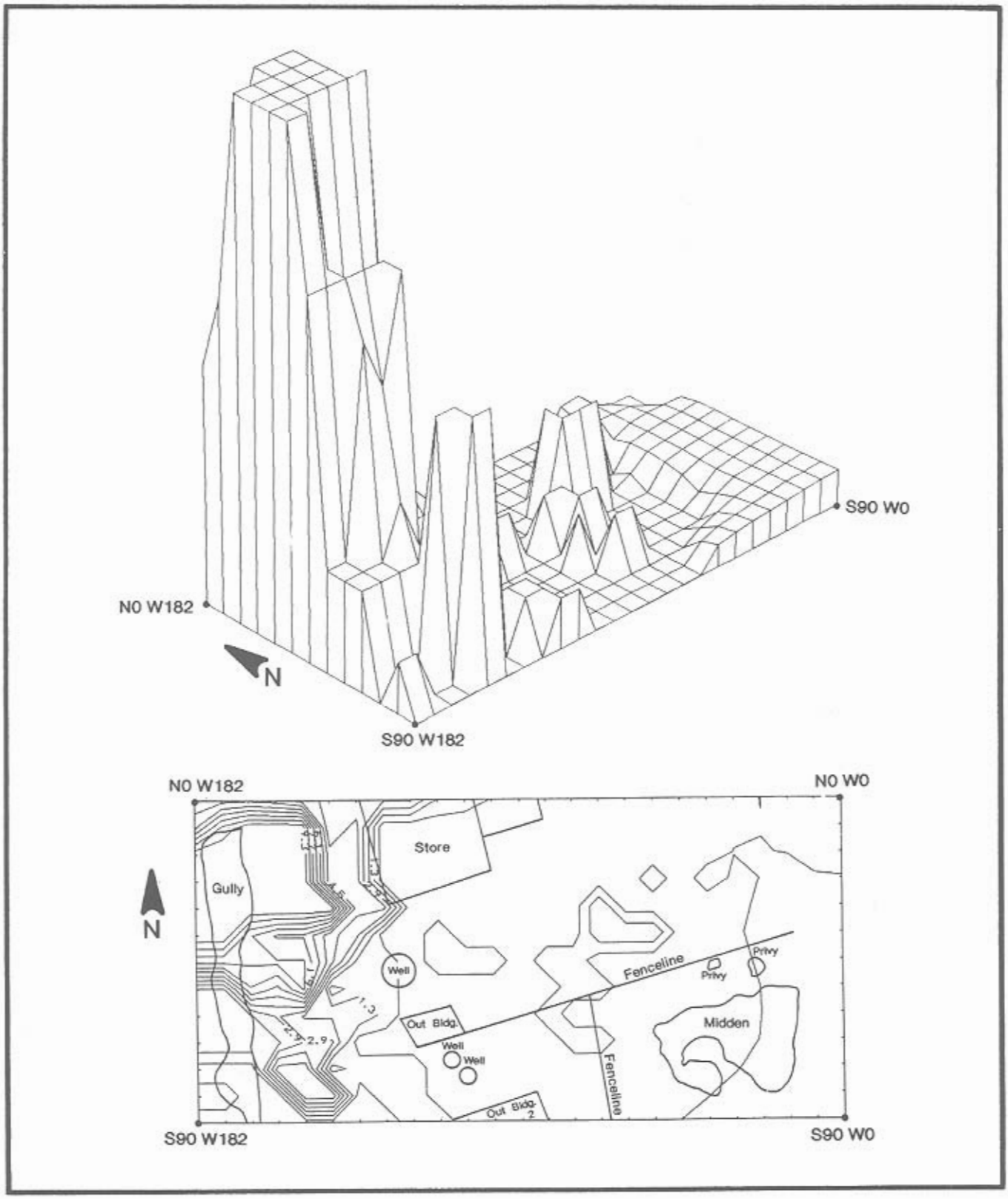

FIGURE 87

Distribution of Utilitarian Ceramics, Plow Zone Excavations

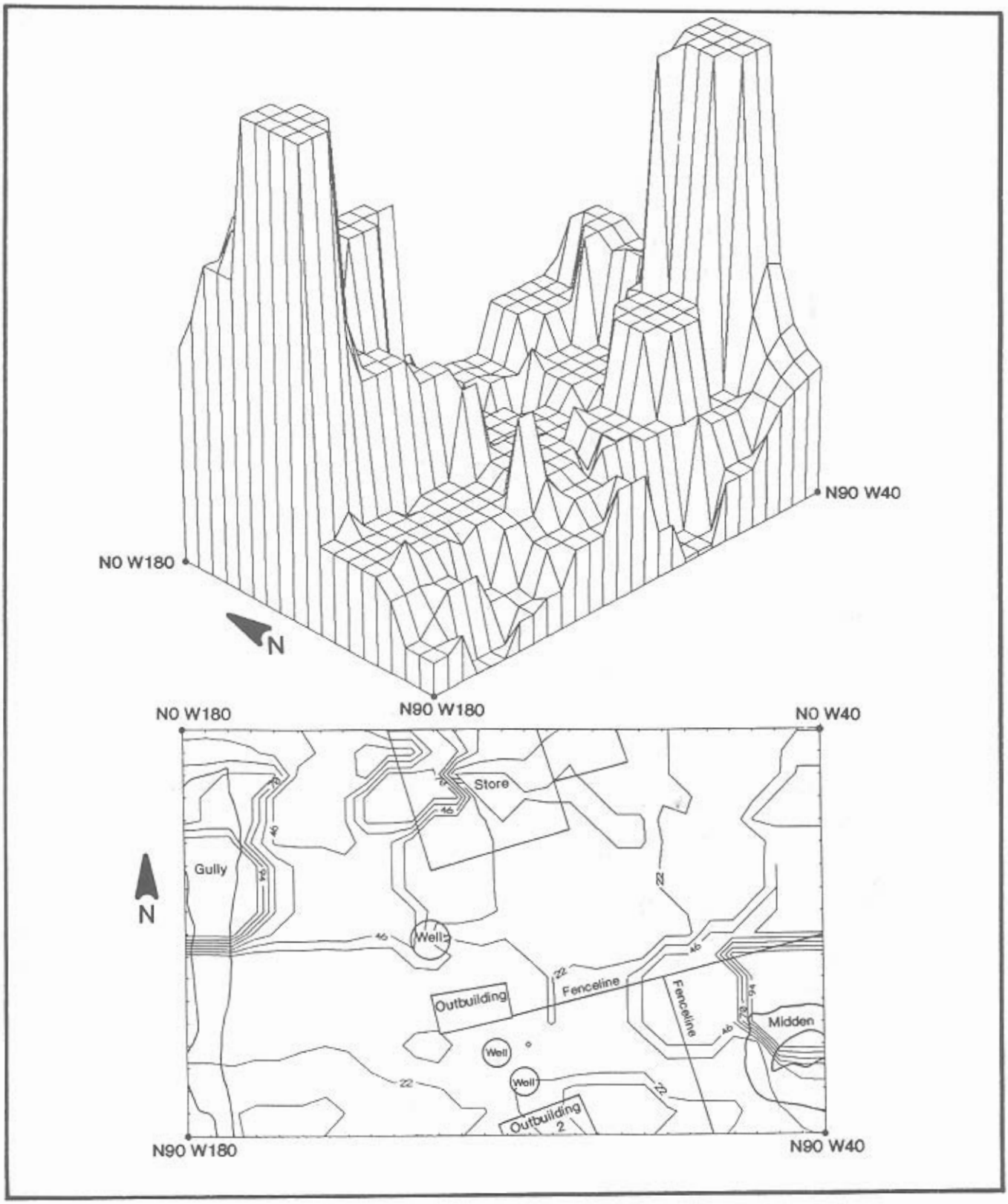

FIGURE 90

Distribution of Shell, Plow Zone Excavations

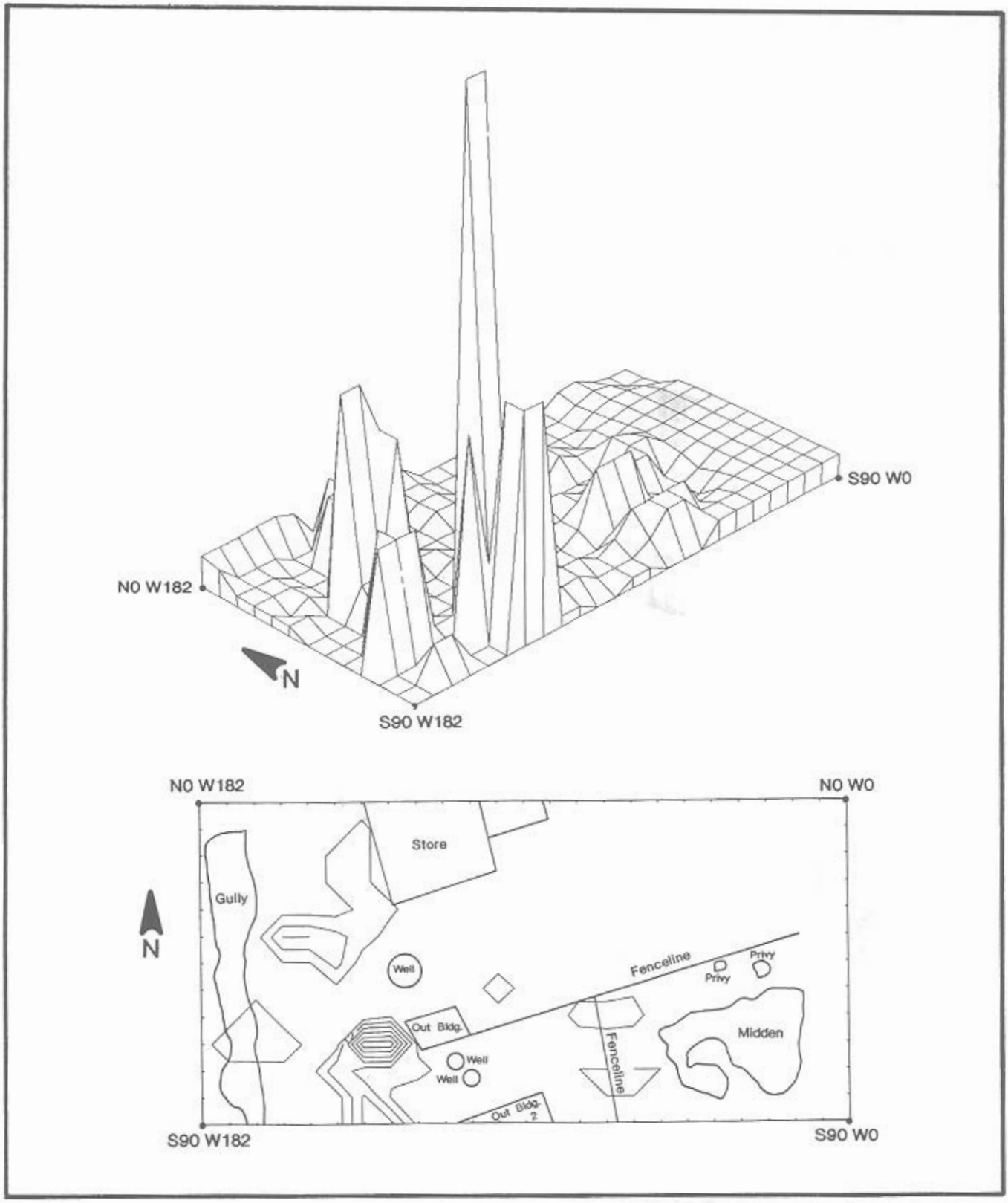

FIGURE 89

Distribution of Faunal Remains, Plow Zone Excavations

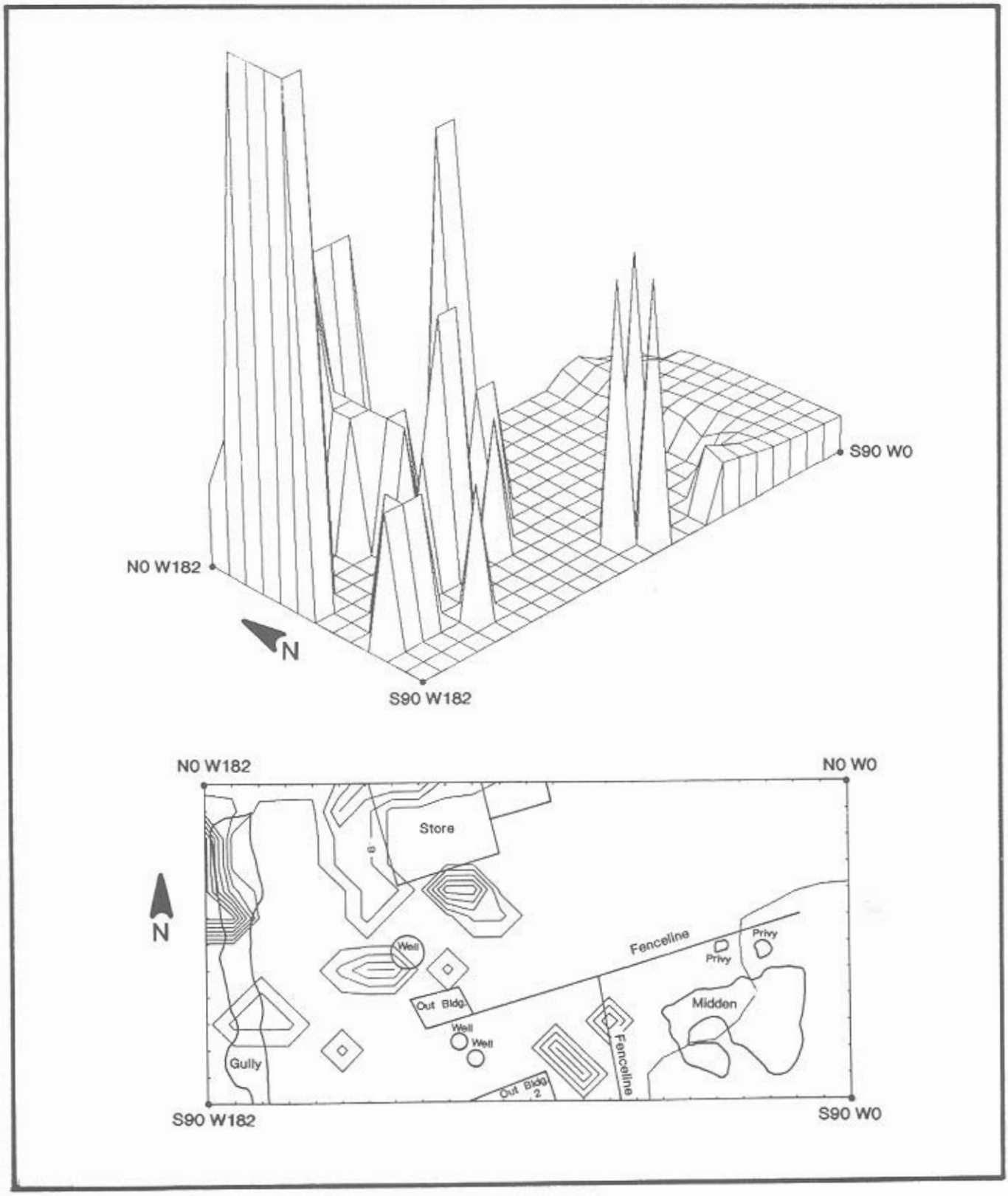

Clay tobacco pipes clustered almost exclusively in the yards west of the store. To a certain extent, the distribution merely corresponds to that of the other eighteenth century materials. However, it extends further south toward the rear of the yard, and tobacco pipes are notably absent from the middens. The distribution instead appears to reflect functional land use patterns, with the west yard the locus of early domestic activities including gardening and livestock raising, and later a delivery, loading and unloading place for the store merchandise and agricultural produce Patterson shipped in and out of the landing at Duck Creek, and perhaps stored in the southern outbuilding.

The food bone distribution does not correspond completely with those of the other materials associated with the store's tenants' foodways, notably the ceramics. The concentration along the store's south wall appears to mark the location of a rear door into the original residential side of the store. Those north of Outbuilding I support the interpretation of this structure's use as a kitchen in the nineteenth century. The two between the other outbuilding and the middens remain anomalous, unless they mark an area occasionally used for butchering and meat processing.

Conclusions and Interpretations

Four research themes derived from the Phase I and II research, the general research plan for the Delaware Route 1 Project (Custer and Bachman 1986; Custer, Bachman, and Grettler 1986; 1987), and the Management Plan for Delaware's Historical Archaeological Resources (De Cunzo and Catts 1990) guided the data recovery investigations at the Darrach Store site - the historical research, the field excavations, and the analyses presented here. Have the specific research questions posed been addressed? What has been learned from these investigations? In this section, the diverse strands of evidence are drawn together in concluding syntheses focussed on each of the four research themes. From here, the Darrach Store site can be placed into a broader comparative context.

The Social and Economic Context of Family and Mercantile Activity in the Smyrna/Duck Creek Hundred Community

As a young man in the 1760s, John Darrach arrived in Duck Creek Hundred with his brothers, emigrants from County Antrim, Ireland. Before the century's end, he numbered among the wealthiest one percent of the Hundred's residents, a member of the landed and mercantile gentry. Not insignificant to his impressive though not meteoric rise, on the eve of the Revolution he had married the daughter of successful Duck Creek merchant William White. Through this single act, and the events which transpired three years later when White died, the parameters organizing social and economic life in Duck Creek begin to emerge - religion (both the Whites and Darrach were Presbyterians), national origin (Darrach was Scotch-Irish, and the Whites were Scottish), and family. Darrach administered White's estate in 1778, and he and his wife Jane White Darrach were the principal if not sole beneficiaries.

Through his mercantile activities, White had prospered, and he chose to express his economic and social position in the community through visible, material means. Gold and silver buckles and buttons accented his dress, the family served tea with silver utensils, and the Whites prominently displayed books and maps in their home. Most visible and perhaps symbolic of all, however, stood White's imposing brick house and store, dual monuments to the institutions on which he built his life - family and commerce. Probably White's "new" house as mentioned in his 1778 estate inventory, it was built along the axis between the growing town of Duck Creek Crossroads and the landing on which its economy was based. Even more significantly, he built his house and store of brick at a time when far fewer than 10 percent of the hundred's structures were constructed of this more expensive, more permanent material.

After setbacks during the uneasy times of the Revolutionary era, John and Jane Darrach further consolidated their family's position in the local gentry, one founded on a complex of land, agriculture and trade. By the century's end, they owned a 450 acre estate, several other local properties tenanted by farmers and