non-stone tools, took place, to a limited degree. The small possible hearth located in the north half of the site may have been used in processing activities, or for warmth. One apparently specialized but unknown activity also took place in this area, utilizing flakes with small notches.

The south half of the site is characterized by smaller numbers of flakes, but a higher incidence of cores and utilized flakes. Activities in the area were probably more domestic, involving the processing of animal and/or plant resources, and possibly cooking. It is likely that the primary jasper cores found here were the source of the expediently utilized flakes. A very small number of cobbles may also have been worked in this area, and a limited amount of jasper biface reduction may have taken place as well.

DISCUSSION AND CONCLUSIONS

The artifact assemblages and their distributions indicate that the Brennan Site functioned as a transient procurement site where the secondary reduction of jasper bifaces was the primary activity. Furthermore, the occupation of the Brennan Site appears to have been associated with quarrying activities at the Delaware Chalcedony Complex (Custer, Ward, and Watson 1986). The stone tool kit is quite limited and is composed primarily of early stage biface rejects, flake tools, and utilized flakes. One late stage biface was also present in the assemblage and two discarded projectile points were recovered in Phase II excavations. The dominant artifact class in the assemblage is waste flakes resulting from the reduction of jasper bifaces and cores. Some edge sharpening also appears to have taken place at the site, as well as a small degree of processing activity. The occupation of the site was long enough to warrant the construction of a hearth, but no evidence of structures was found. The presence of the Brennan Site secondary lithic reduction station at an anomalously large distance from a quarry source has implications for regional settlement patterns and the organization of lithic technologies during the Woodland I Period.

Regional Lithic Technologies

The Brennan Site can be compared with other sites in the Fall Line and High Coastal Plain. Table 8 shows the percentage of cortex and raw material use among a variety of Woodland I lithic assemblages, and Figure 28 shows the locations of the sites from which these assemblages were derived. Due to the various sizes of the artifact assemblages, a difference-of-proportion test (Parsons 1974) was applied to compare the sites listed in Table 8. Although samples from some of the sites are quite small, they can nevertheless be compared with the other sites using the difference-of-proportion test.

Table 9 lists the sites in rank order by percentage frequencies of cortex, cryptocrystalline use, and quartzite and quartz use. Sites with no significant differences in percentages are joined by brackets. Table 9 was prepared from a subset of site comparisons generated in an earlier report (Catts, Hodny, and Custer 1989) to which the Brennan Site was added.

TABLE 8

Comparative Lithic Resource Use for Northwestern Delaware

Site	Function	Total Artifacts	Cortex %	Cryptocrystalline %	Quartzite/ Quartz %	References
7NC-F-61A	Quarry Reduction	1,922	1	99	1	this report
7NC-D-129	Procurement	2,073	6	75	24	Custer, Watson, Hoseth, and Coleman 1988
7NC-E-46	Hunting/ Staging	10,512	20	22	69	Custer and Bachman 1984
7NC-D-54	Cobble Reduction Base Camp	1,288	28	32	59	Custer, Sprinkle, Flora, and Stiner 1981
7NC-D-55A	Cobble Reduction Base Camp	132	45	16	69	Custer, Sprinkle, Flora, and Stiner 1981
7NC-D-55B	Cobble Reduction Base Camp	2,304	29	8	88	Custer, Sprinkle, Flora, and Stiner 1981
7NC-E-6A Area 2A	Macro-band Base Camp	5,515	9	61	33	Custer 1982
7NC-E-6A Area 2B	Macro-band Base Camp	6,206	9	80	23	Custer 1982
7NC-D-5	Quarry Reduction	94	0	60	32	Custer, Ward, and Watson 1986
7NC-D-3	Quarry Reduction	368	0	51	38	Custer, Ward, and Watson 1986
7NC-D-19	Quarry Reduction	653	0	74	26	Custer, Ward, and Watson 1986

TABLE 9

Summary of Lithic Resource Use Patterns for Northwestern Delaware

Cortex		Cryptocrystalline		Quartzite/ Quartz ratio	
7NC-D-5	Quarry Reduction-0%	7NC-D-55B	Cobble Reduction Base Camp-8%	7NC-F-61A	Quarry Reduction-1%
7NC-D-3	Quarry Reduction-0%	7NC-D-55A	Cobble Reduction Base Camp-16%	7NC-E-6A(2B)	Macro-band Base Camp-23%
7NC-D-19	Quarry Reduction-0%	7NC-E-46	Hunting/ Staging-22%	7NC-D-129	Procurement-24%
7NC-F-61A	Quarry Reduction-1%	7NC-D-54	Cobble Reduction Base Camp-32%	7NC-D-19	Quarry Reduction-26%
7NC-D-129	Procurement-6%	7NC-D-3	Quarry Reduction-51%	7NC-D-5	Quarry Reduction-32%
7NC-E-61(2A)	Macro-band Base Camp-9%	7NC-D-5	Quarry Reduction-60%	7NC-E-6A(2A)	Macro-band Base Camp-33%
7NC-E-6A(2B)	Macro-band Base Camp-9%	7NC-E-6A(2A)	Macro-band Base Camp-61%	7NC-D-3	Quarry Reduction-38%
7NC-E-46	Hunting/ Staging-20%	7NC-D-19	Quarry Reduction-74%	7NC-D-54	Cobble Reduction Base Camp-59%
7NC-D-54	Cobble Reduction Base Camp-28%	7NC-D-129	Procurement-75%	7NC-D-55A	Cobble Reduction Base Camp-69%
7NC-D-55B	Cobble Reduction Base Camp-29%	7NC-E-6A(2B)	Macro-band Base Camp-80%	7NC-E-46	Hunting/ Staging-69%
7NC-D-55A	Cobble Reduction Base Camp-45%	7NC-F-61A	Quarry Reduction-99%	7NC-D-55B	Cobble Reduction Base Camp-88%

FIGURE 28

Locations of Archaeological Sites used for Lithic Assemblage Comparisons

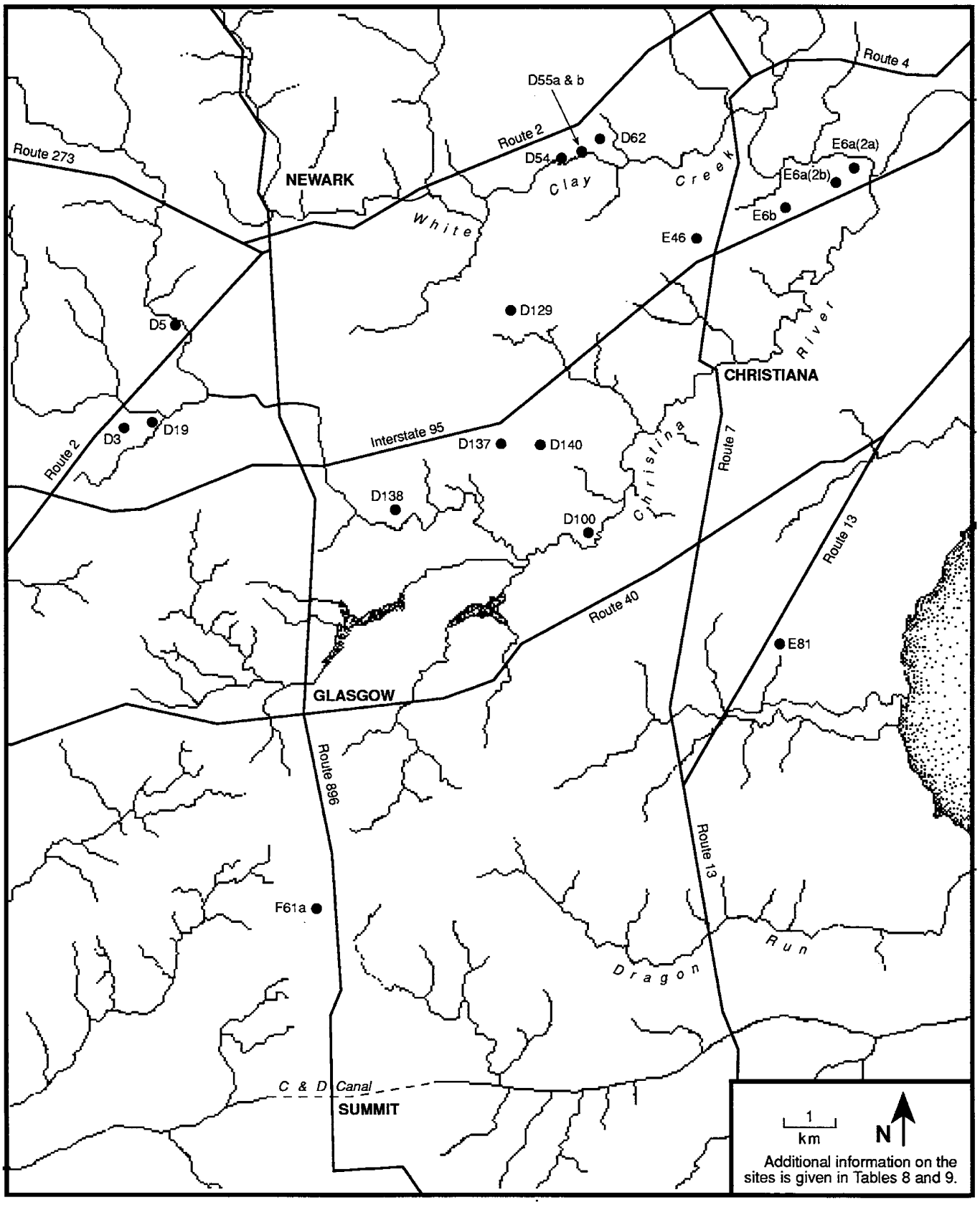

For cortex percentage, which is an indicator of cobble resource use, the Brennan Site is grouped with three other Delaware Chalcedony Complex quarry reduction sites (7NC-D-3, 7NC-D-5, and 7NC-D-19). No cortex was present on lithic artifacts in the assemblages from these four sites. For cryptocrystalline stone usage, the Brennan Site ranks highest, and the percentage of cryptocrystalline use at the Brennan Site is significantly different from the next highest ranking site — Site 7NC-E-6A, Area 2B. Quartzite and quartz usage at the Brennan Site ranks lowest among all the sites and is again significantly different from the site closest in the rankings, again — Site 7NC-E-6A, Area 2B. The quarry reduction assemblages are from surface collections; therefore, debitage is probably under-represented. Indeed, the collection from 7NC-D-5 (Custer, Ward, and Watson 1986) contains no flakes at all. The Brennan Site assemblage, on the other hand, is 98% debitage.

The Brennan Site's grouping with other quarry reduction sites of the Delaware Chalcedony Complex is understandable, but the incidence of cryptocrystalline materials in the assemblage is puzzling. Cryptocrystalline materials are much more common at the Brennan Site, which is 8 km south of Iron Hill, than they are at quarry reduction sites located within 2 km of Iron Hill. An examination of the summary catalogues of the quarry reduction sites (7NC-D-3, 7NC-D-5, and 7NC-D-19) indicates that many of the non-cryptocrystalline tools in the assemblages were discarded points and bifaces. The discarded cryptocrystalline tools may represent items brought to the sites, but replaced with fresh tools that were then carried away from the sites.

In sum, the data suggests that primary cryptocrystalline jasper was the preferred material at the Brennan Site. Furthermore, the likely sources of the jasper were the quarries of the Delaware Chalcedony Complex at Iron and Chestnut hills.

Both bifaces and cores are present in the artifact assemblage from the Brennan Site. The use of flakes for the production of unifacial tools and a portion of the bifacial tools, as well as expedient needs, testifies to the importance of core technology at the Brennan Site. However, the presence of early stage bifaces rejected in the course of manufacture and discarded late stage bifaces, as well as a great quantity of waste flakes, indicates that the production of bifaces was also quite important at the site. An attribute analysis of the debitage recovered from the Brennan Site was undertaken in an attempt to shed more light on lithic technology practices at the site.

Flake attributes for debitage from the Brennan Site were compared to the same attributes for debitage assemblages from the Fifty Site (44WR50) and the Crane Point Site. The Fifty Site is a Late Paleo-Indian/Early Archaic hunting and processing site in the Shenandoah Valley of Virginia (Carr 1975, 1986) where primary lithic resources are readily available. The artifact assemblage from the Fifty Site was derived from cores. The Crane Point Site is a Late Paleo-Indian/Early Archaic base camp site on the Eastern Shore of Maryland (Lowery and Custer 1990) where lithic resource availability is low. The artifact assemblage from this site was derived from bifaces. Tables 6 and 10 show the distribution of attributes for a sample of 200 flakes from the Brennan Site, 100 flakes from the Fifty Site, and 50 flakes from the Crane Point Site.

TABLE 10

Flake Attribute Analysis Control Data

44WR50 site - Core Reduction

Flake type		Size		Platform shape		Platform preparation	
Complete	63	<2 cm	49	Triangular	10	Present	10
Proximal	19	2-5 cm	46	Flat	35	Absent	72
Medial	4	>5 cm	5	Round	37	No observation	18
Distal	14			No observation	18		
		Scar count				**Directions count**	
Cortex		Mean	= 1.33	**Remnant biface edge**		Mean	= 0.73
Present	0	Standard deviation	= 1.22	Present	3	Standard deviation	= 0.60
Absent	100			Absent	97		

Note: This table is based on a sample of 100 flakes

Crane Point site - Biface Reduction

Flake type		Size		Platform shape		Platform preparation	
Complete	9	<2 cm	6	Triangular	20	Present	28
Proximal	27	2-5 cm	44	Flat	6	Absent	7
Medial	6	>5 cm	0	Round	9	No observation	15
Distal	8			No observation	15		
		Scar count				**Directions count**	
Cortex		Mean	= 3.00	**Remnant biface edge**		Mean	= 2.00
Present	4	Standard deviation	= 0.34	Present	10	Standard deviation	= 0.57
Absent	46			Absent	40		

Note: This table is based on a sample of 100 flakes

TABLE 11

Comparison of Flake Attribute Analysis Data

Attribute	Variable	Brennan	44WR50	Crane Point
Flake type	Complete	33%	63%	18%
	Proximal	22	19	54
	Medial	22	4	12
	Distal	22	14	16
Cortex	Present	0	0	8
	Absent	100	100	92
Size	<2 cm	54	49	12
	2-5 cm	43	46	88
	>5 cm	3	5	0
Platform shape	Triangular	21	10	40
	Flat	14	35	12
	Round	19	37	18
	No observation	46	18	30
Remnant biface edge	Present	2	3	20
	Absent	98	97	80
Platform preparation	Present	6	10	54
	Absent	48	72	14
	No observation	46	18	30

TABLE 12

Difference-of-Proportion Tests for Flake Attribute Analysis

Variable	Fifty/ Crane Point	Fifty/ Brennan	Crane Point / Brennan
Flake type			
Complete	5.20	4.86	2.13
Proximal	4.38	0.50	4.58
Medial	1.85	4.09	1.65
Distal	0.32	1.75	1.01
Cortex			
Present/ Absent	2.86	0.00	4.03
Size			
< 2 cm	4.43	0.82	5.33
2-5 cm	4.95	0.58	5.76
> 5 cm	1.61	0.63	1.34
Platform shape			
Triangular	4.33	2.37	2.78
Flat	2.98	4.21	0.37
Round	2.38	3.39	0.16
Remnant biface edge			
Present/ Absent	3.48	0.25	4.66
Platform preparation			
Present	6.11	1.07	8.45
Absent	6.11	4.03	4.31

*Significant difference (= 0.05) = 1.96

TABLE 13

Difference-of-Means Tests for Flake Attribute Analysis

Attribute	Fifty/ Brennan	Crane Point / Brennan
Scar number	3.36	16.67
Test statistic	(p < .0027)	(p <.000001)
Scar direction	10.03	5.18
Test statistic	(p < .000001)	(p < .000001)

Comparisons of flake attributes among the three sites shows that differences exist (Table 11). To assess the statistical significance of the differences, a difference-of-proportion test (Parsons 1974:445-448) was applied to the percentage data, and a difference-of-means test (Parsons 1974:441-445) was applied to the data where means and standard deviations were available. Table 12 shows the results of the difference-of-proportion test between the Fifty and Crane Point Sites and the Brennan Site, and Table 13 shows the results of difference-of-means tests. A more detailed explanation of the methods used to analyze the debitage attributes is contained in Appendix I.

When flake types are considered, the percentages listed for complete flakes are significantly different among all three sites. The prevalence of complete flakes in the core-derived assemblage from the Fifty Site is consistent with earlier studies (Magne 1981; Gunn and Mahula 1977) which suggest that the emphasis on the flake as a product of core reduction, without the need to be concerned with biface reduction, produces fewer broken flakes. The percentage of complete flakes in the Brennan sample is significantly different from both of the other samples and indicates that a notable proportion of the flakes were core-derived while the majority resulted from the reduction of bifaces.

The proportion of cortex on the Brennan sample is similar to the Fifty Site sample, indicating that the Brennan flakes were derived from a primary lithic source, and that secondary sources played no significant role at the Brennan Site. In terms of size, the Brennan sample is again similar to the Fifty Site sample showing a large percentage of small flakes, as well as a significant percentage of medium size flakes.

When striking platform shape is considered, the Brennan sample is more similar to the Crane Point sample, although there is a significant difference between the two samples for triangular shaped platforms. Triangular shaped platforms are associated with biface reduction (Appendix I). Percentages for the presence of remnant biface edge and platform preparation, which are associated with biface reduction, are quite low in the Brennan sample and are similar to those in the Fifty Site sample.

A difference-of-means test was conducted by Lowery and Custer (1990) on the sample flakes from the Fifty Site and the Crane Point Site. Results of the test showed that flakes from the Fifty Site have significantly fewer flake scars on their dorsal surfaces than those from Crane Point. Similarly, the flake scars on the dorsal surfaces of the flakes in the Fifty sample come from significantly fewer directions compared to the Crane Point sample. Therefore, scar complexity is more strongly indicative of biface reduction, while scar simplicity is more strongly indicative of core reduction. When difference-of-means were compared among the sites for flake scar attributes, the results indicated that there is a significant difference between both the Fifty and Crane Point Site samples and the Brennan sample. The results suggest that the biface reduction taking place at the Brennan Site was largely limited to the early stages of reduction which would not produce the degree of flake complexity resulting from later stages of biface reduction.

The results of the flake attribute comparisons indicate that the Brennan Site is generally more similar to the Fifty Site than the Crane Point Site. These findings are consistent with the Brennan Site's identification with quarry related activities of the Delaware Chalcedony Complex. However, the significantly lower percentage of complete flakes at the Brennan Site indicates that biface production played an important role in the organization of lithic technology at the site. This interpretation is further supported by the relatively high incidence of triangular shaped platforms on the debitage from the Brennan Site, which is known to be associated with biface technology. Therefore, the data indicates that the Brennan Site occupants were primarily relying on Delaware Chalcedony Complex cores for their lithic needs, but were nevertheless also

FIGURE 29

Woodland I Settlement Model

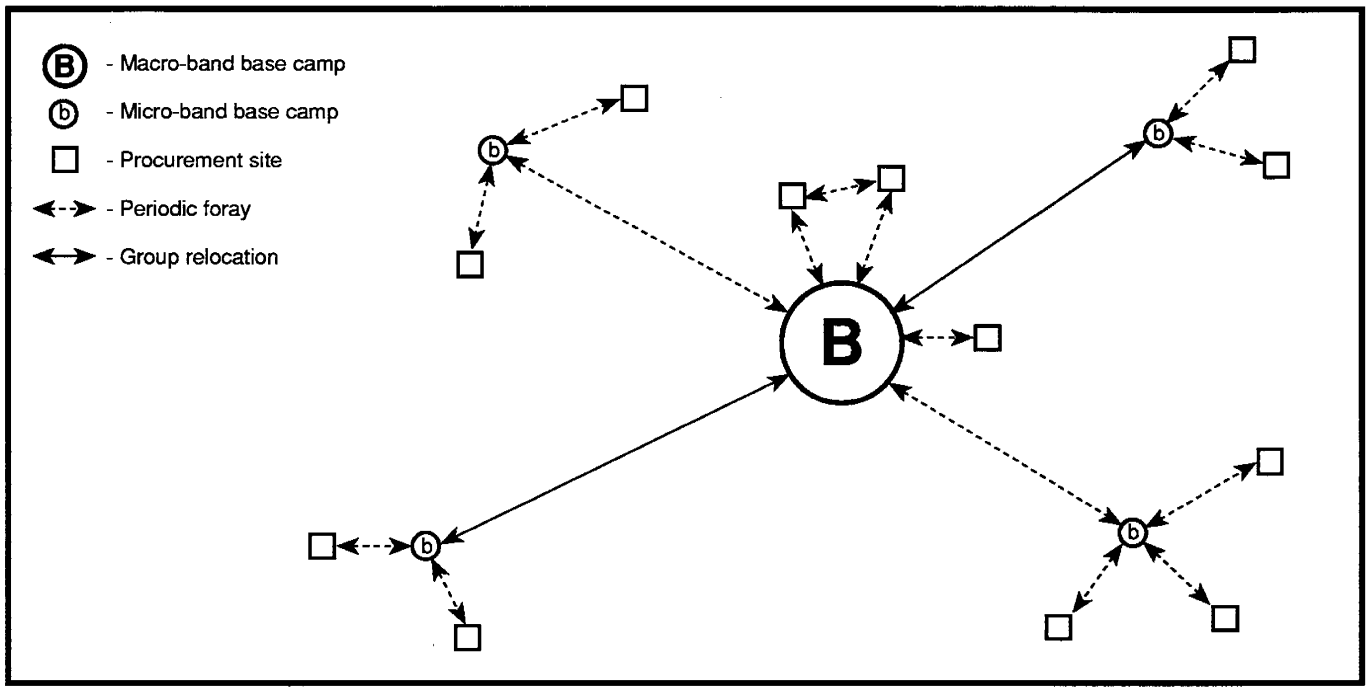

continuing to rely, to some extent, on transportable bifaces. The patterns of lithic resource use reflect the mobile life style of the Woodland I Period on the Delmarva Peninsula (Custer 1984, 1986, 1987, 1989; Custer and Bachman 1986).

Regional Settlement Patterns

During the Woodland I Period on the Delmarva Peninsula Sites with reliable access to fresh water, such as on floodplains and near swamps/marshes, were preferred (Custer 1989:188). The number of macro-band base camps decreased relative to earlier periods although the size of base camps generally increased. The number of micro-band base camps increased and such camps were located close to special resource settings, such as rock outcrops and rich hunting and gathering locales. Procurement sites during the Woodland I Period were located in reference to these special resource settings (Custer 1986:106). Archaeological evidence from sites in northern Delaware (Thomas 1977, 1981; Custer 1982; Custer, Watson, and DeSantis 1986) indicate that settlement patterns in the Woodland I Period (Figure 29) were semi-sedentary and consisted of seasonal occupations of base camps with transient exploitation of nearby resource-rich locales (Custer 1984, 1986, 1989; Custer and Bachman 1984).

Several prehistoric sites are known from both uncontrolled and controlled surface collections and archaeological testing in the general area surrounding the Brennan Site (Figure 30). The data from most of the sites is insufficient to firmly assign functional classifications, although diagnostic artifacts collected from the sites indicate that many of them can be temporally

FIGURE 30

Locations of Other Prehistoric Sites in the Vicinity of the Brennan Site

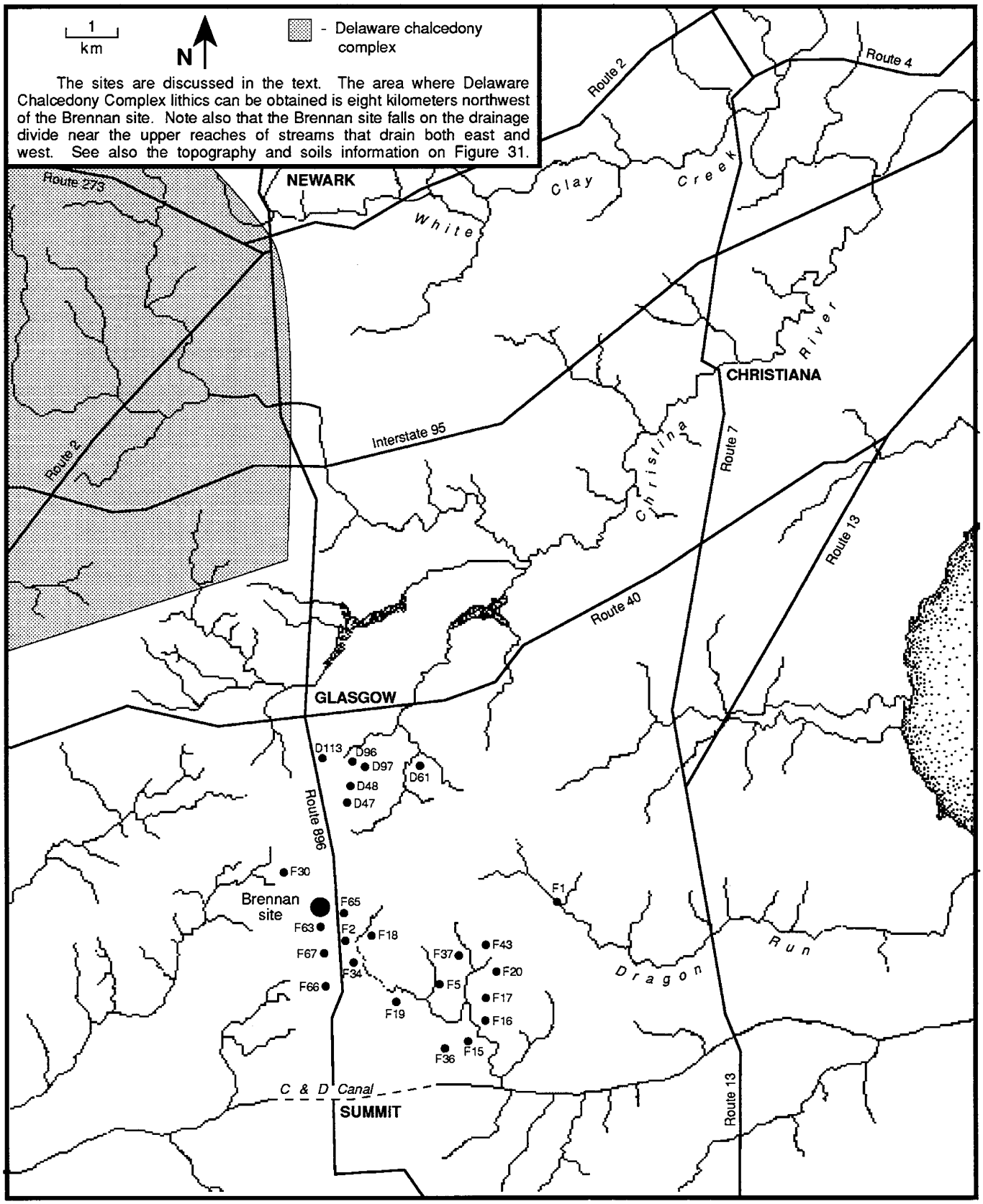

FIGURE 31

Location of the Brennan Site in Relation to Regional Landscape Features

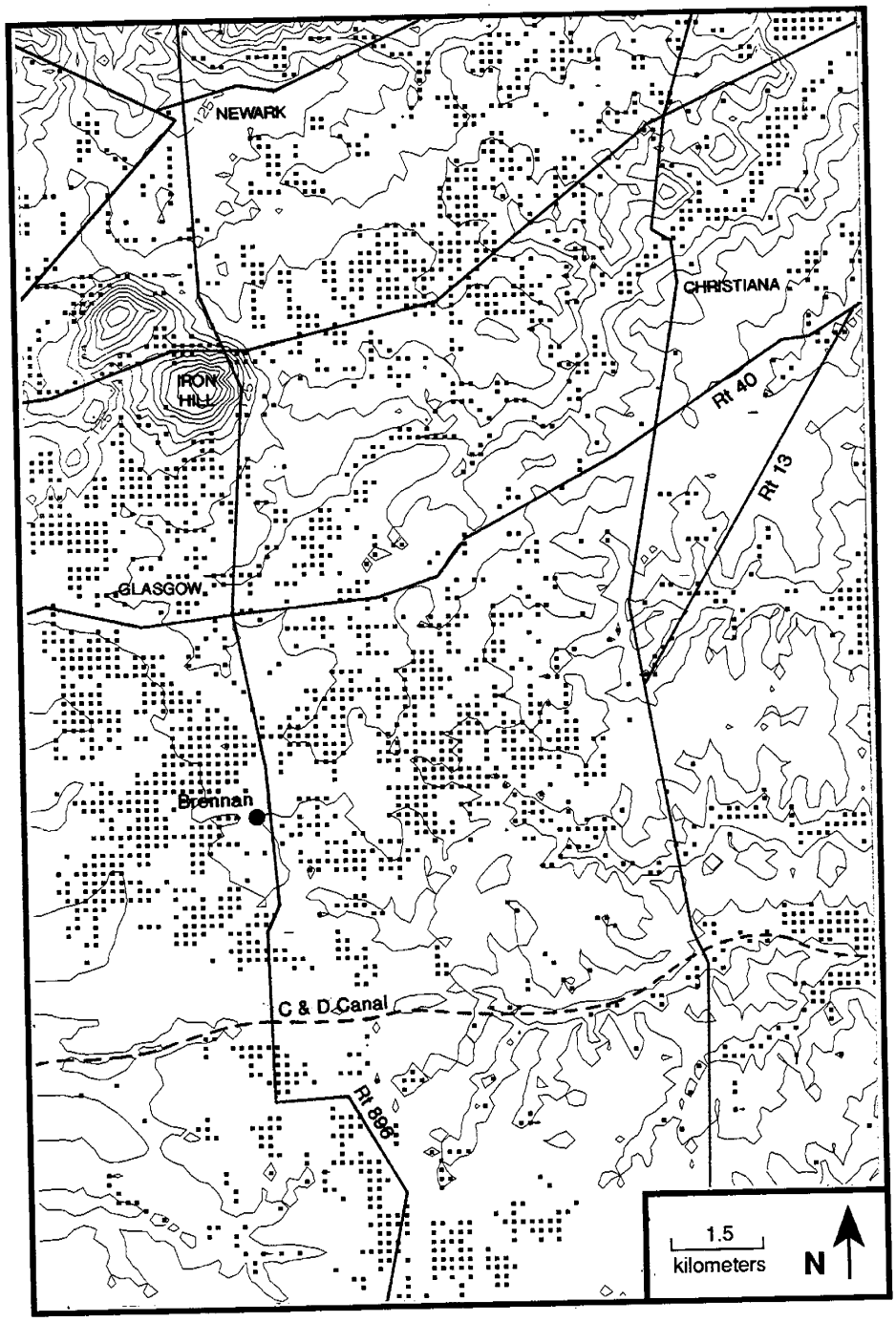

The small squares indicate areas dominated by poorly-drained soils. Note that the Brennan site falls in a relatively dry area between large areas dominated by poorly-drained soils. Iron Hill northwest of the Brennan site is a source of Delaware Chalcedony Complex lithics. Contours are 25 feet. Based on data obtained from the New Castle County Department of Water Resources.

classified as Woodland I. The assemblages from two sites (7NC-F-2, 7NC-F-5) located relatively close to the Brennan Site and one site farther east (7NC-F-1) indicate the possibility that the sites may have been base camps. All were occupied during the Woodland I Period. Assemblages from other known sites in the area dating to the Woodland I Period (7NC-F-63, F-67, F-2, F-18, F-15, F-16, F-17, F-19, F-20, F-36, F-37) appear to indicate procurement functions.

The Brennan Site is situated in the Drainage Divide Zone of the High Coastal Plain on a well-drained slope in between poorly-drained terrain surrounding drainages to the northwest and southwest (Figure 31). The site is within 8 km of the lithic outcrops of the Delaware Chalcedony Complex at Iron and Chestnut hills. The site setting would have been appealing for procurement activities. Indeed, it appears from the presence of broken projectile points and numerous utilized flakes in the Brennan Site assemblage that some hunting and processing activities did take place at or near the site in addition to the reduction of primary jasper cores and bifaces. The reason, then, for the unusually distant location of the quarry reduction site may be that the occupants intended to engage in hunting activities, in addition to quarry activities, and proceeded to a known procurement locale closer to their base camp. The Brennan Site is one of the nearest locations south of Iron and Chestnut hills that provides the moist conditions necessary to attract game and to offer resources for gathering. The numbers of procurement sites in the general area testifies to the area's appeal.

Furthermore, the Brennan Site is located on a discontinuous ridge of well-drained soils that runs along the drainage divide of the Delmarva Peninsula in northern Delaware (Figure 30 and 31). The ridge may have served as a natural transportation route that avoids the mosaic of poorly-drained soils to the east and west of the ridge. Thus, the Brennan Site falls along a natural transportation corridor leading from the base of Iron Hill between the upper reaches of drainages that form Lums Pond and the St. Georges River on the east and Back Creek flowing into Chesapeake Bay on the west. The Chesapeake and Delaware Canal cuts through the ridge at Summit connecting the two drainage systems. Present Route 896 follows the ridge and has been a major transportation route north/south on the northern Delmarva Peninsula for almost 300 years. The people who used the Brennan Site probably camped for a short after visiting the quarries of the Delaware Chalcedony Complex at Iron and Chestnut hills where they procured raw materials with which to replenish their tool kits. At the Brennan Site they reduced the stone material some before continuing on their way to a base camp further south. The poorly-drained areas on either side of the ridge afforded good localities for hunting and gathering and it is evident the Brennan Site occupants engaged in some subsistence activities.

In conclusion, the excavations at the Brennan Site recovered significant information on the organization of lithic technologies outside of the immediate vicinity of the Delaware Chalcedony Complex quarries and on settlement patterns in Delaware's High Coastal Plain during the Woodland I Period. Further research at other sites in the local area may help to better define group territories, wandering ranges, and transportation routes.