


DELDOT BRIDGE DESIGN SECTION

Delaware Department of Transportation

BRIDGE DESIGN MANUAL

2016 EDITION






This page intentionally left blank.

Delaware Department of Transportation

BRIDGE DESIGN MANUAL

2016 EDITION

Adopted as policy for all DelDOT Projects as of October 1, 2016

Recommended By:

Bridge Design Engineer

Recommended By:

State Bridge Engineer

Approved By:

Chief Engineer

Approved By:

Cabinet Secretary

Approved For Use on All Federal Aid Projects By:

Division Administrator, Federal Highway Administration

This page intentionally left blank.

Table of Contents

List of Tables

List of Figures

Abbreviations and Acronyms

°C	degrees Celsius
°F	degrees Fahrenheit
1-D	one dimensional
2-D	two-dimensional
3-D	three-dimensional
AADT	annual average daily traffic
AASHTO	American Association of State Highway and Transportation Officials
ABC	Accelerated Bridge Construction
ADA	Americans with Disabilities Act
ADD	Addendum
ADT	average daily traffic
ADTT	average daily truck traffic
AHP	Analytic Hierarchy Process
APD	accelerated project delivery
AREMA	American Railway Engineering and Maintenance-of-Way Association *(but this manual uses the acronym to refer to the AREMA Manual for Railway Engineering)*
ASCE	American Society of Civil Engineers
ASR	alkali-silica reaction
ATON	aids to navigation
AWS	American Welding Society
BFE	Base Flood Elevation
BMS	Bridge Management System

BOEF	Beam on elastic foundation
CADD	computer-aided design and drafting
CAPWAP	Case Pile Wave Analysis Program
CCA	chromate copper arsenate
CCNS	closed cell neoprene sponge
CE	carbon equivalent
CFA	continuous flight auger
CFR	Code of Federal Regulations
CFRP	carbon fiber reinforced polymer
CJP	complete joint penetration
CLOMR	conditional letter of map revision
CMS	Changeable Message Signs
CPT	Cone Penetrometer Tests
CSE	copper-sulfate half-cell electrode
CTP	Capital Transportation Program
DCDPF	*Design and Construction of Driven Pile Foundations*
DEF	delayed ettringite formation
DelDOT	Delaware Department of Transportation
DEM	Digital Elevation Model
DGM	Design Guidance Memorandum
DHV	Design Hourly Volume
DMS	Dynamic Message Sign
DMT	Dilatometer Test
DNREC	Department of Natural Resources and Environmental Control
DRBA	Delaware River and Bay Authority
DRC	Design Resource Center

EAP	Emergency Action Plan
EM	Electromagnetics
EOR	Engineer of Record
EPS	expanded polystyrene
ERDC	Engineer Research and Development Center
ESRI	Environmental Systems Research Institute, Inc.
FCM	fracture critical member
FEMA	Federal Emergency Management Agency
FHWA	Federal Highway Administration
FIS	Flood Insurance Study
ft	feet
FTP	File Transfer Protocol
GeoHMS	Geospatial Hydrologic Modeling Extension
GIS	geographic information system
GPR	Ground Penetrating Radar
GRS/IBS	Geosynthetic Reinforced Soil / Integrated Bridge System
GUI	graphical user's interface
H:V	Horizontal:Vertical
HDPE	high density polyethylene
HEC	Hydraulic Engineering Circular *or* Hydrologic Engineering Center
HEC-HMS	Hydrologic Engineering Center Hydrologic Modeling System (U.S. Army Corps of Engineers)
HEC-RAS	Hydrologic Engineering Center River Analysis System (U.S. Army Corps of Engineers)
HEC-SSP	Hydrologic Engineering Center Statistical Software Package
HFAWG	Hydrologic Frequency Analysis Work Group
H&H	hydrologic and hydraulic

HLMR	high-load multi-rotational
HMA	hot-mix asphalt
HMWM	high molecular weight metharylate
HPS	high-performance steel
HW	headwater
IGM	Intermediate Geomaterial
IR	Infrared
LCCA	life-cycle cost analysis
LiDAR	light detection and ranging (remote sensing method)
LMC	latex modified concrete
LOC	limits of construction
LOMR	Letter of Map Revision
LRFD	load and resistance factor design
LRFR	Load and Resistance Factor Rating
LTEC	least total expected cost
M&R	Material and Research
MAP-21	Moving Ahead for Progress in the 21st Century Act
MASH	Manual for Assessing Safety Hardware
MASW	Multi-channel Analysis of Surface Waves
MBE	Manual for Bridge Evaluation
MCFT	Modified Compression Field Theory
MHW	mean high water
MLW	mean low water
MOT	maintenance of traffic
MR&R	maintenance, repair, and rehabilitation
MSE	mechanically stabilized earth

NAVD 88	North American Vertical Datum of 1988
NBI	National Bridge Inventory
NBIS	National Bridge Inspection Standards
NCHRP	National Cooperative Highway Research Program
NCSPA	National Corrugated Steel Pipe Association
NEPCOAT	Northeast Protective Coating Committee
NFIP	National Flood Insurance Program
NHD	National Hydrography Dataset
NHS	National Highway System
NLF	No-load fit
NOAA	National Oceanic and Atmospheric Administration
NRCS	Natural Resources Conservation Service (formerly SCS)
NSBA	National Steel Bridge Alliance
PBES	prefabricated bridge elements and systems
PCEF	Prestressed Concrete Committee for Economic Fabrication
PCI	Precast/Prestressed Concrete Institute
PCINE	Precast/Prestressed Concrete Institute Northeast
PDA	Pile Driving Analyzer
PDF	Adobe Acrobat Portable Document File
PDM	DelDOT *Project Development Manual* (2015)
PEP	plain elastomeric bearing pad
PoDI	Projects of Division Interest
PMF	Probable Maximum Flood
PMT	Pressuremeter Test
PQR	Procedure Qualification Records
PS&E	plans, specifications, and estimate

PTFE	Polytetrafluoroethylene
QA/QC	quality assurance / quality control
RCRF	Reinforced Concrete Rigid Frames
RFI	request for information
RH	rehabilitate
RMR	Rock Mass Rating
RP	replace
RQD	Rock Quality Designation
S&O	Stewardship and Oversight
SASW	Spectral Analysis of Surface Waves
SCC	self-consolidating concrete
SCL	structural composite lumber
SCS	Soil Conservation Service
SDF	Spillway Design Flood
SDI	slake durability index
SDLF	steel dead load fit
SDR	structure data records
SHV	Specialized Hauling Vehicles
SIP	Stay-in-Place
SMS	(Aquaveo) Surface-Water Modeling System
SPMT	self-propelled modular transporters
SPT	Standard Penetration Tests
SRICOS-EFA	Scour Rate in Cohesive Soil – Erosion Function Apparatus
SRM	System Redundant Member
STU	Shock Transmission Unit
TDLF	total dead load fit

TIN	triangulated irregular network
TRB	Transportation Research Board
TS&L	type, size, and location
UDC	Unified Development Code (New Castle County)
UH	unit hydrograph
UHPC	ultra-high performance concrete
UIT	Ultrasonic Impact Treatment
USACE	U.S. Army Corps of Engineers
USBR	U.S. Bureau of Reclamation
U.S.C.	United States Code
USGS	U.S. Geological Survey
USGS SIR	USGS Scientific Investigations Report
VMS	Variable Message Signs
VST	Vane Shear Test
WDM	Watershed Data Management
WMS	Watershed Modeling System
WPS	Welding Procedure Specifications
WSE	water surface elevations
YS/TS	Yield strength/Tensile strength

Section 101
Introduction

101.1 Purpose

The Delaware Department of Transportation (DelDOT) has developed this *Bridge Design Manual* (this Manual) to provide guidance and assistance in the standard practice of design related to bridges and all structures on or over a public roadway in the State of Delaware. The *Manual* documents DelDOT policies and prescribes procedures for design. It is intended to be a technical manual, providing engineers and technicians guidance in:

1. Structure design practices specific to the State of Delaware;
2. Delaware preferences and interpretation of American Association of State Highway and Transportation Officials (AASHTO) specifications necessary to provide consistent structure designs; and
3. The minimum criteria and information necessary to produce documents for the fair procurement of construction services.

101.2 Limitations of the Design Manual

Although this Manual attempts to unify and clarify bridge and structure design policy performed by or for DelDOT, it does not preclude justifiable variances; variances are subject to the approval of the Bridge Design Engineer, provided the variances are based on sound engineering principles. Good design practice will always require a combination of basic engineering principles, experience, and judgment to produce the best possible structure, within reasonable economic limitations, to suit an individual site. The policies in this Manual have been established primarily for application to typical highway structures using conventional construction methods with additional applications, such as Accelerated Bridge Construction (ABC). These policies are subject to re-examination and may not be applicable to long-span, complex-curved, or high-clearance structures, such as major river crossings or multi-level interchange structures.

101.3 Policy

The *AASHTO LRFD Bridge Design Specifications* (AASHTO LRFD; 2014, 7th Edition) is the basis for highway bridges designed for DelDOT. Users of this Manual should be completely familiar with the AASHTO LRFD.

101.4 Applicable Design Specifications and Standards

101.4.1 Design Specification Reference Nomenclature

All references to AASHTO LRFD sections, articles, equations, figures or tables carry the prefix A.

References to AASHTO commentary carry the prefix AC.

References to the sections within this Manual carry no prefix.

References to commentary to sections within this Manual carry the prefix C.

101.4.2 Design Specifications

The following specifications, unless otherwise modified or amended in this Manual, shall govern the design of highway structures:

1. *AASHTO LRFD Bridge Design Specifications*, 2014, 7th Edition, including 2015 and 2016 interims
2. AASHTO/American Welding Society (AWS) D1.5M/D1.5:2015 – Bridge Welding Code, 7th Edition
3. AASHTO *Manual for Bridge Evaluation*, 2nd Edition including 2011, 2012, 2013, 2014, 2015, and 2016 interim revisions
4. AASHTO *LRFD Specifications for Structural Supports for Highway Signs, Luminaires and Traffic Signals*, 1st Edition, 2015

101.4.3 AASHTO Interim Specifications and New Editions

As AASHTO interim specifications and new editions are published, DelDOT will review the interims and incorporate them into this Manual as appropriate.

101.4.4 Deviations from Specifications

Any deviations from the specifications and standards listed above, or the Department's design criteria described hereafter, require the Bridge Design Engineer's approval. The approved design criteria shall be shown on the bridge plans. Refer to *Section 102.5.4 – Design Exceptions and Design Variances* for additional discussion on obtaining a design variance.

101.4.5 Order of Precedence

The design criteria given in this Manual supersedes any criteria given in the referenced design specifications in *Section 101.4.2 – Design Specifications*. In case of conflict or where clear precedence cannot be established, the Bridge Design Engineer shall establish governing specifications.

For this Manual and AASHTO LRFD, the final interpretation shall be made by the Bridge Design Engineer.

101.4.6 Modifications to the Design Manual

Updates and Revisions to the *Manual* will be released on an annual basis at the beginning of the FHWA's fiscal year (October 1ST). The revised text will be marked with a single vertical line in the right hand margin of the page. All revisions will be compiled in a spreadsheet located on the Design Resource Center (DRC).

Based on the urgency of an update or revision, the Department may issue a "Design Guidance Memorandum," which provides technical guidance on a specific issue during an interim period. Direction included in these memos will then be incorporated into the annual update of the *Manual*.

101.4.7 Additional Reference Manuals and Documents

The following references contain material that is relevant to bridge project development and design. These documents contain certain provisions that pertain to a particular type of bridge or part of the bridge project process. Bridge designers should consider these documents where applicable.

DelDOT references, along with additional materials pertinent to project development, can be found on the DRC portion of DelDOT's website and are referred to as follows in this Manual:

1. DelDOT *Project Development Manual* (PDM) – July 2015
2. DelDOT *Road Design Manual* – January 2004 with Interim Revisions
3. DelDOT *Quality Assurance/Quality Control Plan* – January 2009
4. DelDOT *CADD Standards Manual* – May 2010
5. DelDOT *Standard Specifications for Road and Bridge Construction* (Standard Specifications) – August 2016
6. DelDOT *Standard Construction Details*

101.5 Terms

Design exception – a request to deviate from the Department's governing criteria and AASHTO's new construction criteria for the 13 Controlling Design Elements as may be warranted by special or unique project conditions.

The 13 Controlling Design Elements are:

1. Design Speed
2. Through lane and auxiliary lane widths
3. Shoulder widths
4. Stopping sight distance on vertical and horizontal curves
5. Horizontal alignment (radius of curves)
6. Vertical Alignment

7. Minimum and maximum grades
8. Cross slopes
9. Superelevation rate
10. Horizontal clearance
11. Vertical clearance
12. Bridge width
13. Structural capacity

Additional information related to design exceptions and the justification of design exceptions is found in the *Road Design Manual*, Chapter 3.1.3, Departure From Standards.

Design Resource Center (DRC) – the DRC is a page on DelDOT's website that contains a variety of data related to the development of transportation projects in the State. The DRC can be located at: http://www.deldot.gov/information/business/drc/index.shtml.

Design Variance – a request to deviate from the Department's governing standards while meeting AASHTO's new construction criteria for the 13 Controlling Design Elements as may be warranted by special or unique project conditions.

101.5.1 Bridge Types

The following bridge-related terms are used throughout the *Manual* to provide reference to the anticipated level of design oversight and/or submission standards associated with various structure types and complexities.

Bridge – In Delaware, a bridge is defined as a structure, including supports, erected over a depression or an obstruction, such as water, a road, or a railroad, for carrying traffic or other moving loads that has an opening exceeding 20 square feet. Bridges with a clear span greater than 20 feet are included on the National Bridge Inventory (NBI).

Major bridges – Major bridges are defined as bridges with an estimated construction cost of $40 million or more. This criterion also applies to individual units of separated or dual bridges.

Complex bridges – Complex bridges are curved girder bridges, moveable bridges, stayed girder bridges, segmental bridges, and any structure having a clear unsupported length in excess of 350 feet, or bridges classified as complex by the Bridge Design Engineer on the basis of type, size, and location (TS&L) or conceptual review. Complex bridges also include those with difficult or unusual foundation problems, new or complex designs involving unusual structures or operational features, or bridges for which the design standards or criteria may not be applicable. Use of new products and experimental or demonstration projects are also considered as unusual structures.

101.5.2 Roadway Types

101.5.2.1 *Functional Classification*

Delaware has adopted a system of classifying and grouping highways, roads, and streets as to their purpose and the character of service they provide in accordance with the Federal Highway Administration's (FHWA's) *Traffic Monitoring Guide* (2013). To determine certain bridge design elements, knowing and understanding the functional classification of the roadway facility supported is essential. The standard functional classifications recognized by DelDOT are indicated below. Additional information related to functional classification can be found in the PDM and the *Road Design Manual*. DelDOT maintains maps identifying the functional classification of all Delaware roads. These maps can be found on the *DRC – Highway Design Tab*.

1. Rural System
    a. Principal Arterial – Interstate
    b. Principal Arterial – Other
    c. Minor Arterial
    d. Major Collector
    e. Minor Collector
    f. Local
2. Urban System
    a. Interstate
    b. Freeways and Expressways
    c. Principal Arterial
    d. Minor Arterial
    e. Major Collector
    f. Local

101.5.2.2 *National Highway System*

A prominent feature of the statewide planning process is maintaining the integrity of the National Highway System (NHS). Intermodal Surface Transportation Efficiency Act Section 1006 created the NHS as required by the National Highway System Designation Act of 1995. This directive was further defined and expanded by the Moving Ahead for Progress in the 21st Century Act (or MAP-21) legislation of July 6, 2012.

The purpose of the NHS is to provide an interconnected system of principal arterials that serve major population centers, internal border crossings, ports, airports, public facilities, and other intermodal transportation facilities and major travel destinations; meet national defense requirements; and serve interstate and interregional travel. To determine certain

bridge geometry and submission requirements, knowing whether the structure is located on an NHS-designated roadway. Additional information related to the NHS can be found in the PDM and the *Road Design Manual*. A map of all NHS roadways in the State of Delaware can be obtained on the *DRC – Highway Design Tab*.

101.5.3 Project Types

New Construction and Reconstruction Projects – Projects in this category include the construction of new bridges and/or complete bridge replacement.

Intermediate Projects – Intermediate project types consist of bridge rehabilitation projects and/or bridge superstructure replacement projects.

Preventative Maintenance – Preventative maintenance projects include rehabilitation or restoration of specific elements of a bridge when such activities are a cost-effective means of extending bridge service life. The majority of the work for these projects is usually maintained between the existing curb lines or outer edges of the shoulders. Preventive maintenance activities include, but are not limited to, bridge painting, deck rehabilitation, joint replacement or repair, bearing replacement, installation of pile jackets, placement of scour countermeasures, and seismic retrofit.

101.6 FHWA Stewardship and Oversight Agreement

The intent and purpose of the Stewardship and Oversight (S&O) Agreement is to document the roles and responsibilities of the FHWA's Delaware Division Office and DelDOT with respect to project approvals and related responsibilities, and to document the methods of oversight that will be used to efficiently and effectively deliver the Federal Aid Highway Program.

DelDOT may assume FHWA's Title 23 responsibilities for design; plans, specifications, and estimate (PS&E); contract awards; and inspections, with respect to Federal-aid projects on the NHS if both DelDOT and FHWA determine that assumption of responsibilities is appropriate.

FHWA may, in its discretion and on a case-by-case basis, retain any specific approval or related activity for any project located on the NHS. Those projects for which FHWA retains certain project-specific actions or related responsibilities will be identified as Projects of Division Interest (PoDIs). Project approvals and related activities retained by FHWA will be identified in individual project oversight plans. FHWA, in coordination with DelDOT, will use a risk-based approach to determine which NHS projects are considered PoDI and which project areas warrant FHWA approval or oversight. An updated PoDI list will be maintained in a manner that is easily accessible and readily available to both FHWA and DelDOT project staff. Criteria for identifying PoDI projects are further outlined in Section IX of the S&O Agreement.

DelDOT may assume FHWA's Title 23 responsibilities for design, PS&Es, contract awards, and inspections, with respect to Federal-aid projects off the NHS (non-NHS) unless DelDOT determines that assumption of responsibilities is not appropriate (Title 23 the United States Code [U.S.C.] 106(c)(2)). Project approvals and related activities for which DelDOT has assumed responsibilities are outlined in Attachment A of the S&O Agreement.

DelDOT assumption of responsibilities under 23 U.S.C. 106(c) covers six areas: design; PS&E; contract awards; and inspections, which are defined more specifically in Section VI of the S&O Agreement.

Any approval or related responsibility not listed in Attachment A cannot be assumed by the State without prior concurrence by FHWA. A list of the most frequently occurring approvals and related responsibilities that may not be assumed by DelDOT are listed in Section VII of the S&O Agreement.

For projects that have FHWA oversight, Section XI outlines the criteria that FHWA must follow. For DelDOT administered projects, DelDOT is responsible for demonstrating to FHWA how it is carrying out its responsibilities in accordance with the S&O Agreement. DelDOT oversight and reporting requirements are outlined in Section XII of the S&O Agreement.

All Federal-aid projects on the NHS should be reviewed with the Bridge Design Engineer at initiation to determine the level of FHWA involvement.

101.7 Computer Software

A list of commercially available software that is currently used by the Department is located on the *DRC – Bridges and Structures Tab*. Use of commercially available or consultant-developed software that is not included on that list must be specifically approved by the Bridge Design Engineer prior to use. The Department has the discretion to either accept or reject the use of any commercially available or consultant-developed software proposed for use on any project. In any and all cases, the designer is responsible for the accuracy of any and all computer software programs utilized on a project.

101.8 Feedback

Users of this Manual should direct any questions, comments, or recommendation for modifications to the content of the *Manual* directly to the Bridge Design Engineer, DelDOT.

101.9 References

AASHTO, 2011 *Manual for Bridge Evaluation*, 2nd Edition with 2012, 2013 2014 and 2015 Interim Revisions.

AASHTO, 2015. *AASHTO LRFD Specifications for Structural Supports for Highway Signs, Luminaires and Traffic Signals*, 1st Edition.

AASHTO, 2014. *AASHTO LRFD Bridge Design Specifications*, 7th Edition.

DelDOT, n.d. *Standard Construction Details*.

DelDOT, 2015. *Standard Specifications for Road and Bridge Construction,* December.

DelDOT, 2009. Q*uality Assurance/Quality Control Plan*, January.

DelDOT, 2010. *CADD Standards Manual,* May.

DelDOT, 2015. *Project Development Manual*, July.

DelDOT, 2004. *Road Design Manual,* January.

FHWA, 2013. *Traffic Monitoring Guide*, Office of Highway Policy Information, September.

INTENTIONALLY LEFT BLANK

Section 102
Bridge Design Submission Requirements

102.1 Plan Presentation

102.1.1 Drafting Standards

Standard line widths, lettering sizes, fonts, and symbols have been established to promote uniformity in the preparation of bridge design plans. Refer to the *CADD Standards Manual* (2010) for Department drafting standards. Model plans are located on the *DRC – Model Plans Tab* and demonstrate proper application of the Department's drafting standards and plan presentation.

Drawings must be concise and without repetitious notes, dimensions, and details. Plans, sections, elevations, and details must be drawn accurately to scale. Scales must be large enough to show clearly all dimensions and details necessary for construction of the structure. Preferably, plans, sections and elevations should be drawn to a scale not less than ¼"= 1'-0" and details to a scale not less than 3/8"= 1'-0".

A north arrow symbol should be placed on all plan views.

When describing directions or locations of various elements of a highway project, the construction baseline and stationing should be used as a basis for these directions and locations. Elements are located either left or right of the construction baseline and near and far with respect to station progression (e.g., near abutment, left side, right railing, left far corner).

Elevation views of piers and the far abutment should be shown looking forward along the stationing of the project. The near abutment should be viewed in the reverse direction. Near and far abutments should be detailed on separate plan sheets for staged construction projects or for other geometric conditions that produce asymmetry between abutments.

For each substructure unit, the skew angle should be shown with respect to the construction baseline or, for curved structures, to a reference chord. See *Section 103 – Bridge Geometry and Structure Type Selection* for the definition of bridge skew.

In placing dimensions on the drawings, sufficient overall dimensions must be provided so it is not necessary for a person reading the drawings to add up dimensions in order to determine the length, width, or height of an abutment, pier, or other element of a structure.

In general, the designer should avoid showing a detail or dimension in more than one place on the plans. Duplication is usually unnecessary and always increases the risk of errors, particularly when revisions are made.

If a view or a section must be placed on another sheet, both sheets should be clearly cross-referenced.

When misrepresentation is possible, the limits of pay items must be clearly indicated on the corresponding details of a structure.

Abbreviation of words should generally be avoided. Abbreviations, unless they are common use, may cause uncertainty in interpreting the drawings. If abbreviations are used, they should be defined on the legend sheet.

102.1.2 Plan Sheet Sequence

Bridge project plans shall be assembled in the following order:

- Title sheet and index of sheets
- Legend sheet
- General notes and project notes
- Roadway detail sheets
- Typical sections
- Plan and profile sheets
- Bridge sheets
- Environmental compliance sheets
- Erosion control plan sheets
- Utility sheets (if applicable)
- Traffic control plan sheets
- Traffic sheets
- Right-of-way sheets (if applicable)
- Quantity sheets (as required)

Quantity sheets must provide a separate quantity summary for each bridge as well as a total project quantity summary. Quantity sheets are only used when a bridge or bridges are incorporated into a road project. When bridges are part of a road project, a separate quantity summary for each bridge, as well as a total project summary, is required.

Bridge sheets are assembled in the order of construction as follows:

- Bridge notes, including bridge quantities and index of bridge sheets
- Bridge plan, section, and elevation (including key plan where applicable)
- Lay-out plan
- Foundation layout
- Pile details
- Abutment details
- Pier details
- Bearing details
- Framing details
- Beam details
- Diaphragm details
- Camber details

- Moment and shear diagrams (required for complex bridges or as directed by the Bridge Design Engineer)
- Deck and bridge railing details
- Finished deck elevations
- Expansion joint details
- Approach slab details
- Miscellaneous details
- Reinforcing bar list
- Soil borings

Sheets may be combined on smaller projects to reduce the number of sheets.

102.1.3 Bridge Sheet Preparation

In preparing bridge plans, the designer should fully implement the plan development checklists, which are available on the *DRC – Bridges and Structures Tab and Project Management Tab*. Bridge sheets should generally be arranged in the order the bridge will be constructed.

The number of bridge sheets will vary with the size and complexity of the structure. At a minimum, the bridge sheets must show:

- A general plan view and elevation view
- Typical bridge sections
- Substructure details
- Superstructure details
- Bearing details
- Railing and parapet details
- Reinforcement and reinforcement schedules
- Borings

A separate sheet is typically used for each abutment and pier. Where piles are used, a pile layout should be provided for each substructure unit.

In addition, as appropriate, the bridge sheets should show the following:

- Deck details including grades
- Joint details
- Camber diagrams
- Deck placement sequence
- One feasible bridge erection scheme (as applicable for major and/or complex structures)
- Other details necessary for constructing the bridge

General instructions for completing specific bridge sheets are presented below.

102.1.3.1 *General and Project Notes*

General notes include items that are applicable to all projects. Standard general notes and legend sheets are available on the *DRC – CADD Tab*. The most recent versions of these sheets shall be used on all projects. General notes include such items as:

- Design specifications
- Standard construction specifications
- Erosion control site reviewer requirements
- American Traffic Safety Services Association certification requirements
- Other notes not addressed by the Standard Specifications

Project notes include items that are specific or unique to the project. Bridge project notes include:

- Index of bridge sheets, including sheet titles and numbers
- Design criteria
- Vertical and horizontal datum
- Hydraulic and scour data (including information as noted in *Section 104 – Hydrology and Hydraulics*) for structures draining an area of ½ square miles or greater
- Design loading (e.g., special dead loads specific to the bridge, metal deck form dead loads, future wearing surface dead loads)
- Live load distribution method
- Structural steel specification and grade
- Welding specification and information
- Painting and protective coatings specification and direction
- Portland cement concrete class and/or strength
- Reinforcing steel specification and grade
- Prestressing steel specification and grade
- Foundation information
- Removal items
- Utilities
- Traffic control references
- Other specific project-related notes

102.1.3.2 *Bridge Plan and Elevation*

The bridge plan and elevation sheet generally serve as a record document, which contains critical information regarding the structure and project site and is referenced throughout the life of the structure. The following essential information shall be shown on the bridge plan and elevation sheet. If all of the following items cannot be accommodated on the bridge plan and elevation sheet, they may be shown on the next or succeeding sheets with proper reference.

1. Plan: Outlines of substructure above ground and superstructure; length of spans along profile grade of roadway, skew angle(s), stations, and grade elevations at intersections of profile grade with centerline bearing at abutment and centerline piers; designation of piers, abutments, and wingwalls (e.g., Pier 5, Near Abutment, Wingwall A); horizontal distance between profile grade lines in the case of dual structures; contours for existing

and final ground lines; location of points of minimum actual and required vertical clearances, scuppers, and lighting poles; minimum actual and required horizontal clearances between underpassing highways or centerline of railroad tracks and faces of adjacent parts of substructure; and normal horizontal clearances between faces of substructure for drainage structures.

2. Elevation: Rate and direction of roadway grade, spacing of railing posts, spacing and mounting heights of lighting poles, protective fence location, finished ground line and approximate original ground line along centerline of bridge, bottom of footing elevations, estimated pile tip elevations, and required and provided minimum vertical clearances together with the elevations that define the clearances provided. The type of joint and movement classification for each joint must be shown on the plans. The fixity at each substructure unit must be shown. For definition and requirements for highway vertical clearance, see *Section 103 – Bridge Geometry and Structure Type Selection*. For drainage structures, the minimum vertical clearance is the maximum unobstructed design flow depth under a bridge.

3. Typical Normal Section(s) of Superstructure: Roadway width between curbs or sidewalks, overall dimensions, out-to-out faces of barriers, shoulder width, cross slopes of roadway, minimum slab thickness, girder spacing, girder type, girder size, and overhang. All applicable cross sections shall be shown on the bridge plan and elevation sheet.

4. Grade Data: Horizontal and vertical alignment data, superelevation, run-in/run-out data, and points of rotation in accordance with the *Road Design Manual*.

102.1.3.3 *Lay-Out Plan*

A lay-out plan is essential to correctly convey the geometry of the bridge. The lay-out plan shall be prepared in accordance with the following direction.

1. A lay-out sketch shall be shown, preferably on the first or second sheet of the structure drawings. There should be ample open space outside of the sketch to allow wing and barrier line extensions for lay-out point recordings. The sketch need not be to scale. Frequently, exaggerations of curvature, angle, or other are necessary to show the information clearly.

2. The sketch shall be as simple as possible, but as complete as possible so that the structures will be constructed according to the plans.

3. All necessary tie-in dimensions between highway alignment, working points, lines of structure, and other control points shall be shown in feet to two decimal places on the sketch.

4. A table of coordinates for all working points, a table of coordinates for the baseline, and coordinates to four decimal points must be provided. The following note should be included: Four place coordinates are for computational purposes only and do not imply a precision beyond two decimal points.

5. The sketch shall show the baseline and the shape of the exterior face of the substructure (abutments and wingwalls). All corners shall be referenced by showing

working points and station/offset referenced to the baseline. Wingwall angles to the front face of abutments shall be referenced. Working point coordinates may be shown on the plan.

6. At intermediates piers, the skew angle between the centerline of the pier and the baseline is required. The location of the intersection of the pier centerline with the baseline shall be tied to other parts of the substructure by baseline dimensions. The distance from the baseline to the centerline of roadway along the centerline of the pier shall be provided. The station of the intersection points at the baseline shall be shown. Distances between the outside faces of each barrier shall be shown.

7. For multi-level structures, each level shall be sketched separately, but referenced to the same baseline.

8. The lay-outs sketch for box culverts shall include inside faces of walls, ends of the culvert, and the front face of the wingwalls. Reinforced concrete arch culverts, concrete rigid frames, and metal culverts shall be treated similarly.

102.1.3.4 *Other Plans*

The following shall be followed by the designer in the development of specific plan types that may be required:

1. Proprietary Retaining Walls: When proprietary retaining walls are included in a project, provisions must be included in the contract documents to guide the suppliers of the walls. The contract documents will illustrate the general lines and grades of the proposed retaining wall along with any dead, live and earth loading which the wall design must support as well as geotechnical properties of the fill material and foundation material. During construction, the contractor will submit, through the shop drawing review process, the completed drawings and calculations of the wall design for review by the designer.

2. Reinforcement Bar Schedules: A reinforcement bar schedule must be prepared whenever reinforcement is required on the project. The reinforcement bar schedule will be prepared in sufficient detail by the designer such that it can be directly utilized for construction without need for additional detailing efforts by the contractor. The preparation of the schedule shall utilize the Department's *Bridge Rebar Sheet Program* (BR-10-001, 2010), which is located on the *DRC – Bridges and Structures Tab*. Bar marks should not be repeated. For bar marks that cover varying lengths of bar, the minimum and maximum lengths of bar shall be denoted in the schedules, along with the varying distance per number of bars. For example: S601, 9'-0" to 12'-0", vary 2 EA. by 6".

3. Soil Boring Logs: The soil boring log sheet shall be prepared using the DelDOT *Bridge Boring Log Program* (BO-01-001, 2012). Further instructions on the use of the program are located on the DRC – *Bridges and Structures Tab*.

102.1.4 Bridge Number

The bridge number is a unique identification number assigned to each bridge (e.g., 1-393-441, 3-152-13A). The bridge number is assigned by the Bridge Management Engineer. The

bridge number consists of the county identification number (1 = New Castle County, 2 = Kent Count, and 3 = Sussex County), the unique bridge number, and finally the roadway designation number. For a new bridge, the designer should request the bridge number from the Bridge Management Engineer at the time of the TS&L submission. On bridge plans, the bridge number may omit the roadway designation number for a shorter presentation.

102.2 Special Provisions Development

Special provisions should be used to pay for an item of work if:

1. There is no standard specification that covers the type of work; or
2. The work is substantially different from the Standard Specifications and the differences will have a cost effect.

The use of special provisions should be minimized. Efforts should first be made to use a standard specification. However, the use of a special provision is appropriate when introducing new products or construction techniques.

The DelDOT Specifications Engineer is responsible for maintaining standard or modified specifications. Any special provisions needed for bid items not covered by standard or previously prepared special provisions must be prepared by the designer. The designer must coordinate the preparation and use of all project special provisions with the Specifications Engineer.

Prior to the Semi-Final Construction Plans submission, the designer must transmit electronic drafts (in MS Word format) of all project special provisions to the Specifications Engineer. The Specifications Engineer will review the draft special provisions; correct format, context and language; and compile the special provisions book. The Specifications Engineer will circulate the special provisions book to DelDOT Design and Construction at the time of the Semi-Final Plans Submission. Once comments received following the Semi-Final Construction Plans review are incorporated into the special provisions book by the designer, as assisted by the Specifications Engineer, the special provisions are considered final.

Additional guidance on the preparation and formatting of special provisions is located on the *DRC – Project Management Tab*.

102.3 Quantities and Cost Estimates

The calculation of quantities and creation of a cost estimate is required at every stage of the design process. The project cost drives numerous decisions during the development of the design and quantity calculations and cost estimates must be prepared in a diligent manner with accurate results.

The calculation of project quantities should be developed in accordance with the DelDOT *Quantity Calculations Guidelines* (2009), which is located on the *DRC – Cost Estimating & Project Timing Tab*. This document provides guidance on the calculation of several standard items that are commonly encountered on DelDOT projects.

DelDOT also maintains a unit cost history for all bid items that should be referenced in the development of cost estimates. Unit costs from the DelDOT history can be used as a starting

point and should be adjusted to reflect project-specific characteristics, such as quantity size, project location, and site conditions. The unit cost history can be obtained on the *DRC – Cost Estimating & Project Timing Tab*.

102.4 Construction Schedule

A detailed construction schedule shall be prepared for each bridge project. Preparation of the construction schedule must be coordinated with the Office of Performance Management. Specific requirements related to the development of the construction schedule, including historic production rates for various construction activities, are located on the *DRC – Cost Estimating & Project Timing Tab*.

For Department-designed projects, the designer should request the preparation of a Critical Path Method Schedule from the Office of Performance Management. For consultant-designed projects, the consultant is responsible for the preparation of the Critical Path Method schedule, which must be submitted for review by the Office of Performance Management.

102.5 Bridge Design Procedures

102.5.1 Quality Assurance and Quality Control

In designing bridges and other highway structures, the designer's mission is to prepare safe, durable, and economical design solutions, produce a quality set of plans that meet the project requirements, and use details that are consistent with DelDOT practices and suitable for bidding and construction.

The development of all bridge projects should adhere to the requirements of DelDOT's *Quality Assurance/Quality Control Plan* (2009) and the *Plan Development Process* (2010), both of which can be found on the *DRC – Project Management Tab.* The plan development checklists are also a vital element of DelDOT's Quality Assurance / Quality Control (QA/QC) process and should be utilized for each submission. The checklists include:

- Plan Submission Checklist – *DRC – Project Management Tab*
- Concrete Girder Bridge Plan Checklist – *DRC – Bridges and Structures Tab*
- Steel Girder Bridge Plan Checklist – *DRC – Bridges and Structures Tab*
- Precast Concrete Arch or Rigid Frame Bridge Plan Checklist – *DRC – Bridges and Structures Tab*
- Precast Concrete Box Culvert – *DRC – Bridges and Structures Tab*

In accordance with the *Quality Assurance/Quality Control Plan,* consultants must submit a project-specific QA/QC Plan prior to commencing work on a project. The consultant QA/QC plan will be reviewed by and mutually agreed upon by DelDOT's project manager and the consultant.

102.5.2 Designed-In Value

102.5.2.1 *Alternatives Analysis*

For structures requiring a TS&L submission as outlined in *Section 102.6.5.1 – Type, Size, and Location Submission Requirements*, the designer should evaluate several alternative bridge types. This will aid in the selection of the most appropriate structure type. At least three bridge

types that pass the logical selection process should be submitted in the alternatives study included with the TS&L submission, together with a preliminary first cost/construction cost or life-cycle cost analysis (LCCA) and a final recommended bridge type.

For major and complex bridges, as defined in *Section 101 – Introduction* herein, a minimum of two bridge types should be studied for each: a steel and concrete alternate design. One bridge type may be accepted if a reasonable explanation is provided.

102.5.2.2 *Life-Cycle Cost Analyses*

For beam-type structures and structures that require a TS&L submission as outlined in *Section 102.6.5.1 – Type, Size, and Location Submission Requirements*, the selection of a recommended structural alternative shall be based on a first cost / construction cost or LCCA. For most structures, a first cost / construction cost analysis is used. An LCCA is used for major and complex bridges, as defined in *Section 101 – Introduction* herein, or as directed by the Bridge Design Engineer.

LCCAs shall be performed for bridge projects or project elements to assist in determining the best alternative. An LCCA should be included with the TS&L submission to compare the costs of each considered alternative. The following should be considered:

- Design costs
- Construction costs
- Right-of-way costs
- Routine maintenance costs
- Periodic maintenance and rehabilitation costs
- Service life (typically 100 years)
- Operating costs
- Accident costs
- User costs

An LCCA shall be performed in studying alternate design concepts to compare the benefits and costs at different times in a bridge structure's life span. Future benefits and costs over the proposed time span of each alternative should be evaluated. A long-term perspective should be considered in programming improvements and selecting among alternative design, maintenance, rehabilitation, and reconstruction strategies in designing bridge structures. Refer to FHWA publication *Life-Cycle Cost Analysis Primer* (2002) available from the Office of Asset Management for more information (http://www.fhwa.dot.gov/infrastructure/asstmgmt/lcca.cfm).

102.5.3 Documentation of Design

The design of each bridge must be documented to provide a permanent reference for future use. Documentation of the design should follow the requirements of the DelDOT *Quality Assurance/Quality Control Plan*, which is available on *DRC – Project Management Tab* and, at a minimum, should include the following:

- Design computations
- Specific references to specifications
- Assumptions

- Specific design criteria
- Hydraulic and hydrologic reports
- Foundation reports
- Quantity calculations
- Material properties
- Computer printouts, if the design was prepared using a computer (include the input, output, and the name and version of the software used)
- Design checklists
- Plan submission checklists
- Any design exceptions and/or design variances

The above noted items are in addition to those materials required for inclusion in the "Design Document Binder" as defined by DelDOT's *Quality Assurance/Quality Control Plan*.

The documentation should be kept in notebooks or folders for permanent storage in the contract file (alternatively, electronic files, in PDF format, may be retained). Each plan submission must include a copy of the design computations and printouts for review; they must include the date and the name/initials of the designer who performed the computations and the person who checked them on each sheet. The date and the name/initials of the DelDOT reviewer will be added following review of the computations. The cover sheet for the calculations shall have signature lines for the designer, checker, and reviewer to recommend what is contained therein. In the final plan submission, consultant designers should submit all of the original documentation to the Bridge Design Engineer. Any changes to the documentation should be submitted by the time construction is completed.

102.5.4 Design Exceptions and Design Variances

Typically, designs will meet or exceed the minimum Department-governing criteria and AASHTO new construction criteria for the 13 Controlling Design Elements. Occasionally, unusual conditions may warrant consideration of a lower standard. The need for design exceptions and design variances must be identified early in the design phase, so approval or denials do not delay completion of the design or require extensive redesign. In such cases, the proposed design must be thoroughly documented for review and approval by the Department and, if required, by FHWA.

Sufficient detail and explanation must be provided to build a strong case to those reviewing design exception and design variance requests. The 13 Controlling Design Elements are considered safety related and the strongest case must be made to accept a reduction in the stated standards. At some point, this justification may be required to defend the Department's and/or the designer's design decisions. All deviations must be uniquely identified, located, and justified. Blanket approvals will not be granted.

Generally, a design exception or design variance can be justified if it can be shown that:

- The required criteria are not applicable to the site specific conditions.
- The project can be as safe by not following the criteria.
- The environmental or community needs prohibit meeting criteria.

Most often a case for approval of a design exception or design variance is made by showing the required criteria are impractical and the proposed design wisely balances all design impacts. The impacts usually compared are:

- Operational impacts
- Impacts on adjacent section
- Level of service
- Safety impacts
- Long term effects
- Costs
- Cumulative effects

A justification should not be made solely on the basis that:

- The Department can save money.
- The Department can save time.
- The proposed design is similar to other designs.

The Design Exception and Design Variance Request Forms (Figure 102-1 and Figure 102-2) shall be used to document requests for variances. The designer must provide all the supporting rationale (e.g., the necessary design criteria, figures, calculations, cost analyses, accident records, mitigation costs, photographs, plan sheets) for each request in sufficient detail to document the request. The Project Design Control Checklist Form (Figure 102-3) and the Design Criteria Form (Figure 102-4) should be included in the documentation, if applicable. The Design Criteria Form applies to new construction or 4R projects. A project note shall be included in the plans listing the items that have approved design exceptions and/or design variances.

State Project No. _____ **Federal-Aid Project No.** _____

Date: _____ **Oversight Project:** **Yes** _____ **No** _____

Design Exception Abstract: (Provide a short summary detailing the nature of the exception, reasons for the request, etc.)

Note:
For all NHS projects, the 13 Controlling Design Elements to be met are design speed, through lane and auxiliary lane width, shoulder width, bridge width, structural capacity, horizontal alignment, vertical alignment, grades, stopping sight distance, cross-slope, super elevation, horizontal clearance, and vertical clearance.

RECOMMENDATION:

The purpose of this project is to _____.

The most effective method of addressing this is _____.

Based upon the conditions presented, it is recommended that a design exception be approved for the controlling substandard design element as justified.

Recommended By: _____
Supervising Engineer, Bridge Design

Recommended By: _____
Bridge Design Engineer

Recommended By: _____
Assistant Director, Design

Approved By: _____ **Date:** _____
Chief Engineer

Approved By: _____ **Date:** _____
Federal Highway Administration (where required)

Enclosures: (Include design criteria, figures, calculations, etc. to document request.)

FIGURE 102-1. DESIGN EXCEPTION REQUEST FORM

State Project No. _____ **Federal-Aid Project No.** _____

Date: _____ **Oversight Project:** **Yes** _____ **No** _____

Design Variance Abstract: (Provide a short summary detailing the nature of the variance, reasons for the request, etc.)

RECOMMENDATION:

The purpose of this project is to _____.

The most effective method of addressing this is _____.

Based upon the conditions presented, it is recommended that a design variance be approved for the controlling substandard design element as justified.

Approved By: _____

Supervising Engineer, Bridge Design

Approved By: _____

Bridge Design Engineer

_____

Enclosures: (Include design criteria, figures, calculations, etc. to document request.)

FIGURE 102-2. DESIGN VARIANCE REQUEST FORM

PROJECT DATA

Squad Leader Project Manager: _____
Project Title: _____
Contract No: _____
Federal-Aid Project No.: _____
Project Limits: _____
Type of Construction: _____
Project Scope and Initial Estimate: _____

DESIGN DATA

Functional Classification: _____ **Directional Distribution (%):** _____
Current AADT (Year): _____ **Design Speed:** _____
Projected AADT (Year): _____ **Design Vehicle:** _____
Projected DHV (Year): _____ **Design Level of Service:** _____
% Trucks: _____ **Clear Zone:** _____

Recommended By: _____
Squad Manager

Recommended By: _____
Group Engineer

Recommended By: _____
Assistant Director – Transportation Solutions

Approved By: _____
Director – Transportation Solutions

FIGURE 102-3. PROJECT DESIGN CONTROL CHECKLIST FORM

Design Criteria		
Design Factor	**As per *Road Design Manual***	**Provided**
Design Speed*		
Width of Through Lanes*		
Width of Auxiliary Lanes*		
Width of Outside Shoulder*		
Width of Inside Shoulder*		
Cross Slope*		
Width of Median		
Stopping Sight Distance*		
Minimum Horizontal Curve Radius*		
Minimum K (Crest)*		
Minimum K (Sag)*		
Maximum % Grade*		
Maximum Front Slope (Unprotected Section)		
Maximum Back Slope		
Barrier Offset		
Super elevation Rate (%)*		
Bridge Width*		
Vertical Clearance*		
Structural Capacity*		
Horizontal Clearance*		
Width of Clear Zone		

General Notes:

- Use this form primarily for new construction or reconstruction projects.
- The Chief Engineer must approve design criteria deviating from the requirements of the ***Road Design Manual*** using *Figure 102-1 – Design Exception Request.*

*FHWA-controlling criteria

Recommended By: _____

Supervising Engineer, Bridge Design

Recommended By: _____

Bridge Design Engineer

Approved By: _____

Assistant Director, Design

FIGURE 102-4. DESIGN CRITERIA FORM

The FHWA has delegated the responsibility for the review of design exceptions and/or design variances for designs both on and off the NHS to DelDOT. FHWA will review only for projects meeting the following criteria:

- A project that is identified as a PoDI and for which the design has been chosen for oversight; or
- The project is unique and the Department requests FHWA involvement.

102.5.5 Chronology of Submissions

The chronology of the bridge-related submissions for approval shall be made as indicated on the Plans Submission Checklist, which is located on the *DRC – Project Management Tab* and as follows:

1. Preliminary Design
    a. Draft hydrologic and hydraulic (H&H) report (if applicable) (see *Section 104 – Hydrology and Hydraulics*)
    b. Draft scour evaluation report (if applicable) (see *Section 104 – Hydrology and Hydraulics*)
    c. Conceptual TS&L plans
    d. TS&L
    e. Draft foundation report (see *Section 105 – Geotechnical Investigations*)
2. Preliminary Construction Plans
    a. Final H&H report
    b. Final scour evaluation report
    c. Final foundation report
3. Semi-Final Construction Plans
4. Final Construction Plans
5. PS&E

102.6 Preliminary Design

102.6.1 Hydrologic and Hydraulic Report

An H&H report is required for any bridge over a stream or tidal area. The report must provide a hydraulic analysis, flood profiles for the various design years, and recommendations. Preparation of the H&H report and design year criteria are covered in *Section 104 – Hydrology and Hydraulics.*

102.6.2 Scour Evaluation Report

A scour analysis is required for any structure over a stream or tidal area. The report must include the scour calculations and recommended countermeasures, as well as include other details of the evaluation. Preparation of the scour evaluation report and analysis procedure is covered in *Section 104 – Hydrology and Hydraulics*.

102.6.3 Foundation Reports

Foundation reports are required for all structures. Geotechnical investigations and the foundation report preparation must be completed in accordance with *Section 105 – Geotechnical Investigations.* Following the completion of a subsurface exploration program, the DelDOT Geotechnical Engineer will prepare a geotechnical data report for use by the designer in developing the foundation design. The foundation report must be prepared to evaluate and recommend foundation design parameters and a foundation type. Among other items, the foundation report shall include the soil bearing capacity, the type of foundation, and, if piles are recommended, the type and size of piles.

102.6.4 Conceptual Type, Size, and Location Plans

Conceptual plans prior to the submission of TS&L plans are only required on major or complex bridge projects or at the discretion of the Bridge Design Engineer. When conceptual TS&L plan submissions are required, the following items must be submitted:

1. Conceptual TS&L Plan(s) that include:
    a. Plan and elevation
    b. Typical Sections
    c. Structure type
    d. Span lengths
2. Conceptual TS&L Report that includes:
    a. Beam design calculation (can be based on available design charts)
    b. Basic bridge geometry (to demonstrate required clearances within 6 inches)
    c. Cost comparison of considered alternatives
3. Subsurface investigation requirements (i.e., geotechnical data report per *Section 105 – Geotechnical Investigations*)
4. Preliminary hydraulics and hydrologic report (if applicable) (see *Section 104 – Hydrology and Hydraulics*)

102.6.5 Type, Size, and Location Submission

The investigation of a proposed structure shall be sufficiently thorough to objectively select and justify the TS&L on the basis of the information available from the various phases of study, including any foundation information obtained. Preliminary cost comparisons shall be

made to support the TS&L recommendations. The TS&L submission must be forwarded to the FHWA for review when required for PoDI oversight projects.

102.6.5.1 *Type, Size, and Location Submission Requirements*

Structures with an estimated cost of $1 million or greater require a formal TS&L submission. TS&L plans may be required on other projects at the discretion of the Bridge Design Engineer. For design of state-funded projects and smaller Federal-aid projects, the TS&L submission and approval process is incorporated into the standard Preliminary Construction Plans submission and review procedures.

The TS&L submission consists of a TS&L plan(s) and a TS&L alternatives study report. The following information shall be included for a TS&L submission:

1. TS&L Plans: The following information shall be shown on the TS&L plan(s):

    a. Plan view, including controlling clearances, span length, skew, existing contours and finished contours, scupper locations, and end structure drainage, where required;

    b. Elevation view showing controlling clearance, span length, existing and finished ground line, continuity, support condition (fix/expansion), type and movement classification of expansion dams, type of bearings, and protective fence locations;

    c. Cross-section showing out-to-out dimension, traffic lanes, shoulder widths, beam type, size and spacing, overhangs, cross-slope, superelevation, minimum slab thickness, type of traffic or pedestrian barrier, thickness of wearing surface, and protective fence;

    d. Typical sections showing limits of individual construction stages, for cases where construction of the bridge is required to be performed in stages; locations of longitudinal joints in the deck; locations and the type of temporary barriers; and traffic lane locations and widths;

    e. Elevation view of pier(s) showing proposed configuration, where required;

    f. Deck protective system (for rehabilitation projects only);

    g. Loading, design, and analysis method; and non-standard details;

    h. Soil boring locations;

    i. Hydraulic information, including design flood data, flood of record and date, slope protection, where required, and preliminary scour information;

    j. Horizontal and vertical curve data for all roadways (and railroads as applicable);

    k. For retaining walls, the length and height for each segment (note that the TS&L for walls will not be approved until the foundation recommendation is provided);

    l. Bridge-mounted lighting poles, sound barriers, and signs, if required.

2. TS&L Report: The report should address alternates studied and justification for the recommended bridge type, as well as include the following:

a. Cost comparison for all types considered during the TS&L study. The cost estimate shall be arranged to indicate total cost per substructure unit and major portions of superstructure (e.g., rolled beam span, plate girder span). Cost comparisons should also be prepared to consider the total project cost, which reflects non-bridge costs that may be affected for each respective bridge alternative. For bridge replacement projects, the cost data should include a cost comparison for the rehabilitation of the existing structure. Likewise, for major bridge rehabilitation projects, cost data should include a cost comparison for a replacement structure.

b. Justification for recommended alternate.

c. Address the need to account for future widening and future redecking requirements of the recommended bridge.

d. Pedestrian count information concerning possible future development that might warrant need for sidewalks and/or pedestrian protective fence.

e. For the recommended bridge type, beam design calculations for the controlling interior and fascia beam; geometry calculations sufficient to confirm the vertical and horizontal clearances; deck drainage calculations; and expansion joint movement calculations.

f. Constructability discussion for major and/or complex structures.

g. The preliminary foundation report and calculations.

h. If applicable, preliminary H&H report and calculations, and preliminary scour analysis.

i. Plan submission and girder type checklist (for the recommended structure) completed for the TS&L submission.

j. Completed Project Design Control Checklist Form (Figure 102-3) and Design Criteria Form (Figure 102-4).

3. For rehabilitation projects:

a. Age of existing structure, present and cumulative average daily truck traffic (ADTT), portion to be replaced, type of steel for steel bridges, date of last inspection, type of diaphragm connections (i.e., welded or riveted), type and location of deterioration, deck drainage, expansion dam type, barrier type, and other pertinent items.

b. Live load ratings of the bridge at present and after rehabilitation.

c. Fatigue-prone details, such as out-of-plane bending problem areas, cover-plated beams, remaining fatigue life with and without retrofit, fatigue problems observed during inspection, recommended retrofit for existing fatigue-prone details, and other pertinent items.

d. Proposed scope of work.

4. For structures involving the railroad:

   a. Railroad right-of-way cross sections (500 feet on each side of the proposed structure), degree of track curvature, and rate of superelevation, if applicable.

   b. Investigation and description of existing railroad drainage facilities and conditions in the vicinity of the structure site.

   c. A copy of the railroad company's letter of approval of acceptance regarding horizontal and vertical clearances as well as a request for temporary support of railroad tracks, if required.

   d. Demolition procedures, including a schematic plan, shall be provided for the removal of structures over or adjacent to railroads. The procedures and schematic must be coordinated with the railroad representatives.

102.7 Preliminary Construction Plans

The submissions required at the preliminary plan stage are as follows:

1. Preliminary structure plans
2. Preliminary structure calculations
3. Preliminary structure cost estimate
4. Preliminary special provisions for unique items
5. Final geotechnical and foundation reports
6. Final hydraulics report (if applicable)
7. Final scour analysis (if applicable)

At this stage of design, core structure calculations, such as beam designs, bridge geometry, and foundation design (i.e., footing dimensions and/or pile types and sizes), should be finalized and checked.

Preliminary structure plans shall be developed to a level of detail commensurate with that required by the Plan Submission Checklist and applicable Girder Type Submission Checklist (available on the *DRC – Project Management Tab* and the *DRC – Bridges and Structures Tab* respectively). The preliminary structure plans should include the items required for a TS&L plan submission (see *Section 102.6.5.1 – Type, Size, and Location Submission Requirements*) in addition to the items noted below:

1. Existing utilities
2. Limits of construction (LOC)
3. Existing right-of-way
4. Proposed right-of-way

5. Erosion and sediment control measures

6. Environmental compliance measures

When determining the limits of construction, the designer should consider the temporary and permanent impacts due to erosion and sediment control facilities, existing and proposed utilities, and construction staging. The coordination required at the Preliminary Construction Plans stage of design is specified in the *Project Development Manual* (PDM; 2015) and the *Plan Development Process*.

The Preliminary Construction Plans submission must be forwarded to the FHWA for review when required for PoDI oversight projects.

102.8 Semi-Final Construction Plans

The Semi-Final Construction Plans are approximately 85 percent complete along with specifications, quantities, and cost estimates. The submission includes everything required for a complete design, except final quantities. At this stage of design, all structure calculations should be finalized and checked.

Semi-final structure construction plans shall be developed to a level of detail commensurate with that required by the Plan Submission Checklist and applicable Girder Type Submission Checklist.

Bridge load ratings shall be prepared and submitted at this stage of design. The load ratings and accompanying information shall be prepared in accordance with the requirements of *Section 108 – Bridge Load Rating*.

All bid items must be listed at this stage of design. Estimated quantities for the bid items may not be final for this submission.

Included with this submission should be a draft of all special provisions and a construction schedule.

A cost estimate based on the semi-final design quantities is prepared as a check on the initial cost estimate. The designer should advise the Bridge Design Engineer of any significant changes in the estimated cost of the project.

The Semi-Final Construction Plans submission must be forwarded to the FHWA for review when required for PoDI oversight projects.

102.9 Final Construction Plans

Final Construction Plans are an update of semi-final plans and should be considered a 100 percent complete design. Final Construction Plans are distributed to the various Department units solely to collect final statements and are not generally commented upon. Final Construction Plans include:

1. Final structure plans

2. Final structure quantities, including checked calculations

3. Prepared and checked structure design calculations

4. Final bridge load ratings
5. Final construction schedule
6. Final special provisions
7. Cost Estimate

The designer must incorporate into the plans all requirements specified in statements, agreements, and permits (e.g., towns, utilities, railroads, right-of-way, environmental). The terms of the permits and acquisitions are defined in the project agreements. Some conditions in the project agreements may affect the project design and the requirements placed on the contractor. Designers must review all project agreements to ensure that all requirements are included in the plans.

The Department maintains a unit cost history for all bid items. Unit costs from this history should be used as a starting point for the project cost estimate. These unit costs should be adjusted for project characteristics such as quantities, location, and site conditions.

One copy of the final plans, quantity calculations, and time estimate should be sent to Construction and Office of Performance Management for review at the final plan stage.

The Final Construction Plans submission must be forwarded to the FHWA for review when required for PoDI oversight projects.

102.10 Plans, Specifications, and Estimate

The PS&E submission is the final step before advertising the project for bid. All submissions are directed to the PS&E Coordinator.

1. The designer submits the final plans and estimates. Cost estimates must be submitted electronically using the Department's engineering software, Trnsprt.
2. PS&E Plans must be submitted in PDF file format in accordance with the *CADD Standards Manual.*
3. The DelDOT Specifications Engineer submits the completed special provisions.
4. All other DelDOT sections (Traffic, Environmental Studies, Utilities, Railroad, and Real Estate) submit their statement for advertisement.

When the Office of Performance Management receives all of the necessary submittals, they are sent to Contract Administration for project advertisement.

102.11 Bid-Cycle Requirements

102.11.1 Addenda

Addenda are design changes that are made between the time the project is advertised for bid and the opening of bids.

Because contractors must have time to prepare their bids, addenda cannot be accepted later than 5 calendar days, as dictated by the Department, before the bid opening date. Addendum

changes of major significance after that date may require that the project bid opening be postponed or canceled and re-advertised.

Attention should be drawn to changes made to plans by way of an addendum by clouding the change and identifying the change consistent with the addendum number (e.g., ADD 1). The cloud should be accompanied by the addendum symbol, which is a triangle with the addendum number inside. Addenda should be noted in the revision block of the applicable plan sheet. This revision block notation should include the date of the addendum and initials of individual responsible for the addendum.

A new right-of-way statement is required for any addenda that require additional right-of-way.

102.11.2 Bid Opening and Bid Review

Following the bid opening, DelDOT Contract Administration reviews the bids to identify any irregularities. The bid tabulations are typically forwarded to the designer within 1 day of the bid opening. The designer must receive a copy of the bid tabulations for review. The designer shall review the bid prices and total cost against the engineer's estimate and determine whether there are any unbalanced bids (DelDOT personnel should refer to Design Guidance Memorandum No. 1–5*: Bid Analysis and Recommendation to Award Procedures* (DelDOT DGM 1-5) (2002), which provides the specific steps to be used in the review of bids). Refer to the Standard Specifications for criteria for unbalanced bids. Individual item bid prices that are 20 percent higher or lower than the estimated costs require analysis and possible discussion with the low bidder in the form of a pre-award meeting.

102.12 References

DelDOT, 2009. *Quality Assurance/Quality Control Plan*, Division of Transportation Solutions, January 2009.

DelDOT, 2009. *Quantity Calculation Guidelines*, December 31.

DelDOT, 2010. *CADD Standards Manual,* May.

DelDOT, 2010. *Plan Development Process*, December 22.

DelDOT, 2010. *Rebar Sheet Program*, Engineering Instruction BR-10-001, April 22.

DelDOT, 2012. *Boring Log Program*, Engineering Instruction BO-01-001, November 27.

DelDOT, 2015. *Project Development Manual*, July.

DelDOT, 2002. Design Guidance Memorandum No. 1-5: *Bid Analysis and Recommendation to Award Procedures*, June 13.

FHWA, 2002. *Life-Cycle Cost Analysis Primer,* Office of Asset Management, August.

INTENTIONALLY LEFT BLANK

Section 103
Bridge Geometry and Structure Type Selection

103.1 Introduction

The purpose of this section is to establish policies and procedures for identifying DelDOT preferences for the geometric layout and selection of structure types for standard bridges in Delaware.

Considerations for bridge geometry shall take into account issues of highway safety, including sight distance, adequate horizontal and vertical clearances, and bridge geometry compatible with the approach roadway and/or with minimum standards as indicated herein.

Considerations for structure type selection include economics, constructability, inspectability, and design in accordance with established standards for design and construction to facilitate inspection and future maintenance.

103.2 Terms

AASHTO LRFD – Reference to the AASHTO LRFD within this section shall be considered a reference to *AASHTO LRFD Bridge Design Specifications*, 7th Edition, 2014.

AASHTO Green Book – Reference to the AASHTO Green Book or Green Book within this section shall be considered a reference to AASHTO: *A Policy on Geometric Design of Highways and Streets*, 6th Edition, 2011. The FHWA recognizes the AASHTO Green Book as a general set of guidelines for the design of highways and streets.

ABC Analytic Hierarchy Process (AHP) – A software package endorsed by FHWA that quantitatively analyzes various ABC construction alternatives based on user-selected criteria.

ABC Rating Score – A quantitative rating system that assesses the applicability of ABC to a bridge construction project and helps to determine which construction projects are more suited to ABC methods than conventional methods.

Accelerated Bridge Construction (ABC) – Bridge construction that uses innovative planning, design, materials, and construction methods in a safe and cost-effective manner to reduce the onsite construction time that occurs when building new bridges or replacing and rehabilitating existing bridges.

AREMA – AREMA stands for the "American Railway Engineering and Maintenance-of-Way Association," but for the purpose of this Manual, AREMA shall refer to the latest published version of the AREMA *Manual for Railway Engineering*.

Bridge Management System (BMS) – The system used by the Department to manage and track the inventory of bridges and their associated repair needs for the bridges in Delaware. DelDOT uses AASHTOWare™ Bridge Management software BrM (*formerly PONTIS software*) for the bridge management system.

Clear Zone – An unobstructed, traversable area provided beyond the edge of the traveled way for the recovery of errant vehicles. For the purpose of this Manual, this term refers to the horizontal clear distance between the edge of the traveled way and the nearest point of the closest adjacent structure (typically substructure) element.

FHWA Decision Flowcharts – Flowcharts used to qualitatively investigate the most suitable ABC method for a particular site established by the FHWA.

Fracture Critical Member (FCM) – A structural member in tension or with a tension element whose failure would likely cause a portion of or the entire bridge to collapse.

Geosynthetic Reinforced Soil / Integrated Bridge System (GRS/IBS) – A popular type of ABC technology, GRS consists of closely spaced layers of geosynthetic reinforcement and compacted granular fill material and is commonly used in constructing bridge abutments. GRS/IBS includes a reinforced soil foundation, a GRS abutment, and a GRS-integrated approach.

Horizontal Clearance – Horizontal clearance under a bridge is measured as the perpendicular distance from the edge of the traveled way below the bridge (or from the centerline of track for bridges over a railroad) to the nearest point along the adjacent abutment face or bridge pier within the associated vertical clearance envelope.

Link Slabs – This term refers to bridge superstructures that provide for the construction of a continuous deck over interior supports, but do so while accommodating simple-span beam end rotations (i.e., no superstructure moment continuity over the interior supports) for all dead loads and live loads. A section of deck slab over the interior support is typically constructed after the remainder of the deck is placed and designed to accommodate the beam end rotations due to superimposed dead loads and live loads. Link slab bridges work to eliminate deck joints over interior supports and accommodate longitudinal translations over the entire length of the superstructure unit, as defined by the limits of continuous deck. Link slab bridges can typically offer a construction time-savings advantage over *simple-made-continuous* type construction.

Mean High Water (MHW) – Average of all the high-water heights observed over a period of several years.

Mean Low Water (MLW) – Average of all low-water heights observed over a period of several years.

Prefabricated Bridge Elements and Systems (PBES) – A common ABC approach that involves transporting prefabricated elements and systems from an off-site location to the final bridge site.

Redundancy – This term, in reference to structural systems, refers to structures that are configured or designed such that the failure of any one member or connection will not lead to the overall failure, or collapse, of the entire structural system.

Self-Propelled Modular Transporters (SPMT) – A popular ABC structural placement method, a SPMT is a high-capacity transport trailer that can lift and move prefabricated elements with a high degree of precision and maneuverability.

Simple-Made-Continuous Construction – This term refers to bridge superstructures that are constructed as simple spans for beam self-weight and concrete deck slab weight, and made continuous for superimposed dead loads and live loads. This type of construction is more typical for prestressed concrete bridges, but can also be used for steel bridges. Although similar, simple-made-continuous construction is not to be confused with link-slab designs. Refer to the definition for *link slab* above for comparison.

Skew – DelDOT and AASHTO define skew angle as the angle between the centerline of a support and a line normal to the roadway baseline, which shall be the angle denotation used in this Manual. Refer to Figure 103-2 for an illustration of bridge skew.

Skew Index Factor (I_s) – The skew index factor is defined in National Cooperative Highway Research Program (NCHRP) Report 725: *Guidelines for Analysis Methods and Construction Engineering of Curved and Skewed Steel Girder Bridges* (2012). The skew index factor aids in the determination of recommended methods of analysis for skewed bridges. Refer to *Section 106.8.8.1.1 – Determination of Appropriate Analysis Method using NCHRP Report 725* for a method of calculating the skew index factor.

Traveled Way – The portion of the roadway for the movement of vehicles, excluding the shoulders. As such, the traveled way is the horizontal limits within roadway lane(s).

Vertical Clearance – The vertical clearance for bridges is measured as the minimum vertical dimension between the roadway (or railroad tracks) under the bridge and the closest bridge element. The horizontal limits of the vertical clearance envelope below the bridge shall include the entire traveled way and the limits of the paved shoulders for the roadway below the bridge. The designers shall refer to AREMA Chapter 28 (or as required by the Railroad, whichever controls) for description and diagrams depicting the required vertical clearance envelope for railroads under bridges.

103.3 Bridge Geometric Design Requirements

103.3.1 Bridge Length

In general, bridge limits shall be established incorporating the following considerations:

1. For underpass roadways, provide span lengths as required to meet current roadway geometric design requirements as specified in the DelDOT *Road Design Manual* (2004).
2. Set span configurations to achieve the horizontal clearance requirements for underpass roadways, railroads, and waterways as specified in *Section 103.3.4 – Horizontal Clearance and Pier Protection.*
3. Consider the potential for future widening of roadways below the bridge.
4. Design the structure to limits that minimize the total project costs. Depending on approach roadway construction requirements, including the construction of embankments and retaining walls, the least bridge cost does not always equate to the least project cost.

5. Design to meet the "Clear Zone Concept," as deemed applicable for a particular project. Refer to *Section 103.3.4.2.1 – Delaware Clear Zone Concept* for description of the Delaware Clear Zone Concept.

103.3.2 Minimum Width of Bridges

Minimum bridge width is a function of the roadway classification, average daily traffic (ADT), design speed, existing roadway features, and the proposed roadway improvements.

Bridge width for this section of the manual shall be defined as the clear distance between the gutter lines on the bridge. This will include the traveled way and the shoulder width on each side of the traveled way.

For new bridges on new alignments, the minimum bridge width, as measured from curb to curb over the bridge, shall match that of the approach roadway width. The approach roadway width is defined as the width of the approach traveled way plus approach paved shoulder width(s).

For construction projects where existing bridges are rehabilitated (i.e., bridge to remain with new deck or superstructure) and bridge replacement projects on an existing alignment, the bridge width shall match that of the width requirements for a new bridge, where feasible. Regardless of approach roadway width, the following minimum bridge width should be provided as indicated in Table 103-1, unless otherwise approved by the Bridge Design Engineer.

The use of a projected 20-year ADT shall be used in determining the minimum bridge width for all projects.

In no cases shall the bridge width be less than the approach traveled way.

For long bridges (greater than 200 feet in length) supporting collector and local roads, consideration may be given to reducing the minimum roadway width over the bridge to the width of the approach travel way plus 3-foot shoulders, with approval of the Bridge Design Engineer.

Cases where additional roadway width over the bridge may be required in comparison to the minimum widths provided in Table 103-1 include, but are not limited to:

1. Additional shoulder width for bridge deck drainage, in accordance with *Section 103.3.2.1* – Shoulder Width Requirements for Deck Drainage

2. Additional shoulder width over the bridge for horizontal sight distance

3. Safety considerations for shoulder widths over bridges; shoulder widths between 4 feet and 6 feet should generally be avoided where there is a possibility for vehicular shoulder use (travel, parking, or disabled vehicle use) adjacent to the bridge rail (Note that the 4-foot and 6-foot shoulder widths listed above do not include the additional 2-foot bridge barrier offset)

4. Proposed or future re-decking considerations

5. Future widening considerations

6. As required by roadway design

7. Potential for future shared use path

8. Inspection/maintenance activities

TABLE 103-1. MINIMUM WIDTH CRITERIA FOR BRIDGES[1]				
	Bridges To Remain[2]		Reconstructed Bridges[3]	
	Collector & Local Roads	Arterials & Expressways	Collector & Local Roads	Arterials & Expressways
Traffic Volumes (Future ADT)	Min. Bridge Width (2 Lanes)	Min. Bridge Width (2 Lanes)	Min. Bridge Width	Min. Bridge Width
400 and under	22 ft[4]	28 ft	Traveled Way + 4 ft	Note 7
401 to 1500	22 ft	30 ft	Traveled Way + 6 ft	Note 7
1,501 to 2,000	24 ft	30 ft	Traveled Way + 8 ft[6]	Note 7
Over 2,000	28 ft[5]	30 ft	Approach Roadway Width[6]	Note 7

[1] The table values meet or exceed the requirements of the AASHTO Green Book.

[2] "Bridges to Remain" include bridge rehabilitations and deck replacements.

[3] "Reconstructed Bridges" include bridge widening, superstructure replacements, and bridge replacements.

[4] For local road bridges to remain in place only: For an ADT of 50 or less, the minimum bridge width is 20 feet.

[5] For local and collector roads with ADT over 5,000 and bridge length less than 200 feet, a 32-foot minimum bridge width is required.

[6] For bridges > 100 feet, the minimum width is the traveled way plus 6 feet.

[7] For reconstructed bridges supporting arterials and expressways, all reasonable attempts shall be made to match the approach roadway width. For bridges over 200 feet long, the minimum bridge width of traveled way plus 8 feet may be considered.

103.3.2.1 *Shoulder Width Requirements for Deck Drainage*

For bridges where the highway design speed is less than 45 miles per hour, the size and number of deck drains shall be such that the spread of deck drainage does not encroach on more than one-half the width of any designated traffic lane.

For bridges where the highway design speed is not less than 45 miles per hour, the spread of deck drainage should not encroach on any portion of the designated traffic lanes.

Hydraulic computations for the assessment of bridge deck drainage shall be in accordance with FHWA Hydraulic Engineering Circular No. 22 (HEC-22), *Urban Drainage Design Manual* (2009).

In addition to using the design methods presented in HEC-22 for evaluating rainfall and runoff magnitude and determining gutter flow, bridge deck drainage systems are also to be designed in conformance with the HEC-21, *Design of Bridge Deck Drainage* (1993). HEC-21 presents the hydraulic design requirements from the viewpoints of bridge hydraulic capacity, traffic safety, structural integrity, practical maintenance, and architectural aesthetics. System hardware components, such as inlets, pipes, and downspouts, are described in HEC-21. Guidance for selecting a design gutter spread and flood frequency is also provided.

If the hydraulic computations determine that bridge deck drainage is required, the length of the deck overhang and the placement of the fascia stringer/girder shall be optimized to accommodate the drains and downspouts.

Refer to Section 6.3 of the *Road Design Manual* for the design storm frequency to be used in the bridge deck hydraulic computations.

103.3.2.2 *Sidewalks*

Unless otherwise approved by the Department, the width of sidewalks on bridges should match the width of sidewalk on the approach roadway, but should not be less than 5 feet, or as required by the *Pedestrian Accessibility Standards Manual.*

Consideration can be given to providing a 4-foot sidewalk so long that a 5-foot minimum long passing area of 5-foot minimum width is provided every 200 feet. If the bridge is less than 200 feet long, then the use of 4-foot sidewalks can be considered when there are constraints preventing practical application of a 5-foot wide sidewalk. Use of less than 5-foot wide sidewalk must be approved by the Bridge Design Engineer and documented in accordance with the *Pedestrian Accessibility Standards Manual*.

Note that bridge sidewalk width does not include the width of a raised curb or protective barrier.

On bridges greater than 200 feet in length with two approach sidewalks, consideration can be given to providing a single sidewalk on one side of the bridge if safe crossings are provided at both ends of the bridge. Refer to the *Pedestrian Accessibility Standards Manual*, *Road Design Manual,* and the AASHTO Green Book for further guidance.

A protective barrier with minimum height of 42 inches between the traveled way and the sidewalk is required where roadway design speeds are 40 miles per hour or greater and should be assessed on a case-by-case basis for other conditions.

In cases where roadway design speeds are less than 40 miles per hour and a protective barrier is not proposed for use between the traveled way and the sidewalk, the minimum sidewalk width must factor in the 8-inch-wide curb poured monolithically with the sidewalk. For example, a monolithic sidewalk/curb that is 5 feet 8 inches in width provides the same functional width provided by a sidewalk 5 feet wide with a curb 8 inches wide.

The need for a sidewalk on the bridge where there is no approach sidewalk should be assessed on a case-by-case basis. The assessment should consider the potential for future approach sidewalk construction, cost, and right-of-way in accordance with the *Pedestrian Accessibility Standards Manual* and the *Road Design Manual.*

103.3.2.3 *Bicycle and Shared Use Facilities*

Requirements for bicycle and shared use facilities are outlined in the *Road Design Manual*, Section 10.9. The bicycle and shared use facilities provided on the approach roadway shall be provided on the bridge.

103.3.2.4 *Superelevation*

Where possible, transitioning of superelevation shall be completed outside of the limits of the bridge, including the limits of the approach slabs. If a superelevation transition within the limits of the bridge and approach slabs cannot be avoided, the designer must take great care to evaluate bridge deck elevations to ensure proper deck drainage. Superelevation transitions within the limits of the bridge can create flat spots on bridge decks that collect water and create hazardous driving conditions.

103.3.3 Protection for Median Gap of Parallel Structures

Where the distance between back-to-back barriers on parallel structures is between 6 inches and 12 feet and the bridge deck is greater than 6 feet above the ground or the resulting fall could result in serious bodily injury or death, the minimum barrier height for the median barrier will be 54 inches. Where required, the minimum median barrier height can be provided by a single full height barrier, full-height railing or the combination of a barrier equipped with a crash tested traffic railing. When implementing this standard, the design should adhere to the typical design criteria as applicable for the site specific conditions, such as horizontal sight distance, which may be impaired by the 54-inch median-side barrier. If the design criteria cannot be met, a design variance will be required, which should include an alternate means of fall protection, such as safety netting. The height of the fascia barrier for each bound of the parallel structures is not affected by this design requirement.

103.3.4 Horizontal Clearance and Pier Protection

103.3.4.1 *Over Rivers, Streams, Wetlands, and Floodplains*

Structures spanning waterways shall be designed to meet the specific H&H needs of the site. Refer to A2.3.1.2 – Waterway and Floodplain Crossing for the establishment of bridge length and for abutment and pier locations, as applicable. Refer to *Section 104 – Hydrology and Hydraulic*s for design requirements.

103.3.4.1.1 Over Navigable Waterways

Refer to A2.3.3.1 – Navigational, AC2.3.2.1, and AC2.3.3.1.

For new bridges over navigable waterways, designers should be cognizant of the requirements for vessel collision resistance or protection, as specified in A2.3.2.2.5 – Vessel Collisions, AC2.3.2.2.5, and A3.14 – Vessel Collision: CV and *Section 203.14 – Vessel Collision: CV*. Span configurations over navigable channels are subject to review by the U.S. Coast Guard and shall meet the requirements of vessel collision risk analysis as specified in A3.14 – Vessel Collision: CV. Note that these provisions often lead the design toward the placement of substructure units outside of the navigable waterway, where practical.

The assessment of vessel collision risk analysis and/or for the design of vessel collision protection systems for existing bridges is at the discretion of the Department, to be assessed on a project-by-project basis.

103.3.4.2 *Over Roadways / Grade Crossings*

The horizontal clearance for grade separation structures is measured as the perpendicular distance from the edge of the traveled way (lanes) below the bridge to the nearest point along abutment face or bridge pier within the vertical clearance envelope.

Refer to A2.3.3.3 – Highway Horizontal and Section 3.3.6 of the *Road Design Manual*. As stated in the Chapter 3 of the *Road Design Manual*, establishing horizontal clearances based on clear zone limits is desirable. Where the desired clear zone limits cannot be obtained, protection (rigid barrier or guardrail) between the edge of shoulder below the bridge and the face of the closest adjacent substructure unit is to be provided, unless the substructure unit was designed for or verified to resist the calculated collision load as specified in A3.6.5 – Vehicular Collision Force: CT. Even if the substructure unit was designed for the collision load, protection of the blunt end within the clear zone must be provided.

When a substructure unit falls within the clear zone, a minimum horizontal clearance of 14 feet is desirable, but shall not be less than what is required to provide for the normal shoulder width of the roadway below the bridge, plus the width and deflection requirements for the protection device (rigid barrier or guardrail) between the edge of shoulder and the substructure.

Refer to A3.6.5 – Vehicular Collision Force: CT for provisions for protection from and/or incorporation of vehicular collision forces into the design of abutments and piers. The means of pier protection from vehicular collision and the incorporation of vehicular collision forces as per A3.6.5 – Vehicular Collision Force: CT, are to be determined as part of the preliminary design phase.

103.3.4.2.1 Delaware Clear Zone Concept

Delaware has adopted a policy known as the Clear Zone Concept, which is an acceptable application for projects involving the replacement of short-span structures. As with all roadside safety decisions, each project should be evaluated on a case-by-case basis and should be designed in accordance with appropriate DelDOT, AASHTO, and FHWA design manuals. In general, the Clear Zone Concept is a design option where the structure length is extended to provide the minimum design clear zone in lieu of installing a guardrail or rigid barrier.

1. Background: The clear zone is an unobstructed, traversable area provided beyond the edge of the through traveled way for the recovery of errant vehicles. The provision of a clear zone is applicable to new construction and re-construction projects pursuant to guidance outlined in the AASHTO *Roadside Design Guide* (2011). On existing roads, primarily those of an older or lower-order nature, a clear area has been established through maintenance activities. While this practice is strongly encouraged, these areas should not be construed as providing the same safety benefit as clear zones. In general, the clear zone, or forgiving roadside concept is the preferred method of achieving roadside safety. The four methods of establishing a clear zone are listed here in order of preference: eliminate obstacles; redesign obstacles so they can be safely traversed; relocate obstacles to a location where they are less likely to be struck; or reduce the impact severity of obstacles by using appropriate breakaway devices.

2. Bridge Types: Only bridge types eligible to be coded as "19" (Culverts) or "26" (Pipe Culvert) for Main Span Design Type in accordance with the FHWA *Specification for the National Bridge Inventory Bridge Elements* (2014) will be considered for designing according to the Clear Zone Concept.

3. Bridge Lengths: All crossroad pipes (single cell and multiple cells) are eligible for consideration for designing for the Clear Zone Concept. All box, frame, and arch structures with a structure length less than 20 feet will also be eligible for consideration for designing for the Clear Zone Concept.

4. Roadway ADT: Roadways with a design ADT of 400 or less should be given first consideration for designing for the Clear Zone Concept. Roadways with a design annual average daily traffic (AADT) of 1,000 or less are also eligible for consideration for designing for the Clear Zone Concept.

5. Existing Conditions: Unless removal is warranted and documented through the design process, roadways with existing roadside protection should be designed to include roadside protection. Designers should propose to meet existing conditions at a minimum, if design standards cannot be achieved.

103.3.4.3 *Over Railroads*

For highway structures passing over railroads, the horizontal clearance is measured as the perpendicular distance from the centerline of the nearest track to the nearest point along a bridge pier or abutment face below the bridge within the required limits of railroad vertical clearance envelope. See Figure 103-1 *for required limits*.

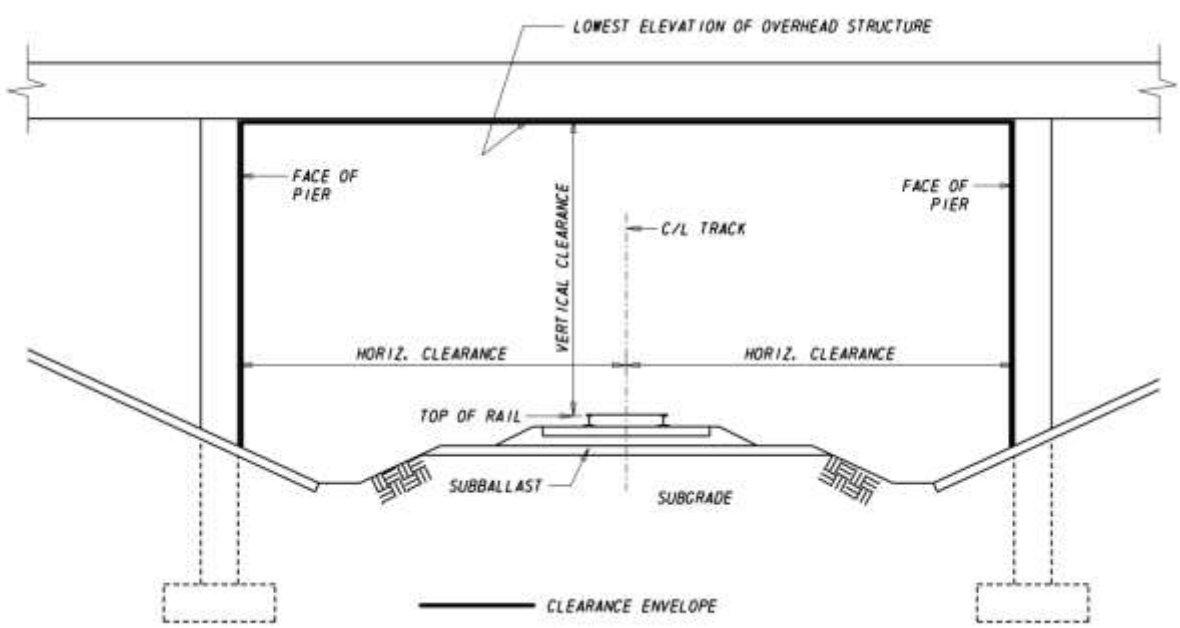

FIGURE 103-1. SAMPLE RAILROAD CLEARANCE ENVELOPE

Refer to A2.3.3.4 – Railroad Overpass and AC2.3.3.4.

Horizontal clearance and crash protection requirements for piers and abutments adjacent to railroads are subject to the standards of the specific railroad being overpassed for a given project location.

However, the minimum horizontal clearance, specified and provided, shall not be less than that shown in AREMA Chapter 28. An 18-foot lateral clearance from the centerline of track shall be provided for off-track equipment on one side, if requested by the railroad. Class 1 (major) railroads may require additional lateral clearance depending on the need for drainage ditches, an access roadway, and/or for off-track equipment. The requirements for crash walls for the protection of piers, in accordance with AREMA and as required by the specific railroad, are to be followed. Also, refer to A3.6.5 – Vehicular Collision Force: CT and AC3.6.5.1 for horizontal clearance limits where the incorporation of railroad collision forces into the design of abutments and piers is required, when crash protection is not provided.

The minimum horizontal clearance shall be shown for each track on the drawings. If track and abutment or piers are skewed relative to each other, horizontal clearances to the extremities of the structure shall also be shown. If the track is on a curve within 80 feet of the crossing, additional horizontal clearance is required to compensate for the curve (refer to AREMA, Volume 4, Chapter 28). If a railroad requests clearance in excess of the above, complete justification of this request shall be provided. The agreement on the lateral and vertical clearances shall be reached with the operating railroad and shall be secured prior to the TS&L submission.

Refer to *Sections 103.3.5.3 – Over Railroads* and *103.10 – Requirements for the Design of Highway Bridges over Railroads* for further requirements for the design of bridges over railroads.

103.3.5 Vertical Clearance

103.3.5.1 *Over Rivers, Streams, Wetlands, Floodplains*

Structures spanning waterways shall be designed to meet the specific H&H needs of the site.

As a minimum for inspection, bridges shall provide a minimum of 4 feet of vertical clearance above mean water levels to allow for inspection with a boat. For bridges over tidal waterways, provide at least 4 feet of vertical clearance above MLW and at least 1 foot of vertical clearance above MHW. Provide for a minimum vertical opening of 4 feet in box culverts and rigid frames, unless approved by the Bridge Design Engineer.

Refer to *Section 104 – Hydrology and Hydraulics* for design requirements.

103.3.5.1.1 Over Navigable Waterways

Refer to A2.3.3.1 – Navigational.

103.3.5.2 *Over Roadways / Grade Crossings*

Vertical clearance over roadways is defined as the minimum vertical distance between points on the roadway (lanes and shoulders) below the bridge and the corresponding bottom of the bridge superstructure.

Refer to A2.3.3.2 – Highway Vertical and Chapter 3.3.8 of the *Road Design Manual* for vertical clearance requirements. The design vertical clearances for new and reconstructed bridges shall provide for an additional 6 inches of clearance from the minimum values to allow for future roadway resurfacing.

Unless otherwise indicated by the reference manuals and codes listed above, the minimum vertical clearance for bridges over an expressway, an arterial, and a collector roadway facility is 16 feet 6 inches. The minimum vertical clearance over local roads is 14 feet 6 inches. Pedestrian bridges and overhead sign structures shall provide 17 feet 6 inches vertical clearance for all roads. The clearances listed above include the additional 6 inches of clearance for future roadway resurfacing.

103.3.5.3 *Over Railroads*

Refer to A2.3.3.4 – Railroad Overpass.

The requirements for vertical clearance over railroads are subject to the requirements of the railroad being overpassed for a given project location. Coordination with the owner of the railroad is required for all projects over or adjacent to railroads.

At a minimum, for structures carrying highways over railroad tracks, the vertical clearance, specified and provided, shall not be less than that which is shown in AREMA Chapter 28. Provide for an additional 10 inches of vertical clearance in the design from the minimum required clearance to allow for construction tolerances and future track re-profiling. See Figure 103-1 for minimum vertical clearance dimensions.

Refer to *Sections 103.3.4.3 – Over Railroads* and *103.10 – Requirements for the Design of Highway Bridges over Railroads* for further requirement for the design of bridges over railroads.

103.3.6 Bridge Skew

Bridge skew is defined as the angle between the centerline of a support and a line normal to the centerline of roadway, as illustrated in Figure 103-2.

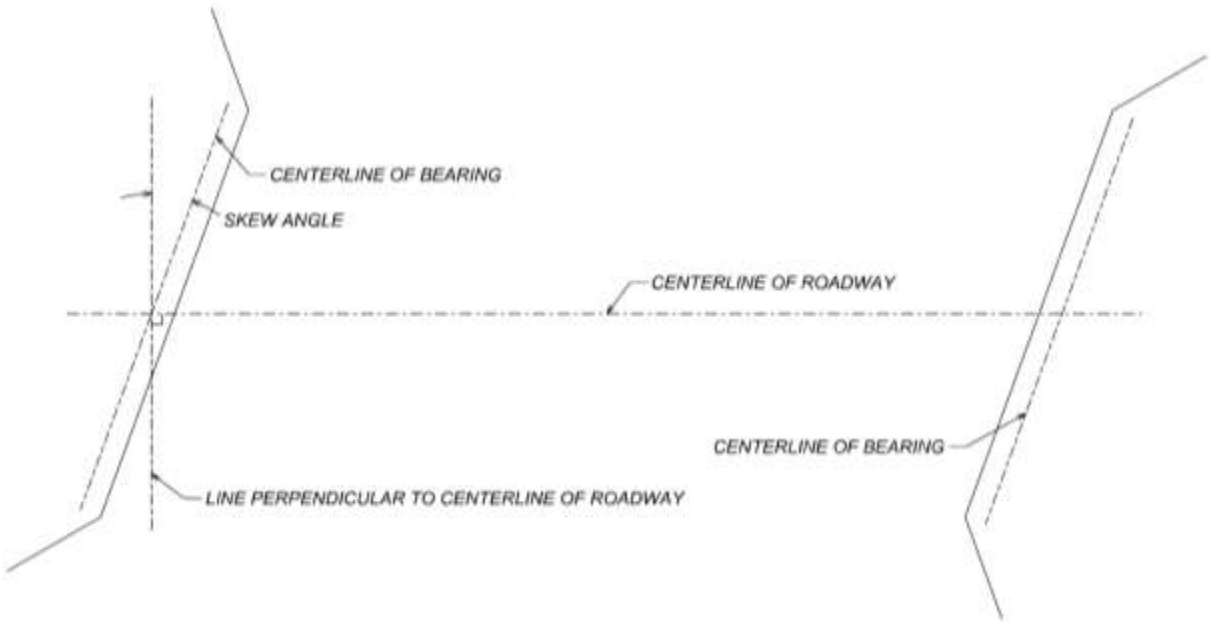

FIGURE 103-2. BRIDGE SKEW ANGLE

The selection of the magnitude of skew to provide is dependent on the type of feature(s) crossed; however, the designer should make every effort to minimize the bridge skew to 30 degrees or less to reduce the potential for deck cracking, minimize diaphragm or cross-frame loading, minimize the potential for uplift at acute corner end supports and minimize the potential for increased shears in members at obtuse corners. Reduction of bridge skew, and preferably the elimination of bridge skews, will also improve and simplify design, detailing, fabrication, and construction, as well as reduce future maintenance costs. In addition, substructure quantities and costs increase sharply with skews over 30 degrees.

New bridge substructures with skew angles greater than 0 and less than 10 degrees should generally not be proposed. Given the simplicity of fabrication and construction for zero skew bridges, substructure layouts between 0 and 10 degrees should be revised such that the skew angle is 0 degrees, when feasible.

For straight steel bridges whose Skew Index (I_s) is greater than 0.30, the designer shall identify and submit for approval the method (2-D grillage or three-dimensional [3-D] finite element) and software to be used to analyze the structure as part of the design, load rating, and assessment of bridge constructability. The method of analysis shall be in accordance with the recommendations of NCHRP Report 725 – *Guidelines for Analysis Methods and Construction Engineering of Curved and Skewed Steel Girder Bridges*. Refer to *Section 106.8.8.1.1 – Determination of Appropriate Analysis Method using NCHRP Report 725* for further description regarding the selection of appropriate analysis method for skewed steel I-beam bridges. Approval for the analysis method is to be obtained as part of the TS&L submission (or the preliminary plans submission when a TS&L submission is not required).

Refer to *Section 106.9.8 – Skew Effects* for maximum permissible skews for various prestressed concrete bridge types. For prestressed concrete bridges with skews greater than 45 degrees, the designer shall submit for approval the method of analysis for the design of the prestressed concrete beams and bracing members. The advanced analysis shall be used

to assess the stability of structure during construction and for the design of the structure in its final condition. Approval for the analysis method is to be obtained as part of the TS&L submission (or the preliminary plans submission when a TS&L submission is not required).

103.3.7 Approach Slabs

Approach slabs shall be provided on all structures supporting collector roads, arterials, freeways, and interstates. For local roads, approach slabs shall be provided for the following condition:

1. Approach slabs are required at abutments without a backwall, unless the full range of thermal movement of the superstructure at the abutment is predicted to be less than ½ inch.

2. Approach slabs are required on structures with integral and semi-integral abutments, unless the full range of thermal movement at the integral abutment is predicted to be less than ½ inch.

103.4 Structure Type Selection

103.4.1 Bridge Types

The bridge types listed in this section represent the bridge types commonly utilized in Delaware. These bridge types are not bridges that would be classified as unusual or complex, as defined in *Section 101.5.1 – Bridge Types*.

103.4.1.1 *Structural Steel*

Typical steel bridges used in Delaware include rolled I-beam, plate-girder, and box-girder bridges. The use of rolled beams is preferred to plate girders, unless span length, material or section availability, or construction lead time dictates otherwise.

Composite girders, with no fewer than four girders in the bridge cross section, are required, unless approved by the Bridge Design Engineer. Constant depth girders are preferred over haunched girders. Haunched girders should only be considered for unique site-specific conditions, such as vertical clearance concerns, or where aesthetics and/or economic considerations render them competitive.

The use of steel pin-hanger structures and “piggy-back” type construction are prohibited for new construction and should be replaced or retrofitted, when practical. Bridge types that contain FCM, are not permitted, unless otherwise approved by the Bridge Design Engineer.

Continuous spans shall be used for multiple span bridges. The ratio of the length of end spans to the intermediate spans should be 0.7 to 0.8. The latter ratio is preferred because it nearly equalizes the maximum positive moment of all spans. While three- and four-span continuous units tend to be more structurally efficient in comparison to single-span and two-span continuous units, the most-cost effective span configuration may simply be a function of the features crossed.

Always consider the presence of uplift at ends of continuous girders, particularly with light, rolled beam units or short end spans. AC3.4.1 indicates uplift to be checked as a strength load combination and provides guidance in the appropriate use of minimum and maximum

load factors. Uplift restraint, when needed (this is not common), should satisfy the strength limit state and the fatigue and fracture limit state. Spans should be proportioned to avoid the presence of uplift at supports.

The minimum depths for constant depth superstructures, as presented in Table A2.5.2.6.3-1 must be met. As a general rule, a well-proportioned straight multi-girder composite steel superstructure should have a total section depth (slab plus girder) in the range of 0.035 to 0.038 for continuous spans and 0.044 to 0.048 for simple spans. The AASHTO minimum depths for straight girders should be increased by a minimum of 10 percent for skewed and curved girder bridges, typically increasing in relation to severity of the curvature and/or skew. The 10 percent increase is a guideline for establishing a starting point for preliminary design. The overall superstructure depth will be determined by satisfying all strength and service limit states.

For plate girder structures, high-performance steel (HPS Grade 70) may be considered, where structurally prudent or where an economic advantage can be achieved. As a general rule, when the use of Grade 50 steel requires flange thicknesses greater than 3 inches, Grade 70 steel should be considered. Note that when high-strength steels are used, deflection criteria tend to control the design. Compliance with live load deflection criteria should be confirmed along with structural capacity. The use of HPS Grade 100 shall not be allowed without prior approval of the Bridge Design Engineer.

Refer to *Section 106.8.7 – Protective Coatings* for consideration for steel coatings and considerations for the use of weathering steel.

103.4.1.2 *Concrete Bridges*

103.4.1.2.1 Reinforced Concrete Slab Bridges

This superstructure type is not recommended for new construction and should only be considered for widening of existing reinforced concrete slab bridges when replacement with concrete box culvert or prestressed plank superstructure types are not feasible or economical. Instead of widening, existing reinforced slab bridges should generally be replaced when economically feasible.

103.4.1.2.2 Reinforced Concrete T-Beam Bridges

This type of superstructure is not recommended for new construction. Replacement of these bridge types should consider prestressed box beams or precast prestressed double-tee sections (i.e., NEXT beams) developed by the Precast/Prestressed Concrete Institute Northeast (PCINE).

103.4.1.2.3 Prestressed Concrete Bridges

Precast prestressed concrete members are economical and especially advantageous in situations where quick erection is desired. Precast concrete members can be fabricated year-round and can be delivered, erected and put into service in a very short time. Precasting permits better material quality control and helps provide for a maintenance-free service life.

Prestressed concrete beams shall be considered advantageous for spans over water and electrified railroads to reduce the hazards and disruptions to rail operations and/or costs associated with future painting of steel structures.

For multi-span units, simple-made-continuous design is the recommended structure configuration. Generally, multiple simple spans should be avoided where practical, due to reduced structural efficiency and the need for deck joints between each span. Continuous superstructure units of more than six spans are generally not preferable.

For the purpose of conceptual design and bridge alternative studies, beam charts from Chapter 6 of the Precast/Prestressed Concrete Institute (PCI) *Bridge Design Manual* and Table A2.5.2.6.3-1 can be used for preliminary beam sizing and spacing. Refer to *Section 106.9 – Prestressed Concrete Bridge Superstructures* for Delaware-specific design requirements for the final design of prestressed concrete bridges.

Where practical and deemed economically advantageous, configuring interior spans within multi-span units as equal spans is preferrable. Proportioning end spans from 0 percent to 20 percent less than the interior spans is also preferable for efficient use of superstructure material.

All concrete bridge beams will be precast and prestressed. Post-tensioning may be justified on a case-by-case basis.

Refer to *Section 205.4.2.1 – Compressive Strength* for concrete design strengths (f'_c), which are to be established during the preliminary design/TS&L stage.

103.4.1.2.3.1 Beam Types

Delaware uses a number of precast prestressed concrete beam types:

1. Voided or solid slabs: AASHTO has standardized a number of sections to accommodate a variety of bridge widths and span lengths in the 30- to 50-foot range. The sections are 36 to 48 inches wide with depths of 15, 18, and 21 inches. Thinner 12-inch sections may be designed by eliminating the voids. Adjacent prestressed concrete slab units are preferred at stream crossings having limited freeboard because they provide a continuous flat surface along the bottom of the superstructure that prevents debris from becoming trapped under the bridge and impeding the hydraulic flow. Voided slabs are prohibited over waterways that frequently flood and submerge the superstructure.

2. NEXT beams: These beams are used for short- to medium-span length bridges (30- to 90-foot range). The beams can be produced in a variety of lengths and widths, with the capability of spanning either longitudinally or transversely with respect to traffic. The beams offer an economical alternative to traditional concrete box beams. The NEXT beams comes in two configurations: an “F” (Form) option with a partial-depth flange serving as the formwork for a cast-in-place concrete deck and a “D” (Deck) option with a full-depth flange, which requires the installation of a membrane-wearing surface system.

3. Adjacent and spread box beams: These beams are used for short- to medium-span length bridges (50- to 130-foot range). Similar to the voided slabs, AASHTO has developed a series of standard box sections. Standard sections are available in 36- and 48-inch widths and a variety of depths to accommodate various bridge widths and span lengths.

4. PCEF bulb-tee beams: These beams are used for medium span length bridges (90- to 170-foot range). Similar to the AASHTO I-beams, bulb-tee beams can be modified to

accommodate longer spans. The FHWA Mid-Atlantic States Prestressed Concrete Committee for Economic Fabrication (PCEF) has developed a series of bulb-tee beams that offer a wide range of beam depths, flange widths, and web thicknesses. While AASHTO I-beams may be considered when determined to be more structurally or economically feasible, the PCEF bulb-tee beams generally provide a more economical use of materials than the AASHTO I-beams and are the preferred choice of the Department.

Refer to *Sections 330.01 – 330.04* for sections properties and details for the typical prestressed beam types used in Delaware, as listed above.

103.4.1.2.3.2 Spliced Prestressed I-Beam Superstructures

Prestressed concrete bridge beams may be spliced by joining two or more beam segments to form one beam. Typically, splicing is achieved by cast-in-place concrete along with longitudinal post-tensioning. Splicing of bridge beams is generally used for one or more of the following reasons:

1. Increasing span lengths to reduce the number of substructure units and total project costs;
2. Reducing the beam length and weight to facilitate transport from the fabricator to the bridge site;
3. Increasing the girder spacing to reduce the number of girder lines and total project costs;
4. Increasing span lengths to improve safety by eliminating shoulder piers or interior supports;
5. Minimizing structure depth to obtain required vertical clearance over highway and/or rail traffic, waterways, etc.;
6. Avoiding the placement of piers in water to reduce environmental impact and total project costs;
7. Placing piers to avoid obstacles on the ground, such as railroad tracks, roadways, and utilities;
8. Improving aesthetics through various design enhancements, such as more slender superstructures, longer spans, and haunched sections at piers; and
9. Eliminating joints for improved structural performance, reduced long-term maintenance/increased service life, and improved rideability.

When possible, the full portion of the longitudinal post-tensioning to be applied after the deck is poured shall not be applied until after the deck reaches its specified compressive strength, so that the net tension on top of the deck surface is less than or equal to the modulus of rupture.

The contract plans shall show one suggested erection method and the associated post-tensioning sequence. The structural analysis should consider the effects of fabrication and erection tolerances on bridge performance.

103.4.1.2.3.3 Segmental Concrete Structures

A segmental precast box girder superstructure may be a viable and economical alternative for the following types of structures:

1. Long Multi-Span Bridges: Segmental precast box girders are well suited for long multi-span bridges on straight or slightly curved alignments in locations where maintenance and protection of traffic issues and/or environmental concerns require that field work be minimized. Repeated use of and erection set-up for the box girder segments is the main advantage. The span-by-span method of erection is generally used for these types of bridges.

2. Long-Span Bridge on High Curvatures: Segmental precast box girders are well suited to accommodate high curvatures on long spans due to high torsional stability. The balanced cantilever method of erection is generally used for these types of bridges.

When long open spans with clean visual lines are desired, segmental precast box girder superstructures are a good solution. Haunching of the segmental girders to improve the visual impact and structural efficiency is possible with this type of superstructure.

The expected durability of segmental box girder bridges is relatively high. These types of structures utilize post-tensioning in both the longitudinal and transverse directions to be free of tensile cracks. This results in an expected substantial increase in the durability of the overall structure. However, there are unique areas of vulnerability for these types of structures:

3. Since the deck is an integral part of the box girder system, the complete replacement of the bridge deck is extremely difficult. To increase long-term durability and design life, the structure should be designed so there is no tensile stress at the top surface of the segment under service load conditions, both including and excluding time-dependent effects.

4. Deck run-off should not be allowed to flow over the grouted block-outs for tendon anchorages. When end anchorages are located in vulnerable areas, such as beneath a deck expansion joint, additional protective measures shall be provided.

103.4.1.2.3.4 Prestressed Concrete Superstructure Type Selection

The cost of the girders is a major portion of the overall cost of a bridge superstructure. Therefore, much care is warranted in the selection of the type of girders and in optimizing their position within the structure. The following guidelines should be considered:

1. Beam Type: All beams in a bridge should be the same type and size, unless approved otherwise by the Bridge Design Engineer. If vertical clearance is not a problem, a larger beam size, utilizing fewer beams lines may be a desirable solution. Fewer beam lines may result in additional reinforcement and concrete, but less forming costs.

2. Beam Concrete Strength: Higher concrete strength should be specified where that strength can be effectively used to reduce the number of beam lines. Refer to *Section 205.4.2.1 – Compressive Strength* for additional information on concrete strengths.

3. Beam Spacing: Consideration shall be given to the deck slab cantilever length to determine the most economical girder spacing. The deck slab cantilever should be maximized if a line of girders can be saved. When the amount of top transverse reinforcement in the deck overhang is controlled by vehicular collision forces on the traffic barrier, increasing the overhang width to the maximum that can be supported by the reinforcement is desirable. However, it is recommended that the overhang length, when measured from the edge of slab to the centerline of the exterior beam, be less than 40 percent of the interior beam spacing. Under this cross-sectional configuration, the design loads for the exterior and interior beams typically match well. The following guidance is suggested:

   a. Tapered Spans: On tapered roadways, the minimum number of beam lines should be established by using flared beam lines. Place as few beams as possible within the limitations of the beam capacity. Deck slab thickness may need to be increased.

   b. Curved Spans: When straight prestressed beams are used to support a curved roadway, the overhang will vary. The designer shall strive to match the maximum deck slab overhang at the centerline of the span at the outside of the curve with that of the overhang at the piers on the inside of the curve. At the point of minimum overhang, the edge of the beam top flange should be no closer than 1 foot from the deck slab edge. Where curvature is extreme, other types of girders and/or girder material should be considered. Straight beam bridges on highly curved alignments have a poor appearance and also tend to become structurally less efficient.

   c. Geometrically Complex Spans: Complex spans that are combinations of taper and curves require careful consideration to develop the most effective and economical girder arrangement. Beam lengths and number of strands (straight or draped) should be made the same for as many beams as possible within each span.

4. Deck Slab Cantilevers: Some considerations that affect deck slab cantilevers are noted below:

   a. Appearance: Normally, for best appearance, the largest deck slab overhang that is practical should be used.

   b. Economy: The condition that provides the best appearance is also that which will normally afford maximum economy. A larger overhang typically means that a line of girders can be eliminated, especially when combined with higher concrete strengths.

   c. Deck Slab Strength: The deck slab cantilever may be critical and may require thickening.

   d. Drainage: A large deck slab cantilever may severely affect where deck drainage can be placed. Therefore, when deck drainage is required, it must be considered when determining exterior beam location.

103.4.1.3 *Timber Bridges*

Existing timber bridges in Delaware include timber trusses, timber, and glulam beam structures. However, the use of similar timber bridge types for new construction should only be considered on local roads with ADT < 750 and less than 10 percent truck traffic.

103.4.1.4 *Culverts*

Culverts are typically rectangular, circular, or elliptical structures that are buried and designed when flowing full to be submerged and under hydraulic pressure. Types of culverts used in Delaware include pipes, boxes, rigid frames, and arches. DelDOT prefers pipe culverts constructed of concrete or high-density polyethylene. Metal culverts are prohibited.

Most small culverts in Delaware are constructed with round or elliptical pipes. Only culverts or a series of culverts with a total opening of 20 square feet or greater are classified as bridges in Delaware. For openings larger than 20 square feet, concrete box culverts, per ASTM C1577, rigid frames, or arches are usually preferred. Culverts of 20 square feet or greater require load ratings, as per *Section 101.5.1 – Bridge Types*. The use of concrete box culverts, or concrete arches versus larger multiple pipes is based on a number of factors, including hydraulic efficiency, compaction around the structure, height of fill required, and total width of multiple cells. No more than three adjacent pipes are permitted at a given location.

Three-sided rigid frames or arches may be considered for projects where a natural stream bottom and/or a low-flow channel are required. The bottom slab of a box culvert can also be depressed (typically 12 inches) to promote the development of a natural stream bottom. Refer to *Section 103.3.5.1 – Over Rivers, Streams, Wetlands, Floodplains* for minimum vertical clearance and vertical opening requirements for rigid frames, arches, and box culverts.

Culverts shall be designed to meet the current and future hydraulic needs as discussed in *Section 104 – Hydrology and Hydraulics*.

103.4.2 Selection of Superstructure Type

When comparing among structure alternatives, the selection of the recommended structure type for a given project shall include the following, as applicable to a given project. The relative importance of each criterion may vary among projects.

1. Least overall project cost (note that the least structure cost typically matches that of the least project cost, but other project costs, when varying among structure alternatives, should also be considered in the alternatives cost analysis)
2. Lowest life-cycle cost
3. Construction and/or construction schedule
4. Maintenance of traffic (MOT) during construction
5. Minimum number of deck joints
6. Future maintenance
7. Aesthetics and/or maintaining locally used bridge substructure types

The following provides approximate guidelines for use in the consideration and selection of appropriate structure types for a given span range.

103.4.2.1 *Spans less than 20 feet*

In this span range, precast reinforced concrete culverts or pipes, precast reinforced concrete boxes, per ASTM C1577, and prestressed solid or voided plank beam bridges are typically considered more economical structures than cast-in-place reinforced concrete box culverts and cast-in-place reinforced concrete rigid frame (RCRF) structures. Voided plank beams shall not be used over waterways that frequently flood and submerge the superstructure.

103.4.2.2 *Spans from 20 feet to 30 feet*

In this span range, arch culverts, cast-in-place concrete box culverts, prestressed solid or voided slab beam, and prestressed box beam bridges are generally more economical than steel I-beam bridges. Consideration should also be given to multiple precast reinforced concrete boxes in lieu of a single-span bridge. Physical constraints, characteristics of the project site, such as debris potential and aquatic habitat need to be considered. Voided slabs and box beams shall not be used over waterways that frequently flood and submerge the superstructure.

103.4.2.3 *Spans from 30 feet to 90 feet*

In this span range, prestressed box beam, NEXT beam, or PCEF bulb-tee beam bridges are generally more economical superstructures in comparison with steel superstructures. However, changing market conditions and bridge site conditions, such as low under-clearance, steel beam bridges in this span range may also merit consideration.

103.4.2.4 *Spans from 90 feet to 165 feet*

In this span range, prestressed box beam and PCEF bulb-tee beam bridges tend to be cost effective. The final selection should be based on the cost analysis for each bridge type for each location. Similar to the 30- to 90-foot range, given changing market conditions and bridge site conditions, multi-girder steel beam bridges may also merit consideration.

103.4.2.5 *Spans greater than 165 feet*

Bridges with span lengths over 165 feet are more complex structures. The process of selecting the most economical type of structure will require that the designer develop a preliminary design using different superstructure types, span arrangements, and substructure types. Generally, for spans up to 250 feet, multi-girder steel bridges are an economical type of bridge. Haunched steel plate girders are generally not preferred, unless unique site specific conditions, such as vertical clearance concerns, aesthetics, and/or economic considerations, render them competitive.

Consideration should also be given to long-span prestressed concrete bridges and spliced prestressed concrete girders for spans in this range.

Refer to *Section 110 – Ancillary Structures* for bridge types for consideration for spans greater than 300 feet and/or complex bridge types.

103.5 Construction

Construction issues should include, but not be limited to, future re-decking, future-widening, deck drainage, hauling restrictions (permit loads), erection weights and maintenance and protection of traffic. Each of these should be investigated to ensure constructability and to minimize or eliminate "surprises" during construction.

103.5.1 Future Re-decking Considerations

The feasibility for future re-decking of the bridge shall be established in the preliminary design phase. Requirements may include:

1. Maximum number of permissible construction stages
2. Number of required lanes
3. Minimum lane width(s)
4. Lane location limitations
5. Need to maintain pedestrian traffic
6. Minimum number of beams

The need to accommodate a future re-decking sequence can affect the number of stringers/beams required. In addition, construction joints shall be placed over stringer/beam lines; therefore, stage limits will impact location and spacing of stringers/beams. For cases where future re-decking consideration is controlling the number of stringers/beams required, or where multiple stages are required, a cross section(s) showing the re-decking sequence shall be included in the preliminary and final plans.

In addition, if the future re-decking is to be performed in stages; the loading on the structure for each stage should be investigated to determine the controlling loading condition. A temporary stage for future re-decking can control the design for a given structure layout. The appropriate load combinations shall be discussed with the Bridge Design Engineer during the preliminary design phase.

103.5.2 Consideration for Future Widening

When widening is anticipated within 10 years of completion of construction of the original design, the substructure for the widening should be included in the original design. When widening is anticipated beyond 10 years, design should facilitate splicing the rebar and adding to the substructure details.

When considering future widening, consideration of vertical clearance is important. The vertical clearance needs to be high enough on the original portion to permit adequate clearance for the widened portion, while maintaining the deck cross-slope.

103.5.3 Hauling Permits

Longer span prestressed AASHTO I-beams, prestressed PCEF bulb-tee beams and steel girders require careful consideration with regards to transportation needs and the ability to obtain hauling permits. The State of Delaware classifies a "superload" as a field section that

is at least 120 feet long or at least 15 feet wide or at least 15 feet high or over 120,000 pounds, which requires a special hauling permit. In particular, the permitting requirements and the feasibility of shipping superloads, when proposed, shall be investigated during the TS&L /preliminary planning stage and approval for their use must be obtained from the Bridge Design Engineer. Use of beams exceeding 120 feet is permitted in alternate designs by the Contractor if it is not restricted by the contract, as long as all hauling restrictions are obeyed and a hauling permit can be obtained. Refer to the most recent edition of DelDOT's *Oversize/Overweight Hauling Permit Policy and Procedures Manual* for additional information on oversized and overweight permit vehicle provisions for Delaware.

103.5.4 Maintenance of Traffic

The MOT during construction may be a significant consideration in the selection of the preferred alternative, as well as affect the cost and scope of the work. The method of MOT for a project should be determined as part of the preliminary design phase. Similarly, requirements for staged bridge construction, as applicable, may have a significant impact on controlling design cases for the superstructure and/or substructure design. In addition, pedestrian MOT should be considered where applicable. Refer to *Section 106.4.2.6 – Deck Placement Sequence* and *106.4.2.7 – Deck Overhang*s for design considerations associated with temporary load conditions, including load cases during staged construction.

Generally, maintenance and protection of traffic will be based on one or more of the following options: detour, staged construction, temporary on-site detour bridge, and new alignment, such that the existing bridge can be used to maintain traffic.

Coordination of the MOT plan with the Traffic Safety Section needs to occur early in the design process.

103.5.5 Inspectability

In addition to construction, inspectability of the structure also must be considered. Maintenance and inspection access requirements should be included in the preliminary design phase. Provisions for maintenance and inspection access should be provided for fracture-critical girders, cross-girders, and bents that cannot be inspected from a snooper. Inspection handrails, safety cables, and other fall arrest systems, all secure from trespass, should be considered in addition to catwalks.

When using concrete box or steel tub girders, inspection access shall be provided to the interior of the girders.

103.6 Substructure Type Selection

103.6.1 General Considerations

Substructure units should be optimized and standardized in shape and size to ease construction and economize quantity.

Minimizing the number of substructure units typically produces a more economical bridge, particularly where tall piers are required and where deep foundations are recommended.

Preference should be given to substructure types that eliminate deck joints within the limits of the bridge.

Special forms should be avoided unless for aesthetic or other special reasons. However, site conditions must be satisfied.

Radial supports (i.e., 90 degrees as measured from the centerline of bearing to the baseline tangent) are preferred for curved structures.

Long-term settlement and service life are to be considered in selecting the substructure type.

The effect of scour shall be considered when selecting the substructure type.

103.6.2 Abutments and Wingwalls

Abutment Types:

Type I: Semi-Integral

Type II: Conventional Reinforced Concrete Cantilever or Stub Abutment with Deck Extension Details

Type III: Conventional Reinforced Concrete Cantilever or Stub Abutment with Deck Joint on Bridge Side of Backwall

Type IV: Integral Abutment with Hinge (Consider relative to Type I if cost justification is demonstrated)

The following guidelines shall be considered in the selection and design of abutments and wingwalls:

1. A stub abutment at the top of a sloped embankment or behind a prefabricated wall is generally more economical than cast-in-place concrete walls and cantilever abutment.

2. Stub abutments can be used at the top of an embankment slope or located behind a proprietary wall. In either case, stub abutments can be founded on spread footings or piles provided adequate consideration is given to settlement. Lateral loads for stub abutments constructed in combination with proprietary walls shall be resisted by horizontal straps fastened directly to the rear face of the abutment.

3. Abutment Types I and II, as listed above, are preferable because they eliminate deck joints at the abutments.

4. Integral abutments must be supported by a single row of piles. The piles shall be oriented for bending mainly about their weak axis.

5. Construction of integral abutments involves attaching the superstructure and substructure (abutment) together and providing one of the two types of connections between the superstructure and substructure: 1. fixed against translations and rotations and 2. fixed against translation and free to allow for rotation. The longitudinal movements are accommodated by the flexibility of the abutment foundations in the longitudinal direction (capped pile abutment on single row of piles). These abutment designs are appropriate in Delaware for total bridge lengths (abutment to abutment) up to 400 feet and a maximum skew of 30 degrees. The superstructure may be structural steel, prestressed spread concrete box beam, prestressed I-beams or prestressed PCEF bulb-tee beams, or prestressed NEXT beams. Integral abutment design shall be used

where practical, with a general preference for a superstructure to substructure connection that is fixed against translation and free to allow for rotation. Integral abutments shall not be used for curved structures and at sites where there are concerns about settlement or differential settlement. Conditions shall be designed to ensure that piles are provided with a minimum unsupported length of 10 feet. The expansion and contraction movements of the bridge superstructure will be transferred to the end of the approach slabs.

6. Semi-integral abutment design is preferred to abutments with a deck joint. These abutment designs are appropriate for total bridge lengths (abutment to abutment) up to 400 feet total length. Generally, there are no skew limitations. The foundation for these designs must remain stationary. The expansion and contraction movement of the bridge superstructure is accommodated between the end of the approach slab and the roadway. This design should not be used for curved structures and at sites where there are concerns about settlement or differential settlement. Spread footings may be appropriate for semi-integral abutments but settlement should be evaluated. To utilize a semi-integral design, the geometry of the approach slab, the design of the wingwalls, and the transition parapets if any must be compatible with the movement required for the integral (beams, deck, backwall, and approach slab) connection to translate longitudinally. The expansion and contraction movements of the bridge superstructure will be transferred to the end of the approach slabs.

7. The height of reinforced concrete cantilever abutments should not exceed 25 feet, as measured from the bottom of footing or pile cap to the top of the backwall (if so equipped) or beam seat, unless otherwise approved by the Bridge Design Engineer. Wingwalls for cantilevered abutments shall be directly supported by a foundation throughout their entire length. Horizontally cantilevered wingwalls are not recommended because of the difficulty with the compacting of the fill material below the cantilevered portion of the wall. Wingwalls may either be designed as monolithic with the abutments or be separated from the abutment wall with a construction joint. Reinforcing bars shall be spaced across the joint between the wingwall and abutment wall to tie them together.

8. When a reinforced concrete cantilever abutment/retaining wall is used, shallow spread footing on rock or good founding material is usually the most economical foundation type. However, potential settlement and potential scour depth concerns may require a deep foundation.

9. When suitable rock is available at an average depth of less than 10 feet below the proposed bottom of footing, a pedestal foundation or foundation that is made possible by removal of the overburden and backfilling with lean concrete or suitable material is typically more economical than using piling or drilled shafts. For depths greater than 10 feet, the piling is usually more economical than the drilled shafts, except where “pullout” is a concern. However, in special situations (where piles cannot be driven due to site conditions), micropiles or drilled shafts may prove to be more economical.

10. Slopes at abutments and wingwalls should be maintained at 2H:1V. Steeper slopes may be utilized, but must be justified through geotechnical investigations and approved by the Bridge Design Engineer. Use random stone (rip-rap) slope protection, in lieu of

concrete slope walls. When using slopes steeper than 2H:1V, a stone rip-rap design should be considered.

11. A bench shall be provided at the top of all slopes adjacent to abutments, wingwalls, and retaining structures. The bench will provide for improved access for inspections. A 4-foot-wide bench is desirable, but the bench shall be no less than 2 feet wide. A minimum vertical clearance of 1 foot shall be provided from the top of the bench to the underside of the superstructure.

12. Where wingwalls of an abutment are at or near the water's edge, wingwalls should be flared to improve the hydraulic entrance condition. If possible, the elevation at the end of the wingwall should be higher than for the design storm or, at a minimum, the mean high water.

103.6.3 Piers

The following guidelines shall be considered for the selection and design of bridge piers:

1. For highway-grade separations, the pier type should generally be cap-and-column piers supported on a minimum of three columns (multi-column bent). Note that this requirement may be waived for temporary construction conditions that require caps supported on less than three columns. Typically, the columns are circular and the pier cap ends should be cantilevered and have rounded ends.

2. For cap-and-column piers to be generally cost effective, the column height should be less than 30 feet with column spacing between 15 and 20 feet.

3. For cap-and-column piers, continuous, isolated or pile/drilled shaft foundations may be specified. The engineer should determine estimated costs for all foundation configurations and choose the most economical. Where the clear distance between isolated footings is less than 4 feet 6 inches, a continuous footing shall be specified.

4. On wide structures with more than five columns and/or cap lengths greater than 80 feet, the engineer should consider whether to split a cap-and-column pier into two piers, especially where columns are short and contraction/expansion of the pier cap results in large internal forces. For cap-and-column piers with more than six columns and/or cap lengths greater than 100 feet, two piers are required. Consideration should also be given to limiting the skew with respect to flow for wide piers to reduce scour effects.

5. Where cap-and-column piers are used, the potential for vehicular collision should be evaluated, and when deemed necessary, crash-wall type or partial-height solid wall piers should be used.

6. For tall piers over 50 feet in height, two-column bents tend to be more economically feasible than cap-and-column piers. For piers over 75 feet in height, single-column bents (hammerhead) tend to be the most cost-effective pier type, as a rule of thumb. For tall piers or for piers that will be costly for other reasons, such as access (e.g., water, rail, traffic control) or unique foundation issues, reduction in the number of piers (i.e., longer spans) should be considered to achieve the least overall cost of the structure.

7. For bridges over railroads, solid-wall type piers are preferred. Protective pier crash-walls should be considered and designed in accordance with AREMA specifications.

8. For bridges over waterways, the following pier types should be considered:

   a. Pile bents: The unsupported pile length should generally be limited to a length of 20 feet. The engineer should investigate both the existing ground and scoured condition when determining the unsupported length, as the assumed point of fixity for the piles can vary substantially.

   b. Hammer-head piers

   c. Solid wall piers: When using wall piers in waterways, the potential for channel migration should be considered.

   d. Cap-and-column pier: For this pier type, the engineer must consider the potential for increased scour associated with vortexes forming around columns. Designers may consider the construction of a solid wall section with columns constructed above the water line.

9. Note that the use of hammer-head type piers, or other pier types with large overhangs, inhibits the removal of debris at the pier face from the bridge deck. For low stream crossings with debris flow problems and where access to the piers from the stream is limited, hammer-head type piers, or other similar pier types, should not be used.

10. Piers within navigable waters should be solid to a height of 3 feet above maximum navigable elevation or 2 feet above the 100-year flood or flood of record, whichever is higher. If the remaining height of pier above the solid stem is 16 feet or less, piers should be made completely solid.

11. The upstream face of water piers should be rounded or V-shaped to improve hydraulics. If debris and/or ice is a problem, the upstream face should be battered 15 degrees and armored with a steel angle to a point 3 feet above the design high water elevation. This allows the debris to ride up the pier face.

12. For unusual conditions, other pier types may be acceptable. In the design of piers that are readily visible to the public, aesthetics should be considered if it does not add appreciably to the cost of the pier.

103.7 Retaining Walls

103.7.1 Wall Types

The following are some commonly used types of retaining wall structures available for the designer to consider in a specific design: post and plank, sheet pile (either cantilevered or anchored), reinforced cast-in-place concrete, soil-nail walls, mechanically stabilized earth (MSE), and proprietary retaining walls.

103.7.1.1 *Post and Plank Walls*

Post and plank walls shall consist of steel H-piles driven or augured at designated spacing. The piles may be anchored using tie-back type anchors. The spaces between the piles are

spanned with structural elements, such as wood (typically only for temporary structures), reinforced concrete, precast or cast-in-place concrete lagging, or steel members, to retain the soil.

103.7.1.2 *Sheet Pile Walls*

Sheet piling walls may be either exposed cantilever or anchored design. Sheet piling is driven in a continuous line to form a wall. Exposed cantilever walls shall be limited to 15 feet in height. In anchored design, deadmen or tie-backs are used to support the wall. The top of a permanent steel sheet pile wall must be constructed with a concrete cap so that the top of the sheeting is not exposed.

Steel sheet pile retaining walls are used as sea walls and for similar types of shore protection, such as flood walls, levees, and dike walls used to reclaim lowlands. If driven sheet pile walls are constructed as part of an abutment, the steel sheeting shall not be used as a support for the bridge vertical loads. Refer to the United States Steel (USS) *Sheet Piling Design Manual* (1984) for further information.

Concrete sheet piles are precast, prestressed concrete members designed to carry vertical and lateral earth pressure loads. These members shall be connected by a keyed vertical joint between two adjacent sheets. Geotextile fabric or suitable joint sealer is used to prevent loss of backfill material through these joints. The sheets are driven to ultimate bearing capacity using water jets, except the last 12 to 15 feet are driven using a suitable hammer. The use of concrete sheet piles is permissible in sandy soils only with approval of the Bridge Design Engineer.

103.7.1.3 *Reinforced Concrete Walls*

Reinforced concrete gravity or cantilever walls may be constructed using cast-in-place or precast concrete elements. They may be constructed on spread footings or footings on piles. They derive their capacity through combinations of self-weight, backfill, and structural resistance.

103.7.1.4 *Anchored Walls*

Anchored walls may be considered for both temporary and permanent support of stable and unstable soil and rock masses. Depending on soil conditions, anchors may be used to support both temporary and permanent non-gravity cantilevered walls higher than 15 feet.

The availability or ability to obtain underground easements and proximity of buried facilities to anchor locations shall be considered by the engineer when assessing the feasibility of anchored walls.

103.7.1.5 *Proprietary Retaining Walls*

In locations where retaining walls are needed to reduce span lengths or facilitate construction, proprietary walls may be considered. Economics, location, construction requirements, and aesthetics should be considered in the evaluation. These walls have proprietary patented systems for retaining soil. Two types of systems used in Delaware are gravity and mechanically stabilized. Gravity walls generally use interlocking, soil-filled reinforced concrete bins or modular blocks to resist earth and water pressures; they depend

on dead load for their capacity. Mechanically stabilized walls use metallic or polymeric tensile reinforcement in the soil mass and modular precast concrete panels to retain the soil.

This type of construction can also reduce span lengths, thus saving on superstructure construction costs. Proprietary retaining walls can be economical where high wall heights are dictated by field conditions.

Locations where proprietary walls should be considered are based on the following requirements: readily available acceptable backfill material, available site working area, insufficient right-of-way for embankments or construction of alternative wall types, and fill conditions.

Each design location must be evaluated based on the advantages and disadvantages of the specific construction being considered. This is particularly important when a mechanically stabilized wall is being considered for a roadway crossing over a waterway. Close consideration must be given to long-term stability, stream flow, and storm flows. Positive erosion control, such as rip-rap placement, in addition to geotechnical fabric, shall be provided as deemed necessary. These walls should not be used in tidal areas or other locations where water might reach the wall.

Refer to the list of approved proprietary wall types in the Standard Specifications.

103.8 Bridge Rehabilitation versus Replacement Selection Guidelines

Several factors must be considered in decisions involving rehabilitation versus replacement. Each factor must be investigated and considered separately and collectively. The most common factors are noted below. LRFD design methodology should be used for all structure comparisions.

103.8.1 Cost

The estimating of both rehabilitation and replacement costs is usually performed after all other factors have been evaluated because the other factors may affect the scope of the rehabilitation or replacement option. The replacement estimate is to be done in accordance with procedures outlined in this Manual for new bridges.

When considering rehabilitation, the first step is to check the load rating. If the bridge is posted or if the current load rating appears suspect, rerate the bridge before proceeding with the estimate. A rehabilitation estimate is more difficult to develop as it cannot be developed from the biennial inspection report. It requires close inspection and examination of the bridge. This inspection must be of sufficient detail to develop a practical idea of the extent of the necessary work. The inspector should keep in mind that the actual rehabilitation work will most likely not be done for several years. Consequently, the estimate of quantities should have reasonable projections to compensate for continued deterioration. The BMS contains historical data for deterioration rates.

Like the replacement estimate, the bridge rehabilitation estimate should include highway and project costs necessary to provide a fair, relative cost comparison.

For comparison of rehabilitation versus replacement, cost estimates should be performed using LCCA. Refer to FHWA publication *Life-Cycle Cost Analysis Primer* (2002) available from

the Office of Asset Management for more information (http://www.fhwa.dot.gov/infrastructure/asstmgmt/lcca.cfm). For the purposes of these guidelines, "user costs" are not included in the total costs associated with rehabilitation or replacement because, in both cases, traffic is usually restored to the same level of service that existed before construction. It may be necessary to take user costs into account on bridge removal and bridge capacity improvement projects because there would be a change that would affect the traveling public on a permanent basis. Therefore, user costs should be considered on an individual project basis and usually significant in only a small percentage of cases.

The next step is to compare rehabilitation and replacement costs related to the bridge assuming both alternatives are viable possibilities. The comparison should be based on life-cycle costs developed for each alternative. This relationship should be established in terms of the rehabilitation cost being a percentage of the replacement cost (RH/RP). Given the inherent uncertainties of estimating, relative costs may generally be separated into three ranges.

1. RH/RP < 65%. The preliminary choice is rehabilitation.
2. 65% < RH/RP < 85%. Rehabilitation or replacement may be the preliminary choice.
3. RH/RP > 85%. The preliminary choice is replacement.

For all three ranges, other factors must be examined for compatibility with the rehabilitation or replacement selection. For example, detouring traffic in highly urbanized areas may not be feasible from a capacity point of view and constructing a temporary structure may not be possible from a right-of-way point of view. Construction of a replacement bridge alongside the existing bridge may not be possible due to right-of-way restrictions, even with staged construction.

103.8.2 Safety

Crash history and potential should be examined for the project bridge, with crash history being the more important of the two. Crash history can be determined by examining the crash reports on file, which are available upon request from the Traffic Safety Section. The review should look for trends in crash patterns that would point to whether the bridge caused or contributed to the crashes. Geometrics that contain clear potential for crash problems should also be considered for improvement. The review of geometrics should include, but not be limited to, sight distance, bridge width, horizontal clearances, and alignments. These elements should be compared to the standards and evaluated with regard to crash potential.

If either the crash history or crash potential indicates the bridge geometrics are unacceptable, the safety problem must be addressed by either widening the structure under rehabilitation or replacing the existing bridge with a wider structure.

103.8.3 Bridge Type

Some bridges, by their very type, will indicate a probable rehabilitation or replacement selection. For example, the Department gives special attention to non-redundant bridges where failure of one primary member would result in collapse or an unserviceable condition of the bridge. This factor includes a review of the sensitivity to being non-redundant, the

consequences of no action, and the possibility of adding redundancy to the bridge. The rehabilitation versus replacement decision should take into account the redundancy of the bridge. Non-redundancy should be a factor in favor of replacement.

The type of construction of some bridges makes replacement a better choice than rehabilitation. For example, concrete arches and rigid frames are difficult and expensive to rehabilitate because of their monolithic construction. Past rehabilitation work on these types of bridges has been costly, so they are generally not rehabilitated. Also, because of their endurance, letting the life of these bridges simply expire is often more cost effective. However, considerations for historical needs may override economic feasibility associated with rehabilitation versus replacement decisions.

Another example is existing substructure foundations without piles that exhibit scour problems. This condition may push the decision toward replacement.

Constructability must be considered when deciding to rehabilitate or replace. The environment around the bridge may have changed dramatically since it was first constructed. The presence of critical utilities, right-of-way restrictions, adjacent infrastructure, and site access should be considered.

103.8.4 Bridge Standards

When any bridge is considered for rehabilitation, it should be reviewed for compliance with current standards. Existing vertical clearance, horizontal clearance, load capacity, freeboard, seismic capacity, lane width, and shoulder width should be compared to current standards. The hydraulic history of the bridge should also be reviewed. If the existing features are nonstandard, consideration should be given to improving them under rehabilitation or by replacing the bridge. If improvements cannot be made or only substandard improvements are possible, a nonstandard feature justification will be required. Refer to the *Road Design Manual* for further information on justification of design exceptions.

103.8.5 Feature Crossed

The feature crossed can have a significant effect on the type of work chosen and its cost. As an example, environmental concerns may push the rehabilitation versus replacement decision in the direction of rehabilitation, while hydraulic inadequacies and poor stream alignment may push the decision toward replacement.

103.8.6 Comprehensive Assessment of Rehabilitation versus Replacement

Other considerations in the rehabilitation versus replacement decision may have little to do with the structural adequacy, functionality, or safety associated with the structure. These considerations may include historical, social, political, utilities, and environmental considerations. These considerations can influence the rehabilitation versus replacement decision on individual bridge projects. They are difficult to categorize into specific indicators that trigger a particular decision; consequently, they have not been included in Table 103-2. When these or any other considerations surface on a project, they should be treated as additional subjective factors and given the weight they deserve.

There may be additional factors on a specific bridge, such as the functional importance of the bridge and how important the bridge is to the overall transportation system of the area.

Because many factors involve subjectivity, the people and agencies involved may reach different conclusions. This can present an opportunity to discuss differing viewpoints and gain the knowledge and experience of others. All conclusions drawn in the replacement versus rehabilitation discussion process must be fully documented in the TS&L Report.

Table 103-2. Bridge Rehabilitation (RH) vs Replacement (RP) Worksheet1

Factor	Step	Review	Preliminary Direction
Cost	A	Is the rehabilitation cost < 0.65 of the replacement cost?	Yes .....RH No .....Proceed to step B
	B	Is the rehabilitation cost between 0.65 and 0.85 of the replacement cost?	Yes .....Consider other factors No .....Proceed to step C
	C	Is the rehabilitation cost > 0.85 of the replacement cost?	Yes .....RP
Safety	A	Are there accidents attributable to the bridge geometry or highway approach geometry?	Yes .....Proceed to step B No .....RP or RH
	B	If there were accidents, were there any fatalities or is the number of accidents above the statewide average?	Yes .....,,RP or RH with corrections to the safety problem No .....RP or RH
	C	Is there an accident potential? (highway, waterway, or railroad)	Yes .....RP or RH with corrections to accident potential problems No .....RP or RH
Bridge Type	A	Is the bridge nonredundant?	Yes.....RP or RH, including adding redundancy No .....RP or RH
	B	Does the bridge have fatigue sensitive details?	Yes .....RP or RH removing or modifying critical details No .....RP or RH
	C	Is the bridge concrete arch, concrete rigid frame, etc.?	Yes .....RP No .....RP or RH
Standards	A	Does existing bridge conform to all current standards?	Yes .....RP or RH No .....Proceed to step B
	B	Can bridge be rehabilitated and brought up to standards?	Yes .....Bridge may be RH'ed No .....Bridge should be RP'ed
	C	Can the nonstandard feature be justified?	Yes .....Bridge may be RH'ed No .....Bridge should be RP'ed
Feature Crossed	A	If existing bridge is over water, have there been hydraulic problems indicating an inadequate opening or poor stream alignment that would require a span adjustment?	Yes.....RP No .....RP or RH
	B	Does existing bridge span have anything that requires special treatment or have special conditions associated with it such as railroad, or is historically, environmentally or politically sensitive?	Yes.....RP or RH* No .....RP or RH *The sensitive feature must be thoroughly examined and considered in RH/RP analysis with special attention to the cost necessary to accommodate the sensitivity.

TABLE 103-2. BRIDGE REHABILIATION (RH) VS REPLACEMENT (RP) WORKSHEET1 (CONTINUED)			
Factor	Step	Review	Preliminary Direction
MOT	A	Can traffic be detoured off the project site?	Yes .....RP or RH No .....Proceed to step B
	B	Can traffic be maintained on the existing bridge with a new bridge built alongside?	Yes .....RP No .....Proceed to step C
	C	Can construction be staged?	Yes .....RP or RH No .....Proceed to step D
	D	Can a temporary structure be used on the project site?	Yes .....RP or RH No. **STOP**. All traffic strategies have been rejected.
MOT = maintenance of traffic RH = rehabilitate RP = replace			

103.9 Accelerated Bridge Construction

ABC is construction that utilizes innovative planning, design, materials, and construction methods in a safe and cost-effective manner to reduce the on-site construction time of bridge projects. These innovative techniques include PBES, bridge movement methods and equipment to set into place complete substructures and superstructures built at offsite locations, and fast-track contracting procedures to rapidly replace or rehabilitate a highway bridge structure. The use of ABC techniques can improve worker and motorist safety, improve material quality and constructability, reduce right-of-way and environmental impacts, and minimize traffic disruption and cost, and should be investigated where appropriate following the guidelines contained herein.

Design and construction guidance for ABC technologies and components shall be in accordance with AASHTO LRFD, as modified by this Manual. As the number of bridges constructed with ABC increases, innovation in the field will continue to grow and develop. As such, many ABC technologies are new and untested, and their use shall be coordinated closely with DelDOT. Because of the relative newness of some ABC technologies, the bridge designer shall consider incorporating long-term performance provisions when implementing ABC into projects. These provisions may include but are not limited to: additional concrete cover, high-performance concrete, corrosion-resistant rebar, and concrete sealers. Information on the subject of ABC and PBES can be found in the following FHWA references:

1. *Accelerated Bridge Construction – Experience in Design, Fabrication and Erection of Prefabricated Bridge Elements and Systems* (2011 edition; abbreviated as FHWA ABC herein).

2. *Decision-Making Framework for Prefabricated Bridge Elements and Systems*, Publication Number FHWA-HIF-06-030 (2006; abbreviated as FHWA Decision-Making herein).

3. *Manual on the Use of Self-Propelled Modular Transporters to Remove and Replace Bridges*, Publication Number FHWA-HIF-07-022 (2007).

4. *Connection Details for Prefabricated Bridge Elements and Systems*, Publication Number FHWA-IF-09-010 (2009).

103.9.1 Decision-Making/Planning Process

Except for emergency projects (*Section 103.9.1.3 – Emergency Projects*), the typical approach to evaluating projects is multi-phased. It involves a concept team consisting of DelDOT representatives and/or other key stakeholders. FHWA Decision-Making provides a guide for the concept team to select viable ABC alternatives early in the process and determine their potential benefits over conventional methods.

All bridge projects are eligible for ABC techniques, and more than one ABC technology is typically feasible at a site. Therefore, prior to implementing these techniques, it is important that all ABC technologies be thoroughly weighed in the concept phase of the project.

The concept team will prioritize the list of ABC candidates once the evaluation process is complete based on scheduling issues and funding. If one or more alternatives are accepted, then the project-specific ABC technique(s) will be further developed in a TS&L plan by the bridge designer in accordance with *Section 102 – Bridge Design Submission Requirements*. The contractor has the option to submit alternative details to those developed by the designer; the alternative details must be stamped by a Delaware Professional Engineer, and the shop drawings must be approved by the Bridge Design Engineer.

If additional evaluation is desired, the decision-making process can be supplemented by the following FHWA-endorsed tools: **ABC Rating Score**, FHWA *ABC* Section 3.2.2 – **Decision Flowcharts**, and the **ABC AHP** decision-making software tool. The results of these tools aid the team in prioritizing ABC techniques.

103.9.1.1 *ABC Rating Score*

The applicability of ABC to a bridge construction project can be initially assessed by its **ABC Rating Score**. This rating system helps to determine which construction projects are more suited to ABC methods than conventional methods. The factors considered include ADT, delay/detour time, bridge classification (normal, essential, or critical), road user costs, economy of scale (number of spans), use of typical details, safety, and railroad impacts. These factors are then individually weighted to reflect their relative impact on the construction and project planning process. Note that DelDOT Design Guidance Memorandum No. 1-24, *Road User Cost Analysis* (DelDOT DGM 1-24) can be consulted for guidance on calculating user cost for road construction projects.

The rating system yields a weighted score out of 100. Bridges with scores exceeding 50 are eligible for use of ABC technologies. Bridges with scores below the threshold can be further evaluated as required; unique circumstances not addressed in the rating, such as environmental impacts may enter the discussion at this time. However, bridges with an ABC rating score below 50 are typically relegated to conventional construction methods.

103.9.1.2 *FHWA Decision Flowcharts / ABC AHP Software Tool*

Bridges deemed eligible for ABC methods by its rating score can then be further evaluated by a more refined, project-specific approach. Two commonly accepted approaches are the FHWA **Decision Flowcharts** for Determination of Appropriate ABC Methods and **ABC AHP**. The former

qualitatively investigates the most suitable ABC method for a particular site by maneuvering through a series of flowcharts. The latter is a software package endorsed by FHWA that quantitatively analyzes various construction alternatives based on user-selected criteria. In both methods, general ABC concepts are compared against conventional construction methods.

The five major criteria on which the flowcharts and the AHP software are based are **direct costs**, **indirect costs**, **schedule constraints**, **site constraints**, and **customer service**. Each criterion is briefly summarized below.

1. Direct costs of an ABC project include, but are not limited to, construction costs with consideration to new construction method premiums, MOT costs, right-of-way costs, engineering design fees, and inspection and maintenance costs. Typically, the immediate construction costs are greater for ABC approaches than conventional construction approaches, but the accelerated construction practices can ultimately reduce the overall costs.

2. Indirect costs on an ABC project are incurred by factors such as road user delay, freight mobility with consideration to reduced speeds on detour routes, revenue loss of local businesses, living conditions of neighboring communities such as noise and air quality, and safety risk for workers and motorists. DelDOT DGM 1-24 can be consulted to quantify the effects of road user delay.

3. Schedule constraints to an ABC project include, but are not limited to, weather impacts, compliance requirements to marine and wildlife regulations, and resource availability, such as design and construction labor.

4. Site constraints can affect the bridge type and configuration, which in turn can affect the economics of the construction project. Right-of-way limitations, geotechnical considerations, staging yard availability, horizontal and vertical clearances, environmental impacts, historical regulations, utilities on the project site, and archaeological regulations can all affect cost.

5. Public perception, public relations, and their associated costs are considered in the customer service criterion. These factors are often dictated by local government.

Each criteria listed is evaluated in some capacity by the two alternatives defined above. Because of the breadth of criteria considered, the concept team should assemble a diverse range of expertise to manage and assist in the evaluation process.

103.9.1.3 *Emergency Projects*

Emergency repair or replacement projects are typically the result of extreme events, such as flood damage, fire, roadway vehicle impact, and waterway vessel collision. The goal for any emergency project is to quickly restore the affected portion of the transportation network back to full capacity, regardless of the cause.

Because of the immediate need imposed by an emergency, the decision-making process tools outlined above are not often utilized in these situations. Large-scale or uncommon emergencies may require an emergency response team to be assembled from DelDOT officials, design consultants, and contractors. The response team will quickly make planning

and design decisions with the primary focus on public safety and mitigation of traffic disruption.

To expedite the planning, design, and construction processes, a thorough damage assessment must be determined quickly to establish a scope for the project. Using established contracting methods will speed up the negotiating and design components of the project. Providing the required construction equipment and manpower, establishing detour routes, and making these routes public knowledge promptly will minimize losses and ease traffic congestion.

103.9.1.4 *Repair and Rehabilitation Projects*

In principle, projects that involve deck or superstructure replacement could be constructed with ABC techniques much in the same way that bridge replacement projects are handled. Other projects affecting traffic flow, such as approach slab replacements, deck overlays, joint repairs, and other bridge repairs could also be accelerated. Projects of these types will be addressed by the concept team on a case-by-case basis in a similar fashion as that outlined in *Section 103.9.1 – Decision-Making/Planning Process*.

103.9.2 ABC Methods/Techniques

FHWA ABC sorts the abundance of available ABC technologies into five distinct categories: **foundation and wall elements, rapid embankment construction, PBES, structural placement methods**, and **fast-track contracting**. The first four components focus primarily on methods designed to expedite the on-site construction process; the fifth component is aimed to expedite the project delivery through use of innovative contracting methods.

The following subsections are intended to highlight the technologies prevalently used in Delaware, as well as list those untried technologies that are viewed as attractive alternatives for future use. Refer to FHWA ABC and AASHTO LRFD as modified by this Manual for information not provided on the design and construction of the outlined technologies.

103.9.2.1 *Foundation and Wall Elements*

Innovative foundation materials and construction methods in the realm of ABC are commonly used in the United States. Some of the most popular are listed below:

1. Continuous flight auger piles
2. GRS/IBS
3. Prefabricated pier cofferdams
4. MSE retaining walls
5. Precast pile bents
6. Precast abutments

103.9.2.2 *Rapid Embankment Construction*

Several techniques are used in the United States to rapidly and more efficiently construct embankments; the most widely used are listed below:

1. Expanded polystyrene (EPS) geofoam
2. Accelerated embankment preload techniques
3. Column-supported embankment technique
4. Flowable fill

103.9.2.3 *Prefabricated Bridge Elements and Systems*

The most common form of ABC involves connecting prefabricated elements at the site to form a bridge. FHWA ABC summarizes the available ABC technologies into four main categories: materials, superstructure elements, substructure elements, and foundations.

As previously stated, the intent of the following lists is to highlight the technologies that have potential for widespread use in Delaware. The following is not meant to be an exhaustive list, but covers some of the more common ABC elements and systems. Use of ABC is highly encouraged when applicable; as such, all technologies outlined herein and in FHWA ABC are acceptable for consideration during the concept phase of the project pending the approval of DelDOT.

1. Materials
    a. Ultra-high performance concrete (UHPC): This proprietary product is capable of achieving very high flexural strengths and ductility. The material has shown great promise for several applications, including closure pours between adjacent elements and connections between precast deck panels. Despite being a costly material, UHPC has high potential for use in ABC and has already been successfully implemented on projects across the country.
2. Superstructure elements
    a. Prefabricated and precast beam and girders, including NEXT beam bridges
    b. Stay-in-place deck forming, including partial-depth, precast concrete deck panels
    c. Full-depth deck panels, including precast deck panels, steel grid deck (*Section 109.4 – Steel Grid Decks*), and orthotropic steel deck
    d. Modular superstructure systems: Modular systems are gaining popularity in the ABC market. Some common modular systems include topped multi-steel beam units, orthotropic deck systems, and precast concrete systems, such as double tees, bulb-tees, and segmental construction. Accelerated construction is achieved because the decking surface is connected to the beams and girders during fabrication. These prefabricated elements are often connected by UHPC closure pours (see "Materials" section) and erected using ABC large-scale placement methods (*Section 103.9.2.4 – Structural Placement Methods*).
3. Substructure elements (in conjunction with *Section 103.9.2.1 – Foundation and Wall Elements*)
    a. Precast concrete open-frame piers and pier walls

b. Prefabricated cantilever, spill-through, integral, and semi-integral abutments (not as common as prefabricated piers)

c. GRS/IBS

d. Prefabricated retaining walls, such as MSE walls

e. Modular culvert and arch systems

4. Foundations (in conjunction with *Section 103.9.2.1 – Foundation and Wall Elements*)

a. Pile bents with precast concrete piles for smaller spans

b. Precast concrete spread footings

c. Precast pier box cofferdams

Note that with all prefabricated systems there should be a huge emphasis on the field connections between elements. Fabrication specifications and connection details shall be in accordance with the references provided in *Section 103.9 – Accelerated Bridge Construction*.

103.9.2.4 *Structural Placement Methods*

ABC not only involves materials and prefabricated elements, but also rapid large-scale movement techniques of structural systems and even complete bridges. The most common placement practices are achieved by one of the following:

1. SPMT
2. Longitudinal launching
3. Horizontal skidding or sliding
4. Other heavy lifting equipment and methods, including pipe and culvert jacking, strand jacks, climbing jacks, pivoting, and gantry cranes

103.9.2.5 *Fast-Track Contracting*

Innovative contracting methods are often used to expedite the project, both in terms of in-field construction time and planning/design time. Traditional design-bid-build methods require design and construction to take place sequentially. ABC accelerated project delivery (APD) methods generally allow design and construction to take place concurrently, thereby requiring less time to complete a project. Under APD methods, the early involvement of contractors encourages the use of ABC construction techniques. APD methods are usually achieved by using one of the three methods below:

1. Design-Build
2. Partial Design-Build
3. Construction Manager / General Contractor

In conjunction with the delivery methods, a variety of contracting provisions are often used on ABC projects to place emphasis on the need to complete the project quickly. These are listed below:

a. Best value selection

b. A+B and A+B+C bidding

c. Continuity of the construction process

d. Incentive/disincentive clauses

e. Warranties

f. Lane rental

Alternative procurement methods often require legislative approval prior to use on any project.

103.10 Requirements for the Design of Highway Bridges over Railroads

Coordination with the owner of the railroad is required for all projects over, under, or adjacent to a railroad. Regular communication with the railroad is needed throughout the entire project development process to ensure time-sensitive approval from the railroad.

Refer to *Sections 103.3.4.3 – Over Railroads* and *103.3.5.3 – Over Railroads* for horizontal and vertical clearance requirements adjacent to and above railroads. Refer to *Section 103.3.4.3 – Over Railroads* for crash wall requirements for bridge piers constructed adjacent to the railroad.

Care must be taken to ensure that survey data of rails are accurate. The top of rail must be properly surveyed in order to accurately calculate the vertical clearance of highway bridges over railroads. Survey shots shall be taken on both rails at spacing not to exceed 25 feet in the area under the bridge. The surveyor shall take three shots at each location, one on the top of the rail and one at the tie on both sides of the rail so that the engineer is certain he has a shot on the top of the rail. A pre-survey field meeting should take place between the designer and survey group. Additional survey shall be taken to double check against the original survey immediately prior to start of construction. This is to safeguard the Department from errors and/or differences in rail elevations due to survey errors or when the owner of the railroad re-tracks the rails during the design phase. A check for clearance shall also be performed after the beams are set. This check shall take into account the expected loss of camber due to the application of all dead loads.

Where a drainage ditch is to be provided parallel to the track, the elevation of the top of footing adjacent to track shall be at least 3 feet 6 inches below the elevation of the top of rail, unless rock is encountered. The edge of the footing shall be at least 7 feet from the centerline of adjacent track.

Bridge scuppers shall not drain onto railroad tracks or ballast. Provisions shall be made to direct surface water from the bridge area into an adequate drainage facility away from the railroad track and will require railroad approval.

Safety provisions required during excavation in the vicinity of railroad tracks and substructures shall be in accordance with a special provision for the maintenance and protection of railroad traffic. Sheet piling walls or other approved support systems, as required for excavation support for the protection of railroad tracks and substructure, shall be designed according to AREMA specifications and shall be subject to approval by the railroad company.

Complete details of temporary track(s) or a temporary railroad bridge to be constructed by the contractor shall be shown on the design drawings, if applicable. Applicable railroad design standards or design drawings shall be referred to or duplicated on the design drawings.

For NHS structures crossing over railroads, protective screening/fencing shall be provided per the railroad's requirements (e.g., both sides, sidewalk only) for the portion of the structure (spans) over the railroad. For non-NHS structures with sidewalks, the protective fencing shall be provided only on the sidewalk side of the structure, for the portion of the structure (spans) over the railroad. For non-NHS structures crossing over railroads where protective fencing is not required by Department criteria, the railroad may request the installation of the protective fence for the portion of the structure (spans) over the railroad, if the railroad agrees to reimburse the Department for the installation of the protective fence.

For electrified railroad tracks, these additional requirements apply:

1. If a railroad is electrified, the preliminary plans submitted for TS&L approval should note that.

2. A protective barrier shall be provided on spans or on part of spans for structures over electrified railroads, as directed by the railroad company. The protective barrier shall extend at least 10 feet beyond the point at which any electrified railroad wire passes under the bridge. However, in no case shall the end of the protective barrier be less than 10 feet from the wire measured in a horizontal plane and normal to the wire outside of the limit of the bridge, and less than 6 feet from the wire within the limit of the bridge. Refer to *Section 325.02 – Bridge Railing Details* for protective barrier details.

3. All open or expansion joints in the concrete portion of barriers, divisors, sidewalks, and curbs within the limits of the barrier shall be covered or closed with joint materials. Details of such joints shall be shown on the design drawings.

4. The details of catenary attachments and their locations, if attached or pertinent to the structure, shall be shown on the plans. Consideration shall be given to realign the catenary by installing support columns on each side of the bridge to avoid catenary attachments to the bridge. Normally, ground cable attachments, cables, and miscellaneous materials are supplied by the contractor and are installed by the railroad. The Plans shall show a separate block identifying the materials required, a description of materials, the railroad reference number for materials, and the party responsible for providing or installing materials. Approval of grounding plans shall be obtained from the railroad concurrently with approval of the structure drawings.

103.11 References

AASHTO, 2011. *A Policy on Geometric Design of Highways and Streets*, 6th Edition.

AASHTO, 2011. *Roadside Design Guide,* 4th Edition.

AASHTO, 2014. *AASHTO LRFD Bridge Design Specifications*, 7th Edition.

AREMA, 2015. *Manual for Railway Engineering*.

DelDOT, 2015. *Standard Specifications for Road and Bridge Construction,* December.

DelDOT, 2004. *Road Design Manual*, January.

DelDOT, 2015. *Oversize/Overweight Hauling Permit Policy and Procedures Manual*, October.

DelDOT, 2010. Design Guidance Memorandum No. 1-24, *Road User Cost Analysis,* April.

FHWA, 1993. HEC-21, *Design of Bridge Deck Drainage*, May.

FHWA, 2002. *Life-Cycle Cost Analysis Primer*, Office of Asset Management, August.

FHWA, 2006. *Decision-Making Framework for Prefabricated Bridge Elements and Systems* Publication Number FHWA-HIF-06-030.

FHWA, 2007. *Manual on the Use of Self-Propelled Modular Transporters to Remove and Replace Bridges*, Publication Number FHWA-HIF-07-022.

FHWA, 2009. *Connection Details for Prefabricated Bridge Elements and Systems*, Publication Number FHWA-IF-09-010.

FHWA, 2009. HEC-22, *Urban Drainage Design Manual*, 3rd Edition, Publication No. FHWA-NHI-10-009, September.

FHWA, 2011. *Accelerated Bridge Construction – Experience in Design, Fabrication and Erection of Prefabricated Bridge Elements and Systems*.

FHWA, 2014. *Specification for the National Bridge Inventory Bridge Elements*, January 21.

NCHRP, 2012. NCHRP Report 725 – *Guidelines for Analysis Methods and Construction Engineering of Curved and Skewed Steel Girder Bridges*, Transportation Research Board.

PCI, 2011. *Bridge Design Manual*, 3rd Edition, November.

USS, 1984. *Sheet Piling Design Manual*.

Section 104
Hydrology and Hydraulics

104.1 Introduction

The primary objective in the design of a highway stream crossing is to avoid causing interruption of the traffic using the bridge or crossing and changes in the behavior of the stream. Other objectives of a hydraulic design are to determine the backwater and hydraulic capacity of the bridge or culvert; to identify the stream forces that may cause damage to the bridge, culvert or roadway system; and to provide a safe level of service acceptable to the traveling public without causing unreasonable effects on adjacent property or the environment.

104.1.1 Terms

ATON – Aids to Navigation

CBF – Channel bed fill

HEC-HMS – U.S. Army Corps of Engineers (USACE) Hydrologic Engineering Center (HEC) Hydrologic Modeling System

HEC-RAS – USACE HEC River Analysis System

HFAWG – Hydrologic Frequency Analysis Work Group

HY-8 – FHWA Culvert Hydraulics Computer Program

LiDAR – Light Detection and Ranging remote sensing method

NAVD 88 – North American Vertical Datum of 1988

PDM – DelDOT's *Project Development Manual* (PDM; 2015)

PeakFQ – U. S. Geological Survey (USGS) computer program to estimate magnitude and frequency of floods

StreamStats – USGS web-based geographic information system (GIS) that provides analytical tools that are useful for engineering design applications, such as the design of bridges

TR-20 – Natural Resources Conservation Service's (NRCS's) hydrologic computer program

TR-55 and WinTR-55 – NRCS's hydrologic method and computer program, respectively

UDC – New Castle County Unified Development Code

WATSTORE – National Water Data Storage and Retrieval System of the USGS

104.1.2 Coordination

Consideration of the effects of constructing a bridge or culvert across a waterway is key to ensuring the long-term stability of the structure. Confining the floodwater may cause excessive backwater or overtopping of the roadway, may impact structural stability when the water is impacting the superstructure of the bridge (i.e., causing a pressure flow situation), or may induce excessive scour. These effects may result in damage to upstream land and improvements or endanger the bridge. Conversely, an excessively long bridge does not create a backwater or any attenuation and may cost far more than can be justified by the benefits obtained. Somewhere between these extremes is the design that will be the most economical to the public over a long period of time, yet remain safe and stable during large storm events.

Standard DelDOT QA/QC procedures will be followed for development and review of hydrology and hydraulics submittals.

104.1.3 Design Responsibilities

Responsibilities for hydraulic design are divided between the Bridge Design Section and the Project Development Sections based primarily on the size of the drainage area. Bridge Design is responsible for all watersheds equal to or over 300 acres and existing structures with openings (bridge, culvert, pipes) that exceed 20 square feet. The Project Development Section is responsible for watersheds smaller than 300 acres. The Bridge Design Section is responsible for "bridge-only" projects where support from the Project Development Groups is not required. In those cases, the Bridge Design Section designs any pipe culverts, closed drainage and roadside ditches, and stormwater management systems affiliated with the bridge project. Typical projects include bridge replacement or rehabilitation projects.

When the Bridge Design Section collaborates on a project with the Project Development Section, the Project Development Section will develop the closed drainage and roadside ditches. A new alignment bridge is a typical project in which this type of coordination takes place: the Bridge Design Section designs the structure, while the Project Development Section designs the ramps, profiles, alignment, drainage, and all other aspects of the project.

Refer to Chapter 6 of the DelDOT *Road Design Manual* (2004) for the design and construction of adjacent drainage ditches, pipe culverts (less than 20 square feet), closed drainage systems, and erosion control near stream crossings.

104.1.4 Field Data Collection

One of the first and most important aspects of any hydraulic analysis is a field evaluation. This involves an in-depth inspection of the proposed bridge site and completion of the Field Hydraulic Assessment Checklist in Appendix 104-1. The designer is responsible for completing the checklist.

The purpose of field inspecting the proposed bridge site is to evaluate the stream characteristics and hydraulic properties, the performance of the existing bridge (if applicable), the channel and floodplain topography, and the adequacy and accuracy of the survey data. Any man-made dams located in the reach that will affect the bridge should also be investigated. Additionally an estimate of streambed particle size, including D50, can be made by visual inspection using field tools such as a sand gage card, gravelometer, or wire screen.

The designer should walk along the channel both upstream and downstream at a distance at least equal to the floodplain width, if possible. Any natural hydraulic controls such as rock shoals, or beaver dams as well as man-made controls such as bridges, dams, sewer or water lines suspended across the channel, or other constrictions that have taken place in the floodplain should be evaluated. If these controls have any effect on the high-water profile, they should be taken into account in the modeling. The stream alignment and relation to structure (e.g., outside of bend, bad angle of attack) should also be noted. Coordination is recommended with the Environmental Studies Section to determine if current environmental study, wetland delineation, and/or biological stream section forms are available that have any of the required information described above.

104.1.5 Topographic Survey and Extent of Hydraulic Study

Data for the project will be developed from available survey data and USGS, LiDAR, or other topographic mapping. If sufficient data are not available, additional survey data will have to be obtained. The channel and hydraulic controls should be surveyed so that their effects on the high-water profile can be defined. NAVD 88 is the required datum for hydraulic surveys and studies. Elevation contours at 2-foot intervals for the State of Delaware were produced for New Castle and Kent Counties (based on the 2007 LIDAR) and for Sussex County (based on the 2005 LIDAR.) Data are in line shapefile format. LiDAR data is typically useful for overbank elevation data; however, LiDAR data do not provide elevation data in the stream channel, so a survey is required. The LiDAR data and specifications with respect to the data may be accessed from the Delaware Geological Survey.

Data that will need to be gathered from a field survey include data on stream banks and the channel, any required dam data, and bridge/culvert data. If LiDAR data are available for data in the overbanks the survey of the channel and structures can be merged with the LiDAR data. If LiDAR data is not going to be used, the survey should include the overbank area with the lateral extents of the topographic data to contain the 100-year event within the hydraulic cross sections. A survey is required for all projects that require an H&H analysis, and it is the designer's responsibility to request the survey. Any specific information needed for the Hydraulic Checklist or information in addition to that normally required must be included in the survey request. See Appendix 104-2 for a sample survey request.

For hydraulic studies, the downstream and upstream limits vary based on a number of factors, including tidal influences, other structures within the reach, backwater from other streams/rivers, and the slope of the channel. Streams with flatter slopes or with backwater conditions from a downstream river typically require a longer study reach to be able to balance energies and get an accurate analysis at the bridge.

The limits of the profile computation should be extended downstream to the point where a flow is not affected by the structure (i.e., the flow has fully expanded). This downstream limit can be determined by computing a sensitivity analysis. The HEC-RAS model can be executed

starting at normal depth, and then subsequent runs can be started 1 foot below and above normal depth to see if the model converges before the location of the proposed bridge, as shown on Figure 104-1. The expansion reach length is defined as the distance from the cross section placed immediately downstream of the bridge to the cross section where the flow is assumed to be fully expanded. Chapter 5 of the *HEC-RAS River Analysis System Hydraulic Reference Manual* (USACE HEC, 2010) provides additional guidance on determining the distance to the downstream end of the expansion reach.

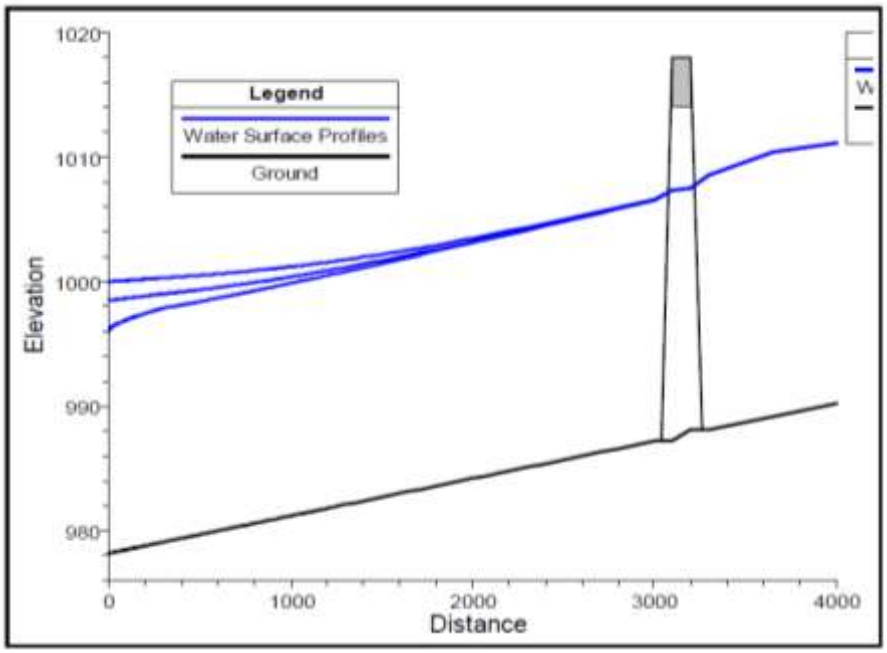

FIGURE 104-1. FLOW PROFILES WITH DOWNSTREAM BOUNDARY UNCERTAINTY (SOURCE: FHWA HDS-7, 2012)

The upstream limit should extend to where any increase from the new bridge or proposed modifications merges into the existing conditions profile (e.g., where the flow lines are approximately parallel and the cross section is fully effective). If the proposed conditions water surface elevation (WSE) is lower than the existing conditions profile, then the minimum distance upstream to be modeled shall be 500 feet. The model should be calibrated using known flood data if sufficient reliable data is available.

Note that for small in-kind pipe or culvert replacements with minimal changes to the hydraulic opening, width, and roadway profile, the upstream and downstream hydraulic limits may be shortened as appropriate. Also, for small projects that use HY-8 or a similar culvert modeling methodology and that do not require backwater calculations, a limited survey is required to define the downstream tailwater condition and the existing structure and roadway data.

104.2 Hydrology

104.2.1 Introduction

Hydrologic analysis is used to determine the rate of flow, runoff, or discharge that the drainage facility will be required to accommodate. The designer must evaluate existing upstream conditions in sizing a structure. If warranted, the designer may evaluate the

potential effects of future land cover conditions on calculated flows by using procedures outlined in USGS Scientific Investigations Report (USGS SIR) 2006-5146, *Magnitude and Frequency of Floods on Nontidal Streams in Delaware* (2006) or by exercising engineering judgment.

104.2.2 Documentation

The design of highway facilities should be adequately documented. It is frequently necessary to refer to plans, specifications, and hydrologic analyses long after the actual construction has been completed. One of the primary reasons for documentation is to evaluate the hydraulic performance of structures after large floods to determine whether the structures performed as anticipated or to establish the cause of unexpected behavior. In the event of a failure, it is essential that contributing factors be identified to avoid recurring damage and help improve future hydraulic designs.

The documentation of a hydrologic analysis is the compilation and preservation of all pertinent information on which the hydrologic decision was based. This might include drainage areas and other maps, field survey information, source references, photographs, hydrologic calculations, flood-frequency analyses, stage-discharge data, and flood history, including narratives from highway maintenance personnel and local residents who witnessed or had knowledge of an unusual event.

Hydrologic data shown on project plans ensure a permanent record, serve as a reference in developing plan reviews, and aid field engineers during construction. Required plan and H&H Report presentation data are provided on Figure 104-2 and in *Section 104.6 – Hydrologic and Hydraulic Report*.

104.2.3 Precipitation

Several hydrologic methods that can be used to estimate flows will require precipitation data in the form of total precipitation or as rainfall intensity as part of the hydrologic input for the method. As precipitation data are regional, the National Oceanic and Atmospheric Administration (NOAA) Atlas 14 has published rainfall intensity-duration data for Delaware's 12 rainfall gages located throughout the state. Precipitation values in Figures 6-5 through 6-7 of the *Road Design Manual* correlate well with the rainfall data in NOAA Atlas 14. Precipitation intensity values for use in the Rational Method may be obtained from Figures 6-5 through 6-7. Figure 104-3 provides 24-hour rainfall totals for use in methods requiring a 24-hour duration, such as the NRCS Curve Number method. Figure 6.11 in the *Road Design Manual* provides these values.

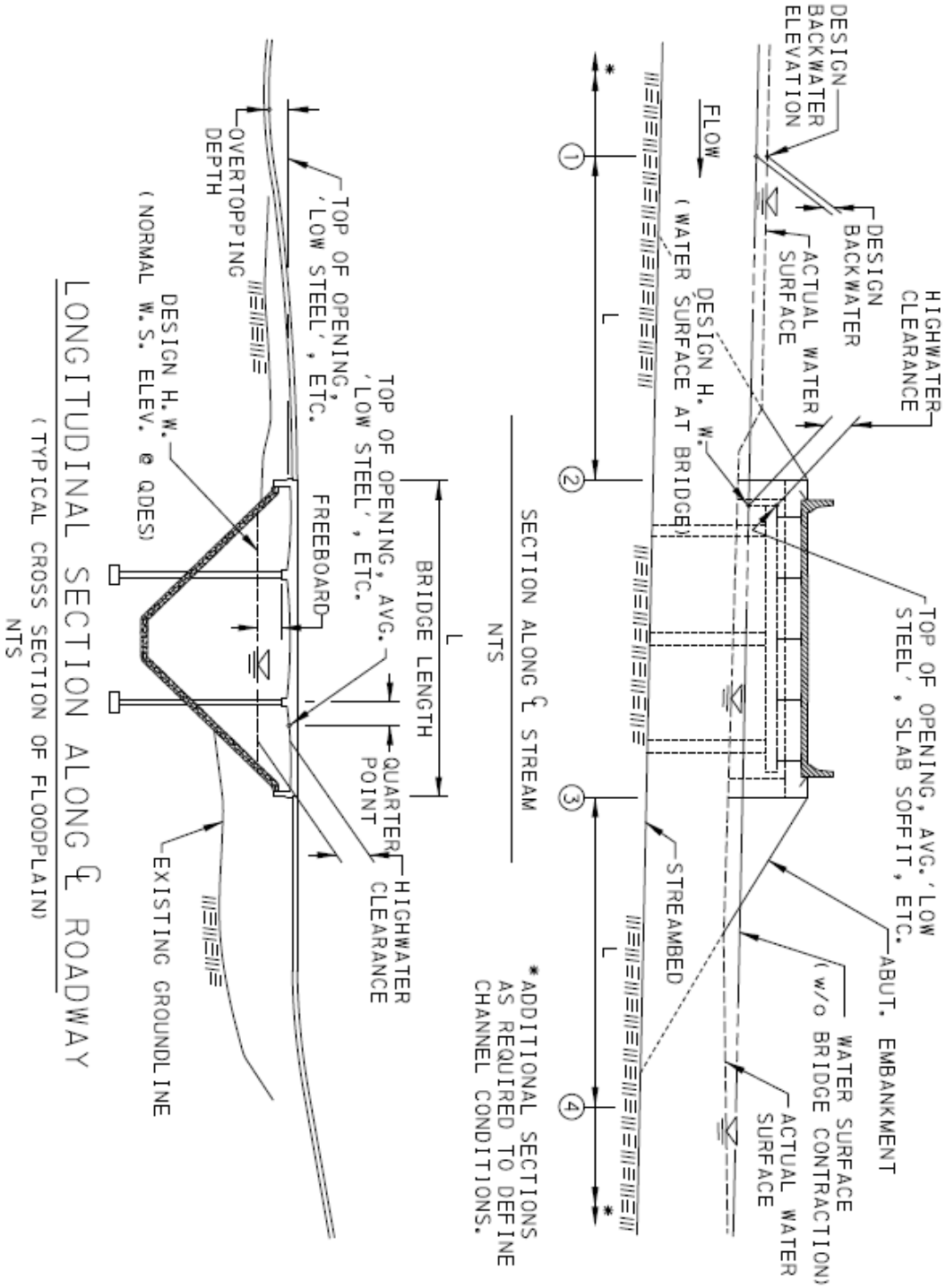

FIGURE 104-2. TYPICAL STREAM SECTION WITH DEFINITIONS

NRCS Type II, 24-Hour Duration			
Storm Event	County		
	New Castle	Kent	Sussex
1-yr	2.7	2.7	2.8
2-yr	3.2	3.3	3.4
5-yr	4.1	4.3	4.4
10-yr	4.8	5.2	5.3
25-yr	6.0	6.5	6.7
50-yr	6.9	7.6	7.9
100-yr	8.0	8.9	9.2
500-yr	10.9	12.6	13.0

FIGURE 104-3. 24-HOUR RAINFALL TOTALS FOR DELAWARE COUNTIES

104.2.3.1 The *Rational Method*

The rational method is an empirical formula relating rainfall to runoff. It is the method used almost universally for computing urban runoff. It is also used to estimate bridge deck drainage for the design of scuppers.

Discharge, as computed by this method, is related to frequency by assuming the discharge has the same frequency as the rainfall used. The storm duration is set equal to the time of concentration of the drainage area. Because of the assumption that the rainfall is of equal intensity over the entire watershed, it is recommended that this formula should be used only for estimating runoff from small areas. Although the rational method is typically only applied to a maximum watershed size of 200 acres, with caution and consideration for watershed characteristics, larger watersheds up to 326 acres (the lower limit of the regression method) may be applicable. The rational method is most frequently used for estimating small, homogenous, or highly impervious drainage areas.

Section 6.6.3.1 of the *Road Design Manual* provides more specifics on use of the rational method, including the procedure, time-of-concentration (Tc) calculations, acceptable "C" value sources, and determination of rainfall intensity. It should be noted that the *Road Design Manual* provides equations to calculate Tc for the rational method (Section 6.6.3.1) that are different from those that it provides for the NRCS curve number method (Section 6.6.3.2). The rational "C" values should be obtained from Figure 6-8 of the *Road Design Manual*.

104.2.3.2 *Delaware Regression Method (SIR 2006-5146)*

DelDOT uses the equations in the current version of the SIR 2006-5146 to estimate flood runoff. These equations are based on specific studies of the nontidal watersheds in Delaware and adjacent states. This method relies on data from streamflow gaging station records combined statistically within a hydrologically homogenous region to produce flood-frequency relationships applicable throughout the region. If the designer is using gaging station records

and wishes to evaluate these values for upstream or downstream sites, the procedures in the USGS publication should be followed.

From the study, it was concluded that reasonable estimates of flood runoff can be made by dividing the state into two hydrologic regions, which correspond to the Coastal Plain and Piedmont physiographic regions as shown on Figure 104-4. In the Piedmont region, the size of the drainage area, percent of forest, percent of hydrologic soil group "A" and percent of storage from the National Hydrography Dataset (NHD) are considered in the equations. The variables used vary based on the design event. In the Coastal Plain region, the mean basin slope (in percent) determined from a 10-meter digital elevation model (DEM) must be considered in addition to the drainage area and percent hydrologic soil group A. Each of these parameters is discussed in the SIR 2006-5146 publication. Land use is not considered in the runoff equations for the Coastal Plain region.

In areas where land use may change, the empirical methods using lump parameters or models such as WinTR-55, HEC-HMS, or HEC-1 are recommended. If the Delaware regression method is used, based on engineering judgment, the designer may consider the effects of possible changes in land use.

The SIR 2006-5146 method is incorporated into the USGS online StreamStats program. StreamStats is a web-based GIS that provides users with access to an assortment of analytical tools that are useful for water-resources planning and management and for engineering design applications, such as the design of bridges. StreamStats allows users to easily obtain streamflow statistics, drainage-basin characteristics, and other information for user-selected sites on streams.

The best estimates of flood frequencies for a site are often obtained through a weighted combination of estimates produced from the regression results and the results from a statistical analysis of stream gage data. The U.S. Department of the Interior, Interagency Advisory Committee on Water Data (1982) recommends, and Tasker (1975) demonstrated, that if two independent estimates of a streamflow statistic are available, a weighted average will provide an estimate that is more accurate than either of the independent estimates. Improved flood-frequency estimates can be determined for Delaware stream gaging stations by weighting the systematic peak-flow record estimates at the station with the regression peak flow estimates. SIR 2006-5146 provides guidelines for the weighting process as well as procedures and equations to estimate flows for a site upstream or downstream of a gaged location and for sites between gaged locations.

FIGURE 104-4. COASTAL PLAIN AND PIEDMONT PHYSIOGRAPHIC PROVINCES OF DELAWARE SEPARATED BY THE FALL LINE (USGS, 2006)

104.2.3.3 *Published Reports*

Published reports may be used for comparison with the calculated runoff. Delaware Department of Natural Resources and Environmental Control (DNREC) has developed or is in various stages of developing watershed stormwater management plans for the Appoquinimink, Upper Nanticoke, and Murderkill watersheds. These plans include a detailed hydrologic model that has been calibrated against stream gage data, data obtained by regression methods, or other reliable hydrologic data. The watersheds were divided into subwatersheds; therefore, flow values at road crossings may be available that are not available from any other source. For projects located in these watersheds, these reports should be reviewed and flows used as appropriate. The calibrated HEC-HMS files may be available from DNREC.

The Federal Emergency Management Agency (FEMA) Flood Insurance Study (FIS) contains runoff information for many streams in Delaware. The report documents the methods used to determine runoff for each stream. The FIS reports were prepared by a variety of sources (e.g., the USACE, private consultants, the Delaware River Basin Commission). These reports contain floodplain information for many streams in Delaware. The reports include historical runoff data as well as calculated runoff data. However, due to the variety of preparers, the flows should be checked against other reliable methods. The flow values reported in these other reports should be verified as to consistency with the standards presented herein, and checked for validity of data utilized, and methodology. Published dam reports should also be referenced as contained in *Section 104.3.3 – Hydraulics for Dam Safety Projects.*

The USACE and FEMA have developed and applied a state-of-the-art storm surge risk assessment capability for Region III, which includes the Delaware Bay, the Delaware-Maryland-Virginia Eastern Shore, and all the waterways connected to these systems. This information, some of which is contained in ERDC/CHL TR-11-1 *Coastal Storm Surge Analysis: Modeling System Validation Report 4* (USACE ERDC, 2013), would be helpful for any tidal bridges.

104.2.3.4 *Flood-Frequency Analysis of Recorded Stream Gage Data*

The method of analyzing flood-frequency relationships from actual streamflow data for a single gaging station enables the use of records of past events to predict future occurrences. The procedures described in *Guidelines for Determining Flood Flow Frequency,* Bulletin 17B (U.S. Department of the Interior, Interagency Advisory Committee on Water Data, 1982) should be followed. This method is often referred to as the Bulletin 17B method, and uses the Log Pearson Type III distribution. The Log-Pearson Type III distribution is a statistical technique for fitting frequency distribution data to predict the design flood for a river at some site and is performed on records of annual maximum instantaneous peak discharges collected systematically at streamflow gaging stations.

104.2.3.4.1 Flood-Frequency Analysis Guidelines

The HFWAG, consisting of representatives from Federal agencies, private consultants, academia, and water management agencies, has recommended procedures to increase the usefulness of the current guidelines for hydrologic frequency analysis and to evaluate other procedures for hydrologic frequency analysis (HFAWG, 2013). The HFAWG will be incorporating their findings into Bulletin 17C. When Bulletin 17C is adopted by the FHWA, the procedures in that publication should supersede those in Bulletin 17B.

The computer programs PeakFQ, developed by the USGS, and Hydrologic Engineering Center Statistical Software Package (HEC-SSP), developed by the USACE HEC, provide estimates of instantaneous annual-maximum peak flows for a range of recurrence intervals. The Pearson Type III frequency distribution is fitted to the logarithms of instantaneous annual peak flows following the Bulletin 17B guidelines of the U.S. Department of the Interior Interagency Advisory Committee on Water Data. The parameters of the Pearson Type III frequency curve are estimated by the logarithmic sample moments (mean, standard deviation, and coefficient of skewness) with adjustments for low outliers, high outliers, historic peaks, and generalized skew.

PeakFQ reads annual peaks in the WATSTORE standard format and in the Watershed Data Management (WDM) format. Annual peak flows are available from NWISWeb (http://nwis.waterdata.usgs.gov/usa/nwis/peak). (Data should be retrieved in the WATSTORE standard format, not the tab-separated format.)

This method assumes that there are no changes during the period of record in the nature of the factors causing the peak magnitudes. The ramifications of this assumption can be minimized by making every effort to determine the past conditions of the drainage area and, if possible, making allowances for changes. The most common changes are man-made and consist of such modifications as storage and land development. The user of hydrologic data must be acquainted with the procedures for evaluating streamflow data, the techniques for preparing a flood-frequency curve, and the proper interpretation of the curve.

Since most of the stream records in Delaware are sufficiently long to give good flood-frequency relationships, considerable weight should be given to the stream record in estimating design floods. When a gage record is of short duration or poor quality, or when the results are judged to be inconsistent with field observations or sound engineering judgment, the analysis of the gage record should be supplemented with other methods. The validity of a gage record should be demonstrated and documented. Gage records should contain at least 10 years of consecutive peak flow data, and they should span at least one wet year and one dry year. If the runoff characteristics of a watershed are changing (e.g., from urbanization), then a portion of the record may not be valid.

Where there is a stream gage at a bridge or culvert, the USGS has developed the flood flow frequency for the 50- , 20-, 10-, 4-, 2-, 1-, 0.5-, and 0.2-percent-chance of occurrence (2-, 5-, 10-, 25-, 50-, 100-, 200-, and 500-year) events; these frequencies are reported in Table 6 of USGS SIR 2006-5146. In addition, the publication reports calculated SIR 2006-5146 values as well as a weighted value based on the statistical analysis value and the regression method in Table 8. As time elapses and more annual rainfall events are recorded, the data in these tables will become outdated.

There will be times when estimates made from a flood-frequency analysis of a gaging station on the stream being studied will not agree with a regional analysis, such as the SIR 2006-5146 method. Various factors such as length of runoff records, storm distribution, and parameters used in the regional analysis could account for some of the discrepancies. When gaging station records are used, the designer should consult SIR 2006-5146 and current USGS data.

104.2.3.4.2 Transposition of Flows

When a project site falls between 0.5 and 1.5 times the drainage area of a stream gaging station on the same stream, the flow may be transposed to the project site using the methodology presented in SIR 2006-5146 (equation 22, page 31).

104.2.3.5 *Other Methods/Models*

104.2.3.5.1 NRCS TR-55 Curve Number Method (WinTR-55 Program)

Technical Release 55 (TR-55) *Urban Hydrology for Small Watersheds* is an NRCS, formerly the Soil Conservation Service (SCS), curve number method and is applicable to small urban watersheds (NRCS, 1986). The report provides a graphical and a tabular method for computing peak discharges of drainage basins with areas ranging from 10 acres up to 2,000 acres (3.1 square miles); however, the *Road Design Manual* states that TR-55 can be used for complex watersheds up to 300 acres. The required input data are drainage area, curve number (which is a function of land cover and hydrologic soil group), and a Tc. The Delaware soils and their assigned hydrologic soil group are shown on Figure 6-10 of the *Road Design Manual*.

TR-55 uses a segmental method to compute Tc (i.e., flow time is computed by adding the times for the overland, shallow concentrated, and channel segments). Chapter 6 of the *Road Design Manual* provides the methodology and equations to compute Tc. Travel time (Tt) is the ratio of flow length to flow velocity.

This method must also meet the following conditions:

1. Assumes that rainfall is uniformly distributed over the entire basin.
2. Basin is drained by a single main channel or by multiple channels with times of concentration (Tc) within 10 percent of each other.
3. Tc is between 0.1 and 10 hours.
4. Storage in the drainage area is ≤ 5 percent and does not affect the time of concentration.
5. Watershed can be accurately represented by a single composite curve number.

The TR-55 method greatly overestimates runoff for very flat watersheds in the Delaware coastal plain. If TR-55 is used, the Curve Number must be calibrated by comparing the flows generated by TR-55 against results from another method in this section, such as the Delaware regression method. Curve Numbers must be adjusted to match the desired peak of the design event within the 90-percent confidence interval, upper limit.

Limitations of TR-55 are described on page 5-3 of the *Small Watershed Hydrology: WinTR-55 User Guide* (USDA NRCS, 2009). The tabular method is used to determine peak flows and hydrographs within a watershed. However, its accuracy decreases as the complexity of the watershed increases. NRCS recommends that the computer program TR-20 be used instead of the tabular method if any of the following conditions apply:

a. Tt is greater than 3 hours.

b. Tc is greater than 2 hours.

c. Drainage areas of individual subareas differ by a factor of 5 or more.

d. The entire flood hydrograph is needed for flood routing.

e. The time to peak discharge needs to be more accurate than that obtained by the tabular method.

WinTR-55 is a single-event, rainfall-runoff, small-watershed hydrologic model based on the TR-55 methodology. The WinTR-55 program can generate and plot hydrographs, compute peak discharges, and perform detention pond storage estimates. It can account for hydrograph shift and attenuation due to reach routing. WinTR-55 has limitations that assume a less complex watershed (e.g., 10 subwatersheds or less, 25-square-mile drainage area maximum, trapezoidal-shaped channel, and 2-point stage-storage curve for a reservoir). Refer to the TR-55 manual and *WinTR-55 User Guide* for additional limitations.

104.2.3.5.2 WinTR-20

The WinTR-20 computer program, developed by the NRCS, computes flood hydrographs from runoff and routes the flow through stream channels and reservoirs; WinTR-20 is preferred over TR-55 and the DOS version of TR-20.

In the WinTR-20 program, routed hydrographs are combined with those of tributaries. The program provides procedures for hydrograph separation by branching or diversion of flow and for adding baseflow. Peak discharges, their times of occurrence, WSEs and duration of flows can be computed at any desired cross section or structure. Complete discharge hydrographs as well as discharge hydrograph elevations can be obtained if requested. The program provides for the analysis of up to nine different rainstorm distributions over a watershed under various combinations of land treatment, floodwater retarding structures, diversions, and channel modifications. Such analyses can be performed on as many as 200 subwatersheds or reaches and 99 structures in any one continuous run.

104.2.3.5.3 HEC-HMS and HEC-1

HEC-HMS is a program that is a generalized modeling system capable of representing many different watersheds. It is designed to simulate the precipitation-runoff processes of dendritic watershed systems and is applicable in a wide range of geographic areas for solving the widest- possible range of problems. HEC-HMS, like its predecessor, HEC-1, is extremely flexible in that its hydrologic elements include subbasins, reaches, junctions, reservoirs, and diversions. Hydrograph computations should be performed using the Delmarva Unit Hydrograph (UH) for all projects south of the Chesapeake and Delaware Canal, and the NRCS standard UH or Snyder UH north of the Chesapeake and Delaware Canal. User-specified s-graphs and UHs are allowed if more specific data are available. The Snyder method allows for variable peak flow rate factor, and calibrating the Snyder method makes it more versatile. HEC-HMS is preferred over HEC-1, which is Fortran based; HEC-HMS is Windows-compatible with a graphical user interface.

104.2.3.5.4 GIS Preprocessing Models

There are various GIS software packages and/or extensions to GIS software that allow preprocessing of digital terrain (DEMs, triangulated irregular networks [TINs]), land use, and soil data to develop the parameters (time-of-concentration values, rational “C” values, NRCS CN, etc.) required for hydrologic methods or models. These packages can save valuable time

and provide accurate data and parameters that can be modified for various scenarios. Two such packages are discussed below.

104.2.3.5.4.1 The Watershed Modeling System

The Watershed Modeling System (WMS) is a comprehensive GIS/modeling environment for hydrologic analysis. It was developed by the Environmental Modeling Research Laboratory of Brigham Young University in cooperation with the USACE Waterways Experiment Station and FHWA, and is currently being developed by Aquaveo LLC. WMS offers state-of-the-art tools to perform automated basin delineation and to compute important basin parameters such as area, slope, and runoff distances for input into the H&H models discussed in this section. WMS supports the HEC-1, HEC-HMS, TR-20, and SWMM models, and the TR-55, rational, and NFF methods.

104.2.3.5.4.2 GeoHMS

The Geospatial Hydrologic Modeling Extension (HEC-GeoHMS) has been developed as a geospatial hydrology toolkit for engineers and hydrologists with limited GIS experience. HEC-GeoHMS uses ArcGIS and the Spatial Analyst extension to develop a number of hydrologic modeling inputs for the Hydrologic Engineering Center's Hydrologic Modeling System, HEC-HMS, and is useful when hydrologic modeling is required (e.g., for a bridge crossing below a dam). It can be downloaded from the USACE HEC website. ArcGIS and its Spatial Analyst extension are available from the Environmental Systems Research Institute, Inc. (ESRI). Analyzing digital terrain data, HEC-GeoHMS transforms the drainage paths and watershed boundaries into a hydrologic data structure that represents the drainage network. The program allows users to visualize spatial information, document watershed characteristics, perform spatial analysis, and delineate subbasins and streams. Working with HEC-GeoHMS through its interfaces, menus, tools, buttons, and context-sensitive online help allows the user to quickly create hydrologic inputs for HEC-HMS.

104.2.4 Methodology Selection Guidance

The criteria below provide general guidelines and identify which method to use for particular circumstances. However, the final decisions regarding the suitability of a particular method or model for a particular project must be determined by engineering judgment on a case-by-case basis. Even though a methodology or model is recommended for various circumstances below, those methods or models should still be compared against other methods and models, field observations, local testimony, and any additional maintenance or site history.

1. For drainage areas less than 326 acres, the rational method is recommended.

2. For project locations at a stream gage, perform the flood frequency analysis of recorded stream gage data and consider the weighted method described above and in the Delaware regression method (USGS SIR 2006-5146).

3. For ungaged site locations with a drainage area that is between 0.5 and 1.5 times the drainage area of a stream gaging station that is on the same stream, use the transposition method described above.

4. For site locations downstream of a dam, lake, or reservoir that will attenuate flows and impact the flows at the site, the results of Delaware's Dam Safety Program should be

used. If these data are not available for a particular site, the procedure outlined in *Section 104.3.3 – Hydraulics for Dam Safety Projects* must be used.

5. For unregulated, ungaged site locations on nontidal streams, the Delaware regression method (USGS SRI 2006-5146), HEC-HMS, TR-55, or TR-20 should be considered.

6. For ungaged site locations with a drainage area that is *not* between 0.5 and 1.5 times the drainage area of a stream gaging station that is on the same stream, use the most appropriate method from the guidance above.

7. Account for urbanization, if warranted based on engineering judgment, according to the guidelines provided in USGS SIR 2006-5146.

104.2.5 Design Flood Frequency

The design frequencies for bridges and pipe culverts for each highway functional classification are shown on Figure 104-5. If a design frequency less than that shown on Figure 104-5 is used, the design must be based on a risk analysis and must be approved by the Bridge Design Engineer. The requirements for a risk analysis are documented in *Section 104.8.4 – Risk Assessment or Analysis*. Evacuation routes should be evaluated to determine if a larger design event is applicable. For bridges located immediately downstream of a dam, coordination with DNREC's Dam Safety Program is required.

Functional Classification	Design Frequency (Years)	
	Bridges and Culverts (Over 20-feet clear span)[1]	Bridges under 20 feet, Pipes and Culverts[2]
Interstates, Freeways and Expressways	50	50
Principal Arterials and Minor Arterials	50	50
Major Collectors and Minor Collectors	50	50/25 rural collector
Local Roads and Streets and Subdivision Streets	25	25
Evacuation Routes[3]		

[1] Rigid frames greater than 20-feet span are considered bridges.
[2] Greater than 20 square feet.
[3] Design of bridges and culverts on evacuation routes should be coordinated with DelDOT's Transportation Management Team Evacuation data.
http://www.deldot.gov/information/projects/tmt/evac_map.shtml

FIGURE 104-5. DESIGN FREQUENCY CRITERIA

104.2.6 Confidence Intervals

Confidence limits are used to estimate the uncertainties associated with the determination of floods of specified return periods from frequency distributions, as shown on Figure 104-6.

Since a given frequency distribution is only an estimated determinant from a sample of a population, it is probable that another sample from the same stream but taken at a different time would yield a different frequency curve. Confidence limits, or more correctly, confidence intervals, define the range within which these frequency curves could be expected to fall with specified confidence or levels of significance.

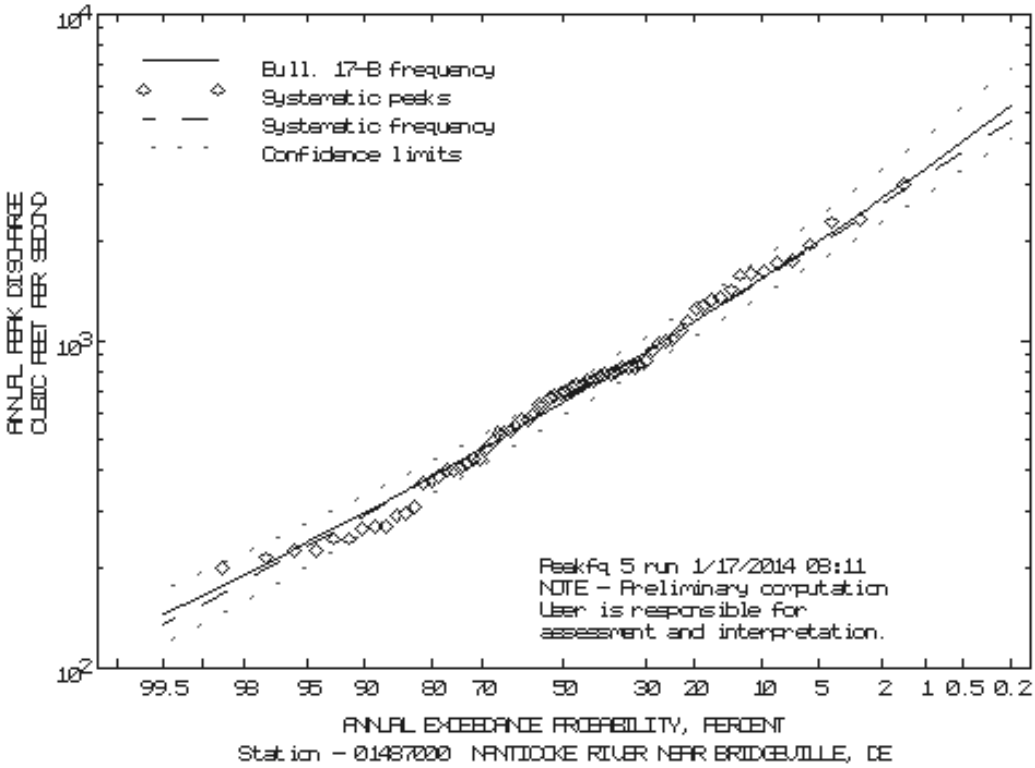

FIGURE 104-6. SAMPLE PLOT OF UPPER AND LOWER 90% CONFIDENCE INTERVALS APPLIED TO THE NANTICOKE RIVER.

It should be left to engineer's judgment and their confidence in the calculated results whether or not confident limits need to be explored. Bulletin 17B outlines a method for developing upper and lower confidence intervals. If confidence limits are employed, they should follow Table 104-1, which provides the confidence interval for each road design classification.

Table 104-1. Design Frequency and Confidence Interval		
Functional Classification	Design Frequency (Years: Confidence Interval)	
	Bridges (Over 20-foot span)	Bridges Under 20 feet, Pipes and Culverts[1]
Interstates and Freeways	90	67
Principal Arterials and Minor Arterials	75	67
Major Collectors and Minor Collectors	67	50
Local Roads and Streets and Subdivision Streets	50	50

[1] Greater than 20 square feet.

The designer is given leeway for adjusting the design frequency and/or confidence interval to account for special circumstances as warranted for individual projects based on risk/failure analyses.

104.2.7 Frequency Mixing (Probability of Coincidental Occurrence)

The designer is often faced with a situation in which the hydraulic characteristics of the subject facility are influenced by a flood condition of a separate and independent drainage course. For example, a small stream may outfall into a major river that itself is an outfall for a large and independently active watershed. It can reasonably be expected that these two waterways would seldom peak at the same time. Consequently, there are two independent events: one, a storm event occurring on the small stream; the other, a storm event applicable to the larger watershed.

In ordinary hydrologic circumstances, flood events on different watersheds are not usually entirely independent. Therefore, guidelines have been developed by the NCHRP Transportation Research Board to provide acceptable mixing criteria for independent waterways affected by separate storm events. NCHRP Web-Only Document 199, *Estimating Joint Probabilities of Design Coincident Flows at Stream Confluences* (2013) is a scientific approach to this issue that may be used for bridges, riverine structures, and culverts.

The effects of tidal flows must be considered when the designer is evaluating the frequency mixing relationships. For more information, see *Section 104.3.4 – Tidal Hydraulics – Bridges and Culverts.*

104.3 Hydraulics

Hydraulic analysis is used to evaluate the effect of proposed highway structures on water surface profiles, flow and velocity distributions, lateral and vertical stability of channels, flood risk, and the potential reaction of streams to changes in variables such as structure type, shape, location, and scour control measures. Various hydraulic considerations and models for culverts and bridges are described below.

104.3.1 Culverts

A culvert is a structure that is usually a closed conduit or waterway that may be designed hydraulically to take advantage of submergence to increase hydraulic capacity. A culvert conveys surface water through a roadway embankment or away from the highway right-of-

way. In addition to this hydraulic function, it also must carry construction traffic, highway traffic, and earth loads; therefore, culvert design involves both hydraulic and structural design. The hydraulic and structural designs must be such that risks to traffic, property damage, and failure from floods are consistent with good engineering practice and economics.

Hydraulic design of culverts should be in conformance with *Road Design Manual,* FHWA's HDS-5, *Hydraulic Design of Highway Culverts* (2012a), and other support documents such as FHWA's HEC-14, *Hydraulic Design of Energy Dissipators for Culverts and Channels* (2006). In most cases, frames should be designed as culverts. Computer programs such as HEC-RAS and HY-8 are recommended for the hydraulic analysis.

Where debris accumulation may be a problem, single-barrel culvert designs are preferred. In many instances, three culvert installations could be a single box, but the three pipes are more economical to install. No more than three barrels should be constructed at a single location. Allow at least 2 feet between pipe culverts on multi-pipe installations to allow room for compaction equipment.

104.3.1.1 *Sizing*

Culverts, as distinguished from bridges, are usually covered with embankment and are composed of structural materials around the entire perimeter, although some are supported on spread footings with the streambed or riprap channel serving as the bottom. For economic and hydraulic efficiency, culverts should be designed to operate with the inlet submerged during design flows if conditions permit. Bridges, on the other hand, are not designed to take advantage of submergence to increase hydraulic capacity, even though some are designed to be inundated under flood conditions. The designer must consider analysis of the following items before starting the culvert design process:

1. Site and roadway data
2. Design parameters, including shape, material and orientation
3. Hydrology (flood magnitude versus frequency relation)
4. Channel analysis (stage versus discharge relation)

The maximum allowable headwater (HW) is the depth of water, measured from the entrance invert, that can be ponded during the design flood. Freeboard is an additional depth regarded as a safety factor, above the peak design water elevation. The minimum freeboard for culverts is 1 foot below the edge of pavement or top of curb in town sections. The peak design water elevation in this case will be based on the design event displayed on Figure 104-5. Consideration should be given to the impact on the upstream properties. The headwater should be checked for the design flood, based on roadway classification, and for the 100-year flood to ensure compliance with floodplain management criteria and safety.

The culvert must be designed according to the appropriate design frequency in conformance with *Section 104.2.6 – Confidence Intervals*.

104.3.1.2 *Site Conditions and Skew*

The performance, capacity, and required culvert size of a culvert are functions of several parameters, including the culvert geometric configuration and stream characteristics. Roadway profile, terrain, foundation condition, aquatic organism passage requirements, shape of the existing channel, allowable headwater, channel characteristics, flood damage evaluations, construction and maintenance costs, and service life are some of the factors that influence culvert type selection.

Where the stream approach is skewed, all waterway areas should be measured normal to the stream flow, i.e., corrected by the bridge length times the cosine of the skew angle. Adjustment for skew should be made for projects with a skew between 20 and 35 degrees. In *Hydraulics for Bridge Waterways* (FHWA HDS1, 1978) model testing of the effect of skew on low-flow skewed crossings shows angles less than 20 degrees provide acceptable flow conditions without adjusting for skew. For increasing angles, flow efficiency decreased. The results indicate that using the projected opening width is adequate for angles up to 30 degrees for small flow contractions. A skew angle greater than 30 to 35 degrees requires closer examination, as the skew adjustment may be underestimating the true effective flow width. The projected area of the piers should likewise be corrected. The plans should indicate that the waterway areas are normal to stream flow when corrected for a skewed approach.

104.3.1.2.1 Channel Characteristics

The design of the culvert should consider the physical characteristics of the existing stream channel. For purposes of documentation and design analysis, sufficient channel cross sections (at least four), a streambed profile, and the horizontal alignment should be obtained to provide an accurate representation of the channel, including the floodplain area. These cross sections can be used to obtain the natural streambed width, side slopes, and floodplain width. Often, the proposed culvert is positioned at the same longitudinal slope as the streambed. The channel profile should extend far enough beyond the proposed culvert location to define the slope and location of any large streambed irregularities, such as headcutting. The designer must also use this preconstruction data to predict the consequences of constricting the natural floodplain by installing an embankment across a floodplain.

General characteristics helpful in making design decisions should be noted. These include channel roughness, Manning's n values, the type of soil or rock in the streambed, the bank conditions, type and extent of vegetal cover, permanent or intermittent wetlands, amount of drift and debris, ice conditions, and any other factors that could affect the sizing of the culvert and the durability of culvert materials. Photographs of the channel and the adjoining area can be valuable aids to the designer and serve as documentation of existing conditions.

104.3.1.2.2 High-Water Information

High-water marks can be can be used to check results of flood estimating procedures, establish highway grade lines, and locate hydraulic controls. Often the high-water mark represents the energy of the stream and not the water surface. Even if the high-water marks are available, it often is difficult to determine the flood discharge that created them.

When high-water information is obtained, the individuals contacted should be identified and the length of their familiarity with the site should be noted. In addition, the designer should

ascertain whether irregularities such as channel blockage or downstream backwater altered the expected high water. Other sources for such data might include commercial and school bus drivers, mail carriers, law enforcement officers, and highway and railroad maintenance personnel.

104.3.1.2.3 Inlet/Outlet Conditions

Culverts exhibit a wide range of flow patterns under varying discharges and tailwater elevations. To simplify the design process, two broad flow types are defined—inlet control and outlet control. A culvert operates with inlet control when the flow capacity is controlled at the entrance by the depth of headwater and the entrance geometry, including the barrel shape, the cross-sectional area, and the inlet edge. With inlet control, the roughness and length of the culvert barrel and outlet conditions are not factors in determining culvert hydraulic performance. Special entrance designs can improve hydraulic performance and result in a more efficient and economical structure. Entrance geometry and wingwall configuration are factors where improvement in performance can be achieved by modifications to the culvert inlet, particularly between projecting inlets and beveled edge inlets.

In outlet control, the culvert hydraulic performance is determined by the factors governing inlet control plus the controlling WSE at the outlet and the slope, length, and roughness of the culvert barrel. With outlet control, factors that may appreciably affect performance for a given culvert size and headwater are barrel length and roughness, culvert slope, and tailwater depth.

For each type of control, the headwater elevation is computed using applicable hydraulic principles and coefficients, and the greater headwater elevation is adopted for the design.

The maximum acceptable outlet velocity should be identified. High headwater can produce unacceptable velocities; therefore, the headwater should be set to produce acceptable velocities. Otherwise, stabilization or energy dissipation should be provided where acceptable velocities are exceeded. For streams with debris issues, trash racks should be considered.

Refer to the *Road Design Manual*, Figure 6.3, for the required pipe cover. Refer to DelDOT's *Standard Construction Details,* Standard Specifications*,* AASHTO LRFD*,* and manufacturer's recommendations for proper bedding and cover requirements under roadway pavements.

104.3.1.3 *Shape/Material*

Culvert shape and material are discussed in *Section 107 – Final Design Considerations – Substructure.*

104.3.1.4 *Environmental Considerations*

Culverts must be designed with environmental considerations such as fish, reptile and amphibian migration, habitat, riparian buffers, channel erosion, and sedimentation based on the recommendations of the Environmental Studies Section. In most cases, a natural bottom in culverts is required to facilitate the passage of aquatic organisms and endangered species such as the bog turtle, and for stream continuity.

Many resource agencies have established design criteria for the passage of aquatic organisms through culverts. These include maximum allowable velocity, minimum water depth, maximum culvert length and gradient, type of structure, and construction scheduling.

For culvert locations on streams with a continuous flow, the ability to accommodate migrating and resident aquatic organisms is an important design consideration. Excessive velocity, inadequate water depth, and high outlet elevations are the most frequent causes of passage problems for aquatic organisms. Culverts should be designed to simulate the natural stream bottom conditions by maintaining desirable flow depths and velocities.

Constructing depressed culverts will help to simulate natural conditions by promoting the deposition and retention of streambed material inside the culvert. The streambed material will increase the roughness coefficient of the culvert bottom, which helps to maintain the minimum flow depth and reduce velocities. Baffles or weir plates may be added for this purpose. Baffles should be used to retain channel-bed fill (CBF) in culverts placed on stream slopes greater than 2 percent.

In addition, low-flow channels and correction of grades for better stream continuity should be applied where recommended by the Environmental Studies Section. DelDOT's Environmental Studies Section has developed guidelines for pipes, boxes, and covering riprap. General guidelines to address environmental concerns are summarized below:

1. Only one barrel of a multiple-barrel pipe or box culvert installation needs to be lowered.

2. Pipes are depressed 6 inches to allow siltation to provide a natural bottom. If there is a series of pipes, the center pipe is to be lowered 6 inches below the streambed and the side pipes are to be raised 6 inches above unless cover is a problem. If cover is a problem, coordinate with the Environmental Studies Section for a variance. (See *Section 350.01 – Pipe Culvert Details*).

3. Box culverts are depressed 12 inches. Depressed boxes should be filled with channel-bed fill material. Additionally, riprap should be depressed 12 inches below the streambed, choked with borrow (type B), and covered with channel-bed fill material or the gradation material specified for the county. (See *Section 355.01 – Precast Concrete Box Culvert Details*).

4. Pipe and culvert outlets inverts should not be above the stream invert to avoid a hanging culvert situation. The designer should work with the Environmental Studies Section and reference the biological stream forms.

5. In wide, shallow streams, one barrel of a multiple-barrel culvert should be depressed to carry low flow, or weirs can be installed at the upstream end of some barrels to provide for passage of aquatic organisms through other barrels at low flow. The weir option is particularly useful for cover-challenged pipes.

6. For low-flow channels in rigid frames and bridges, stream bottoms should have riprap depressed 12 inches and should follow the shape of the proposed low-flow channel to help with its long-term stability. Locations with sufficient depth of water in all seasons do not require low-flow channels in most cases. Low-flow channels and channels should be used as recommended by the Environmental Studies Section.

7. Side slopes where riprap is used should be backfilled with #57 stone and cover with soil and seed from roughly the ordinary high water to the top of bank as appropriate.

8. Riprap at smaller structures should be based on scour calculations. Riprap should be choked with Delaware #57 stone or channel-bed material unless conditions warrant otherwise.

9. The designer is directed to *Section 300 – Typical Bridge Design Detail* for typical pipe, culvert, or rigid frame details.

The H&H report must contain information as to whether the stream flow is continuous or intermittent. The report must contain all necessary information to support the decision to provide or not provide passage for aquatic organisms through the culvert.

The proposed arrangements for passage of aquatic organisms must be indicated on the plans for the proposed culvert.

104.3.2 Bridges

H&H analyses are required for all bridge projects over waterways. Typically, these analyses should include an estimate of peak discharge (sometimes complete runoff hydrographs), comparisons of water surface profiles for existing and proposed conditions, consideration of potential stream stability problems, and consideration of scour potential.

Bridges are important and expensive highway-hydraulic structures and are vulnerable to failure from flood-related causes. To minimize the risk of failure, the hydraulic requirements of stream crossings must be recognized and considered carefully.

104.3.2.1 *Sizing*

The hydraulic analysis of a bridge for a particular flood frequency involves the following general considerations related to the hydraulic analyses for the location and design of the bridge:

1. Backwater associated with each alternative vertical profile and waterway opening should not significantly increase flood damage to property upstream of the crossing.

2. Effects on flow distribution and velocities – the velocities through the structure(s) should not damage either the highway facility or increase damages to adjacent property.

3. Existing flow distribution should be maintained to the extent practicable.

4. Pier spacing and orientation, and abutment should be designed to minimize flow disruption and potential scour.

5. Foundation design and/or scour countermeasures should be considered to avoid failure by scour.

6. Freeboard at structure(s) should be designed to pass anticipated debris and ice.

7. Risks of damage should be considered.

8. Stream instability countermeasures.

9. Ways to achieve minimal disruption of ecosystems and values unique to the floodplain and stream should be considered.

10. Highway level of service should be compatible with that commonly expected for the class of highway.

11. Design choices should support costs for construction, maintenance, and operation, including probable repair and reconstruction and potential liability that are affordable.

The bridge routines in HEC-RAS allow for three different methods to model flow through bridges; low flow, high flow and combination flow. Low flow occurs when the water only flows through the bridge opening without coming into contact with the low chord and is considered open channel flow. The energy equations (standard step backwater) would be applied in this instance. If piers are present, then the momentum and/or Yarnell equations should be applied. Although HEC-RAS allows computations of all three methods simultaneously, the results based on the highest energy answer should be used.

High flow occurs when the water surface encounters the highest point in the low chord on the upstream side of the bridge. Orifice or sluice gate flow will occur though the waterway opening and if the road is overtopped, weir flow will occur over the roadway. The pressure and/or weir high-flow method should be toggled on in HEC-RAS if this situation occurs. Combination flow occurs when both low flow and pressure flow occur simultaneously with flow over the bridge.

FHWA's HDS-7, *Design of Safe Bridges* (2012b) is a document that provides technical information and guidance on the hydraulic analysis and design of bridges. The goal is to provide information such that bridges can be designed as safely as possible while optimizing costs and limiting impacts to property and the environment. Many significant aspects of bridge hydraulic design are discussed, including regulatory topics, specific approaches for bridge hydraulic modeling, hydraulic model selection, bridge design impacts on scour and stream instability, and sediment transport.

Freeboard for a bridge is defined as the clear vertical distance between the water surface and the low point of the superstructure. The minimum freeboard is 1 foot for the design event. In no case should the bearings be submerged during the design event.

104.3.2.2 *Site Conditions and Skew*

Hydraulic considerations in site selection are numerous because of the many possible flow conditions that may be encountered at the crossing and because of the many water-related environmental factors. Flow may be in an incised stream channel, or the stream may have floodplains that are several miles wide. Floodplains may be clear or heavily vegetated, symmetrical about the stream channel or highly eccentric, clearly defined by natural topography or man-made levees, or indeterminate. Flow may be uniformly distributed across the floodplains or concentrated in swales in the overbank areas. Flow direction often varies with the return period of the flow, so that a bridge substructure oriented for one flow would be incorrectly oriented for another. Flow direction in overbank areas is often unrelated to that in the main or low-flow channel. In some instances, the floodplains convey a large proportion of the total flow during extreme floods and the stream channel conveys only a small proportion.

Not all of the above will apply to each stream crossing or bridge location, but many of the most important site considerations are hydraulic or water related. Crossing location alternatives often do not include the most desirable site from the hydraulic design viewpoint, but the difficulties involved often can be reduced by careful hydraulic analysis.

Features that are important to the hydraulic performance of a bridge include the approach fill alignment, skew, and profile; bridge location and length; span lengths; bent and pier location and design; and foundation and superstructure configuration and elevations. These features of a highway stream crossing are usually the responsibility of location, design, and bridge engineers; however, the integrity and safety of the facility are often as dependent upon competent hydraulic design as on competent structural and geometric design.

The same principles that apply to culvert skew as discussed in *Section 104.3.1.2 – Site Conditions and Skew* apply to bridge skew.

Incorporation of roadway approaches that will accommodate overflow may be necessary for some configurations. Such overflow reduces the threat to the bridge structure itself. Of course, the flow of traffic is interrupted, and the potential costs associated with such interruption and potential damage to the roadway embankment and bridge integrity should be considered by the designer.

Some of the factors to consider in the selection and orientation of bridge alignments are as follows:

1. The safety of the highway user
2. Vertical profile and horizontal alignment
3. Hydraulic performance
4. Construction and maintenance costs
5. Foundation conditions
6. Highway capacity
7. Navigation requirements
8. Stream regime

104.3.2.3 *Shape/Material*

Bridge shape and material are discussed in *Section 107 – Final Design Considerations – Substructure*.

104.3.3 Hydraulics for Dam Safety Projects

Dams in Delaware are regulated by Section 5103 Dam Safety Regulations of Title 7 of the Delaware Code. It is the purpose of these Regulations to provide for the proper design, construction, operation, maintenance, and inspection of dams in the interest of public health, safety, and welfare in order to reduce the risk of failure of dams and to prevent death or injuries to persons; damage to downstream property, infrastructure, and lifeline facilities; and loss of reservoir storage. The Delaware Dam Safety Program is administered by the Delaware Department of Natural Resources and Environmental Control.

The owner of any new or existing dam that is regulated under these Regulations and is classified as a Class I High Hazard Potential, or Class II Significant Hazard Potential, in

accordance with Section 5.0 of the Regulations, must prepare an Emergency Action Plan (EAP) in accordance with the requirements of the Regulations.

All bridge and culvert projects should consider any H&H studies of nearby dams. Studies of all state-regulated dams are to be completed by the year 2020. These studies typically include a hydrologic and dam break analyses and inundation mapping with flows computed to several bridge sites. Data and results of these studies should be referenced to see if any information is applicable to the bridge site.

The designer must also consider how dams might impact sediment transport conditions in downstream reaches (possibly affecting stream stability and scour at infrastructure) and tailwater design conditions in upstream reaches.

104.3.3.1 *Sizing*

Occasionally bridges impact or are impacted by dams. Spillway design must take into consideration field survey data, drainage areas, reservoir capacity (from elevation and storage data), tidal influences, magnitude of peak in-flows for the design storm (considering frequency mixing), Spillway Design Flood (SDF), the Probable Maximum Flood (PMF), required freeboard below the top of the reservoir, detention or retention structures, water surface profiles, anticipated future development, and breach damage potentials.

The significant range and nature of the influences that apply to normal H&H analyses also apply to spillway design. The designer is referred to Title 7 Natural Resources & Environmental Control of the Delaware Administrative Code, 5000 Division of Soil and Water Conservation, 5103 Delaware Dam Safety Regulations for the dam hazard classification, SDF, and other requirements. The designer is also referred to various publications of the USACE and to the U.S. Bureau of Reclamation (USBR) *Design of Small Dams* (1987) publication concerning design requirements.

The design storm for spillway design should be based on a risk evaluation as described in *Section 104.8.4 – Risk Assessment or Analysis*. The design storm must be approved by the Bridge Design Engineer. The minimum design storm for spillway design is the 100-year storm. Provisions should be made for drainage of the pond.

Typically, HEC-RAS (River Analysis System), HEC-HMS (Dam Breach Routine), or HEC-1 (Flood Hydrograph Package) software is used by the designer for dam/reservoir analysis. Critical to any spillway design are the breach analysis, inundation area mapping, and flood damage estimates, including estimates for economic losses and loss of life. Care must be taken not to affect existing water levels in the new design. Changes could have detrimental effects on adjacent properties.

104.3.3.2 *Site Conditions and Bridges Near Non-regulated Dams*

Dams attenuate flow, reducing the inflow to a reduced outflow, and cause backwater behind the impoundment. Bridges near nonregulated dams need to have considered the effects of the dam and the storage area behind it. For bridges or culverts below nonregulated dams, a determination should be made as to whether the dam will attenuate the flows. If the dam does, a storage-indication routing must be performed using a program such as HEC-HMS or HEC-1, and the attenuated outflow from the dam or reservoir should be used to evaluate the

waterway opening. For bridges above nonregulated dams or reservoirs, the backwater or ponding area should be evaluated to see if it affects the capacity of the waterway opening.

104.3.3.3 *Shape/Material*

Bridge shape and material would be the same as the shape and material for bridges not affected by dams and are discussed in Section 107 – *Final Design Considerations – Substructure*.

104.3.3.4 *Dam Safety Regulations*

Any work with a dam or spillway should be coordinated with DNREC's Division of Watershed Stewardship, Dam Safety Program.

104.3.4 Tidal Hydraulics – Bridges and Culverts

Tidally affected river crossings are characterized by both river flow and tidal fluctuations. From a hydraulic standpoint, the flow in the river is influenced by tidal fluctuations that result in a cyclic variation in the downstream control of the tailwater in the river estuary. The degree to which tidal fluctuations influence the discharge at the river crossing depends on such factors as the relative distance from the ocean to the crossing, riverbed slope, cross-sectional area, storage volume, and hydraulic resistance. Although other factors are involved, relative distance of the river crossing from the ocean can be used as a qualitative indicator of tidal influence. At one extreme, where the crossing is located far upstream, the flow in the river may only be affected to a minor degree by changes in tailwater control due to tidal fluctuations. As such, the tidal fluctuation downstream will result in only minor fluctuations in the depth, velocity, and discharge through the bridge crossing. Therefore, an analysis of bridges or culverts in tidal areas needs to consider these processes.

104.3.4.1 *General*

There are several circumstances in which the potential for tidal impacts is significant.

Channel migration of tidal streams is a particular problem. Tidal hydraulics are produced by astronomical tides and storm surges and are sometimes combined with riverine flows. Storm surges are produced by wind action and rapid changes in barometric pressure. The driving force in riverine hydraulics is the gravitational force down the topographic slope of the stream. In tidal hydraulics, the driving force is the rapidly changing elevation of the tide and wind setup. For sites located near the coast there are three potential hydraulic conditions:

1. Structure hydraulics is riverine controlled and not impacted by tide/storm surge;
2. Structure hydraulics is tidally influenced in that the tailwater condition is influenced by the tide/storm surge, but there is no flow reversal through the structure; and
3. Structure hydraulics is tidally controlled in that flow reverses through the structure during tide/storm surge.

Tidal gages, current FEMA mapping, and historic data can be used to evaluate whether the structure is riverine, tidally influenced or tidally controlled. The size of the bridge opening may be controlled in a case of incoming (flood) tidal flows and peak storm discharge. Another consideration that may control the size of the opening is the storm surge at peak flood tidal

flows. In the same manner, scour of the stream bottom is a concern on outgoing (ebb) tidal flows. These and other combinations of tidal and storm flows must be considered in the sizing and design of a structure. Historic aerial photographs dating back as early as possible should be studied to determine the direction and speed of channel migration in the vicinity of the proposed bridge.

In tidally controlled areas, bridge lengths are generally controlled by wetland considerations rather than hydraulics. The primary purpose of hydraulic analyses for bridges in tidal areas is typically to establish the grade of the bridge and to determine the scour depths around the substructure. Exceptions to this rule are where an opening is being created or increased in an existing causeway or where a culvert is used. In these cases, the opening must be sized so that the velocities through the opening will not create scour problems. A significant head difference can develop across a causeway due to either the tide or wind setup. A sufficient opening should be provided to relieve this difference. A detailed analysis should be conducted to correctly size the opening.

Where the stream is influenced or controlled by tidal fluctuations at the structure location, the most critical of the following three hydraulic scenarios should be used to analyze backwater elevations and/or scour conditions. The most critical scenario for the waterway opening design (backwater elevations) may not be the most critical scenario for scour analysis (velocity analysis).

Scenario 1: A steady-flow scenario with design upland flow (from the stream or river) for the hydraulic design event and the scour design event. The overtopping event and 100-year event may be required for projects in New Castle County. The downstream boundary is set to the MHW elevation of the tidal receiving water daily astronomical tide. Note that the downstream MHW elevation may be higher than the roadway overtopping elevation, in which case no overtopping flood profile will result from Scenario 1.

Scenario 2: A steady-flow scenario with design upland flow (from the stream or river) for the hydraulic design event and the scour design event. The overtopping event and 100-year event may be required for projects in New Castle County. The downstream boundary is set to the MLW elevation of the tidal receiving water daily astronomical tide. Note that the overtopping flood may be higher than the 100-year flood event, in which case the overtopping flood is not considered under Scenario 2.

Scenario 3: An unsteady-flow scenario with the source of flooding being the ebb and flood tides from the tidal receiving water (no upland flow from the stream or river). Downstream boundary conditions are the design, 100-year, and 200-year storm surge hydrographs from the tidal receiving water as well as the daily astronomical tide hydrograph, which generates the overtopping flood event.

The astronomical high- and low-tide elevations (MHW and MLW) and the design storm surge hydrographs should be calculated based on the approach described in the FHWA's HEC-25, *Highways in the Coastal Environment* (2008). The unsteady HEC-RAS model under Scenario 3, "no upland flow," should be simulated for a total period of 60 hours, which comprises the entire surge period in Delaware. Stillwater elevations of the tidal receiving water can be obtained from FEMA's FISs.

104.3.4.2 *Use of Qualified Coastal Engineers*

If coastal hydraulics are significant to the bridge or culvert design, a qualified coastal engineer should review the complexity of the tidal conditions to determine the appropriate level of coastal engineering expertise needed in the design. Conditions that typically require direct attention by a coastal engineer are as follows:

1. Hydraulic analysis of interconnected inlet systems
2. Analysis of inlet or channel instability, either vertically or horizontally
3. Determination of design wave parameters
4. Prediction of overwash and channel cutting
5. Design of countermeasures for inlet instability, wave attack, or channel cutting
6. Prediction of sediment transport or design of countermeasures to control sediment transport
7. Assessment of wave loading on bridges and other structures

104.3.4.3 *Tidal Hydraulic and Scour Analysis*

FHWA's HEC-18, *Evaluating Scour at Bridges* (2012c), Chapter 9 contains three levels for tidal hydraulic analysis and scour. Level 1 includes a qualitative evaluation of the stability of the inlet or estuary, estimating the magnitude of the tides, storm surges, and flow in the tidal waterway and attempting to determine whether the hydraulic analysis depends on tidal or river conditions, or both. Level 2 represents the engineering analysis necessary to obtain the velocity, depths, and discharge for tidal waterways to be used in determining long-term aggradation, degradation, contraction scour, and local scour. In Level 2 analyses, unsteady one-dimensional (1-D) or quasi two-dimensional (2-D) computer models may be used to obtain the hydraulic variables needed for the scour equations. For complex tidal situations, Level 3 analysis using physical and 2-D computer models may be required. The Level 1, 2, and 3 approaches are described in more detail in HEC-18.

For additional information to support the analysis and modeling of scour for bridges crossing tidal waterways, refer to the second edition of FHWA's HEC-25, *Highways in the Coastal Environment* (2008; see Sections 9.7 and 9.8). For additional information on scour, see *Section 104.4 – Scour Evaluation and Protection*.

104.3.4.4 *Tidal Modeling*

Two-dimensional hydrodynamic modeling is an important tool for design water levels, flows, and scour depths at tidally influenced bridge crossings. This tool is particularly useful when examining coastal bridges, since the design flows are often influenced by the incoming tide. For estuaries with large or vegetated floodplains, where the simple tidal prism method is overly conservative due to high-flow resistance, dynamic modeling is most appropriate. Dynamic modeling is also most appropriate in the case of large bays where an assumed level water surface is overly conservative or where wind effects are significant. If conditions warrant, DelDOT may require a tidal analysis.

104.3.4.5 *Freeboard for Tidal Bridges*

Bridges on tidal streams will be designed to protect the bridge structure itself. Often, much of the surrounding land and the approach roadways will be inundated by relatively frequent (10- to 25-year) tidal storm surges. The recommended design freeboard for bridges in these areas is 2.0 feet above the 10-year high-water elevation, including wave height), or the results of the analysis in scenario 3 in *Section 104.3.4.1 – General*, whichever is greater. It is also recommended that the bottom of all interior bent cap elevations be above the extreme high tide. The finished grade of the bridge will be set based on this recommendation, navigation clearances, the approach roadways, topography, and practical engineering judgment. If these conditions are not currently met with an existing structure, improvements to the proposed structure should be considered and evaluated.

The selection of a design water level can be one of the most critical coastal engineering decisions for the design of tidal bridges and structures. For example, the design water level often controls the design wave height, stone size, and extent of armoring on coastal revetments. Also, wave loads on elevated bridge decks are extremely sensitive to water level. Essentially, the water level dictates where waves can reach and attack.

It should be noted, that final freeboard should be chosen to be site specific and the choice should be based on practical judgment. Design water level decisions should be addressed using the traditional risk-based approach of a "design return period," which is common in hydraulic engineering. For example, the 100-year storm surge level is the surge elevation with a 1 percent annual risk of exceedance. Each year, there is a 1 percent chance that a storm surge of this magnitude (or greater) will occur. Some coastal designs may justify a lower return period (e.g., a 25-year or 50-year return period) in certain areas, balancing the greater risks affiliated with such design with engineering and economic considerations. The selection of the design storm surge SWL (still-water-level) can be based on an analysis of historic storm surge elevations at the specific site or on an analysis that incorporates site-specific modeling of historical (hindcast) storm surges. Evacuation routes should be evaluated for access during events that require evacuation. HEC-25 provides more detail on the design of bridges and culverts in tidal areas.

104.3.4.6 *Sea Level Rise*

In accordance with Executive Order 41, all state agencies must incorporate measures for adapting to increased flood heights and sea level rise in the siting and design of projects for construction of new structures and reconstruction of substantially damaged structures and infrastructure. Such projects must be sited to avoid and minimize flood risks that would unnecessarily increase state liability and decrease public safety.

Construction projects should also incorporate measures to improve resiliency to flood heights, erosion, and sea level rise using natural systems or green infrastructure to improve resiliency wherever practical and effective; if the structures are within an area mapped by DNREC as vulnerable to sea level rise inundation, the projects must shall be designed and constructed to account for sea level changes anticipated during the lifespan of the structure in addition to FEMA flood levels; and all state agencies must shall consider and incorporate the sea level rise scenarios set forth by the DNREC Sea Level Rise Technical Committee into appropriate long-range plans for infrastructure, facilities, land management, land use, and capital spending.

104.3.4.7 *Tidal Hydraulics References*

The following models, studies, and reports should be referred to as appropriate:

1. HEC-18, *Evaluating Scour at Bridges, Fifth Edition* (FHWA, 2012) (tidal prism method);
2. HEC-25, *Highways in the Coastal Environment, Second Edition* (FHWA, 2008);
3. HEC-25, *Highways in the Coastal Environment – Assessing Extreme Events* (FHWA, 2014);
4. UNET, RMA-2, or ADCIRC models;
5. Any of the various tidal models for Chesapeake and Delaware Bays in combination with the nontidal flow calculated above to produce the maximum flood, which does not overtop the roadway or structure;
6. Existing FEMA studies; or
7. Existing Coastal Engineering Research Center reports.

104.3.5 Hydraulics Methodologies and Software

Listed and described below are hydraulic models typically used in the design of culverts and bridges. For a hydraulic analysis that would involve revisions to FEMA's Flood Insurance Rate Maps, selection of the hydraulic model should be coordinated with FEMA.

104.3.5.1 *HEC-RAS*

HEC-RAS is a Windows-based program that performs 1-D open channel analysis for steady or unsteady flow, gradually varied flow, sediment transport-mobile bed modeling, and water temperature analysis in both natural and man-made river channels. It is the preferred program for analysis of DelDOT bridges. Information from this program is used to make WSE and freeboard calculations. Some HEC-RAS capabilities include the modeling of water surface profiles in both subcritical and supercritical flows around various obstructions, such as bridges, culverts, weirs, and structures in the floodplain.

HEC-RAS is the recommended model for performing hydraulic analysis of steady, gradually varied (longitudinal), 1-D open channel flow. HEC-RAS includes a culvert module that is consistent with HDS-5 and HY-8. HEC-RAS applies conservation of momentum as well as energy and mass in its hydraulic analysis. HEC-RAS includes all the features inherent to HEC-2 and WSPRO plus several friction slope methods, mixed flow regime support, ice cover, quasi 2-D velocity distribution, bank erosion, riprap design, stable channel design, sediment transport calculations, and scour at bridges. HEC-RAS, HEC-2, and HY-8 do not produce identical results. For detailed information on a comparison of HEC-RAS to HEC-2, see Appendix C of the *HEC-RAS River Analysis System Hydraulic Reference Manual*.

The bridge scour routines in the hydraulic design module of HEC-RAS should not be used for bridge scour computations or to compute scour depths. However, HEC-RAS allows the user to input nondefault parameters into the scour computations, which can be a useful check. The designer should exercise caution when using HEC-RAS output parameters other than

velocities in scour computations. The designer should request that the appropriate cross sections be surveyed to provide for scour considerations.

104.3.5.2 *HY-8*

Culvert hydraulic computations should follow the standard FHWA procedures for conventional culverts described in HDS-5. The HY-8 computer program applies the theories and principles of HDS-5 and HEC-14. HY-8 automates culvert hydraulic computations and includes a routine for analysis and design of culverts with improved inlets and energy dissipators. HY-8 can perform computations associated with tailwater elevations, road overtopping, hydrographs, simple flood routing, and multiple independent barrels. HY-8's most convenient features are its well-designed reports and plots, especially the culvert performance curves and the tailwater rating curves. Caution should be used when using HY-8 if a significant backwater is present at the outlet due to downstream conditions; if that is the case, a rating curve may be more appropriate to represent the downstream backwater.

104.3.5.3 *Two-Dimensional Hydraulic Models*

In certain complex situations, 1-D models may not be able to adequately model the situation. In this case, 2-D models are typically employed. Examples of acceptable 2-D hydraulic modeling programs are the TUFLOW Program and the USBR SRH-2D hydraulic model; both programs interface with Aquaveo's SMS (Surface-Water Modeling System) software. The FHWA Hydraulics Team has adopted the USBR SRH-2D hydraulic model, which includes the development of several new modeling features. SRH-2D uses a hybrid irregular mesh that accommodates arbitrarily shaped cells. A combination of quadrilateral and triangular elements may be used with varying densities to obtain the desired detail and solution accuracy in specific areas of interest. In other words, the entire model mesh does not need to have a high density throughout the entire model to get a high resolution of results at a bridge or other structure. This flexibility allows for greater detail in specified areas without compromising computing time. Second, SRH-2D uses a numerical solution scheme that is impressively robust and stable. The element wetting and drying issues that plagued many FST2DH (FESWMS) models are no longer a problem. Together, the improved SRH-2D model and custom SMS interface provide a powerful tool for transportation hydraulics.

The TUFLOW model was developed by BMT WBM Pty Ltd in Australia. TUFLOW offers 1-D and 2-D flood and tide simulation software. TUFLOW is a finite difference model that can handle a wide range of hydraulic situations, including mixed flow regimes, weir flow, bridge decks, box culverts, and robust wetting and drying. 2-D models are useful in situations of flows with significant horizontal velocity components other than in the downstream direction (i.e. 2-D flow patterns) as well as situations with time-variant flow patterns such as those in tidal environments.

Examples of hydraulic conditions where a 2-D model may be needed are outlined below; however, this list is not all-inclusive (for further information, refer to HDS-7):

1. The stream slope is very flat, and bridge piers cause localized effects on WSEs. The 1-D model will average these localized increases in WSE across the entire cross section and apply the calculated WSE increase across the entire floodplain width, which is not realistic. The 1-D model may also overestimate the magnitude and upstream extent of the pier-induced WSE increase.

2. Hydraulics at the project site are affected by a confluence that changes location for different flood events and cause 2-D characteristics in the floodplain.

3. Flow is split between multiple structures across a wide floodplain.

4. A structure is on a severe channel bend (making the velocity vary between the inside and outside of the bend), and scour is a major concern.

5. A project is anticipated to cause WSE increases in a highly developed area, and flooding impacts need to be more accurately defined.

6. Tidal areas.

104.4 Scour Evaluation and Protection

Scour is the result of the erosive action of running water, excavating and carrying away material from the bed and banks of streams. Every bridge over a waterway should be evaluated as to its vulnerability to scour in order to determine the appropriate protective measures. Most waterways can be expected to experience scour over a bridge's service life. The need to ensure public safety and to minimize the adverse effects stemming from bridge closures requires the best effort to improve the state-of-practice of designing and maintaining bridge foundations to resist the effects of scour.

The reference for scour investigation is HEC-18. The intent of HEC-18 is to establish methods for estimating the various scour components for use in conjunction with engineering judgment to determine the total potential depth of scour. In addition, FHWA's HEC-23, *Bridge Scour and Stream Instability Countermeasures* (1997), contains useful information on the selection and design of measures to minimize the potential damage to bridges and other highway components at stream crossings. For bridges that are tidally impacted, the FHWA's HEC-25, *Highways in the Coastal Environment* (2008) and HEC-25, *Volume 2, Highways in the Coastal Environment: Assessing Extreme Events* (2014), are the primary references, as discussed in *Section 104.3.4 – Tidal Hydraulics – Bridges and Culverts*.

Incipient motion is where hydrodynamic forces acting on a grain of sediment reach a value that, if increased slightly, will move the grain.

Clear-water scour occurs when the bed material sediment transported in the uncontracted approach flow is negligible or the material being transported in the upstream reach is transported through the downstream reach at less than the capacity of the flow. In this case, the scour hole reaches equilibrium when the average bed shear stress is less than that required for incipient motion of the bed material.

Live-bed scour occurs when there is streambed sediment being transported into the contracted section from upstream. In this case, the scour hole reaches equilibrium when the transport of bed material out of the scour hole is equal to that transported into the scour hole from upstream.

104.4.1 Scour Investigation

Scour investigations must be completed for all structures crossing waterways. This investigation should be included with the foundation submission and H&H Report. The investigation should contain scour calculations per *Section 104.4.4 – Design Considerations*.

The investigation should also include site inspections, including inspections of nearby structures as necessary and interviews with DelDOT maintenance personnel in charge of post-event inspections. Scour investigations must be developed using a multidisciplinary approach involving the hydraulics engineer, the geotechnical engineer, structural engineer, and coastal engineer (if needed per *Section 104.3.4.2 – Use of Qualified Coastal Engineers*). The investigation is required to evaluate and design bridge foundations and scour countermeasures. For bridge replacement projects, a determination of historical scour at the existing structure is important. The evaluation of historical scour can be based on previous bridge inspection reports and/or geotechnical assessments of the streambed materials. For most new bridges, pier scour will be accommodated by adjusting the pier design in cooperation with the geotechnical and structural engineers, and abutment scour will be mitigated with countermeasures. However, modifying the size of the opening to reduce the total scour or minimize countermeasures may be a consideration depending on the bridge site. For existing bridges, pier and abutment scour are mitigated with hydraulic or structural countermeasures or monitoring. NCHRP Web-Only Document 181, *Evaluation of Bridge Scour Research – Abutment and Contraction Scour – Processes and Prediction* (2013) is an additional resource for abutment and contraction scour abatement.

104.4.2 Scour Components

The current published guidelines provide that bridge scour be evaluated as interrelated components, including:

1. Long-term scour (aggradation or degradation of the stream channel)
2. Contraction scour, including vertical pressure scour if applicable
3. Local scour (pier and abutment)

In addition, lateral migration of the channel must be assessed when evaluating total scour at bridge piers and abutments. The summation of each scour component depth is defined as the total scour depth. Design considerations and applications related to the various scour components are covered in *Section 104.4.4 – Design Considerations*.

The FHWA hydraulic toolbox has scour calculators that follow the procedures presented in HEC-18. They can be found online at:
http://www.fhwa.dot.gov/engineering/hydraulics/software.cfm.

104.4.2.1 *Long-Term Scour*

Aggradation and degradation are long-term changes in stream channel elevation. Degradation is the scouring of bed material due to increased stream sediment transport capacity, while aggradation is the deposition of bedload. The effects of aggradation or degradation changes are not the same as local scour or erosion because they extend greater distances along the streambed and are not localized to the structure of interest. Vertical stream morphology changes take place slowly but well within the service life of a bridge. It is necessary to look at where the river or channel bed has been and where it is now, and to anticipate its position in the future. Channel alteration, changes in upstream land use, streambed mining, and the construction of dams and control structures are the major causes of degradation problems. Long-term profile changes can result from streambed profile changes that occur from aggradation and/or degradation. Forms of degradation and aggradation should be considered

as imposing a permanent future change for the streambed elevation at a bridge site where they can be identified.

104.4.2.2 *Contraction Scour*

Contraction scour equations are based on the principle of conservation of sediment transport (continuity). As scour develops, the shear stress in the contracted section decreases as a result of a larger flow area and decreasing average velocity. For live-bed scour, maximum scour occurs when the shear stress reduces to the point that the sediment transported in equals the bed sediment transported out and the conditions for sediment continuity are in balance. For clear-water scour, the transport into the contracted section is essentially zero, and maximum scour occurs when the shear stress reduces to the critical shear stress of the bed material in the bridge cross section.

Contraction scour occurs when the flow area of a stream at flood stage is reduced, either by a natural contraction of the stream channel or by a bridge. It also occurs when overbank flow is forced back to the channel by roadway embankments at the approaches to a bridge. Contraction scour depths should be calculated using the live-bed and/or clear-water equations. Pressure flow scour (vertical contraction scour) should be calculated for all structures under pressure flow, according to HEC-18 Section 6.10.

104.4.2.3 *Local Scour*

At piers or abutments, local scour is caused by the formation of vortices at their base. The horseshoe vortex at a bridge pier results from the pileup of water on the upstream surface of the obstruction and subsequent acceleration of the flow around the nose of the pier. The action of the vortex removes bed material from around the base of the pier. The transport rate of sediment away from the base region is greater than the transport rate into the region; consequently, a scour hole develops.

Local scour depths for piers and unprotected abutments should be calculated using equations that apply to the sites and design conditions. Because the local scour equations tend to overestimate the magnitude of scour at abutments, they are generally used only to gain insight into the scour potential at an abutment. The NCHRP 24-20 Abutment Scour Approach presented in HEC-18, Section 8.6.3, calculates the total abutment scour, including contraction scour. The NCHRP 24-20 method may provide more reasonable estimates of abutment scour, as it does not require the effective embankment length, which can be difficult to determine. The equations are more physically representative of the abutment scour process, and the equations predict total scour at the abutment rather than the abutment scour component that is then added to the contraction scour.

Local pier scour depth should be calculated using the HEC-18 pier scour equation (Chapter 7.2, HEC-18) for live-bed and clear-water conditions when the pier footing is not exposed to the flow. The pier width in the HEC-18 equation should be the pier width perpendicular to the flow direction for the frequency event being considered. When there is a history of debris accumulation on bridge piers, scour from debris on piers should be calculated with Equation 7.32 of HEC-18; engineering judgment, bridge inspection records (including underwater inspection reports), and maintenance records are required to estimate several variables. Scour for complex pier foundations should be calculated in accordance with the procedures described in Section 7.5 of HEC-18. Local pier scour for wide piers in fine bed material should

be calculated with the Florida Department of Transportation pier scour methodology (Chapter 7.3, HEC-18).

104.4.3 Scour Flood Magnitude

The scour design flood and the scour design check flood should be evaluated in the scour design for new bridges and existing bridges that have a scour plan of action (POA) or where emergency maintenance countermeasures are required. For the scour design flood, the stability of the bridge foundation should be investigated using the service and strength limit states. The scour check flood should be used as the scour design flood. The scour design flood and check flood are determined from Table 104-2.

Table 104-2. DelDOT Scour Design Floor and Check Flood

Hydraulic Design Flood Frequency from Figure 104-5	Scour Design (QS) and Check Flood Frequency (QC)
Q25	Q100
Q50	Q200

Note a pressure-flow event of a lesser recurrence interval may cause the worst-case scour condition and should be considered at sites with pressure-flow conditions. Both tidal and nontidal bridges over waterways with scourable beds should withstand the effects of scour from the scour design check flood without failing. For the check flood for scour, the stability of a bridge foundation must be investigated for scour conditions resulting from a designated flood storm surge, tide, or mixed population flood, and must be designed to be stable for the extreme event limit state.

If the site conditions due to ice or debris jams and low tailwater conditions near stream confluences dictate the use of a more severe flood event for either the design or check flood for scour, the designer may use the more severe flood event.

104.4.4 Design Considerations

Bridge foundations must be designed to withstand the effects of scour for the worst conditions resulting from floods. The geotechnical analysis of bridge foundations should be performed on the basis that all streambed material in the scour prism above the total scour line for the designated flood (for scour) has been removed. No scour analysis for a pipe or box culvert is required. For rigid frames less than a 25-foot span, scour may be neglected if scour countermeasures are installed.

The total scour depth for piers is the sum of the contraction scour (lateral and vertical contraction scour), local scour (which includes both the pier scour and the scour from debris on piers, if applicable), and long-term channel degradation, if applicable. Footings are to be designed based on the total scour depth obtained from the scour design flood.

In general, foundations should be designed to be stable without relying on scour countermeasures. The only exception to this is when designing for local scour at abutments. The option exists to consider riprap countermeasures in abutment depth if scour depths are unreasonable based on the local abutment scour equations. Engineering judgment should be

used. If the full scour depth is not used to set the abutment foundation, then both the abutment foundation and the scour countermeasure must be designed to be stable after the effects of the estimated long-term degradation and contraction scour.

104.4.4.1 *Scour Due to Lateral Movement*

Pier and abutment foundations must be designed for the maximum total scour to account for channel and thalweg shifting. The scour due to lateral movement or shifting of the stream should be evaluated for bridges on floodplains with a history of lateral movements of the stream from one side of the floodplain to the other through geologic time. FHWA's HEC-20, *Stream Stability at Highway Structures* (2012d) and HEC-23, *Bridge Scour and Stream Instability Countermeasures* (1997) should be referenced for lateral stream movement and instability issues. For multi-span bridges, a scour prism plot (Chapter 8, HEC-18), which illustrates the total scour depth at any location in the bridge opening, and a site evaluation should be included with the scour analysis in the H&H and Foundation Reports. Refer to HEC-18, Appendix D, for an example of a total scour prism plot.

104.4.4.2 *Spread Footings*

Spread footings on erodible material should be considered only if scour calculations are completed and can be corroborated by a site inspection and by the performance of spread footings in nearby structures that have survived major floods, or only if properly designed protective measures are provided. Otherwise, the bridge foundation should be extended to sound bedrock or supported on piles. If a foundation is supported on piles, the pile design must account for the estimated depth of scour and include a check of column strength for the unsupported length.

For spread footings set below scour depth, the excavation should be backfilled with durable rock riprap protection. Where the history of the bridge site indicates that the channel becomes restricted due to accumulation of debris or ice, the constricted opening in the scour investigation should be considered.

104.4.4.3 *Dams and Backwater*

Where the maximum high-water elevation at the structure is due to a backwater condition resulting from the stage of a downstream waterbody, the scour investigation should consider the calculations based on a 100-year flood resulting from the watershed upstream from the structure, assuming no backwater from a downstream confluence.

Where dams exist upstream from the structure, the design flood for the dam and its spillway should be considered in the scour investigation. In addition, if the road is expected to be in service in an emergency event according to the dam's EAP, then the sunny-day dam break flow should also be considered in the scour investigation.

104.4.4.4 *Streambed Material*

The D50 value is important in scour equations. The D50 is taken as an average of the streambed material size in the reach of the stream just upstream of the bridge. It is a characteristic size of the material that will be transported by the stream. Normally, this would be the bed material size in the upper 1 foot of the streambed, which may capture the armor layer (i.e., larger, more uniform particles) of the stream, if present. Significantly

underestimating the D50 value may result in overly conservative scour depths. Therefore, acceptable means to estimate D50 include:

1. Visual inspection – Appropriate for all types of bed materials. Field tools (e.g., sand gage card, gravelometer, wire screen) are readily available to assist the hydraulic engineer in streambed particle size determination.

2. Sieve analysis from volume/bulk samples.

The D50 should typically not be estimated from soil surveys or soil borings only. When a boring is taken within the channel area, it will sample a small-diameter core (2 to 4 inches) through the bed material and soil layers, typically down to bedrock. The boring diameter may limit the D50 measurement because any sediment size greater than the boring diameter will not be captured. If the D100 particle size is less than the core diameter and the sample is taken in the stream channel, the soil borings may provide a reasonable D50. Additionally, the soil boring locations are determined based on the substructure unit's (e.g., a pier) location and are not representative of the streambed material within the entire channel section.

However, soil borings are a critical component of a site investigation to determine critical soil parameters for scour estimates. Soil borings help determine soil layer stratification (differential erosion rates) and can be used for grain size analysis for finer-grained soils. Poor scour estimates can often be due, in part, to poor soil classification and the use of surficial samples only for soil properties.

104.4.4.5 *Scour in Cohesive Soils*

The clay content in soil increases cohesion, and relatively large forces are required to erode the riverbed. Higher pulsating drag and lift forces increase dynamic action on aggregates until the bonds between aggregates are gradually destroyed. Aggregates are carried away by the flow. Dr. Jean-Louis Briaud at Texas A&M University has proposed the SRICOS-EFA (Scour Rate in Cohesive Soil – Erosion Function Apparatus) method of scour measurement in cohesive soils (NCHRP, 2003).

1. In cohesive soils such as clay, both local scour and contraction scour magnitudes may be similar. However, scour takes place considerably later than in the noncohesive sand.

2. Scour analysis methods are different for cohesive and noncohesive soils.

3. Bridge foundations supported by cohesive soils resist erosion for a much longer period than usually calculated, and may result in a longer life of bridge.

The bed material may be comprised of sediments (alluvial deposits) or other erodible materials. If bed materials are stratified, a conservative approach needs to be adopted regarding the risks of the scour breaking through the more resistant layer into the less resistant layer. Scour analysis of bridge piers and abutments in cohesive soils can be carried out on the basis of the NCHRP 516 report, *Pier and Contraction Scour in Cohesive Soils* (2004) and the procedures for scour in cohesive soil in HEC-18.

104.4.4.6 *Scourability of Rock*

The scour potential of rock may be evaluated by following the procedure for rock quality designation (RQD) in the FHWA Memorandum *Scourability of Rock Formations* (1991) to

determine scourability, and by following the latest information on procedures for scour in rock in HEC-18, Sections 4.2.3, 4.6 and 4.7. Section 6.8 describes how to compute contraction scour in erodible rock, while Section 7.13 discusses pier scour in erodible rock and provides calculation examples. The designer should also reference NCHRP Report 717: *Scour at Bridge Foundations on Rock* (2012). Section 3.4 of NCHRP Report 717, Modes of Rock Scour, identifies four erosion processes in natural rock-bed channels: dissolution of soluble rocks, cavitation, quarrying and plucking of fractured rocks, and abrasion of degradable rocks.

The following criteria represent the values to define rock quality and scourability of rock:

1. The RQD value is a modified computation of the percent of rock core recovery that reflects the relative frequency of discontinuities and the compressibility of the rock mass and may indirectly be used as a measure of scourability. The RQD is determined by measuring and summing all the pieces of sound rock 6 inches (150 millimeters) and longer in a core run and dividing this by the total core run length. The RQD should be computed using NX diameter cores or larger and on samples from double tube core barrels. Scourability potential will increase as the quality of rock becomes poorer. Rock with an RQD value of less than 50 percent should be assumed to be soil-like with regard to scour potential.

2. The primary intact rock property for foundation design is unconfined compressive strength (ASTM Test D2938). Although the strength of jointed rocks is generally less than individual units of the rock mass, the unconfined compressive strength provides an upper limit of the rock mass bearing capacity and an index value for rock classification. In general, samples with unconfined compressive strength below 250 pounds per square inch are not considered to behave as rock. There is only a generalized correlation between unconfined compressive strength and scourability.

3. The slake durability index (SDI as defined by the International Society of Rock Mechanics) is a test used on metamorphic and sedimentary rocks such as slate and shale. An SDI value of less than 90 indicates poor rock quality. The lower the value, the more scourable and less durable the rock.

4. AASHTO Test T104 is a laboratory test for soundness of rock. A soaking procedure in a magnesium and sodium sulfate solution is used. Generally the less sound the rock, the more scourable it will be. Threshold loss rates of 12 (sodium) and 18 (magnesium) can be used as an indirect measure of scour potential.

5. The Los Angeles abrasion test (AASHTO T96) is an empirical test to assess abrasion of aggregates. In general, the less a material abrades during this test, the less it will scour. Loss percentages greater than 40 percent indicate scourable rock.

The other methods described in that memorandum should be used if required. For other soil types, existing surface borings and tests of soil samples should be interpreted.

104.4.5 Scour Countermeasures

In most cases, a scour countermeasure, properly designed and installed in accordance with the procedures outlined in HEC-23, is provided to resist the local scour at abutments. For rigid frames less than a 25-foot span, scour may be neglected if scour countermeasures are installed.

Pier spacing and orientation and abutment design must be designed and balanced with other bridge design concerns to minimize flow disruption and potential scour, subject to navigation requirements. Abutment countermeasures for local scour at abutments consist of measures that improve flow orientation at the bridge face and move local scour away from the abutment as well as revetments and riprap placed on spill slopes. Guide banks are earth or rock embankments placed at abutments.

Rigid frames do not have to be designed with the footing elevation below scour depth when properly designed scour countermeasures are provided. Footing elevations should be placed below the bottom of countermeasure elevation.

104.4.5.1 *Riprap Protection*

The use of a minimum of R-4 riprap is allowed where countermeasure calculations show it is adequate, as long as the riprap is covered by topsoil or CBF as specified in the Standard Specifications. If the riprap is exposed, a minimum of R-5 riprap should be used. Larger riprap may be specified, if it is needed. The riprap in the channel should be covered with a minimum of 1 foot of CBF. Riprap, despite its efficiency, is not recommended as an adequate substitute for foundations or piling located below expected scour depths for the new or replacement bridge.

Slopes in front of stub abutments and rigid frames should be adequately protected, and/or sheeting should be provided to prevent undermining of the abutment and loss of fill. Riprap must always be used to protect abutments from erosion for maintenance purposes, even if it is not required to resist the effects of local scour. The use of concrete slope paving is prohibited; concrete slope paving must be replaced with riprap on any rehab projects where it exists.

Refer to *Section 355.01 – Precast Concrete Box Culvert Details* for scour protection details for box culverts, to Section *350.01 – Pipe Culvert Details* for scour protection for pipes, and to *Section 360.01 – Precast Concrete Rigid Frame Details* for scour protection for rigid frames.

Also, refer to NCHRP Report 587*, Countermeasures to Protect Bridge Abutments from Scour* (2007)*;* HEC-23; and NCHRP Project 24-23, *Riprap Design Criteria, Specifications, and Quality Control* (2006) for additional information.

104.4.5.2 *Guide Banks*

A guide bank is a dike extending upstream from the approach embankment at either or both sides of the bridge opening to direct the flow through the opening. Some guide banks extend downstream from the bridge (also referred to as a spur dike). Guide banks are quite useful where a stream makes a turn into a structure and have been applied successfully for abutment protection in braided, meandering, and straight streams. Flow disturbances, such as eddies and cross-flow, will be eliminated where a properly designed and constructed guide bank is placed at a bridge abutment.

104.4.5.3 *Scour Protection at Culverts*

HEC-14, Chapter 4 of the AASHTO *Highway Drainage Guidelines* (2004), and HEC-23 provide design procedures for the hydraulic design of highway culverts. Included therein are design

examples, tables, and charts that provide a basis for determining the selection of a culvert opening.

1. Footings for any flared wingwalls, provided at the entry and the exit of culverts, will be protected by riprap or alternate armoring countermeasures.

2. For velocities exceeding 12 feet per second, a less constrictive opening should be considered to reduce velocities. Regular monitoring will be required if riprap has been installed at the entry and exit of culverts.

3. Skew of a culvert should be matched to the angle of attack of the stream as much as possible to help alleviate local scour.

4. Wingwall orientation chosen should eliminate sharp corners at entrances that may cause eddies.

See also *Section 107.7.5.4 – Scour Aprons* for additional information on scour protection at culverts.

104.4.6 Scour Evaluation Documentation

The scour evaluation documentation must be included as part of the H&H Report and Foundation Report and should contain the following information:

1. Bridge description — bridge number, type, size, location, and NBI Record Item 113, Scour coding;

2. Executive summary of scour results, conclusions, and any countermeasure recommendations required, with plan and profile views showing scour depths and limits;

3. Scour computations (including computer input and output) that should include scour depths and plotted depths on cross sections and profiles; and

4. Bridge drawings, cross sections, soils information, test results, other miscellaneous data, and references.

The report must contain a scour summary table in accordance with Table 104-3.

Table 104-3. Scour Summary							
	COMPUTED SCOUR DEPTHS (FEET)					PROPOSED ELEVATIONS	
Substructure Unit	Discharge Frequency	Long-term Scour	Contraction Scour	Local Scour	Total Scour	Top of Footing	Bottom of Footing

104.4.7 Scour Plan Presentation

The calculated scour depth elevations are shown on the cross sections and profiles, and the overtopping flood discharge and elevation must be shown on the bridge profile sheets per the Title 23 of the Code of Federal Regulations (CFR) Part 650 and FHWA policy and technical guidance.

The following information will be provided in the Project Notes on the plans:

1. Note stating that the structure has been analyzed for the effects of scour in accordance with the procedures described in HEC-18;
2. Scour design flood flow, frequency, bridge opening velocity, and WSE immediately upstream from the bridge; and
3. Calculated design scour depth, including a plot in cross section and profile.

A sample scour project note is provided in *Section 300 – Typical Bridge Design Detail*.

104.5 Streams

The natural or altered condition of stream channels affects the flow characteristics. Any work being performed, proposed, or completed that modifies a stream channel changes the hydraulic efficiency of the stream and must be studied to determine its effect on the stream both upstream and downstream. The effect on WSEs at the structure site due to modification of a stream's hydraulic characteristics must be determined. The designer should be aware of plans for channel modifications that might affect the stream hydraulics. Similarly, the effects of storm drainage systems and other water-related projects should be investigated. Any modifications that affect stream alignment should be kept to a minimum, particularly for the straightening of meandering streams.

104.5.1 Stream Stability Analysis

Streams upstream and downstream of the bridge or culvert must be stable, and if they are not, stabilization measures must be applied. Erosion is considered to be the loss of material on side slopes and stream banks. Types of stream erosion, which are all interrelated to some degree, include:

1. Scour

2. The natural tendency of streams to meander within the floodplain

3. Bank erosion

4. Aggradation and degradation

The computed velocity is a measure of the potential erosion and scour. Exit velocity from culverts will be computed on the assumptions shown in HDS-5. (HY-8, Culvert Analysis, software based on HDS-5 for the computations should be used.) Average velocity computed on the gross waterway will be the representative velocity for open-span structures, furnished by computer analysis for WSEs.

Examples of highly erodible soil can be found in all areas of the state. Areas of loamy deposits, which are highly sensitive to erosion, are prevalent in Delaware. County NRCS soil maps and field investigations may aid in judging the in-situ material.

The designer must consider the downstream erosion potential in evaluating and sizing the structure. Under some conditions, any additional erosion would be intolerable. Thus, risk considerations should be included in the site study. Stream banks erode regardless of the presence of a highway crossing. Any alteration of erosion potential by a structure must be closely evaluated in judging the adequacy of a design. Designs should consider the angle of attack to the inlet and the direction of discharge of high-velocity flow (i.e., direction should not be into the opposite stream bank).

Streams naturally tend to seek their own gradient through either degradation or aggradation. Degradation is the erosion of streambed material, which lowers the streambed. Aggradation is the transport and deposition of the eroded material to change the streambed at another location. The effect of the structure on degradation or aggradation of a stream must be evaluated in bridge-crossing design.

The designer should evaluate the stability of the bed and banks of the waterway channel, including lateral movement, aggradation, and degradation, using HEC-20. When designing a replacement structure, an evaluation using HEC-20 is not required if existing conditions appear stable and proposed conditions are similar.

104.5.2 Bank Protection

The most common method of bank protection is the use of rock riprap. Factors to consider in the design of rock riprap protection include:

1. Stream velocity

2. Angle of the side slopes

3. Size of the rock

Filter blankets of smaller gradation bedding stone or geotextiles are used under riprap to stabilize the subsoil and prevent piping damage. Riprap bank protection should terminate with a flexible cutoff wall.

The designer should specify a minimum riprap thickness of 18 inches for embankment protection and 24 inches for slope protection along stream banks and for streambeds, or the thickness of the riprap, whichever is greater. Refer to FHWA's FHWA-HI-90-016*, Highways in the River Environment* (1990), and FHWA's HEC-11*, Design of Riprap Revetment* (1989). See *Section 300 – Typical Bridge Design Detail* for typical riprap details and an example of a riprap installation. Typical slope and bank protection and channel lining are shown on Figure 104-7. If the channel velocity (V_s) and the side slopes (horizontal:vertical) are known, Figure 104-8 should be used for riprap sizing where the equivalent spherical diameter is typically referenced as $d_s = 1.25\ D_{50}$.

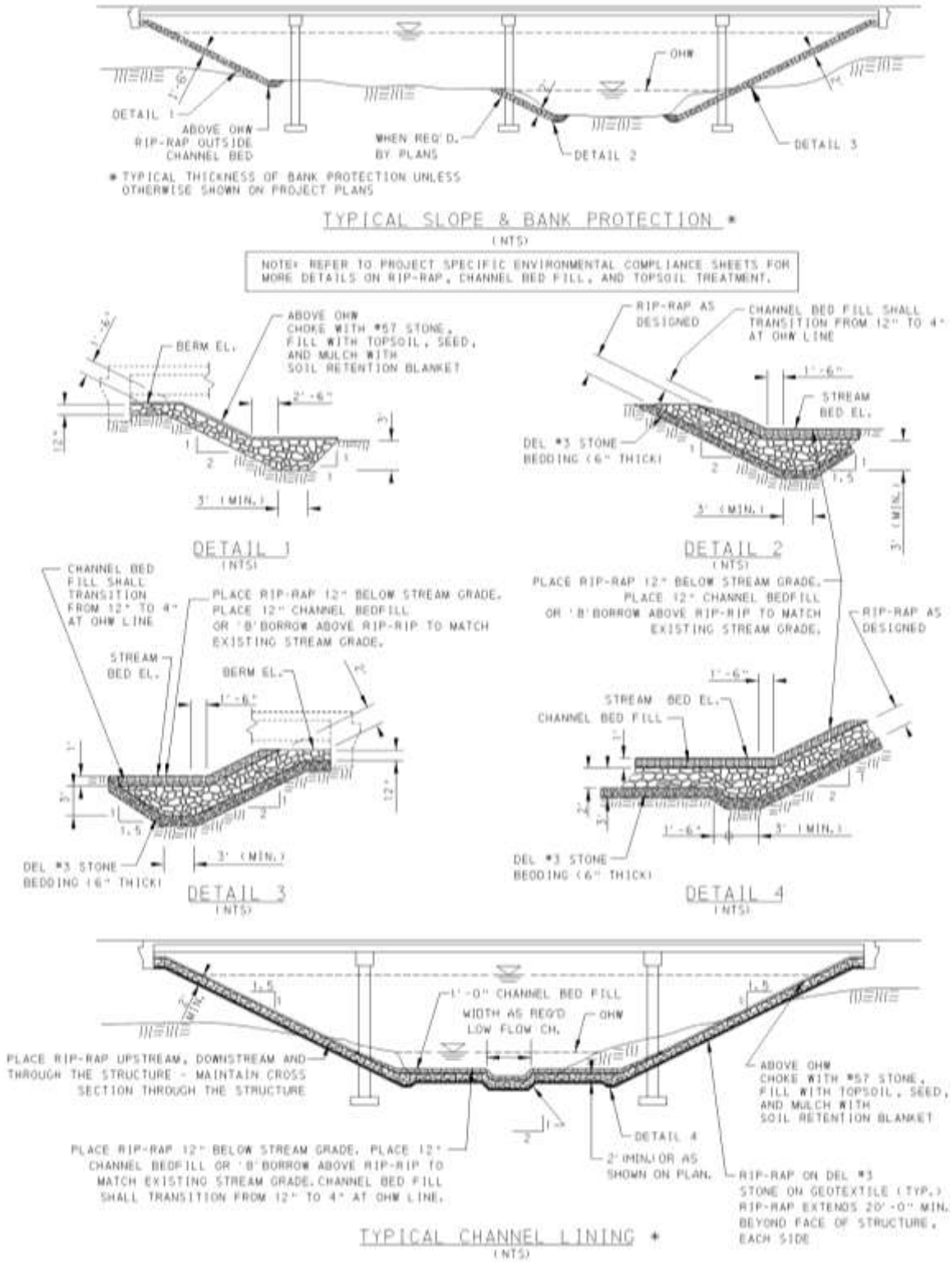

FIGURE 104-7. TYPICAL SLOPE AND BANK PROTECTION AND CHANNEL LINING

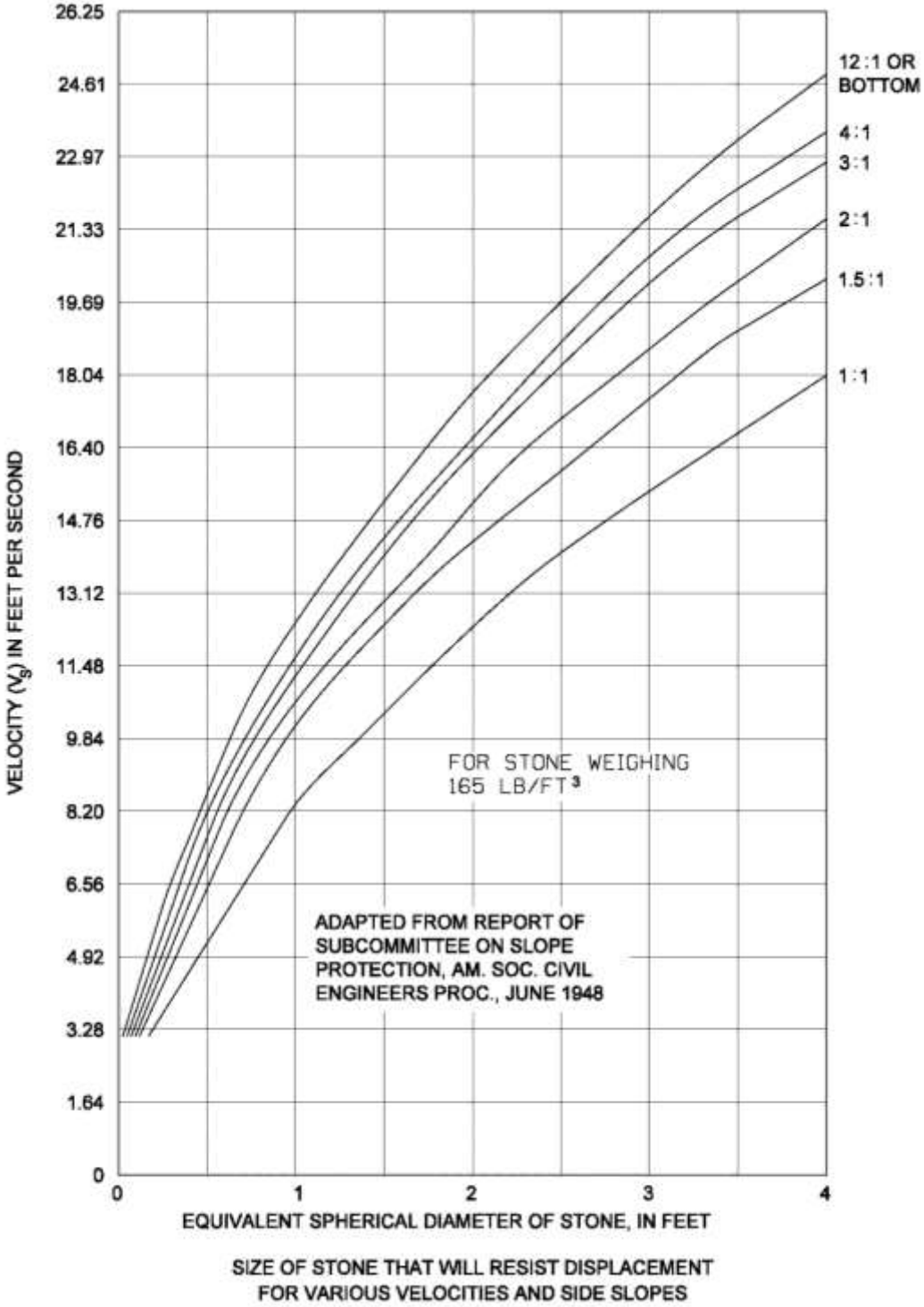

FIGURE 104-8. RIPRAP SIZING BASED ON CHANNEL VELOCITIES AND SIDE SLOPE

104.5.3 Channel Modifications

A channel modification is the physical relocation of the streambed channel. Channel modifications are to be avoided in general, as it difficult to get approval from permitting agencies. However, a channel modification is sometimes the best solution and must be evaluated.

The primary objective in the design of a highway stream crossing is to avoid interruption of road traffic and interruptions in the behavior of the stream.

The preferred procedure for dealing with channel changes is as follows:

1. Establish the nature of the existing stream (slope, section, meander pattern [sinuosity], stage-discharge relationship).
2. Determine limits for changes in the various stream parameters.
3. Duplicate existing conditions where possible, within established change tolerances.
4. Evaluate constructability, considering water table elevations, streambed materials, and site conditions.

For more guidance, refer to AASHTO's *Highway Drainage Guidelines* and FHWA-HI-90-016.

104.5.4 Stream Diversions

When choosing a stream diversion method, multiple factors should be considered: volume of stream flow, structure type, site conditions, sequence of construction, and construction duration or duration needed for diversion. Incorporating the existing structure into the diversion plan should be considered as it often reduces time, impact, and cost. The sequence of construction should minimize the length of time a stream diversion is in place.

The construction sequence plans should show a complete plan for stream diversion and construction sequence for the convenience of contractors who do not have the experience necessary to design their own system. The plans should show a diversion method that maximizes the work area within the easements without adversely affecting the movement of manpower and equipment. The proposed plan should be simple to construct and made from common materials available to every contractor. Item sizes and locations must accurately be shown given consideration for site conditions and environmental impacts.

The contractor may submit alternate plans for stream diversion. The alternate plans must be approved by the Bridge Design Engineer, the Stormwater Engineer, and Environmental Studies group. The submission must clearly state any alternate plans and must demonstrate the capacity to pass the design diversion flow stated on the plans. Alterations may be rejected due to permit restrictions.

Temporary stream diversions should be sized based on Table 104-4. Confidence Intervals should not be used and the quantity of flow designed for the diversion should be clearly stated in the plans.

Table 104-4. Design Storm for Various Construction Periods	
Construction Time	**Design Storm**
1-30 days	Estimate of base flow using surface velocity.[1]
31-90 days	25% of the 2-year storm
91-150 days	50% of the 2-year storm
151 days or more	100% of the 2-year storm

[1] Estimates of base flow should be calculated after significant rainfall to ensure that the pump diversion will be adequate for normal rain events.

In general, pipes are preferred over pumps. Pumping should only be used where the flow is very small (9 cubic feet per second or less, which is generally within the capacity of one 12-inch pump) or where pipes are impractical.

The size of diversion pipes should be specified in the plans. If pumps are used, pump sizes will not be designated in the plans. Weir dimensions and elevations should be noted for sheeting and sandbag dikes. The method for diverting clean water and stabilizing the outfall should be specified. Payment for these items will be included in the lump sum cost of the stream diversion item.

Calculations for wetland and water temporary impacts should be based on the maximum volume anticipated for the diversion method. In many cases, sandbag dikes will be the preferred method to fit this criterion even if the majority of the contractors have steel sheeting available.

104.5.5 Ice and Debris

The quantity and size of ice and debris carried by a stream should be investigated and recorded for use in the design of drainage structures. The times of occurrence of ice or debris in relation to the occurrence of flood peaks should be determined, and the effect of backwater from ice or debris jams or recorded flood heights should be considered in using stream-flow records.

The location of the constriction or other obstacle-causing jams, whether at the site or structure under study or downstream, should be investigated, and the feasibility of correcting the problem should be considered. Maintenance personnel shall be consulted if ice and/or debris problems are expected.

Under normal circumstances, 1 foot of freeboard is sufficient to permit passage of ice flow and debris. When the drainage area produces unusually large amounts of debris, additional freeboard to protect the structure is desirable. At locations where large pieces or quantities of debris are anticipated, the designer should consider increasing the freeboard. Multiple pipe installations, multi-cell boxes, or in-stream piers should be avoided at locations with debris issues.

104.6 Hydrologic and Hydraulic Report

The intent of the H&H report is to document the H&H investigations and recommendations for a new alignment structure or a structure replacement or rehabilitation. The H&H report should be sealed by a registered Professional Engineer.

A recommended table of contents for the report and supporting information (Appendices) are provided in **Appendix 104-4**.

104.6.1 Hydraulic Summary Data Sheet and Definitions

The Hydraulic Summary Data Sheet found in **Appendix 104-3** must be included with all H&H Reports. The summary data sheet is intended to provide a quick overview of the project site, channel and watershed, and existing and proposed structure information and hydraulics.

Descriptions of terms used in the checklist and to represent hydraulic data on plans follow. See Figure 104-2 for a graphical depiction of the definitions.

1. Documentation of **Historic High Water** includes year(s) of occurrence and source of information.

2. **Ordinary High Water** is required information for the "404" permit. From instructions and definitions furnished by the USACE for "404" permit applications, the Ordinary High Water mark as defined by the USACE means the line on the shore established by the fluctuation of water and indicated by physical characteristics (such as a clear, natural line impressed on the bank, shelving, changes in the character of the soil, destruction of terrestrial vegetation, or the presence of litter and debris) or established by other appropriate means that consider the characteristics of the surrounding areas. Ordinary High Water will usually be established by the environmental studies. Where Ordinary High Water is not determined by a survey of the physical characteristics or a visual field inspection, it may be estimated by computation of the normal WSEs at the 50 percent chance rainfall (2-year) frequency (Q_2).

3. **Design Discharge** (Q_{des}) should be computed by the methods noted in this Manual. When other methods are applicable and are used to compute the Design Discharge, it should be noted in the hydraulic report.

4. **Design Headwater**: As a conservative estimate of the headwater for design, the elevation of the water surface under unrestricted conditions at the upstream face of the bridge or culvert is used to compute clearance. It is the assumed condition where the water surface profile is computed at the design discharge (Q_{des}) with gradually varied flow. This computed high-water elevation should always be compared to the high-water elevation of record furnished by the field survey to determine whether an additional grade adjustment should be made for the extreme condition.

5. **Average Velocity** is computed from the gross area at the bridge opening below the design flow depth, i.e., Q/A_n, where A_n is the gross waterway area in the constriction at Design High Water depth. **Design Waterway Provided** is the net flow area below the Design High Water elevation. **Total Waterway Provided** is the net flow area below the bridge. **Total Waterway and Design Waterway** will be the net flow area (i.e., they are deducted from the pier area).

6. **Design Backwater Elevation**: For convenience, the amount of design backwater is measured as shown on the profile section on Figure 104-1, for the computed design discharge (Q_{des}). Although this may not be the exact location of the maximum high water, it is accurate enough to provide a reasonable estimate. For critical locations where the

exact backwater computation might affect the design (e.g., where a FEMA floodway exists), the designer should refer to the methods in HDS-7.

7. The location of the **Overtopping Elevation** for the bridge and approaches may be referred by stationing (e.g., Station 6+95.7) or by distance from the bridge (e.g., 375 feet south of bridge abutment No. 1). The location of the overtopping may occur on the bridge or on an approach. The overtopping roadway elevation may be either the centerline elevation or the high shoulder elevation in a superelevated section.

8. **Freeboard**, as applied to bridge hydraulics, is the vertical distance from the design headwater elevation to the low point of the superstructure. This distance is recorded on the Hydraulic Field Assessment Checklist (Appendix 104-1). Where the design headwater elevation is higher than the low point of the superstructure, there is no freeboard. For culverts, the design headwater elevation is 1 foot below the top of the slope to prevent overtopping. For bridges, freeboard is defined as the clear vertical distance between the water surface and the low point of the superstructure. The preferred minimum freeboard is 1 foot. The designer should increase freeboard above the routinely applied 1-foot criterion in areas where debris and ice could potentially diminish flow conveyance. Coordination with the bridge unit is required if the bridge structure cannot meet the preferred minimum freeboard.

104.7 Plan Presentation

The following hydrological and hydraulic information is required on the plans of structures over streams and should be included in the Project Notes on the General Notes sheet. A sample Hydraulic Data Note is provided in *Section 300 – Typical Bridge Design Detail*.

Hydraulic Data:

1. Drainage Area (square miles)

2. Design Frequency (years)

3. Design Discharge and Q_{100} (cubic feet per second)

4. Existing and Proposed Design Flood Elevation (feet) (cross section just upstream of the structure)

5. Existing and Proposed 100-Year Flood Elevation (feet)

6. Existing and Proposed Waterway Opening (square feet)

Other information that is required in the Hydraulic Report, as directed by the Bridge Design Engineer, includes the information in the H&H Report Hydraulic Data Summary Sheet found in Appendix 104-3.

For tidal areas, the following information should be included:

a. Mean High Water Elevation (feet)

b. Mean Low Water Elevation (feet)

c. Vertical Under Clearance (feet)

Refer to *Section 104.4.7 – Scour Plan Presentation* for plan presentation of scour analysis data. Additional site-specific information, such as the data described in *Section 104.1.4 – Field Data Collection*, may be required and noted on the plans as determined by the Bridge Design Engineer.

104.8 Laws, Policy, Regulations and Permits

The PDM has a summary of DelDOT's policy and an extensive list of environmental laws, regulations, and policies in Appendix B. It also describes streamlining for cooperatively obtaining timely approval for transportation projects. The designer should be familiar with Appendix B before design begins.

104.8.1 FEMA Compliance

Floodplain management regulations are based on Executive Order 11988. A new Executive Order is being developed that will establish Federal flood risk management standards and consider climate change. As these guidelines are developed, there may be changes related to the FEMA considerations, flood heights, and sea level rise.

All projects affecting waterways within National Flood Insurance Program (NFIP) study areas will follow the standard procedures for compliance with floodway regulations (such as, but not limited to, 44 CFR 65.3, 44 CFR 65.12, and 23 CFR 650). FEMA floodway maps should be used to determine whether the proposed activity encroaches on the "Regulatory Floodway." Any encroachment on a regulatory floodway should be avoided, where practicable. If this encroachment cannot be practicably avoided and results in an increase in the 100-year flood elevation, a revision of the floodway data and/or maps should be made. On an individual project basis, approval or concurrence will be required from FEMA and the applicable county for providing the corrective measure and revising the floodway information.

Where appropriate and applicable, the procedures as established between FEMA and the FHWA should be used for coordinating or adopting FEMA regulatory requirements on highway encroachments. Two such procedures are the letter of map revision (LOMR) and conditional letter of map revision (CLOMR). The CLOMR and LOMR are required if the DelDOT project impacts a designated floodway and causes an increase in the 100-year base flood elevation (BFE). Additionally, for projects located in a FEMA floodplain but not within the FEMA floodway, increases to the BFE above 1 foot will require a CLOMR and LOMR. These procedures are discussed in a FHWA memorandum *Attachment 2 – Procedures for Coordinating Highway Encroachments of Floodplains with Federal Emergency Management Agency (FEMA)* (1992). Additional regulations on this topic are found in 23 CFR Part 650, Subpart A, Location and Hydraulic Design of Encroachments on Flood Plains.

As a result of continuous FEMA floodplain map updates, all communities in Delaware that participate in the NFIP will be required to adopt updated floodplain regulatory language to comply with NFIP requirements.

104.8.2 New Castle County Requirements

Chapter 40, Article 10 of the UDC establishes criteria for structures in or near floodplains and floodways. All projects in New Castle County are subject to this ordinance. Any structure to be located, relocated, constructed, reconstructed, extended, enlarged, or structurally altered

within a designated floodplain is subject to the UDC. The major items that must be included in the application procedures and plan that affect structure designers are as follows:

1. Site location and tax parcel number;
2. Brief description of the proposed work;
3. Plan of the site showing the exact size and location of the proposed construction as well as any existing structures;
4. Engineering analysis of the impact on the floodplain using HEC-RAS or another acceptable backwater analysis model;
5. An accurate delineation of the floodplain area, including the location of any adjacent floodplain development or structures and the location of any existing or proposed subdivision and land development;
6. Delineation of existing and proposed contours;
7. Information concerning the 1-percent chance of occurrence (100-year) flood elevations and other applicable information, such as the size of structures, location and elevation of streets, water supply and sanitary sewer facilities, soil types, and flood-proofing measures; and
8. An H&H report, certified by a registered Professional Engineer, that states that any proposed construction has been adequately designed to withstand the 100-year flood pressures, velocities, impact and uplift forces, and other hydrostatic, hydrodynamic, and buoyancy factors associated with the 100-year flood.

Refer to Appendix 1 of the *New Castle County Unified Development Code* for the specific requirements.

Projects in New Castle, Kent, and Sussex Counties are also subject to the regulations administered by FEMA. However, the UDC contains more stringent requirements concerning increases in water surface profiles that must be followed within the county. When water surface profiles are increased greater than permitted by the FEMA regulations, a CLOMR is required. Refer to FHWA memorandum *Attachment 2: Procedures for Coordinating Highway Encroachments on Floodplains with Federal Emergency Management Agency (FEMA)* and 23 CFR 650, Bridges, Structures, and Hydraulics.

104.8.3 Tax Ditches

Tax ditches are private organizations formed by adjacent property owners to construct and maintain a drainage system. These organizations are managed by officers elected by the owners and maintained by the County Conservation District (see Title 7, Chapter 41 of the Delaware Code). While there are existing tax ditch easements (solely for construction and maintenance of the ditches), DelDOT cannot use these easements without proper coordination. Alternately, DelDOT can secure separate easements for bridge and roadway construction and maintenance.

When designing structures over waterways that may be tax ditches, one must research the right-of-way and property owners in order to determine the existence and extents of the tax

ditch. The Team Support Section can provide assistance in this research. Tax ditches are subject to an H&H design just like any other waterway.

Tax ditch easements need to be submitted through the Team Support Section, which will prepare and submit tax ditch agreements for approval. (Note that for projects designed by a consultant, the consultant will write the agreement and submit it to the Team Support Section for review and distribution.) *Section 107 – Final Design Considerations – Substructure* covers the position of footing when adjacent to tax ditches.

104.8.4 Risk Assessment or Analysis

A risk assessment or analysis with consideration given to capital costs and risks, and to other economic, engineering, social, and environmental concerns should be included for the applicable design alternative(s) of any waterway structure. Refer to 23 CFR 650 Subpart A, Section 650.105 for an explanation and definition of "risk analysis." Generally, the risk analysis involves monetary figures in the calculation of the risk and other factors, whereas the risk assessment only involves narrative description of the relevant factors.

According to 23 CFR 650 Subpart A, Section 650.115, the design selected for an encroachment must be supported by analyses of design alternatives, with consideration given to capital costs and risks and to other economic, engineering, social, and environmental concerns.

1. Consideration of capital costs and risks should include, as appropriate, a risk analysis or assessment that includes:

    a. The overtopping flood or the base flood, whichever is greater, or

    b. The greatest flood that must flow through the highway drainage structure(s), where overtopping is not practicable. The greatest flood used in the analysis is subject to state-of-the-art capability to estimate the exceedance probability.

2. The design flood for encroachments by through lanes of Interstate highways should not be less than the flood with a 2 percent chance of being exceeded in any given year. No minimum design flood is specified for Interstate highway ramps and frontage roads or for other highways.

Risk analysis must be performed and included for the following types of waterway structures or impacts:

a. Encroachments at sensitive urban areas associated with new locations.

b. Any encroachment determined to be a "significant encroachment" as defined in 23 CFR 650 Subpart A, Section 650.105.

If the design flood frequency for the structure is less than that shown on Figure 104-5, a risk analysis may be required for submission to the Bridge Design Engineer.

Grossly undersized bridges can be impractical to change drastically, could cause downstream flooding, or can be difficult to get permitted. The flexibility to choose a lesser or appropriate design storm based on engineering judgment will be allowed for these types of structures.

Where a risk analysis is needed, a complete hydraulic report should be prepared that gives consideration to each alternative under study. The risk analysis, based on the least total expected cost (LTEC) design process, should be performed in accordance with the procedure as specified in FHWA's HEC-17, *Design of Encroachments on Floodplains Using Risk Analysis* (1981).

Risk assessment should be performed and included for all other waterway structures not specified in items (1), (2), and (3) above. The lower level of study or risk assessment should always be considered as the first course of action. The risk assessment should include a comparison of existing versus proposed WSEs and floodplain boundaries for the design and 100-year event, and for affected structures and their first floor.

104.8.5 Aids to Navigation

Many of the Department's bridge replacement projects require ATON, which warn waterway users of the changing conditions ahead as well as help guide these users through or around the project area. Projects on navigable waters within Coast Guard jurisdiction should coordinate with the Coast Guard. Place a standard note on plans that references DelDOT's detailed Coast Guard Specific Conditions specification number 763522.

104.8.6 DelDOT Project Development Manual

Section 6.4.3.5 "Floodplain Impacts" of the PDM explains the analysis required to minimize floodplain encroachment.

The PDM also has useful information on policy for compliance on laws, regulations, permits, and public involvement. Appendix B of the PDM is on "Laws, Regulations and Permits" and lists all potentially applicable regulations and environmental streamlining.

104.9 References

Note: Where documents are available on-line, the references are hyperlinked to their respective document.

AASHTO, 2014 (update in progress). *Model Drainage Manual*, prepared by the Task Force on Hydrology and Hydraulics. AASHTO Highway Subcommittee on Design.

AASHTO, 2014. *AASHTO LRFD Bridge Design Specifications*, 7th Edition.

DeBarry, Paul A. 2004. Watersheds: Processes, Assessment and Management. John Wiley & Sons, New York, NY.

DelDOT, n.d. *Standard Construction Details*.

DelDOT, 2004. *Road Design Manual*.

DelDOT, 2015. *Project Development Manual,* July.

DelDOT, 2015. *Standard Specifications for Road and Bridge Construction,* December.

FHWA, 1978. *Hydraulics of Bridge Waterways*, Hydraulic Design Series Number 1, Second Edition, U.S. Department of Transportation, Washington, D.C. (Bradley, J.N.).

FHWA, 1981. HEC-17*, Design of Encroachments of Flood Plains Using Risk Analysis*, April.

FHWA, 1989. HEC-11*, Design of Riprap Revetment,* IP-89-016.

FHWA, 1990. *Highways in the River Environment*, FHWA-HI-90-016, February.

FHWA, 1991, *Scourability of Rock Formations*: U.S. Department of Transportation, Federal Highway Administration Memorandum HNG-31, July 19.

FHWA, 1992. Attachment 2: *Procedures for Coordinating Highway Encroachments on Floodplains with the Federal Emergency Management Agency,* September 20.

FHWA, 1997. HEC 23, *Bridge Scour and Stream Instability Countermeasures: Experience, Selection and Design Guidance.* HI-97-030.

FHWA, 2006. HEC-14, *Hydraulic Design of Energy Dissipators for Culverts and Channels*, Third Edition, FHWA-NHI-06-086, July. https://www.fhwa.dot.gov/engineering/hydraulics/pubs/06086/hec14.pdf

FHWA, 2008. HEC-25*, Highways in the Coastal Environment,* Second Edition. FHWA-NHI-07-096.

FHWA, 2012a. HDS-5, Hydraulic Design of Highway Culverts, Third Edition, FHWA-HIF-12-026, April. https://www.fhwa.dot.gov/engineering/hydraulics/library_arc.cfm?pub_number=7&id=13

FHWA, 2012b. HDS-7, *Hydraulic Design of Safe Bridges*, FHWA-HIF-12-0182012, April.

FHWA, 2012c. HEC-18, *Evaluating Scour at Bridges*, Fifth Edition, FHWA-HIF-12-003, April.

FHWA, 2012d, HEC-20*, Stream Stability at Highway Structures*, Fourth Edition. FHWA-HIF-12-004, April.

FHWA, 2014. HEC-25, *Highways in the Coastal Environment: Assessing Extreme Events*, FHWA-NHI-14-006, October.

Flynn, K.M., Kirby, W.H., and Hummel, P.R., 2006. *User's manual for program PeakFQ, Annual Flood Frequency Analysis Using Bulletin 17B Guidelines: U.S. Geological Survey Techniques and Methods Book 4*. Chapter B4, 42 pgs.

HFAWG, 2013. *Memorandum – Recommended Revisions to Bulletin 17B*.

Laursen, E.M., 1980. *General Report No. 3. Predicting Scour at Bridge Piers and Abutments*. Arizona Department of Transportation.

NCHRP, 2003. NCHRP Report 24-15, *Complex Pier Scour and Contraction Scour in Cohesive Soils*, Transportation Research Board, National Research Council, Washington, DC.

NCHRP, 2004. NCHRP Report 516, *Pier and Contraction Scour in Cohesive Soils,* Transportation Research Board of the National Academies.

NCHRP, 2006. NCHRP Project 24-23, *Riprap Design Criteria, Specifications, and Quality Control*, Principal Investigator: Dr. Peter Lagasse, Transportation Research Board of the National Academies, September.

NCHRP, 2007. NCHRP Report 587, *Countermeasures to Protect Bridge Abutments from Scour*, Transportation Research Board of the National Academies.

NCHRP, 2011. Web-only Document 181, *Evaluation of Bridge Scour Research – Abutment and Contraction Scour – Processes and Prediction*, NCHRP 24-27(2), September.

NCHRP, 2012. NCHRP Report 717, *Scour at Bridge Foundations on Rock,* Transportation Research Board of the National Academies.

NCHRP, 2013, Web-Only Document 199, *Estimating Joint Probabilities of Design Coincident Flows at Stream Confluences*, Transportation Research Board of the National Academies ,March. http://onlinepubs.trb.org/onlinepubs/nchrp/nchrp_w199.pdf

National Weather Service, 2014. *NOAA ATLAS 14 POINT PRECIPITATION FREQUENCY ESTIMATES: DE* (On-line Application), last updated August 27, 2014. http://hdsc.nws.noaa.gov/hdsc/pfds/pfds_map_cont.html?bkmrk=de

South Carolina Department of Transportation, 2009. *Requirements for Hydraulic Design Studies*, May 26.

Tasker, 1975. "Combining estimates of low-flow characteristics of streams in Massachusetts and Rhode Island," *U.S. Geological Survey Journal of Research*, vol. 3, no. 1, January–February 1975, p. 107–112.

USACE, 1990. *Procedures for Compliance with Floodway Regulations with Federal Emergency Management Agency*, 2nd Ed, May.

USACE, 1997. *Users Guide to RMA2 WES*, Version 4.3. U.S. Army Corps of Engineers - Waterways Experiment Station, Barbara Donnell, ed., Vicksburg, MS.

USACE, 2001. *River Analysis System. HEC-RAS, User's Manual*, Version 3.0, Hydrologic Engineering Center, Davis, CA.

USACE, 2002. *Coastal Engineering Manual*. Manual No. EM 1110-2-1100, April.

USACE, Hydrologic Engineering Center, 1990. *HEC-2 Water Surface Profiles. User's Manual*, Hydrologic Engineering Center, U.S. Army Corps of Engineers, CPD-2A, Davis, CA, September.

USACE, Hydrologic Engineering Center, 2001. *UNET – One-dimensional Unsteady Flow Through a Full Network of Open Channels. User's Manual*, Hydrologic Engineering Center, U.S. Army Corps of Engineers, CPD-66 Version 3.2, Davis, CA.

USACE, Hydrologic Engineering Center, 2010. *HEC-RAS River Analysis System Hydraulic Reference Manual*. http://www.hec.usace.army.mil/software/hec-ras/documentation/HEC-RAS_4.1_Reference_Manual.pdf

USACE, ERDC, Coastal and Hydraulics Laboratory, 2013. *ERDC/CHL TR-11-1 Coastal Storm Surge Analysis: Modeling System Validation Report 4*: Intermediate Submission No. 2.0, July.

USBR, 1987. *Design of Small Dams*, Third Edition.

USDA, NRCS,1986. *Urban Hydrology for Small Watersheds*. Technical Release 55, 156 pp. First released by Soil Conservation Service, January 1975. http://www.nrcs.usda.gov/Internet/FSE_DOCUMENTS/stelprdb1044171.pdf

USDA, NRCS, 2004. *TR-20 System: User Documentation*, 145 pp.

USDA, NRCS, 2007. *National Engineering Handbook*, Part 630 Hydrology, 210-VI-NEH, May.

USDA, NRCS, 2009. *Small Watershed Hydrology: WinTR-55 User Guide*, 105 pp., January.

U.S. Department of the Interior, Interagency Advisory Committee on Water Data, 1982 [1971]. *Guidelines for Determining Flood Flow Frequency*, Bulletin #17B of the Hydrology Subcommittee: Reston, Virginia, U.S. Department of the Interior, Geological Survey, Office of Water Data Coordination, 183 p.

USGS, 2006. *Magnitude and Frequency of Floods on Nontidal Streams in Delaware*: Scientific Investigations Report 2006-5146, 59 p., Reston, VA.

Welle, Woodward, and Moody, 1980. *Dimensionless Unit Hydrograph for the Delmarva Peninsula*. ASAE Paper No. 802013, St. Joseph, MI.

Appendix 104-1: Hydraulic Field Assessment Checklist

Project Data

Contract Title:		SR Route:	
County:		P3E ID	
Stream Name:		Datum:	
Project Manager:		Field Personnel:	

Structure / Roadway Data

1. Bridge or Culvert		2. Type/Material		3. Number of Spans/Piers	
4. Pier Width		5. Pier Skew		6. Pier Nose Shape	
7. Abutment Type		8. Abutment Skew		9. Material	
11. Clear Span Width on Skew		10. Span (Normal) or Dia.		12. Height L/Min/Max/R	/ / /
13. Cover / Super-structure Depth		14. Bottom Material		15. Apron Y or N	
16. Wingwalls Y or N		17. Curb or Sidewalk		18. Guide Rail / Parapet Height	
19. Superelevation? US or DS		20. Embankment / Out-to-Out Width (Direction of Flow)		21. Pavement Width	

Site Data

A. Historical HWM		B. Observed HWM		C. Debris	
D. Erosion		E. Scour		F. D50	
G. Sediment Accumulation		H. Normal Flow Depth		I. Manning n L/C/R	/ /
J. Watershed Land Use		K. Upstream Dams?		L. History of Flooding	
M. Upstream Structures		N. First Floor Elevation		O. Known Flooding Event?	

Photo Index No. (Reference is looking downstream)

	Left Approach		Looking US from Structure		US Elevation
	Right Approach		Looking DS from Structure		DS Elevation
	Interior		Erosion/Scour		Bed Material

Bridge Dimension Guide

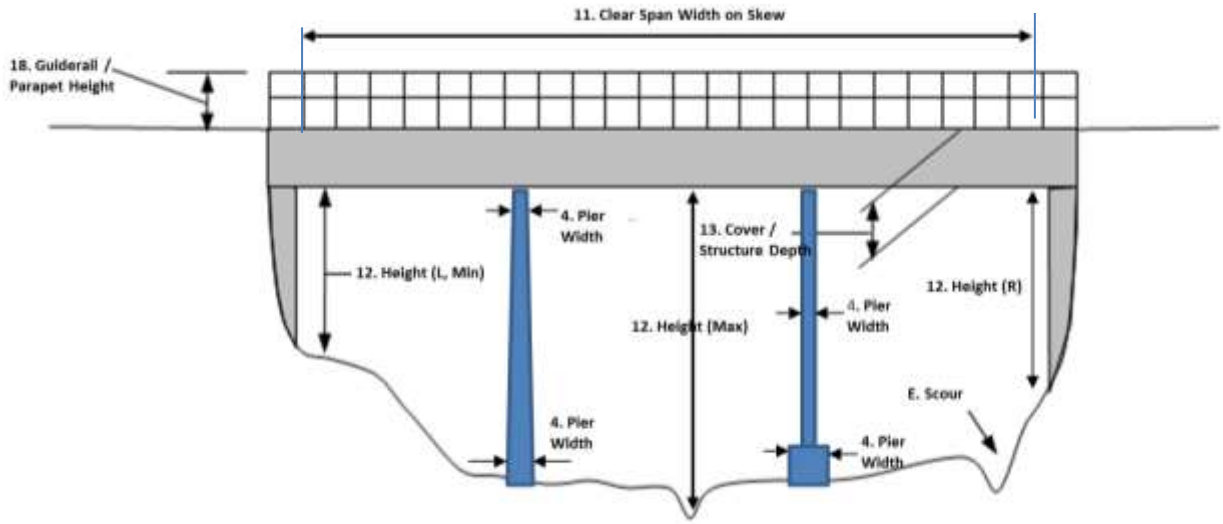

Culvert Dimension Guide

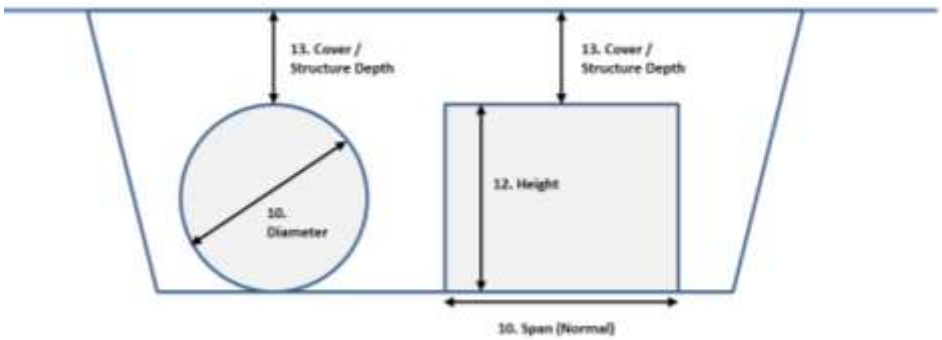

Horizontal Dimension Guide

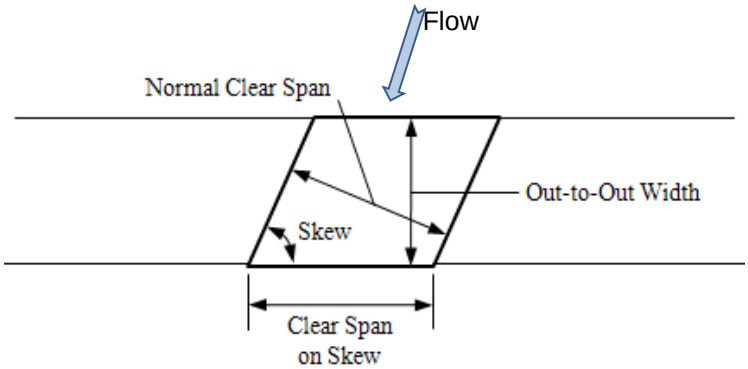

Manning n and Channel Material Guide

Channels	
Description	n
Clean, straight, no rifts or deep pools	0.030
Same as above, but more stones and weeds	0.035
Clean, winding, some pools and shoals	0.040
Same as above, but some weeds and stones	0.045
Same as above, but more stones	0.050
Sluggish reaches, weedy, deep pools	0.070
Floodways with heavy stands of timber/brush	0.100

Bed Material	Particle Diameter
Clay and silt	< 0.002 in
Sand	0.002 - 0.08 in
Gravel	0.08 - 2.5 in
Cobbles	2.5 - 10 in

Floodplains			
Description	n	Description	n
Grass field	0.030-0.035	Light brush/trees	0.050-0.060
Cultivated – no crop	0.030	Medium/dense brush	0.070-0.100
Cultivated – crops	0.035-0.040	Heavy trees	0.100-0.120

Local Testimony

Obtained During Site Investigation: [ ] No [ ] Yes

Name: _____ Phone #: _____

Address: _____

Notes : _____

_____

_____

Name: _____ Phone #: _____

Address: _____

Notes: _____

_____

_____

Notes

_____

_____

_____

_____

_____

_____

Sketches

Plan View

Elevation View

Appendix 104-2: Hydraulic Survey Form

HYDRAULIC SURVEY FORM

Project: _____

Stream Name: _____ Date: _____

County: _____ Job Number: _____

Obtaining complete and accurate stream and structure survey data is a critical step in the development of a hydraulic model. It is important for the engineer tasked with the hydraulic modeling to be involved in the selection of hydraulic cross section locations. This form is to be used by the engineer to communicate survey needs to the surveyor.

PART 1 - BASIC STREAM AND FLOODPLAIN SURVEY

The figure below depicts a typical hydraulic survey scenario. The survey must extend upstream and downstream of the structure, as required by the DelDOT Bridge Design Manual Section 104.1.5.
For most culvert and small bridge projects, a topographic survey sufficient to create a surface within the limits of the study is recommended.

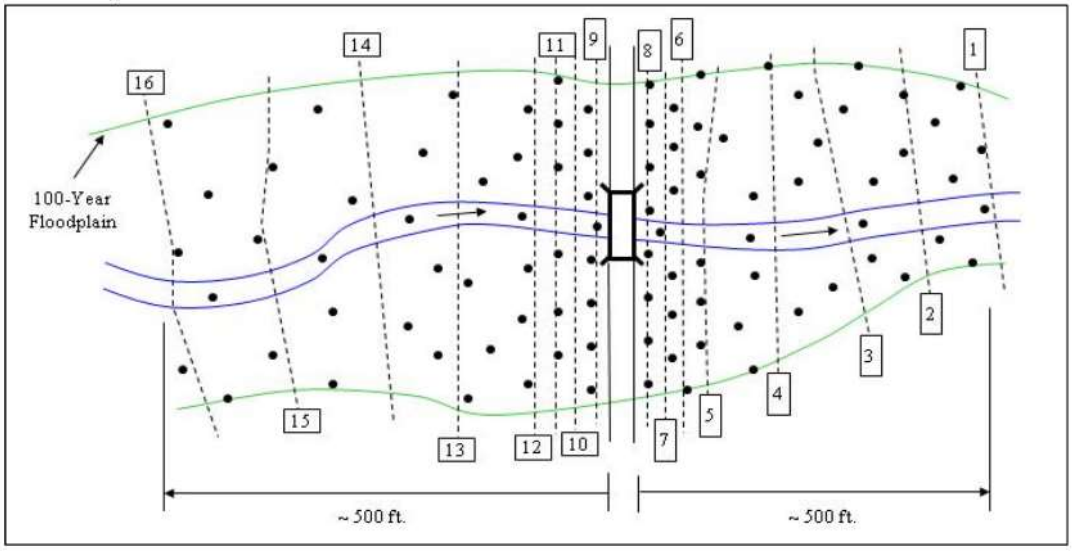

In general, elevations should be obtained at the top and bottom of stream banks, edge of water, the thalweg, and breaks in slope in the overbanks (floodplain) area. A typical stream cross section is shown below.

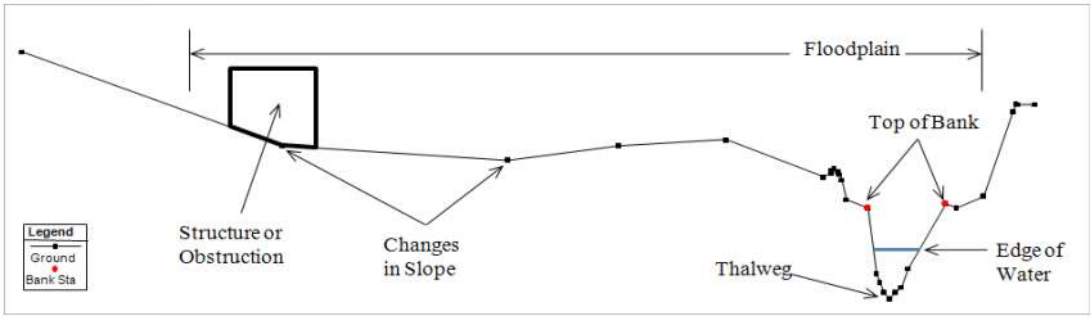

HYDRAULIC SURVEY FORM

Project: _____

Stream Name: _____ Date: _____

County: _____ Job Number: _____

In addition to the stream channel and floodplain, the survey should include all of the applicable items listed in Parts 1A and 1B.

1A - STRUCTURE AND ROADWAY FEATURES

- Approach roads (centerline, edge of pavement or shoulder)
- Bridge centerline and edge of deck (if superelevated) elevations
- Low chord elevations of superstructure (US and DS, L and R)
- Low beam elevations (if applicable) (US and DS, L and R)
- Top of railing and parapet
- Abutments (top and bottom corners, clear distance between abutments, US and DS, L and R)
- Piers (footings, shape, width)
- Scour holes (location, approximate width and depth)
- Gravel bars, beaver dams, etc. (location, approximate width and height)
- Other _____

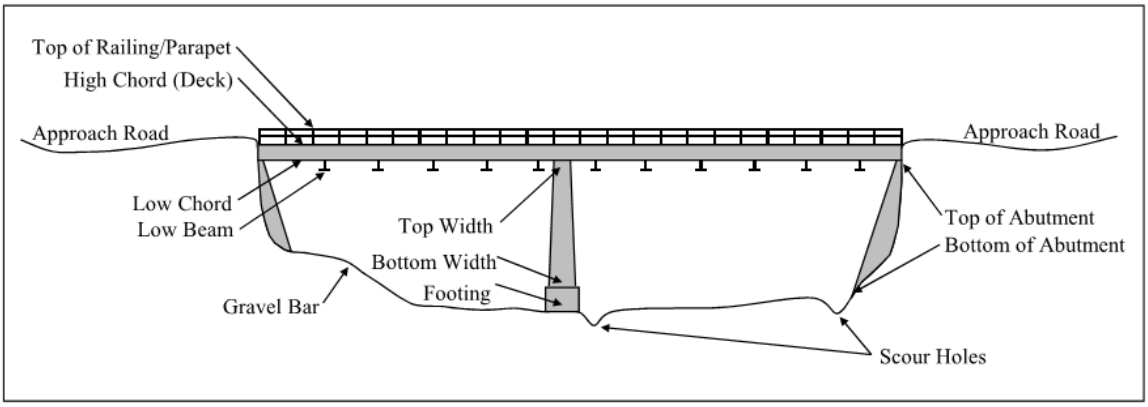

1B - OTHER FEATURES

- Other structures/obstructions (within survey limits)
- Changes in terrain/channel shape
- Gravel bars
- Meanders (sharp bends)
- Tributaries (section US/DS of intersection)
- Dams, spillways (top and bottom elevations)
- High water marks
- Stream gage locations
- Culverts (size, type, invert elevation)
- Bank protection
- Levees, walls
- Other _____

HYDRAULIC SURVEY FORM

Project: _____

Stream Name: _____ Date: _____

County: _____ Job Number: _____

PART 2 - SPECIAL REQUIREMENTS

Some project require channel/floodplain data for some distance upstream and downstream of the site. Examples of scenarios that may require more than outlined in Part 1 include:

- Most "rivers"
- Streams with very mild longitudinal grades
- Projects located in a detailed FEMA study area (Zone AE)
- Tidal areas

Check the items below that apply to the project.

☐ Additional cross sections (outside of the area in Part 1) are needed.
→ See the instructions in Part 3.

☐ LiDAR data is available in this area to complement floodplain data.
→ Note that the survey must be tied to the State Plane Coordinate System.
LiDAR data can downloaded from the Delaware Geological Survey website:
http://www.dgs.udel.edu/category/misc-keywords/lidar

2A - EXTENDED CROSS SECTION SURVEY

Sketch or insert a figure below depicting the locations of all hydraulic cross sections required that are located outside of the 500-foot offsets from the site. An annotated aerial photograph, USGS map, or FEMA FIRM (if applicable) is preferred.

HYDRAULIC SURVEY FORM

Project: _____

Stream Name: _____ Date: _____

County: _____ Job Number: _____

2B - GENERAL GUIDELINES FOR OBTAINING EXTENDED SURVEY

- The surveyed area should extend just beyond the 100-year floodplain, unless LiDAR is available.
- Cross sections should be perpendicular to the direction of flow. The direction of flow in the channel may be different than the direction of flow in the overbanks.
- Cross sections should not overlap.
- Cross sections should be perpendicular to the low flow channel and the direction of flow in the floodplain. Where the channel meanders through the floodplain, broken or dog-legged sections be necessary. See the following sketch.
- Survey all of the applicable features listed in Parts 1A and 1B.

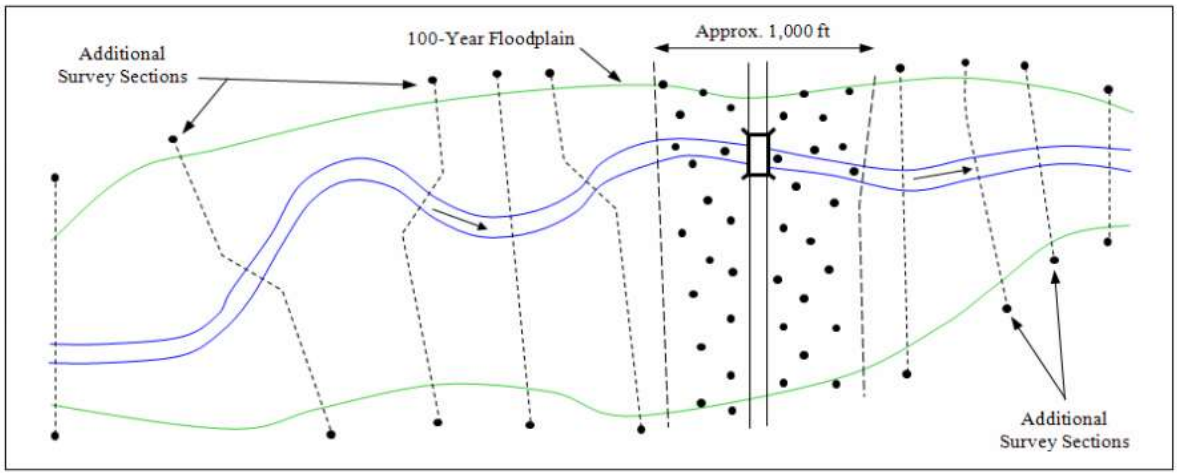

Appendix 104-3: H&H Report Hydraulic Data Summary Sheet

Location Data

Contract Title:		SR Route:	
County:		P3E ID:	
Stream Name:		Datum:	

Channel/Watershed Data

Ordinary High-Water Elevation		Historic High-Water Elevation	
Source of Information		Date	
Hydrologic Method used		Source of information	
FEMA Flood Zone		Wetlands Encroachment (acres)	
Lineal feet of stream impacted		Other	

Bridge/Culvert Data	Existing Structure	Proposed Structure
Bridge Type		
Number of Spans		
Skew (Relative to Flow Direction		
Normal Clear Span (Width)		
Out-to-Out Length (Dir. Of Flow)		
Low Chord Elevation		
Minimum High Chord Elev. Either Abutment		
Minimum Underclearance		
Bridge Open Area (from HEC-RAS)*		
Total Waterway Provided (ft^2) Scour Depth (ft)		

Tidal Area Data	Existing Structure	Proposed Structure
Mean High Water Elevation		
Mean Low Water Elevation		
High Wave Elevation		
Vertical Underclearance		
Freeboard		

Hydraulic Data	Existing Structure			Proposed Structure		
Hydraulic Method Used						
Return Period	Q (cfs)	WSE	Vel. (fps)	Q (cfs)	WSE	Vel. (fps)
Design Event _____ Yr						
Freeboard						
100-Year						
FEMA Regulatory 100-Year Floodplain Elev.						
Scour Design Event						
Overtopping Event (Return Period)						

APPENDIX 104-4: H&H REPORT SAMPLE FORMAT

COVER:

- Bridge No.
- P3E ID
- Contract No.
- Federal Aid No.
- Contract Title
- Report Prepared By:
- Signature and Seal of Professional Engineer Responsible for the H&H Report with Date of Report Approval

I. INTRODUCTION

1.1 Objective
1.2 General Description of Bridge Project and Surrounding Area
1.3 Roadway Classification and Design Frequency
1.4 General Description of Existing Bridge/Culvert Characteristics
1.5 General Description of Proposed Bridge/Culvert Characteristics (Include Bridge / Culvert Characteristics Table)
1.6 Flood (FEMA) Zone and History (high-water marks, dates, debris, overtopping, source of data)
1.7 Stream and Stream Bed Characteristics (Erosion, Scour, etc.)
1.8 Reference Datum
1.9 Upstream Conditions (building structures, dams, major tributaries, flood control structures)

II. HYDROLOGIC ANALYSIS

2.1 Objective

2.2 Drainage Area
2.3 Hydrologic Computation Methodologies
2.4 Hydrologic Summary Table Design Event Discharge (Include FEMA Flows)
2.5 Flood Frequency Curve

III. HYDRAULIC ANALYSIS

3.1 Objective
3.2 Hydraulic Analysis Methodology
3.3 Cross Section Data
3.4 Boundary Conditions
3.5 Manning's Roughness Coefficients
3.6 Energy Loss Coefficients
3.7 Structure Modeling
  3.7.1 Modeling of Existing Structure and Roadway
  3.7.2 Modeling of Proposed Structure and Roadway
3.8 Results including Summary Table of Existing v. Proposed Conditions Water Surface Elevations (WSE), Difference and Velocities (Design Event, 100-Year Event)
3.9 A summary of results from 2-D modeling (if warranted)
3.10 Temporary Conditions

IV. SCOUR ANALYSIS (Box culverts and rigid frames less than 25 feet span do not require a scour analysis, but scour countermeasures need to be provided at the inlet and outlet).

4.1 Scour event
4.2 Scour Analysis and Calculation Summary
4.3 Countermeasures and Calculation Summary

V. TIDAL INFLUENCES (if warranted)
VI. RISK ASSESSMENT (if warranted)
VII. H&H REPORT HYDRAULIC DATA SUMMARY SHEET

REFERENCES

APPENDICES

A. Supplemental maps (Location Map, Drainage Area Map (StreamStats), Aerial Photographs, Soils Maps, FEMA FIRM, etc.)
B. Site Photographs (Both approaches, looking downstream and upstream at structure, looking downstream and upstream from structures, opening(s)
C. Hydraulic Field Assessment Checklist (**Appendix 104-1**)
D. Design Drawings (HEC-RAS cross section locations, bridge design, plan and profile, E&S, existing and proposed 100-Year Floodplain, Scour protection, etc.)
E. Hydrologic Calculations
F. Hydraulic Calculations
    a. Digital HEC-RAS files
    b. Printed Existing and Proposed HEC-RAS Summary Table
    c. HEC-RAS cross sections plotted six (6) per page with the above event water surface elevations for existing, proposed and temporary conditions.
    d. HEC-RAS Plot of Existing versus Proposed Water Surface for:
        i. Design event
        ii. 100-year event
        iii. Scour Design Event
G. Temporary Conditions Drawings and Calculations
H. Scour and Channel Protection (Riprap Sizing, Countermeasures) Calculations

INTENTIONALLY LEFT BLANK

Section 105
Geotechnical Investigations

105.1 Introduction

The purpose of this section is to establish Department policies and procedures for geotechnical investigations, including subsurface investigation (e.g., test borings, piezometers, in-situ testing, sampling), soil/rock laboratory testing, and report preparation guidelines to be used on the foundation design of Delaware bridges, associated earth retaining structures, and other highway structures.

105.2 Terms

ASTM Standards – ASTM International standards. Most of the standards referred in this section are part of Volume 4.08 Soil and Rock (D420 – D5876).

AASHTO Standards – American Association of State Highway and Transportation Officials (AASHTO) standards.

Bedrock – Consolidated rock underneath surface soil deposits. Bedrock exposed at the surface is known as rock outcrop. For subsurface exploration purposes, bedrock is typically defined at auger refusal (or any other penetration technique refusal), not to be confused with very dense residual soil, isolated boulders, or cobbles.

Boulders and Cobbles – Rounded fragments of rock, cobbles are typically bigger than 3 inches, while boulders are bigger than 12 inches (approximately average sizes). These particles represent obstructions for drilling and should be carefully identified to avoid confusing them with bedrock during subsurface investigations.

Decomposed Rock – Weathered rock due to physical and chemical processes. Typically considered as an Intermediate Geomaterial (IGM).

FHWA GEC-5 – Abbreviation for FHWA-IF-02-034 Geotechnical Engineering Circular No. 5: *Evaluation of Soil and Rock Properties* (2002).

FHWA NHI-01-031 – Abbreviation for FHWA NHI-01-031 *Subsurface Investigations – Geotechnical Site Characterization Reference Manual* (2002), which supersedes the AASHTO *Manual on Subsurface Investigations* (1988).

Intermediate Geomaterial (IGM) – A material that is transitional between soil and bedrock in terms of strength and compressibility. Careful consideration should be given to IGM to avoid over predicting their strength and under predicting their compressibility.

Organic Matter – Decomposed material in soil derived from organic sources such as plant remains. Typically unsuitable for foundations based on low strength and high compressibility. Muck is a deposit of soil with a high content of organic matter, typically unsuitable for foundations.

Rock Mass Rating (RMR) – A geomechanical classification system for rocks. It expresses the quality of bedrock with one index based on the most relevant parameters, such as the intact rock strength, spacing and conditions of joints, and groundwater conditions.

Rock Quality Designation (RQD) – A measure of the degree of jointing or fracture in a rock mass. It is measured as the cumulative length of the drill core fragment having lengths of 4 inches or more, divided by the entire drill core length. It is expressed as a percentage.

Unsuitable Material – Refers to soil and rock deposits that are unsuitable for geotechnical applications because of low shear strength and high compressibility. This includes weak, highly plastic clays, organic soils, and soft weathered rock (if considered for Deep Foundations).

105.3 Subsurface Investigations

A subsurface investigation is typically defined as the investigation program performed to geotechnically characterize a site. It encompasses many aspects, such as a literature search and review of available published information regarding soil and geology maps, a site reconnaissance, and often in-situ testing to define a geotechnical model. A laboratory testing program is also associated with the subsurface investigation, typically performed on samples recovered during drilling operations.

The absence of a thorough geotechnical investigation or inadequate data may result in a foundation system with a large factor of safety, which may be unnecessarily expensive; an unsafe foundation; and/or construction problems, disputes, and claims.

A proper subsurface investigation should include structural borings. The common methods of advancing structural borings are auger drilling on soil and rotary coring (mostly for recovering rock cores). Auger drilling provides a disturbed soil sample that can be used for material characterization purposes. Undisturbed samples are typically obtained using a thin-walled sampler referred as a Shelby tube. Shelby tubes are commonly used for obtaining undisturbed samples of cohesive soils; they are not very effective for retrieving samples in granular soils. Rotary coring provides a rock core sample that can be used for laboratory testing.

The term “structural boring” is used throughout this section to refer to test borings performed for subsurface investigations at structure locations. These borings should not be confused with other types of borings, such as probe holes advanced only with the purpose of confirming top of rock elevation, dewatering holes advanced to lower the water table, piezometers to monitor groundwater table fluctuations, or any other kind of hole drilled with a different purpose. Note that there are also test borings performed for subsurface investigations on roadways, they are referred to as “roadway borings” and are not covered in this section.

As a boring is advanced in soil, Standard Penetration Tests (SPTs, ASTM D1586 – 1) are performed. See FHWA GEC-5 for detailed information regarding the SPT procedure.

Other in-situ test techniques can be used with or without borings, such as:

1. Cone Penetrometer Tests (CPT/CPTU/SCPTU) (ASTM D 5778)
2. Flat Dilatometer Test (DMT)
3. Pressuremeter Test (PMT) (ASTM D 4719)
4. Vane Shear Test (VST) (ASTM D 2573)

These in-situ tests do not provide samples, but directly measure soil resistance that can be correlated with shear strength, deformation modulus, and pore water dissipation. These methods can be used if the geotechnical designer believes they will provide useful information that cannot be provided by the regular SPT tests.

Common geophysical test methods that may be considered include:

5. Seismic Methods: seismic refraction, spectral analysis of surface waves (SASW), and multi-channel analysis of surface waves (MASW)
6. Electrical Methods: electric resistivity imaging, electromagnetics (EM), ground penetrating radar (GPR)

Although these methods are not typically used in most bridge projects, they could provide useful geological information almost impossible to obtain with regular borings. They are frequently used to detect anomalies in soil and bedrock. See FHWA GEC-5 for additional information regarding subsurface exploration methods and in-situ testing.

The geotechnical investigation should provide sufficient information to be used by the designer for the tasks described in the following subsections.

105.3.1 Estimating Soil and Rock Properties

Soil properties can be estimated from existing correlations with the SPT "N" values and other in-situ tests, such as pocket penetrometer tests and VSTs on cohesive soils.

The SPT is the most commonly used test in subsurface investigations. It is used to determine N-values. The N-values and other in-situ test results from the SPT can provide an indication of soil density, consistency, friction angle φ, and shear strength. N-values must be corrected for effective overburden pressure and hammer efficiency in order to use empirical correlations to develop preliminary values for friction angle and shear strength. See A10 – Foundations for more information regarding correcting N-values and correlating them with soils physical properties.

Rock properties can be estimated from retrieved rock cores using the RQD and the rock type. Other common rating systems such as the RMR should be used to estimate the rock mass shear strength.

Note that bedrock is typically expected only in northern New Castle County. The designer can refer to the Delaware Geological Survey website (http://www.dgs.udel.edu/) for additional useful information.

Rock coring is be performed using a double tube, wire-line preferred NX core barrel, 2 1/8 inches inside diameter. Different core barrel lengths are available, for example 5 and 10 feet. The Department preference is to use a maximum length of 5 feet to avoid potential damages to the long cores that may result in lower RQD values.

105.3.2 Estimating Ground Water Table Elevation

The subsurface investigation should determine the groundwater table elevation by measuring the water depth in the structural borings immediately after completion and a minimum 24 hours after completion. The 24-hour reading is typically needed to establish the groundwater table elevation. There are cases for which it may not be needed because the location of the water table is evident, for example in soils next to or below streams or in soil borings having only dry samples. The water depth readings can be correlated with the moisture description from the retrieved samples and laboratory moisture content tests.

Short-term monitoring typically consists of obtaining water depth readings immediately after completion (0 hour) and 24 hours after completion. The 0-hour reading is not always reliable because water may have been introduced into the hole as a result of coring operations or uncontained surface runoff. The 0-hour reading is commonly supplemented by the 24-hour reading. For most cases, the 24-hour reading is considered to be reliable because any disturbance to the local groundwater table should have stabilized after this period. If 24-hour readings are to be obtained, the Department preference is to install perforated screen pipe in the test boring hole after drilling is completed.

There are special cases that require additional short-term monitoring, normally at 48-hour and 72-hour increments. A few examples requiring this kind of short-term monitoring include drilling on clays with very low hydraulic conductivity where local groundwater disturbances may take longer to stabilize and penetrating confined aquifers with artesian pressure. For these cases, the Department preference is to use an open standpipe piezometer.

Because the groundwater elevation may vary throughout the year, the designer may request short- and long-term groundwater elevation monitoring. Short-term monitoring is typically performed at 24-hour, 48-hour, and 72-hour increments. Long-term monitoring requires installation of monitoring wells at the site.

Accurate groundwater level information is needed for estimation of soil densities, determination of effective soil pressures, and preparation of effective soil pressure diagrams. Water levels will indicate possible construction difficulties that may be encountered during excavation and the degree of dewatering effort required. This information is also needed to identify potential liquefiable sands, also known as “running sands,” as discussed in *Section 210 – Foundations*.

105.3.3 Estimation of Bearing Capacity

Bearing capacity for shallow and deep foundations systems on soil and/or rock should be evaluated based on the results of the subsurface investigation and laboratory test programs. A10 – Foundations presents the different methodologies used to calculate bearing capacity on soil and rock for both service and strength limit states. For stream environments, the geotechnical analysis of bridge foundations shall be performed on the basis that all streambed material in the scour prism above the total scour line has been removed.

105.3.4 Estimation of Settlement

Magnitude and rate of settlement should be evaluated based on the results of the subsurface investigation and laboratory testing program. In general, granular materials and stiff fine-grained soils exhibit elastic settlement. Elastic settlement occurs rapidly during construction or shortly after. See A10 – Foundations for more information regarding estimation of elastic settlement.

Fine-grained soils (clays and silts) with a soft to medium stiff consistency usually exhibit consolidation settlement. Parameters describing the consolidation behavior (magnitude and rate of settlement) can be estimated based on results, such as SPT N values and pocket penetrometer readings. However, the Department recommends obtaining these values from a 1-D consolidation test (ASTM D2435) using undisturbed soil samples. See A10 – Foundations for more information regarding estimation of consolidation settlement.

105.3.5 Estimated Depth of Unsuitable Materials

The subsurface investigation and laboratory test programs should provide sufficient information to determine the depth of unsuitable materials, such as weak fine-grained layers and soft/weathered bedrock. The foundation system should be designed either to work with these constraints, proving that enough bearing resistance is available at an acceptable level of settlement, or bypass these layers and bear on underlying competent strata (i.e., deep foundations). Quantities for over excavation (undercutting) and backfilling will be estimated based on the depths of unsuitable materials.

Deep foundations are often used to bypass weak/soft compressible strata and transmit the foundation loads to more competent underlying layers. In these cases, settlement of the weak/soft soils surrounding the piles should be evaluated for settlement and associated downdrag.

105.3.6 Global Stability

Global stability (also known as overall stability) of substructures, retaining walls, and embankments should be evaluated based on the results of the subsurface investigation and laboratory test programs. See A10 – Foundations and A11 – Abutments, Piers, and Walls for more information regarding estimation of global stability against circular and planar failures.

Per A11 – Abutments, Piers, and Walls, a minimum factor of safety of 1.3 shall be used when geotechnical parameters are well defined and the slope does not support or contain any structural element. A minimum factor of safety of 1.5 shall be used where geotechnical parameters are based on limited information, or the slope contains or supports a structural element. These factors of safety are equal to the inverse of the specified resistance factors by the load and resistance factor design (LRFD) design methodology (F.S. = $1/\varphi$).

105.3.7 Corrosive Environment

The subsurface investigation should provide sufficient information to ascertain any deleterious elements of the existing subsurface soils. The effects of corrosive soils and groundwater must be taken into account in the design of the foundation. The soils investigation shall provide the following minimum information to determine the potential deterioration to footings, driven piles, and drilled shafts:

1. Soil pH, sulfate, and chloride contents in soil and groundwater and moisture content;

2. General soil profile, including type, variation, depth and layering of fill and undisturbed natural soils, and groundwater level;

3. Previous land use;

4. Soil resistivity (laboratory test on soil samples); if evaluation of data with respect to criteria in *Section 107.3.5.4 – Corrosion and Deterioration* indicates a potential corrosion problem, a field resistivity survey may be warranted; and

5. If foundations are located in open water, a representative water sample should be analyzed for chlorides, sulfates, bacteria, pH, and the velocity should be measured.

105.3.8 Lateral Squeeze

Bridge abutments and similar structures supported on pile foundations installed through soft soils that are subjected to unbalanced embankment fill loading shall be evaluated for lateral squeeze. Lateral squeeze could also occur at the toe of slope embankments even without a structure. Refer to Section *210.7.2.6 – Lateral Squeeze* for more information.

105.4 Subsurface Investigation Request

Material and Research (M&R) is responsible for performing the subsurface investigation and laboratory testing program. The designer should request test borings and in-situ field testing through M&R to be performed at selected locations.

105.4.1 Request for Test Borings

Borings should be requested by completing the Soils/Rock Testing Program request form available on the DRC (Figure 105-2).

The request should be accompanied by the following:

1. Location map showing the site with respect to the general area.

2. Plan of the existing or proposed structure showing the approximate locations of the proposed substructure units and the borings requested. The plan should show as a minimum:

    a. Existing right-of-way limits and access.

    b. Location control points to assist the boring crew in accurately locating structural borings by station and offset, northing/easting, and/or latitude/longitude; and to record ground surface elevations.

    c. Any known underground and/or overhead utilities.

3. Depth of structural borings, including boring termination criteria.

4. In-situ testing at depths and borehole locations.

5. Design schedule.

6. Boring request form.

Depending on the size and complexity of the project, a meeting between the designer and M&R may be practical to discuss the scope and schedule of the proposed project. A two-stage boring schedule may be desirable for larger projects: an initial program followed later by an extensive program based on the results of the initial work.

The layout, number, and depth of structural borings depends on the local geology and proposed substructure foundations. Each project site should be treated individually and the investigation should not follow a specified format. The following are general guidelines that can be modified depending on specific circumstances. See FHWA GEC-5 for additional information regarding recommended boring layouts and boring termination criteria.

105.4.1.1 *Quantity and Location of Structural Borings*

The specific number of structural borings depends on the complexity of the structure, the anticipated subsurface conditions, and the level of risk that can be tolerated for the structure. For example, although two borings are typically considered to be enough for a culvert, or in some cases, for a small single-span bridge, two borings may not be sufficient for another single-span bridge where conditions significantly change at each substructure. The number of borings per substructure should be determined based on anticipated subsurface conditions rather than the geometry of the substructure.

The following are median values, not minimum values. Median values refer to representative/average cases. Median values are recommended for project sites with limited subsurface conditions information. For example, the only information available comes from a literature search, such as soil maps, oil/gas/water wells, and geologic mapping.

The designer can increase or decrease the number of structural borings depending on the specific project and the available subsurface information at the site. For example, the designer can decrease the number of borings if old borings were drilled at the site, or if the project is located in close proximity to another structure where uniform subsurface conditions have been identified. Similarly, the designer can increase the number of borings if the subsurface investigation for an adjacent structure revealed non uniform soil/rock conditions across the site. In preparing the request, the designer should consider the following guidelines for borings:

1. Borings should be obtained in the following median quantities:

    a. Two borings shall be obtained per abutment; this number should only be reduced if the designer is confident uniform conditions exist across the substructure. For example, the abutment is 40 feet long and local experience indicates the presence of uniform strata.

    b. One boring shall be obtained per wingwall; more borings may be needed if the adjacent borings for the abutment show non-uniform conditions across the site or the wingwall is longer than 40 feet.

c. Two borings shall typically be obtained per pier; as for the abutment this number can be reduced if the designer is confident uniform conditions exist across the substructure.

d. Two borings shall be obtained for pipes, culverts, and three-sided rigid frames. The borings shall be located at the inlet and outlet of these structures and shall be staggered.

e. Two borings shall be obtained for retaining walls and similar structures (such as ground-mounted noise walls) up to 100 feet in length. For longer wall structures, additional borings should be added at 100-foot intervals.

f. One boring shall be obtained for each sign structure foundation.

2. Borings should be within 20 feet of the proposed footprint of the substructure.

3. The borings for adjacent footings should not be located in a straight line but should be staggered at the opposite ends of adjacent footings, unless multiple borings are taken at each footing.

4. Where rock is encountered at shallow depths, additional borings or other investigation methods such as probes (borings without samples) and test pits may be needed to establish the top of rock profile. Understanding the hardness of the rock is also important for rock excavation for spread footings and rock sockets. Additional rock samples may be required in areas where the hardness of rock varies or has not been established.

5. Where muck, organic soils, weak, and/or unsuitable materials are encountered at shallow depths, additional borings, test pits, or other investigation methods (probes, cone penetrometers) may be needed to determine the required over excavation quantities or ground improvement.

6. The number of borings required and their spacing depend on the uniformity of soil strata and the type of structure. Erratic subsurface conditions require close coordination between M&R and the designer. Under non-uniform conditions, additional borings may be necessary.

7. Where spread footings are being considered, the designer should request that the driller take continuous samples. For deep foundations, continuous sampling may not be necessary while penetrating competent strata but should be provided while crossing weaker soils.

8. The Department recommends that the designer visit the site with the driller prior to and/or during drilling operations.

105.4.1.2 *Depth of Structural Borings*

The following are recommended criteria for boring depth termination. They should be used as general guidelines only. Termination of borings will depend on the encountered conditions:

1. For pile foundations on soil, the designer must have soils information extending at least 10 feet below the estimated pile tip elevation. Initial borings should extend to a depth

that allows the geotechnical designer to perform preliminary analyses to estimate an approximate tip elevation. Termination criteria for subsequent borings can be refined based on the results of these preliminary analyses. Examples of termination criteria for initial borings are:

a. Twenty to 30 feet below the top of the first hard layer to ensure that the layer is of sufficient thickness. The hard layer is defined as having an N-value of 20 or more for 20 feet.

b. For shallow deposits where the material provides limited resistance (N-value is less than 5 for fine-grained soil, 10 for coarse-grained/cohesionless soil) above the hard layer, the boring should extend a minimum of 30 feet or to refusal (N-value ≥ 50 blows/½ foot). If the weak/unsuitable material extends for a significant depth and a hard layer cannot be encountered, contact the Department Geotechnical Engineer.

2. For pile foundations on rock, terminate borings at least 10 feet into competent rock. If top of rock is weathered/soft, consider extending and terminating borings 10 feet into underlying competent strata.

3. For drilled shafts, terminate borings a minimum of 10 feet below the estimated pile tip elevation but no less than two times the drilled shaft width.

4. For spread footings on soil, terminate borings below the proposed bottom of footing elevation at a minimum depth of 1.5 times the estimated footing width. If unsuitable soils are present at this depth, extend borings to more competent strata. If top of rock is encountered within 1.5 times the footing width, consider terminating borings a minimum 10 feet into competent rock. Less than 10 feet of rock requires the approval of M&R.

5. For spread footings on rock, terminate borings a minimum of 10 feet into competent rock or 1.5 times the estimated footing width. Extend borings if voids or unsuitable soil seams are encountered in bedrock. Terminate borings in competent bedrock.

105.4.2 Boring Logs

Boring logs should contain the following information:

1. General information: State and Federal project numbers, the bridge number, the location of the boring, start/finish dates, the surface elevation, the equipment used, the sampling method, and water level readings.

2. Sample information: Sample number, sample depth, hammer blows per 6 inches, descriptions of the material in the samples, the amount of material recovered in each sample, the laboratory soils AASHTO classification, and RQD results.

a. A typical soil description consists of:

   i. Water content (dry, moist, wet), apparent consistency (fine-grained soils) or density (granular soils), color, soil type, and AASHTO group name (Group Index). Example:

      - Wet, stiff, gray silty clay with trace fine to coarse sand and fine gravel. A-7-6 (19).

b. A typical rock core description consists of:

   i. Rock type, color, hardness, degree of weathering, bedding/foliation thickness, and discontinuities spacing. Example:

      - Gneiss, grey, medium hard, moderately weathered, intensely foliated, closely fractured.

3. The locations of undisturbed samples are designated with the sample numbers. Any other information is listed under "Remarks."

Boring data are entered into a graphics design file using the Department's Boring Sheet program so designers can access it with computer aided design and drafting (CADD). The boring logs shall be included in the Contract Plans.

DelDOT uses the AASHTO classification, as displayed in Figure 105-1, as the primary classification system. See AASHTO M145 for the AASHTO soil classification system.

AASHTO Soil Classification System												
General Classification	Granular Materials (35% or less passing the 0.075 mm sieve)							Silt-Clay Materials (>35% passing the 0.075 mm sieve)				
Group Classification	A-1		A-3	A-2				A-4	A-5	A-6	A-7	
	A-1-a	A-1-b		A-2-4	A-2-5	A-2-6	A-2-7				A-7-5, A-7-6	
Sieve Analysis % passing												
2.00 mm (No. 10)	50 max	---	---	---	---	---	---	---	---	---	---	---
0.425 mm (No. 40)	30 max	50 max	51 min	---	---	---	---	---	---	---	---	---
0.075 mm (No. 200)	15 max	25 max	10 max	35 max	35 max	35 max	35 max	36 min	36 min	36 min	36 min	
Characteristics of fraction passing 0.425 mm (No. 40)												
Liquid Limit	---		---	40 max	41 min	40 max	41 min	40 max	41 min	40 max	41 min	
Plasticity Index	6 max		N.P.	10 max	10 max	11 min	11 min	10 max	10 max	11 min	11 min[1]	
Usual types of significant constituent materials	Stone fragments, gravel and sand		Fine sand	Silty or clayey gravel and sand				Silty soils		Clayey soils		
General rating as a subgrade	Excellent to good							Fair to poor				

Note (1): Plasticity index of A-7-5 subgroup is equal to or less than the LL – 30. Plasticity index of A-7-6 subgroup is greater than LL – 30.

FIGURE 105-1. AASHTO SOIL CLASSIFICATION SYSTEM

105.4.3 Coordination for Soils/Rock Testing

The designer should review the results of the test borings as soon as they are received to ensure that the borings are adequate and to give M&R as much time as possible to perform any additional tests.

The designer should work with M&R to develop the soils/rock laboratory testing program and to select the correct soil and rock samples to be tested. M&R has the capability of performing most of the soil/rock tests commonly required for bridge projects; however, M&R is not equipped to perform every test defined by AASHTO. Private testing laboratories can be used to perform other tests, if warranted.

To finalize the desired soil/rock testing program, the designer shall submit the Soils/Rock Testing Program request form (Figure 105-2) presented on the *DRC – Project Management Tab*.

Delaware Department of Transportation

Soil Boring Request Sheet

Contract Information	
Contract Number:	
Contract Name:	
Is this request funded with State or Federal Funds?	

M&R Contact	PD/Bridge Contact
Harry Fabry, PE	Enter Name
Phone: (302)760-2551	Phone: (302)XXX-XXX
Email: harry.fabry@state.de.us	Email: xxx.xxxx@state.de.us

Individual Boring Information - Refer to the Column Headers for Comments Pertaining to Completing This Form

Boring No.	Structure and / or Location Description	Northing	Easting	Total Boring Depth (FT)	AASHTO T206 Continuous Depth / SPT (FT)	Infiltration Test (Y/N)	Coordination (PM/MR)				Notes	Rock Coring (FT)	T208 & T289 pH / Corrosion (Y/N)	T99 or T180 Standard Proctor (Y/N)	T216-07 Consolidation Test (Y/N)	T236 Direct Shear (Y/N)	T297 CU Triaxial (Y/N)
							Proj. Owner	DMBC	Team	USACE							

Notes - Enter boring specific notes on individual lines and reference the note(s) in the table above.

Note No.	Note Description
1	
2	
3	
4	
5	
6	

Sheet Last Modified on: December 10th, 2014

FIGURE 105-2. SOILS/ROCK TESTING PROGRAM REQUEST FORM

NOTES:

1) Direct Shear tests – specify confining stresses and target unit weight for remolded samples

The sections below provide guidance on the typical soil and rock tests used by the Department. See FHWA GEC-5 for more information regarding laboratory tests used in the estimation of properties of soil and rock.

105.4.3.1 *Typical Soil Tests*

Soil properties can be estimated based on laboratory test results on disturbed and/or undisturbed samples. Disturbed samples obtained by SPT or directly from drilling cuttings, should be used only for material characterization tests such as, but not limited to:

1. Soil classifications (D4318, AASHTO T88, T89, T90, ASTM D422)
2. Moisture content determination (AASHTO T265, ASTM D2216)
3. Atterberg Limits (AASHTO T89/90, ASTM D4318)
4. Specific gravity (AASHTO T100, ASTM D854)
5. Standard and modified Proctor tests (AASHTO T99, T180, ASTM D698, D1557)
6. Direct shear test on remolded granular soils (AASHTO T 236, ASTM D3080)
7. Corrosion potential on soil: pH, chloride content, sulfate content, minimum resistivity on soil (AASHTO T288, T289, ASTM D4972, CalDOT 422, CalDOT 417)
8. Determination of organic content in soils by loss of ignition (AASHTO T 267)

Undisturbed soil samples obtained by using Shelby tubes or other acceptable methods should be used for laboratory testing to determine soil parameters used directly in geotechnical design. The tests mentioned above are still applicable to undisturbed samples. Some of the additional recommended tests on undisturbed soil samples are:

1. In-situ unit weight and void content of undisturbed soil samples (AASHTO T233)
2. One-dimensional consolidation (AASHTO T216, ASTM D2435)
3. Swell test of undisturbed samples (ASTM D4546)
4. Unconfined compression of cohesive soil (AASHTO T208, ASTM D2166)
5. Unconsolidated-undrained triaxial test (AASHTO T296, ASTM D2850)
6. Consolidated-undrained triaxial test (AASHTO T297, ASTM D4767)
7. Consolidated-drained triaxial test (ASTM D7181)
8. Direct shear test on undisturbed soil samples (AASHTO T 236, ASTM D3080)
9. Permeability of soil, constant or falling head (AASHTO T215, ASTM D2434, D5084)

105.4.3.2 *Typical Rock Tests*

The unconfined compression strength of the intact rock can be estimated from laboratory tests depending on the quality of the retrieved rock core samples:

1. For samples having a sufficient length to diameter ratio, use the unconfined compression test (ASTM D7012).

    a. The Department will allow the use of the former unconfined compression strength test method correction for samples less than 2L:1D (ASTM D2938).

    b. The Department also allows the use of the point load testing (ASTM D5731) for samples less than 2L:1D, with prior approval from M&R.

105.5 Geotechnical Report

The Geotechnical Report is prepared by M&R. The objective of a Geotechnical Report is to provide a preliminary summary of the subsurface investigation data and laboratory testing programs to be used to evaluate the need of additional investigation programs and develop feasible foundation alternates.

At a minimum, the Geotechnical Report should present the following information:

1. Plan view of the structure showing the location of the borings
2. Boring logs
3. Available laboratory test results
4. An evaluation of the encountered subsurface conditions including:

    a. Depth, thickness, and variability of soil strata

    b. Depth to groundwater

    c. Identification and classification of soils

    d. Shear strength, compressibility, stiffness, permeability, frost susceptibility, and expansion potential of encountered soils

    e. Depth to rock, identification and classification of rock, rock quality (i.e., soundness, hardness, jointing, resistance to weathering, and solutioning), compressive strength, and expansion potential

    f. Preliminary soil and rock parameters to be used in design (these parameters are limited to the laboratory test results). The Geotechnical Designer will develop additional parameters.

105.6 Foundation Report

A Foundation Report is required for all structures and is prepared by the designer. The objective of the Foundation Report is to provide the information collected during the subsurface investigation and laboratory testing programs and to present the recommended foundation type, foundation recommendations, general site preparation criteria, and other final design considerations, including final soil and rock design parameters for structural use.

Foundation Report requirements are divided into two categories, Standard and Concise. A Standard Foundation Report shall be submitted except as noted in *Section 105.6.1 – Concise Foundation Report*.

At a minimum, the following sections should be included in a Standard Foundation Report and should be presented in the following order:

1. Report Narrative:

    a. Section 1 – Introduction: project location, project purpose, project description

    b. Section 2 – Geologic and Geographic Setting: general topography, regional soils data, regional geologic data, including relevant findings from a literature search, soils maps, oil/gas/water wells, geologic mapping, and structural contours.

    c. Section 3 – Subsurface Investigations: discussion of subsurface investigations, subsurface descriptions and general site findings, including encountered depth, thickness and variability of soil strata, depth to groundwater, identification and classification of soils, depth to top of rock, and rock description.

    d. Section 4 – Laboratory Testing: discussion of laboratory tests performed and summary of test results and analysis, including:

        i. Classification and corrosion potential of soils

        ii. Shear strength, compressibility, stiffness, permeability, frost susceptibility, and expansion potential of encountered soils

        iii. Identification and classification of rock, rock quality (i.e., soundness, hardness, jointing, resistance to weathering, and solutioning), compressive strength, and expansion potential

    e. Section 5 – Data Interpretation and Analysis: presentation of design parameters, analysis and final design considerations, including:

        i. Soil and rock parameters to be used in design

        ii. Determination of bottom of footing/pile cap elevation

        iii. Evaluation of foundation alternates (may not require calculations)

        iv. Shallow vs. deep foundations: bearing capacity, lateral capacity, settlement, external stability, global stability considerations

        v. For shallow foundations: general consideration regarding consolidation settlement, time rate of consolidation, need for preloading, quarantine period

        vi. For deep foundations: general consideration regarding settlement of piles, settlement of pile group, settlement of surrounding soils, downdrag forces, potential driving obstructions, presence of boulders

        vii. Constructability issues, construction sequence, need for temporary shoring

f. Section 6 – Foundation Recommendations: final foundation recommendations, including:

i. Foundation type

ii. Bottom of footing/pile cap elevation

iii. Scour considerations and scour countermeasures

iv. Corrosion protection (i.e., special cement type concrete, epoxy coated rebar, consideration of sacrificial steel thickness for foundation elements design).

v. For shallow foundations:

1. Recommended factored bearing capacity
2. Expected magnitude and time rate of settlement
3. Differential settlement
4. Quarantine period if necessary
5. Any necessary overexcavation of unsuitable materials below the bottom of footing elevation
6. Specified required backfill material

vi. For deep foundations:

1. Type and size of piles/shafts (and any other deep foundation system)
2. Estimated pile/shaft lengths and minimum pile tip elevation
3. Pile driving methods and termination criteria, including drivability, dynamic monitoring with signal-matching (Pile Driving Analyzer [PDA] with Case Pile Wave Analysis Program [CAPWAP]), and restrike
4. Need for special pile tip reinforcement if expecting obstructions
5. Factored pile/shaft structural resistance
6. Factored axial geotechnical resistance: side friction, end bearing
7. Factored horizontal pile/shaft resistance (if necessary)
8. Estimated individual pile/shaft settlement, estimated pile/shaft group settlement
9. Estimated downdrag forces (if applicable)
10. Pile batter (if required)

vii. Site preparation criteria:

1. Recommendations for over excavation (undercutting) of soft/unsuitable materials, preloading, quarantine period, and monitoring/instrumentation program; whether excessive settlement is expected
2. Recommendations for temporary shoring, cofferdam protection
3. Provisions for dewatering of excavations, diverting of surface water
4. Recommendations regarding special treatments for global stability (overall stability)
5. If pertinent, results of seismic characterization

2. Appendix A – TS&L Plan: Provide a general plan view of the proposed structure as described in *Section 102.6.5.1 – Type, Size, and Location Submission Requirements*.

The plan should indicate the proposed substructure locations and location of borings. Include all pertinent information, such as location of temporary shoring where applicable and scour protection, if necessary. Provide an elevation view of the proposed structure showing bottom of footing/pile cap elevation, estimated pile tip elevations, stream bed elevation, required overexcavation, and backfill limits.

3. Appendix B – Typed Boring Logs
4. Appendix C – Plotted Boring Logs (Structure Plan Boring Logs)
5. Appendix D – Core Box Photographs (as applicable)
6. Appendix E – Geotechnical Calculations and Computer Output
7. Appendix F – Laboratory Testing
8. Appendix G – Subsurface Soil/Rock Profiles with Boring Logs (as applicable for long structures of 200 feet or greater length)
9. Appendix H – Special Provisions and Geotechnical Details
10. Appendix I – Maps: Typically includes location map, aerial map, topographic map (USGS 7.5min Quadrangle Map), soils map, and geological map.

The designer should review FHWA ED-88-053 *Checklist and Guidelines for Review of Geotechnical Reports and Preliminary Plans and Specifications* (2003) for other pertinent items.

105.6.1 Concise Foundation Report

A Concise Foundation Report may be submitted for projects that are determined to be of reduced risk because of their scale, site conditions, or overall complexity. Approval of the Bridge Design Engineer is required prior to proceeding with the preparation and submission of a Concise Foundation Report in lieu of a Foundation Report. Example projects types that may be considered for submission of a Concise Foundation Report include, but are not limited to, culverts, sign structures, closed-circuit television poles, short (less the 8 feet in height) retaining walls used for limited grade separation (i.e., not supporting live loads), and short single-span bridges.

A Concise Foundation Report shall include the information as outlined in Sections 105.6(1)a–d, (2), (4), (6), (7), and (10).

105.6.2 Foundation Report Submittals

Two copies of the Foundation Report should be submitted for review and approval by the Bridge Design Engineer. Additional copies may be requested for major, unusual, or complex bridges to be submitted to FHWA for its review and comment when applicable. Electronic submission of the report may be acceptable if previously approved by the Bridge Design Engineer.

105.6.3 Quality Assurance and Quality Control

The objective of a QA/QC process is to self-correct omissions and errors during the geotechnical design of substructures. Refer to *Section 101 – Introduction* for QA/QC requirements.

105.6.4 Geotechnical Design References

Geotechnical design should be in accordance with this Manual and the current AASHTO LRFD. For information not included in these documents, refer to the following references. In the case of contradicting information, priority will be given in the following order:

1. DelDOT *Bridge Design Manual*
2. *AASHTO LRFD Bridge Design Specifications*
3. FHWA Design Manuals
4. Transportation Research Board (TRB) Design Manuals
5. Naval Facilities Engineering Command (NAVFAC) Design Manuals
6. USACE Design Manuals
7. American Society of Civil Engineers (ASCE) Publications

105.7 References

AASHTO, 2014. *AASHTO LRFD Bridge Design Specifications*, 7th Edition.

FHWA, 2002a. FHWA-IF-02-034 Geotechnical Engineering Circular No. 5: *Evaluation of Soil and Rock Properties*, April.

FHWA, 2002b. FHWA NHI-01-031 *Subsurface Investigations – Geotechnical Site Characterization Reference Manual*, May.

FHWA, 2003. FHWA ED-88-053 *Checklist and Guidelines for Review of Geotechnical Reports and Preliminary Plans and Specifications*, February.

This page intentionally left blank.

Section 106
Final Design Consideration – Superstructure

106.1 Introduction

The purpose of this section is to establish Department policies and procedures for the final design and detailing of superstructure elements for new, typical Delaware bridges, as well as for their replacement and rehabilitation.

106.2 Terms

AASHTO LRFD – *AASHTO LRFD Bridge Design Specifications* (2014)

FCM – Fracture-critical member

HLMR Bearings – High load multi-rotational bearings

NEPCOAT – Northeast Protective Coating Committee

PTFE – Polytetrafluoroethylene—a synthetic fluoropolymer of tetrafluoroethylene that has numerous applications for bridge construction, but mainly in providing a low-friction sliding surface. The best-known brand name of PTFE-based formulas is Teflon®.

SIP Forms – Stay-in-place forms

SRM – System-redundant member

106.3 Design Loads

106.3.1 Dead Loads

The Department follows AASHTO LRFD for estimation of dead loads, including values for material unit weights.

Non-composite dead loads shall include the weight of the beams, diaphragms/cross-frames, deck slab, SIP forms, haunches, and additional deck-overhang concrete, as applicable. Depending on when utilities are installed, such as waterline and scupper drain pipes, these loads may also need to be included. A note should be added to the camber and deflection tables to alert the Contractor regarding which loads are included during each stage of construction.

Composite dead loads shall include the weight of the bridge barriers, and/or railings and sidewalks, as applicable. Miscellaneous dead loads on bridges (including, but not limited to, utilities railings, protective fencing, and bridge lighting) will preferably be composite dead

loads, but this is dependent on when (composite or non-composite condition) miscellaneous dead loads are installed. Consideration for loading from future utilities is not required, because new utilities are not permitted on bridges in Delaware.

Unless required or otherwise specified by design, the following non-composite dead loads shall be used:

1. Integral Wearing Surface: The top 0.5 inch of concrete bridge deck shall be considered an integral wearing surface, accounted for in dead load; but it is not to be considered in the structural design of the deck slab or as part of the composite section.

2. SIP forms: 15 pounds per square foot (includes concrete-in-form corrugations). Refer to *Section 106.4.2 – Concrete Decks* for criteria for the use of reduced loading to account for the weight of SIP forms.

Unless required or otherwise specified by design, the following composite dead loads shall be used:

3. Future Wearing Surface: 25 pounds per square foot.

Unless required or specified by design, the following dead-load unit weights shall be used:

4. Lightweight concrete: The permissible range for unit weight of lightweight concrete shall be 110 to 130 pounds per cubic foot. The design unit weight value shall be provided on the Plans, and be in accordance with the specified lightweight mix design, also to be included in contract documents.

5. Fill soil: 120 pounds per cubic foot.

Temporary construction loads on overhang formwork, such as Bidwell wheel loads and walkway live load, shall be verified as part of the design of exterior beams. Refer to *Section 106.4.2.7 – Deck Overhangs* for further description of this temporary construction loading condition.

106.3.1.1 *Considerations for Deck Haunch*

For the non-composite condition, the designer may conservatively estimate the haunch thickness for dead load estimation as part of the analysis and design of the beam, in lieu of providing accurate haunch dead loads throughout the length of the beam. For the composite condition, the typical approach shall be to account for the haunch in terms of its weight, but not in terms of increased capacity, due to the additional offset that the haunch provides in relation to the centroid of the deck and the centroid of the steel or concrete beam. When taking that approach, however, the designer shall consider the significance of such assumptions with regard to the overall composite member stiffness (deflections), and in the determination of the location of the centroid of the composite section.

106.3.1.2 *Distribution of Dead Loads*

Unless advanced analysis (2-D grillage or 3-D finite element analysis) techniques are employed, or justification for alternate distribution provided, the following distribution of dead loads shall be used for line girder analysis of typical multi-beam bridges:

1. Simple distribution for non-composite dead loads;

2. Composite dead loads shall be equally distributed among all beams in the bridge cross section, except for the following:

    a. Bridge barriers on deck overhangs should be distributed 75 percent to the exterior and 25 percent to the first interior beam in the cross section.

    b. Exterior sidewalks should be distributed by simple distribution to the girders below the sidewalk.

    c. Staged construction distribution of dead load may depend on the sequence of the bridge construction.

    d. For bridge widths greater than 40 feet, the designer shall consider not distributing to all beams, but applying rationale for limiting loads to adjacent two to three beams. This recognizes that in wide bridges, it is less likely for beams a significant distance from partial-width loads to feel the effect of the load.

The designer shall consider applicability of above methodologies for load distribution when 2-D grillage or 3-D finite element analysis methods are used.

106.3.2 Live Loads

Live loads and lane loads used for design shall comply with AASHTO LRFD. Application of live loads, including vehicles and pedestrians, will be in accordance with the AASHTO LRFD and as modified in *Section 203 – Loads and Load Factors*.

The designer shall recognize that new bridges and reconstructed bridge elements shall be verified for load-rating factors to be greater than or equal to 1.0 at Strength I (inventory level) for all Delaware legal loads. Refer to *Section 108 – Bridge Load Rating* and Figure 108-2 for a listing and description of the Delaware legal loads.

The designer shall also recognize that new bridges and reconstructed bridge elements shall be verified for load-rating factors to be greater than or equal to 1.0 at the Strength II (operating level) for Delaware permit vehicle(s). Refer to *Section 108 – Bridge Load Rating* and Figure 108-3 for a listing and description of the Delaware permit vehicle(s).

When travel lanes are striped less than 12 feet over the bridge, the design shall recognize the number of striped lanes on the bridge.

For bridges with mountable (8 inches or less) curbed sidewalks, the designer shall consider the cases of pedestrian loading on the sidewalk or vehicular loading (one truck only, no uniform load) on the sidewalk. This addresses instances when trucks overcome the curb. The designer shall also consider the case of the bridge being converted to full width for full vehicular traffic (sidewalk removed). Refer to *Section 203.6.1.6 – Pedestrian Loads*.

Consideration may be given to designing to the AASHTO Strength II load case for short-term staged conditions; and future re-decking conditions for all live-load vehicles.

106.4 Bridge Decks

106.4.1 Deck Type Considerations

The preferred bridge deck type is a reinforced-concrete deck using normal-weight concrete. Lightweight concrete and open, filled, or partially filled steel-grid decks shall only be considered for bridge rehabilitation projects as necessary, and/or as approved by the Bridge Design Engineer. Note that lightweight concrete bridge decks are intended to provide an equivalent compressive strength to normal-weight concrete bridge decks; however, the modulus of elasticity of lightweight concrete will be less than normal-weight concrete, which affects properties for stiffness provided by the composite section.

The Department recommends the use of decks that are designed to be composite with the superstructure. Composite action decks are typically designed so that both the deck and beam or girder respond to live loads and superimposed dead loads as a unit. For a breakdown of non-composite and superimposed composite dead loads, see *Section 106.3.1 – Dead Loads*. For steel bridges, the interconnection of the beams to the concrete deck is accomplished using welded shear studs attached to the top flange. For concrete beams, the interconnection is accomplished using steel reinforcing bars embedded in the beam, extending into the deck. Typically, the stirrups are extended above the top of the beam to serve as the interconnection between the beam and the deck.

106.4.2 Concrete Decks

Refer to *Section 205.4.2.1 – Compressive Strength* for deck concrete material properties.

The use of galvanized S.I.P. deck forms for the construction of cast-in-place concrete bridge decks is preferred. No beneficial structural contributions from the S.I.P. form and the concrete in the valleys of the form shall be taken into consideration in the deck design.

Refer to *Section 325.01 – Concrete Deck Details* for the typical concrete deck section formed with SIP forms.

The welding of deck forms to structural steel components is not permitted in areas where the top flange can be subject to tension under Strength I Limit State. For SIP form connection details in compression zones and tension zones, refer to *Section 335.01 – Steel Beam Bridge Details.*

For dead load calculations and the establishment of deck form connection details, the type of deck form and additional dead load from the forms must be provided on the design plans. Refer to *Section 106.3.1– Dead Loads* for typical weight of SIP forms to be considered in the design. The use of removable forms, placement of preformed cellular polystyrene in the valleys of the deck forms, or the use of soffitted forms must be specified on the Plans, but only when required by design.

106.4.2.1 *Concrete Deck Design Considerations*

For new bridges, and when within the AASHTO criteria for its use, the concrete bridge deck shall be designed by the Empirical Method, in accordance with Section A9.7.2 – Empirical Design.

The design of deck edges or edge beams and the design of transverse reinforcement in the deck overhangs shall be designed in accordance with the AASHTO Traditional Design method, per A9.7.3 – Traditional Design. Refer to *Section 109.3.4.4 – Widening and Partial-Width Re-decking* for bridge widening and partial re-decking projects. For full re-decking projects, refer to *Section 109.3.5.3 – Concrete Deck Replacement*.

The deck overhangs shall not only resist vertical effects of dead and live loads, but also the traffic barrier collisions loads, in accordance with AASHTO LRFD.

For staged sequence of deck construction, the designer shall consider the potential for interim deck conditions; particularly temporary barrier loadings, and the temporary overhang conditions between stages of construction.

106.4.2.2 *Deck Thickness*

When using the Empirical Method of design, use an 8½-inch deck thickness for beam spacings, ranging from 4 feet to 12 feet. Note that the 8½-inch-thick deck shall be considered effectively an 8-inch-deck, accounting for the ½-inch integral sacrificial wearing surface.

When using the Traditional Method of design, use the minimum 8½-inch deck thickness (8-inch effective thickness). The designer shall increase the deck thickness by ½-inch increments only as required to maintain a minimum 6-inch rebar spacing and maximum bar size. Note the maximum-size deck reinforcing in *Section 106.4.2.3 – Deck-Reinforcing Steel*.

Note that the deck thicknesses listed above refer to the thickness between beams. The thickness of the deck in the overhang shall be a minimum of 1 inch thicker than the thickness between the beams, and is a function of the exterior beam haunch thickness and standard detailing of the deck overhang (refer to *Section 325.01 – Concrete Deck Details*). The deck thickness in the overhang may vary along the length of the bridge, and may exceed 10 inches.

If a concrete deck is proposed for superstructures with adjacent beam configurations, such as NEXT beam and adjacent concrete box beam structures, the deck thickness shall be a minimum of 5 inches.

The deck thickness includes a ½-inch integral wearing surface. The integral wearing surface is not considered a part of the design thickness. Therefore, as an example, the minimum design thickness is 8 inches for an 8½-inch-thick deck.

Where corrugated metal SIP forms are used, the thickness should be measured to the top of the corrugation, as shown in *Section 325.01 – Concrete Deck Details*.

106.4.2.3 *Deck-Reinforcing Steel*

Reinforcing steel meeting the requirements for AASHTO M31, Grade 60, should be specified.

Epoxy coating conforming to AASHTO Section M284 should be specified. All deck-reinforcing steel should be protected with fusion-bonded epoxy, except for new deck construction adjacent to existing concrete with black reinforcing steel. For new deck construction adjacent to existing concrete, the new deck-reinforcing steel should match that in the existing deck section.

In consideration of crack control, as a general rule, the use of smaller reinforcing bar sizes at closer spacing is preferable to larger bars at increased spacing. The minimum size of reinforcing in bridge decks shall be a #4 bar; and the maximum size of reinforcing in bridge decks shall be a #6 bar, as required by design. Although anticipated to be the exception, larger bars may be required by design for transverse bars in deck overhangs and longitudinal bars over interior supports.

Lap splices and mechanical splices, when needed, shall be staggered every other bar, when practical; however, it is understood that staged construction may limit the designer's ability to stagger splices.

106.4.2.3.1 Deck Reinforcing for Spread Beam Bridges

106.4.2.3.1.1 Transverse Reinforcement

For multi-beam bridges, the transverse deck reinforcing bars shall be placed as the top and bottom bar in the top and bottom mat of reinforcement, respectively.

Effect of Bridge Skew

a. For bridges with support skews equal to or less than 25 degrees, the transverse reinforcing shall be placed parallel to the abutments. The deck span length shall be determined along the direction of the transverse reinforcement. Bar spacing shall be specified parallel to the girders on the design plans. When two abutments are skewed at different angles, set the transverse reinforcement in the direction of the milder skew; and at the more sharply skewed end, detail the bars to be fabricated shorter to fit into the acute corner of the deck. When any abutment skew is more severe than 25 degrees, the transverse reinforcement shall be placed perpendicular to the girders, with the bars detailed to be fabricated shorter to fit into the acute corner of the deck.

b. Bridges with skews greater than 25 degrees, or where the transverse reinforcing will interfere with the shear studs (or stirrup reinforcing for prestressed beams), the transverse reinforcement shall be placed perpendicular to the centerline of the bridge. Refer to Section A9.7.2.5 – Reinforcement Requirements for additional reinforcement required along the skewed edge of the deck at deck joints. Also refer to *Section 325.01 – Concrete Deck Details* for guidance on detailing of transverse-deck reinforcement at skewed edges of bridge decks.

For curved girder bridges, transverse-deck reinforcement should be placed radially. The bar spacing shall be measured along the girder along the outside of the curve.

106.4.2.3.1.2 Longitudinal Reinforcement

a. Typically, the primary deck reinforcement is transverse, or perpendicular to traffic. In these cases, the longitudinal reinforcement is considered secondary reinforcement, or distribution reinforcement. Refer to Section A9.7.3.2 – Distribution Reinforcement for amount of distribution reinforcement required. Secondary (distribution) bars should be small bars at close spacing. Therefore, the required secondary bar size should be a #4, unless the bar spacing becomes less than 6 inches.

b. In the negative moment regions of superstructures continuous over piers, additional reinforcement shall be added in the longitudinal direction to control deck cracking due to tension in the deck, in accordance with Section A5.7.3.4 – Control of Cracking by Distribution of Reinforcement and Section A6.10.1.7 – Minimum Negative Flexure Concrete Deck Reinforcement. The additional longitudinal reinforcement in the negative moment region should extend the entire length of the dead load negative moment region, plus the development length at each end, into the positive moment region. When feasible, the bar reinforcement shall be continuous throughout the entire length of the negative moment region. When the longitudinal bars need to be lap-spliced in the dead load moment region, the lap splices shall be staggered.

106.4.2.3.2 Deck Reinforcing for Adjacent Beam Bridges

When deck slabs are specified for adjacent beam bridges, the deck slabs shall be a minimum of 5 inches thick. A single mat of #4 bars spaced at 6 inches in each direction shall be used in the deck, maintaining a clear cover of 2½ inches to the top of the deck. The use of welded-wire fabric is not permitted.

Refer to *Section 106.9.8.1 – Grade and Cross-Slope Effects* for setting of adjacent box beams with the cross-slope of the bridge to minimize haunch thickness. When cross-slope transitions increase the deck-slab thickness above 6 inches, the use of spread box beams in lieu of adjacent box beams should be considered. If an adjacent box beam superstructure is required with cross-slope transitions that increase the deck-slab thickness above 6 inches; a second, bottom mat of #4 bars shall be provided, spaced at 6 inches in each direction. The bottom mat should maintain a minimum cover of 1½ inches above the top of the beams. The designer will need to adjust the spacing of the bottom mat to avoid the composite bars extending from the beams.

In the dead-load negative-moment regions of superstructures continuous over piers, additional reinforcement shall be added in the longitudinal direction to prohibit deck cracking, in accordance with Section A5.7.3.4 – Control of Cracking by Distribution of Reinforcement and Section A6.10.1.7 – Minimum Negative Flexure Concrete Deck Reinforcement. The bar reinforcement shall be continuous throughout the entire length of the dead-load negative-moment region, plus the development length on each end beyond the dead-load contraflexure point.

For adjacent box-beam decks, the transverse reinforcing steel should be placed parallel to the abutments regardless of magnitude of skew. If the abutments are not parallel, the transverse reinforcement shall be placed parallel to the abutment with the milder skew. At the more sharply skewed end, detail the bars to be fabricated shorter to fit into the acute corner of the deck.

106.4.2.4 *Deck Haunch*

For steel superstructures, the deck haunch is defined as the vertical distance from the bottom of deck to the top of the top flange. For prestressed concrete superstructures, the deck haunch is defined as the vertical distance from the bottom of deck to the top of prestressed beam.

For steel beams and girders, the haunch is typically detailed on the Plans as a minimum depth; however, in the field, the haunch depth will vary based on steel camber tolerances. For prestressed beams, the haunch will typically vary to accommodate the difference in the profile to the cambered shape of the prestressed beam. The haunch depth will also vary based on the difference between actual and predicted camber in prestressed concrete beams.

The haunch affords the flexibility in construction to adapt the field conditions to achieve the final top-of-deck elevation and required thickness of the deck. The designer shall consider the haunch as a method to accommodate fabrication and construction tolerances, and unknown or unanticipated conditions in the field for various bridge types and span lengths. Advantages and disadvantages of a deeper haunch shall be considered in the design and detailing.

Bridge decks for spread multi-beam superstructures shall be detailed to have a minimum haunch thickness of 2 inches over the steel- or concrete-beam top flange, as measured from any point along the width of the top flange to the bottom of the deck slab. The haunch shall be no less than 1 inch over splice plates on steel girders, as applicable. The haunch dimensions should be determined at the locations corresponding to the deck elevations over the girders as specified in *Section 106.4.3 – Finished Deck Elevations*.

The deck haunch should accommodate construction tolerances and variations due to beam camber, cross-slope, and/or longitudinal profile. With the exception of haunches over prestressed concrete beams with top flanges greater than or equal to 3 feet, haunch reinforcement shall be required for haunch thicknesses exceeding 5 inches. For all other beam types, haunch reinforcement shall be required for haunch thicknesses exceeding 3 inches. Refer to *Section 325.01 – Concrete Deck Details*.

106.4.2.5 *Concrete Cover*

See *Section 205 – Concrete Structures* for concrete cover requirements.

106.4.2.6 *Deck Placement Sequence*

For multi-span continuous structures that require multiple concrete placements, the assessment of the five items listed below requires that sequential structural analysis (deck placement sequence analysis, a typical feature in most steel design programs) be performed. Deck placement sequence analysis is required for bridges that require that concrete be placed in multiple segments (i.e., cannot be placed in one continuous operation) and where placement can cause negative moment to occur in previously placed concrete deck sections.

An assessment shall be performed to determine an acceptable concrete slab placement sequence. The assessment shall address (but is not limited to) the following items:

1. The change in stiffness of the composite girder section as different segments of the slab are placed, and as it affects both the temporary stresses and the potential for "locked-in" erection stresses.

2. Bracing (or lack thereof) of the compression flange of girders, and its effect on the stability and strength of steel girders during slab placement.

3. Temporary loading conditions induced by overhang deck forms (*Section 106.4.2.7.1 – Overhang Forming and Temporary Support Conditions*) for steel bridges,

4. Uplift at bearings.

5. Tension/cracking in previously placed segments of the deck.

In comparison with the assumption that all non-composite dead load is placed simultaneously over the entire structure, deck placement sequence analysis more accurately represents how dead load stresses are induced into the structure, bracing conditions, deflections sequentially throughout deck placement, and dead load camber. Proper deck placement sequence shall also assure against excessive deck cracking due to tension in previously placed sections of the deck. The analysis of slab placement shall be done in an incremental fashion. The analysis should consider the sensitivity and/or potential for reduced concrete modulus of elasticity, given that previously placed concrete may not have reached its projected concrete modulus of elasticity at 28 days, a function of f'_c, at the time of subsequent deck placements. The strength gain of concrete and its corresponding modulus of elasticity (E) correspond to the concrete's maturity. Before placement, a minimum concrete strength of $0.5f'_c$, shall be achieved in the previously placed section of deck subject to tension, as specified in the Standard Specifications.

For continuous-span steel structures, a deck placement sequence plan shall be provided in the design plans, matching that of the deck placement sequence calculations performed as part of girder design calculations. Each step in the deck placement sequence shall represent a section of deck that can practically be placed in 1 day. Although the general principle of concrete deck placement sequencing is to place all the positive moment regions first, and then place the negative moment regions, it is generally more cost-effective for contractors to work from one end of the structure to the other. Therefore, the designer shall determine the feasibility of the following sequence:

a. Place the end span positive moment (Span 1) region.

b. Place the adjacent positive moment region in the first interior span (Span 2).

c. Place the adjacent negative moment region over the first interior support

d. Alternate positive moment region in the next span and then back to the adjacent negative moment region until deck placement is complete.

The concrete placement shall typically begin at the lower end of the segment to be placed, and proceed uphill. Therefore, on the deck pouring sequence shown on the Plans, the designer should show both the numeric sequence of placement and the direction of placement. The design should be cognizant that changing the direction of placement in the sequence will require the Contractor to pick and rotate the deck finishing machine, which generally should be kept to a minimum.

Although it is generally preferable for concrete placement to proceed uphill, for symmetric continuous span configurations, it is recommended that the placement sequence allow the Contractor to start from either end of the structure. If the structure has an asymmetrical continuous span configuration, the designer shall consider performing the analysis from either end to provide the Contractor with either alternative; however, differential effects on dead load camber between the two alternatives would need to be assessed, or provided in the Plans.

In addition to the requirements of the Standard Specifications for continuous steel superstructures, the following note is recommended to be included with the Deck Placement Sequence Plan in the design plans:

i. Changes to the placement sequence or alternative deck placement sequences proposed by the Contractor during construction must be submitted for approval. The submittal shall be signed and sealed by a Professional Engineer licensed in the State of Delaware. The submittal shall include calculations for the revised deck placement sequence analysis determining the effects on dead load stresses, bracing, and camber.

Similar deck placement procedures are required for prestressed concrete beams; however, the designer shall consider the sequence of placing the concrete intermediate, end diaphragm, and pier diaphragms along with the deck placement.

See AC6.10.3.4 for further commentary regarding deck placement sequence and associated design recommendations and per Section A6.10.1.7– Minimum Negative Flexure Concrete Deck Reinforcement requirements. Provide minimum negative flexure slab reinforcement, as per Section A6.10.1.7 – Minimum Negative Flexure Concrete Deck Reinforcement and *Section 106.4.2.3 – Deck-Reinforcing Steel* as applicable.

106.4.2.7 *Deck Overhangs*

Refer to *Section 106.4.2.1 – Concrete Deck Design Considerations* for deck overhang design methodology.

Concrete deck overhangs shall meet the requirements of A3.6.1.3.4 – Deck Overhang Load. In no case shall the deck overhang be greater than the lesser of half the beam spacing or the beam depth.

Refer to *Section 325.01 – Concrete Deck Details* for deck overhang details. The overhang should be formed to a minimum thickness of 1 inch greater than the interior deck span thickness. The minimum overhang thickness shall be measured at the exterior edge of the deck, or as required for proper detailing of overhang and barrier anchorage reinforcing bars into the deck. The overhang should be detailed to meet flush with the underside of the top flange of steel girders and to the top side of the top flange of concrete beams.

The exterior termination of the top main flexure reinforcement shall be checked in the overhangs to ensure proper design and development of the reinforcement for both gravity and vehicular collision loads. Vehicular collision forces may require bundling bars in the overhang. A 180 degree hook is required for the exterior termination of the top main flexure reinforcement to ensure its development. The designer shall check the hooked bar in the overhang to ensure that the hook can physically fit while maintaining the necessary clear cover requirements. Vertically oriented hooks are preferred, but the reinforcement can be rotated out of vertical plane to assist with clearance; the allowance to rotate the hooked bar should be noted on the Plans, as applicable.

106.4.2.7.1 Overhang Forming and Temporary Support Conditions

The designer must verify the constructability of the overhang. The designer shall consider the effect of the temporary horizontal construction loading from overhang brackets on exterior beams during deck placement. Refer to Figure 106-1 for a detail illustrating this temporary

construction loading condition on exterior beams due to overhang bracket support systems for deck placement. The effect of this horizontal construction loading is torsion on the exterior beam. For further reference on this condition, the designers may refer to *Torsional Analysis for Exterior Girders – TAEG 2.1* (Roddis et al., 2005).

This temporary loading condition due to placement of the concrete overhang shall be checked as part of the design of exterior steel beams. Note also that these temporary overhang loading conditions may also apply to interior beams as part of staged construction conditions.

For the erection condition with the overhang form support system, the bridge designers shall verify the strength and stability of the exterior girder by applying the load of the overhang concrete and construction equipment loading to the girder as follows:

The standard form support system, shown in Figure 106-1, may be used without additional exterior girder design checks only where:

1. Girder web depth is less than 8 feet
2. Deck-slab overhang is less than 4 feet 9 inches
3. Overhang slab thickness is equal to or less than 10 inches
4. Transverse stiffener spacing does not exceed the depth of the girder

Note that the details shown in Figure 106-1 are for guidance for exterior beam design, and are not meant as a construction detail to be shown on the design plans.

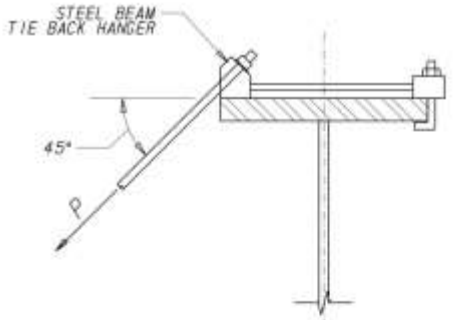

DETAIL AT TENSION AREA

NOT TO SCALE

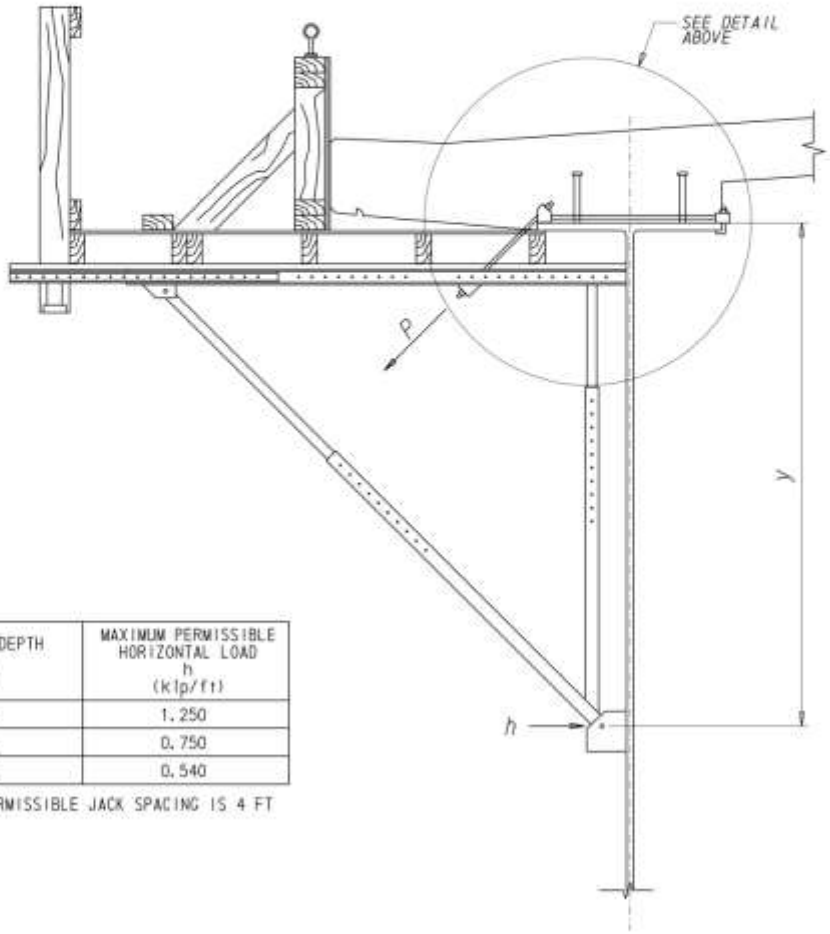

NOMINAL DEPTH y (in)	MAXIMUM PERMISSIBLE HORIZONTAL LOAD h (kip/ft)
36	1.250
56	0.750
76	0.540

MAXIMUM PERMISSIBLE JACK SPACING IS 4 FT

TYPICAL OVERHANG FORMING DETAIL

NOT TO SCALE

FIGURE 106-1. TEMPORARY DECK OVERHANG FORM SUPPORT LOADING

When the four conditions listed above are not met, exterior girders are to be designed for a temporary horizontal construction load of _**_ kip per foot, as taken/interpolated from the table provided in Figure 106-1. The construction load approximates the horizontal reaction of a deck overhang support bracket as depicted in Figure 106-1. The load accounts for the weight of the concrete, forms, incidental loads, and the deck-finishing machine. Where transverse stiffener spacing is needed to satisfy constructability in amounts less than required for the design shear, the stiffeners needed for the design shear may be used if the overhang forms are supported from the bottom flange of the fascia girder, or if the girder web is adequately braced to prevent buckling due to loads from web-bearing form support brackets.

106.4.2.7.2 Scupper Detailing

Refer to *Section 103.3.2.1 – Shoulder Width Requirements for Deck Drainage* for the design requirements for sizing and spacing of scuppers on bridge decks. It is preferable to provide scuppers within deck overhangs that can accommodate simplified scupper detailing. If not geometrically feasible to fit within the overhang, the designer shall consider modifications to the scupper details. If necessary, the scupper can be recessed up to 6 inches under the bridge barrier; and the barrier, including barrier reinforcing, shall be modified to accommodate.

Scuppers should be designed with properly sized inlet openings to minimize clogging from siltation or debris. The installation of a drainage inlet upslope of the bridge can minimize the need for bridge deck scuppers and the clogging problem. The downslope drainage inlet beyond the bridge should be designed assuming 50 percent of bridge deck scuppers are clogged. Scuppers should be located at the desirable 2 percent minimum slope, both transversely and longitudinally, to achieve self-cleansing velocity. When a scupper is recessed into the barrier, the minimum height of opening should be 4 inches. This consists of a 3-inch curb opening and a 1-inch deck depression with proper transition. The bottom of the opening should be adequately sloped.

106.4.2.8 *Concrete Deck Finishing*

Concrete bridge decks in Delaware are to be textured in accordance with requirements of the Standard Specifications, which outline texturing by mechanical grooving. For the purpose of the structural design of the bridge deck, any reduction to the deck thickness as a result of texturing are to be assumed in the design as part of the ½-inch integral wearing surface.

106.4.2.8.1 Protective Sealers for Concrete Decks

For new concrete bridge decks, the deck is typically not to be treated with a protective sealer.

106.4.2.9 *Future Wearing Surface/Overlays*

Except when specified as part of an adjacent beam superstructure without a concrete deck, overlays are not typically specified as part of new deck construction. Overlays may also be considered for bridge preservation. Refer to *Section 109.3.4.3 – Low-Permeability Overlays* for design procedures and considerations for bridge deck overlays. New bridges are to be designed for the potential of overlays being added in the future (future wearing surface). Concrete re-decking projects should account for future wearing surface, unless otherwise directed or approved by the Bridge Design Engineer. Bridge preservation projects, where deck

overlays are proposed, shall only account for the as-proposed weight of the overlay. In other words, future wearing surface beyond that which is proposed as part of the bridge preservation work need not be accounted for in the bridge loadings. Refer to *Section 106.3.1 – Dead Loads* for future wearing surface dead loads.

When a bituminous overlay is recommended as part of the original bridge construction of prestressed-concrete adjacent-beam superstructures, the minimum wearing surface thickness shall be 2 inches, but may be greater if used to accommodate roadway cross-slope, or adjust for uneven surface of the adjacent beams. When a bituminous wearing surface is applied to adjacent box beams, a membrane shall be placed between the wearing surface and the top of the beams detailed to prevent penetration of water into the concrete structure. The dead load of the wearing surface shall be assumed to be 25 pounds per square foot (the same as Future Wearing Surface), unless the actual calculated weight of the proposed wearing surface is greater. In that case, the designer shall design for the actual weight of the wearing surface.

106.4.2.10 *Concrete Deck Construction Joints*

Construction joints, either transverse or longitudinal, are permitted in the bridge deck only at locations shown on the Plans. A construction joint must be used at the break between concrete placements, such as those required by the concrete placement sequence, per *Section 106.4.2.6 – Deck Placement Sequence*. Normally, construction joints are to be detailed as keyed, cold joints. See *Section 325.01 – Concrete Deck Details* for typical construction joint details in bridge decks. The number of construction joints in the bridge deck joint should be minimized, to the extent practical.

For transverse joints adjacent to negative moments where additional reinforcement has been provided, it is suggested that the transverse joint be located 6 inches beyond the termination of the additional reinforcement bars. This will simplify the construction of the bulkhead, with less bars interfacing with it.

106.4.3 Finished Deck Elevations

Finished deck elevations are to be shown in the Plans, at the centerline of bearing over each abutment, at the centerline of the pier(s), and at 1/10th points along the span—but at no greater than 10-foot intervals. It is preferred that the deck elevation correspond to beam camber points. The finished deck elevations should be provided:

1. Longitudinally over each beam;
2. Longitudinally along the span at the break points in the cross slope of the deck, and
3. Longitudinally along curb lines at bridge barriers, sidewalks, etc.

106.5 Bridge Barriers and Railings

Unless otherwise approved by the Bridge Design Engineer, provide bridge barriers and railings from *Section 325.02 –Bridge Railing Details*, as listed below meeting the TL rating required by design. For determination of the TL rating required see A13.7.2 – Test Level Selection Criteria. Refer to *Section 325.02 – Bridge Railing Details* for barrier reinforcement and contraction joint details.

1. F-Shape Barrier – The F-shape barrier is the preferred bridge barrier for highway vehicular use. The height of the standard F-shape barriers is 3 feet 6 inches, providing a TL-5 rating, and 3 feet for a TL-4 rating. The 4 feet 2 inches tall F-shaped glare-screen barrier, typically only used as a median barrier as required, provides a TL-5 rating. Similarly, the 4 feet 6 inches tall F-shaped barrier adjacent to median gaps from 6 inches to 12 feet wide provides a TL-5 rating. Refer to *Section 103.3.3 – Protection for Median Gap of Parallel Structures* for further description and background information regarding median gap protection.

2. Pedestrian Barrier with Metal Railing – A vertical-faced barrier with a metal railing should be used as the outside railing for bridges with sidewalks. The height to the top of the metal railing is 3 feet 6 inches minimum, with 4 feet preferred. The concrete section is a 2 feet 3 inches tall vertical-faced barrier section.

3. Bicycle Railing – Where bicycle paths are carried across structures, bicycle railings may be justified as the exterior railing type. When using a bicycle railing, the bicycle path shall be separated from the traffic lanes with a crash-worthy traffic barrier. The designer shall contact the Bicycle/Pedestrian Coordinator to determine where bicycle paths are to be located. Bicycle railings shall meet the design load and geometric requirements as outlined in Section A13.9 – Bicycle Railings.

4. Open Ornamental Barriers – Open ornamental barriers may be justified for aesthetic reasons for restoration of historic bridges or for bridges in historic areas. Types of crash-tested, open-face ornamental barriers include the Texas C411 and T411, and the Oklahoma Modified TR-1 Bridge Rail. The open-face ornamental concrete barrier types listed above meet TL-2 requirements. Also, in cases where an ornamental railing may be desired, the designer may elect to provide a traffic barrier meeting the TL requirements to separate the traffic lanes from the sidewalk, and then design the ornamental fencing along the outside edge of the deck for the required pedestrian load requirements.

106.5.1 Bridge Barrier Design Considerations

New concrete bridge barriers shall be detailed with contraction/deflection joints and therefore the barrier will not act compositely with the girder. If the existing barriers are not detailed with contraction joints, concrete barriers shall not be relied on for AASHTO LRFD Strength Limit States. Stiffness contribution of concrete barriers for calculations of deflections may only be used with approval of the Bridge Design Engineer.

As specified in the Standard Specifications, it is not permissible to slip-form concrete bridge barriers unless allowed by a special provision included in the contract documents.

Material properties to be used in the design and detailing of bridge barriers are listed below:

1. Bridge Barrier Concrete – Refer to *Section 205.4.2.1 – Compressive Strength* for concrete material properties.

2. Barrier Protective Coating – Silicone sealer is to be applied to all exposed barrier faces, in accordance with Standard Specifications.

3. Concrete Barrier Reinforcing Steel – Reinforcing steel meeting the requirements for AASHTO M31, Grade 60 should be specified. The minimum size of reinforcing in concrete bridge barriers should be a #4 bar. Reinforcing steel sizes, spacing, and details shall be in accordance with FHWA-approved crash-tested barriers. All barrier reinforcing steel shall be protected with fusion-bonded epoxy. Epoxy-coating conforming to AASHTO Section M284 shall be specified.

4. Bridge Barrier Concrete Cover – Provide 2 inches minimum concrete cover for all concrete bridge barrier types.

106.5.2 Protective Screening, Shielding, and Fencing

Protective screening is to be provided on selected bridges to prevent throwing debris onto vehicles passing beneath the bridge. Screening is to be provided at locations over interstates, freeways, arterials, collectors, or as directed by the Bridge Design Engineer. Refer to AASHTO's *A Guide for Protective Screening of Overpass Structures* (1990). Refer to the DelDOT *Standard Construction Details* for screening details.

Shields are typically required on railroad overpasses to prevent the impact of glare from train headlights. Similarly, protective barriers are required on railroad overpasses, including electrified railroads. The designer shall coordinate the shielding and/or protective fencing requirements with the associated railroad(s).

Limits of protective screening, shielding and fencing shall be identified, presented, and approved as part of the TS&L or preliminary design submission. Refer to *Section 103.10 – Requirements for the Design of Highway Bridges over Railroads* for limits of protective screening on bridges over railroads.

The designer shall consider the type of shielding to be used not only for weight purposes, but also for lateral-force effects on the bridge. The protective screening/shielding/fencing acts as a partial or full wind block.

106.5.3 Bridge Lighting

It is preferred to locate light poles on bridges at or near support points to minimize vibrations and fatigue in the light pole induced from bridge movement.

106.6 Deck Joints

For new structures, minimize the number of deck joints on the bridge.

Deck joints shall be considered to be oriented parallel to the centerline of bearings at substructure units unless noted otherwise. Refer to *Section 340.01 – Strip Seal Expansion Joint Details, Section 340.02 – Finger Joint Expansion Joint Details,* and *Section 340.03 – Compression Seal Joint* for typical deck joint details.

Deck joints shall be constructed with the use of block-outs in the bridge deck, installed after the placement of the bridge deck, unless specified otherwise by the design. Installing the deck joints after placement of the entire length of bridge deck eliminates the need for the joint to accommodate movements due to non-composite dead load translations and/or rotations, and to allow for the setting of the joint opening for the temperature at the time of placement.

Deck joints at fixed bearings are designed to accommodate movements at the deck level due to beam-end rotation caused by composite dead loads and live loads, including dynamic load allowance for appropriate AASHTO Limit States. For deck joints at fixed bearings, include an additional ¼ inch of movement allowance for construction tolerance. Typical joint types at fixed bearings shall be strip seals. Compression seals are not recommended, particularly at joint locations where failure of the seal will cause leakage to substructure beams seats/bearing areas.

Deck joints at expansion bearings shall be designed to accommodate the combination of expansion and contraction movements of the span caused by temperature change and beam rotations from composite dead loads (typically insignificant) and live loads, including dynamic load allowance. For deck joints at expansion bearings, include an additional 1/2 inch of movement allowance for construction tolerance, in addition to the calculated movements from the above effects. For new construction, the two types of joints used at expansion bearings are strip seals and finger joints, with a preference towards strip seals when movement allowance is less than or equal to 5 inches.

Simplified methods of determining thermal movements are typically appropriate for straight bridges with one fixed bearing line. Refer to Figure 106-2, for an example calculation using the simplified method of determining deck joint movements.

For bridges with multiple fixed piers, the stiffness of the fixed piers should be considered in the determination of thermal movements.

Expansion of skewed and/or horizontally curved bridges may not follow the longitudinal direction of the bridge. The seal size and direction of movement must be designed to accommodate joint movement as affected by bridge skew, horizontal curvature, and/or bridge width. It is therefore recommended that thermal analysis also be performed as part of the superstructure analysis for horizontally curved bridges where advanced (2-D or 3-D) superstructure analysis is performed. This advanced thermal analysis, in lieu of simplified methods of determining the magnitude and direction of thermal movement, is recommended for proper design and detailing of bearings and deck joints for horizontally curved superstructures. Refer to *Section 106.8.8 – Steel-Plate Girder and Rolled Beam Bridges* for guidance of when advanced superstructure, and therefore advanced thermal analysis, is required.

Consideration for the accommodation of transverse thermal movement shall also be provided for bridges over 50 feet wide.

106.6.1 Jointless Bridges

Consistent with the goal of minimizing the number of deck joints on the bridge, the use of continuous superstructures and integral, semi-integral abutments, or bridge deck extensions shall be used when appropriate. Refer to *Section 103.6.2 – Abutments and Wingwalls* for guidelines for the use of integral and semi-integral abutments, respectively.

106.6.2 Strip Seal Joints

Strip seals are to be considered for new construction, bridge re-decking projects and bridge rehabilitation projects. In selecting strip seals, the designer must consider the relationship of

total movement, minimum and maximum joint widths, and installation temperature. Refer to *Section 340.01 – Strip Seal Expansion Joint Details* for strip seal joint details.

The application of strip seals is limited to a maximum allowable movement of 5 inches, also referred to as 5-inch maximum movement classification. For movements of 3 inches or less, specify the minimum strip seal movement capability (or movement classification) of 3 inches.

DESIGN VARIABLES

L = length of structure contributing to movement

ΔL = change in structure length due to temperature

T = Temperature

ΔT = change in temperature (Delaware is in the moderate climate zone)

J = joint width

α = coefficient of thermal expansion or contraction of a given material (use 6.5×10^{-6} in/in per °F for steel and 6.0×10^{-6} in/in per °F for concrete)

Example Problem

Given: Steel beam bridge, 200 ft, temperature range is 0°F to 120°F (for this example), so ΔT is 120°F.

Find: Joint movement, select seal and complete joint sizing at 68°F.

$\Delta L = \Delta T \alpha L$

$\Delta L = 120°F(6.5 \times 10^{-6}/°F)(200\ ft)(12\ in/ft)$

$\Delta L = 1.872$ in

Select a seal with movement rating equal to or greater than 1.872 in + 1/2 in for construction tolerance at expansion joints Assume 3 in movement rating for this example.

Find the midpoint of expansion and contraction.

½ ΔT = 0.5(120°F) = 60°F

120°F - 60°F = 60°F

Determine the joint opening midpoint from manufacturer's literature.

½ seal movement rating plus half of the 0.50 in. constr. tolerance = (0.5*3 in)+0.25 in = 1.75 in, for this example.

Compute the joint opening at the installation temperature; assume 68°F.

(1.872 in)*(68°F - 60°F)/(120°F) = 0.125 in

1.75 in - 0.125 in = 1.625 in

Joint opening at 68°F must be 1.625 in

Minimum joint opening:

(1.872 in)(120°F - 60°F)/(120°F) = 0.936 in

1.75 in - 0.936 in = 0.814 in

Maximum joint opening:

(1.872 in)(60°F - 0°F)/(120°F) = 0.936 in

1.75 in + 0.936 in = 2.686 in

FIGURE 106-2. EXAMPLE OF SIMPLIFIED METHOD FOR CALCULATION FOR DECK JOINT MOVEMENTS

106.6.3 Steel Finger Joints

Finger joints are used where movements in excess of 5 inches must be accommodated. A finger joint is an expansion joint with the opening spanned by meshing steel plates formed as fingers or teeth. Finger joints are open, so a trough must be installed to control runoff through the joint. The trough is to be detailed to a minimum gradient of 1/12 (8 percent minimum slope) to ensure drainage and flushing. Refer to *Section 340.02 – Finger Joint Expansion Joint Details* for steel finger joint details.

106.6.4 Longitudinal Joints

Longitudinal joints in bridge decks may be required for wide bridges, widened bridges, or staged construction bridges. A wide bridge is defined as being over 90 feet wide, or having a span-to-width ratio less than 1 (i.e., the width is greater than the span). Longitudinal joints are always placed between beams or girders. Place them in the median or next to the median, if possible. Avoid placing longitudinal joints in the traveled way because of the hazard to motorcycles. Compression seals are not to be used for longitudinal joints. The designer must determine the amount of joint movement (transverse, vertical, and longitudinal, as applicable) when designing longitudinal strip seals. Unless determined to be insufficient to meet joint design requirements, strip seal joints with 3-inch-movement classification shall be specified for longitudinal joints, when required.

106.7 Approach Slab Design

Approach slab concrete strength shall match that of the bridge deck. Refer to *Section 205.4.2.1 – Compressive Strength* for concrete material properties.

Except in the area of super elevation transition, the cross slope of the bridge and the roadway should be the same. The designer should lay out grades at corners and center point of the approach slab, including the beginning and the end, along every lane and shoulder line, or as an alternate along beam lines.

Use of elastomeric joint seal for the joint between the concrete pavement and the approach slab is recommended.

Requirements for reinforcing steel, epoxy-coating, and concrete cover shall match that of the bridge deck.

106.7.1 Approach Slab Geometry and Design Requirements

Refer to *Section 325.03 – Approach Slab Details* for standard approach slab detailing. The minimum length of approach slab shall be 18 feet, and the maximum length shall be 30 feet, providing enough length to span beyond the backfill limits behind the abutment. The thickness of the approach slab shall be 16 inches, unless additional thickness is determined to be needed for the design. The clear concrete cover to the top and bottom mat of reinforcement shall be 2½ inches and 3 inches, respectively.

The approach slab shall be designed as a one-way slab continuously supported at the abutment end and at the roadway end. The concrete slab design shall be in accordance with the methodology outlined in A5.14.4.1 – Cast-in-Place Solid Slab Superstructures; however, longitudinal edge beams need not be provided. The design of the approach slab shall be

checked for both bending and shear. The design shall assume no support from the abutment backfill or the base material below the approach slab.

The support at the abutment end shall be provided by one of two details, as shown in *Section 325.03 – Approach Slab Details*:

1. Approach slab support notch at the rear face of the abutment backwall, or
2. A support notch at the top of a concrete end-diaphragm.

When feasible, option 2 above is preferable to option 1.

The support at the roadway end of the approach slab shall be provided by a sleeper slab or deepened end, as detailed in *Section 325.03 – Approach Slab Details*. The sleeper slab or deepened end-section shall be designed as a beam on elastic foundation (BOEF). A subgrade modulus "k_v" between 300 and 500 pound per cubic inch may be used for well-graded, compacted gravel backfill unless otherwise provided in the geotechnical report.

It is preferable that the approach slab be designed and detailed so that the deck joint is provided at the roadway end of the approach slab. When located at the expansion end of the bridge and at integral abutments, the approach slab must be detailed to translate with the superstructure. When this is the intention of the design, the following details shall typically be incorporated into the approach slab detailing, as indicated in *Section 325.03 – Approach Slab Details*:

3. The deck joint shall be provided at the roadway end of the approach slab.
4. A controlled joint in the concrete, with a diagonal bent bar through the joint shall be provided at the bridge end of the approach slab. This detail will allow for rotation of the superstructure relative to the approach slab, while maintaining the ability of the approach slab to translate with the superstructure.
5. A sliding surface between the underside of the approach slab and the sleeper slab and fill shall be provided.
6. When the approach slab is detailed to span over the backwall, 1-inch-thick preformed cellular polystyrene joint material surface should be provided below the sliding surface provided to allow the approach slab to translate independently from the backwall.
7. When the approach slab extends over the approach wingwalls (U-wings), a 1-inch-thick preformed cellular polystyrene filler should be provided to allow the approach slab to move independently from the wingwalls.

It is preferred that the approach slab be detailed as full-width, matching the full width of the bridge deck. As such, the approach slab shall support the bridge barriers as they extend off of the bridge.

106.8 Steel Superstructure Design Considerations

Refer to *Section 103.4.1.1 – Structural Steel* for recommended types of steel bridges in Delaware.

New steel multi-girder bridges in Delaware shall be designed and constructed as composite with the concrete deck. Refer to *Section 106.3.1.1 – Considerations for Deck Haunch* for design factors associated with haunch thickness in relation to composite beam design. Longitudinal reinforcing steel in the concrete deck is not to be accounted for in the positive and negative moment regions as part of composite section properties.

106.8.1 Structural Steel – Material Requirements

106.8.1.1 *Grade 50 Steel*

For new steel bridges in Delaware, AASHTO M270, Grade 50 structural steel is to be used unless otherwise approved by the Bridge Design Engineer. Painting is required on this steel type. For painting requirements, refer to *Section 106.8.7 – Protective Coatings*.

106.8.1.2 *Weathering Steel*

AASHTO M270 grade 50W structural steels weather to preclude the need for painting. Weathering steel may be considered for structures over high traffic volume roadways or railroads where access for painting or repainting is limited or dangerous. The use of weathering steel is subject to approval by the Bridge Design Engineer.

Weathering steel should not be used in corrosive environments where there is high humidity or high concentrations of chloride. Refer to the FHWA Technical Advisory T5140.22, *Uncoated Weathering Steel in Structures* (1989), for further information.

The use of weathering steel must **NOT** be considered for the following conditions:

1. If the atmosphere contains concentrated corrosive industrial or chemical fumes.
2. If the steel is subject to heavy salt-water spray or salt-laden fog.
3. If the steel is in direct contact with timber decking; timber retains moisture and may be treated with corrosive preservatives.
4. If the steel is used for a low urban-area bridge or overpass that creates a tunnel-like configuration over a road on which de-icing salt is used. In this situation, road spray from traffic under the bridge causes salt to accumulate on the steel.
5. If the structure provides low clearance (less than 10 feet) over stagnant or slow-moving water.
6. Regions where there is constant dampness without drying of the steel.

Provide drip plates (also called drip tabs or drip bars) on outside face of exterior girder bottom flanges of weathering steel girders to divert water runoff from abutments and piers to protect from staining concrete. The drip plates should be located on the high side of piers and abutments, typically 5 feet away from the face of concrete substructures. The designer may increase the distance from the face of tall piers or abutments to limit the potential for wind-blown water to splash on the concrete surfaces.

Ensure that the edges of transverse stiffeners at the corners adjacent to the web and bottom flange are clipped to allow for proper ventilation and drainage. Stiffener details designed and fabricated in accordance with *Section 335.01 – Steel Beam Bridge Details* will provide for

proper ventilation and drainage. Do not detail deck drains to discharge water onto the steel. Therefore, the bottom of drainage pipes should preferably be at an elevation no higher than 1 foot below the bottom of the adjacent girders, unless not possible due to limited under-clearance. In the latter case, the bottom of drainage pipes should not be higher than the bottom of the adjacent girders.

Avoid the use of weathering steel on structures with open-grid decks.

Refer to *Section 106.8.7.1.1 – Painting of Weathering Steel* regarding the limits of zone painting and requirements for painting of weathering steel.

Refer to *Section 106.8.6 – Bolted Connections* for requirements associated with the use of bolted connections for weathering steel.

106.8.1.3 *High-Performance Steels*

AASHTO M270 high-performance steels, Grades HPS 70W and HPS 100W steel, are typically not recommended for use in conventional multi-girder steel bridge construction for spans less than 250 feet. As a general rule, if flange thickness remains in the range of 3 inches or less using Grade 50, the use of higher-strength steels is not recommended. Girder designs using higher-strength steel should NOT significantly increase deflections (flexibility of superstructure) in comparison to the same girder designed with Grade 50 steel.

One potential application of high-strength steel would be the use of HPS 70W steel as part of a hybrid girder. As an example, the use of HPS 70W steel for the top flange over the interior support of a two-span continuous-plate girder may be justified for improved strength, while having minimal change on girder deflections. Generally, however, the use of the same steel type throughout the bridge is preferred, unless cost savings can be justified.

For improved resistance to corrosion, resistance to fracture, and/or to achieve a higher factor-of-safety in design, high-performance steels (grades HPS 50W, HPS 70W, and HPS 100W) are to be used for steel members or elements designated as FCM or SRM. Refer to *Section 106.8.2.1 – Redundancy Requirements* for the description and design requirements for FCMs and SRMs.

106.8.2 Fatigue and Fracture Considerations

The material for all main load-carrying members of steel bridges subject to tensile stresses shall meet AASHTO requirements for notch toughness. Refer to Section A6.6.2 – Fracture and the Standard Specifications. Temperature Zone 2 shall be used to determine the minimum service temperature range in Delaware.

The Department does not permit the use of welded cover plates in the design of new beams, or for beam strengthening as a part of bridge rehabilitation. The Department allows the use of welded with end-bolted cover plates for beam strengthening as a part of bridge rehabilitation, but not for new construction.

Lateral gusset plates with intersecting welds at transverse stiffeners are prohibited. Such details are known to provide tri-axial constraint, which is a fracture-prone detail. Intersecting plates should not be used in new bridge design, but if required, the detail should provide clips in the lateral gusset plate at the girder web and transverse stiffener. The detail shall show a

minimum of a ½-inch gap between the vertical and horizontal weld toes at the intersection of the lateral gusset plate, girder web, and transverse stiffener.

Refer to *Section 109.9.3.4 – Fatigue Evaluation and Repair* for the evaluation and retrofit design for fatigue details on existing bridges.

106.8.2.1 *Redundancy Requirements*

Whenever practical, new multi-girder steel superstructures shall have a minimum of four longitudinal girders, unless approved by the Bridge Design Engineer.

The reduction or elimination of FCM shall be a goal of bridge designs. Refer to FHWA Memorandum, *Clarifications of Requirements for Fracture Critical Members* (2012); and FHWA-IF-12-052, *Steel Bridge Design Handbook: Redundancy* (2012). Redundancy may be classified in one of three ways:

1. Load Path
2. Structural (or System)
3. Internal

Whenever possible, steel superstructures shall incorporate members that meet the requirements for load path redundancy; for example, a minimum of four main longitudinal members, as part of a multi-beam or multi-girder system. All members that do not meet the requirements for load path redundancy shall be classified as either FCM, or as SRM. An SRM is a member that has demonstrated—through refined analysis—that the structure has adequate strength and stability if the member were removed, or if its primary load path were interrupted. Both FCMs and SRMs must be designed and fabricated to meet current AASHTO fracture control plan requirements.

SRMs must meet the requirements for structural redundancy proven through refined analysis, per NCHRP Report 406, *Redundancy in Highway Bridge Superstructures* (1998). If refined analysis is not performed, the members shall be classified as fracture-critical and load modifiers "η" used per Section A1.3.4 – Redundancy for design.

The Bridge Design Engineer shall approve the designation of SRM instead of FCM, and retain all necessary documentation for future inspections. Members designed as internally redundant, while good practice, are still recognized as FCM.

Although no difference will be permitted between FCM and SRM in fabrication, the SRM designation permits the exemption from fracture critical inspection requirements.

All tension elements on FCM shall be designated as "FCM" on the Plans. All tension elements on SRMs shall be designated as "SRM" on the Plans. SRMs should have a note included on the Plans to fabricate them in accordance with AWS D1.5 Chapter 12. Materials used for both FCMs and SRMs shall be as specified in *Section 106.8.1.3 – High-Performance Steels*.

106.8.2.2 *Welding and Weld Procedures*

Except for welding shear studs and bearing-sole plates to girder bottom flanges, field bolting should be designed and specified in lieu of field welding. Bolted connections shall be used for field splicing beams and girders. Welded field splices are not permitted.

When practical and feasible, fillet welds are preferred over groove welds. They are typically more cost-effective using manual or semi-automated welding equipment and joint preparation of the steel is eliminated.

When groove welds are required by design, weld symbols placed on the drawings should indicate "CJP" (complete joint penetration) in the tail to allow the fabricator choice of welding equipment, joint type (distortion control), plate preparation, and cost. However, when specific design requirements for weld inspection, finish, contour, limits, backing or field welding are necessary, the designer shall indicate such on the weld symbol. Refer to AWS A2.4, *Standard Symbols for Welding, Brazing, and Nondestructive Examination* (2007).

Additional inspection or nondestructive testing beyond the requirements of AWS D1.5 shall be specified by the designer.

Review and approval of all Welding Procedure Specifications (WPS) and Procedure Qualification Records (PQR) shall be done by DelDOT Materials and Research.

106.8.3 Steel-Rolled Beams and Plate Girders

Minimize the number of field splices. Field splices shall be at dead-load contraflexure points for continuous spans, where practical. Cost-effective design can often be realized with the use of flange or web transitions at field splice locations. For simple-span steel superstructures over 150 feet, field splices may be needed for shipping or erection. For such span configurations, a field splice should be made at one of the optimal locations for a flange and/or web transition.

The designer shall consider welded material transitions in plate girders (at locations other than at field splices), comparing labor and welding costs against potential material savings.

106.8.3.1 *Minimum Plate Thicknesses*

The minimum plate and member thickness to be used for primary and secondary permanent elements shall be 3/8 inch.

For plate girders, use a minimum flange plate thickness of 3/4 inch. For minimum thickness of plate girder webs, refer to *Section 106.8.3.2.1 – Plate Girder Webs.*

106.8.3.2 *Plate Girder Geometric Proportionality – General Practice*

106.8.3.2.1 Plate Girder Webs

For web depth requirements and recommendations, refer to *Section 103.4.1.1 – Structural Steel*. A minimum plate thickness of 7/16 inch is recommended for plate girder webs. Web thickness shall vary in 1/16-inch increments.

Plate girder web depths shall vary in whole-inch increments.

106.8.3.2.2 Plate Girder Flange Width

For straight girders, a flange width of approximately one-fourth of the web depth is typically recommended. Generally, the use of flanges less than 15 inches wide is not recommended, to reduce warping during fabrication and improve stability during transportation and erection. Although not common, the use of 12-inch-wide flanges may be acceptable for short spans; and if means of ensuring stability during fabrication, transportation, and erection are specified.

For horizontally curved girders, flange width should be proportioned to approximately one-third the web depth. The extra flange width for curved girders enhances handling stability and helps keep lateral bending stresses within reason.

It is generally best practice to maintain a constant flange width for each girder field section, and make flange width transitions only at field splices. All girders should have the same flange width increase at the same field splice location. Adjacent girders should have the same flange width dimension to simplify slab formwork, and to prevent variation in diaphragm or cross-frame geometry at interior bearings.

Flange-width increments should be in whole inches.

Top and bottom flange widths may be different for composite beams/girders.

106.8.4 Shear Connectors

Welded stud-type shear connectors are to be used for both positive and negative moment regions. Studs with a 0.875-inch diameter are recommended in the typical configuration illustrated in *Section 335.01 – Steel Beam Bridge Details.* The maximum stud spacing is 2 feet, including the negative-moment regions. Shear studs shall be placed in a minimum of two rows.

106.8.5 Stiffeners, Diaphragms, and Bracing

Refer to *Section 335.01 – Steel Beam Bridge Details* for standard detailing for stiffeners, diaphragms, and cross-frames.

Transverse stiffeners are provided for one—or a combination of—the following purposes: bearing stiffener, jacking stiffener, intermediate stiffener, and connection plate for diaphragm or cross-frame connections.

For girders with webs less than or equal to 4 feet 6 inches in depth, it is preferable not to use intermediate stiffeners. For girders with webs deeper than 4 feet 6 inches, the web thickness may be increased to limit the transverse stiffeners to only one or two locations near supports beyond those provided for diaphragm or cross-frame connections. Transverse stiffeners must be a minimum of 3/8-inch thick. Stiffeners shall be welded to the web with a minimum 5/16-inch continuous-fillet weld on each side of the stiffener. Intermediate stiffeners shall be welded to the compression flange, and tight-fit to the tension flange.

Transverse stiffeners that are used as connection plates for diaphragms, floorbeams, or cross-frames are to be tight-fit and fillet-welded to both the top and bottom flanges.

Bearing stiffeners shall either be mill-to-bear and fillet-welded to both the top and bottom flanges; or connected to the top and bottom flanges with full-penetration groove welds. The mill-to-bear and fillet-welded connection is preferred.

Longitudinal stiffeners are typically not economical for modern design of multi-girder spans of less than 250 feet, and are generally not recommended unless proven to be economically justifiable compared to thickening the web and/or providing additional transverse stiffeners. When longitudinal stiffeners are necessary, it is preferable for longitudinal stiffeners to be placed on the opposite side of the girder web from the transverse stiffeners. When a longitudinal stiffener must be on the same side of the web as transverse stiffener(s), the longitudinal stiffener shall be continuous through the transverse stiffener. The transverse stiffener should be made discontinuous at the joint, with a tight fit provided on the top and bottom of the longitudinal stiffener. Longitudinal stiffeners are unnecessary in tension zones, and should be avoided in stress reversal zones. Refer to *Section 335.01 – Steel Beam Bridge Details.*

Transverse stiffeners shall be chamfered at intersections with flanges and longitudinal stiffeners to prevent intersecting welds.

Refer to *Section 106.8.9.1.2 – Construction Loading Conditions* for lateral bracing considerations.

106.8.6 Bolted Connections

High-strength 7/8-inch-diameter AASHTO M 164 (ASTM A325) bolts shall be used for the design of bolted connections, unless detailing, constructability, or cost justification is given for the use of alternative size or strength (ASTM A490) bolts. It is preferable that all bolts on a bridge be of the same diameter and strength. Avoid the use of bolts over 1 inch in diameter for structural steel member connections, which require large-installation torques.

Unless approved otherwise by the Bridge Design Engineer, all bolted connections shall be designed as slip-critical connections. Class B faying surface shall typically be used in design. It is important to note that when Class B faying surface is used in design, requirements for testing the paint system must be stated on the contract drawings or construction specifications. Class B faying surface is to be used for unpainted weathering steel and Class C for galvanized steel faying surface, consistent with AASHTO LRFD recommendations. The faying surface classification used in the design shall be provided in the general notes of the bridge design plans.

AASHTO Type 1 M 164 (ASTM A325) and M253 (ASTM A490) bolts are to be mechanically galvanized in accordance with ASTM B695 Class 50, Type 1, and painted after installation. Mechanical fasteners made of AASHTO M 164 and M 253 Type 3 weathering steels are suitable for weathering steel bridges. Do not use galvanized carbon-steel bolts for weathering steel bridges. Load indicator washers are not recommended for use with weathering steel bolts.

Twist-off bolt assemblies (ASTM F1852) are permitted by the Department.

106.8.7 Protective Coatings

The designer is responsible for proposing the appropriate protective coating for steel, specific to each project. As part of the selection of the protective system, the designer shall consider design, construction, and future maintenance implications associated with the protection system, such as requirements for surface preparation, application, permissible shop and/or field applications, time allowances between coats, and containment systems.

Paint systems and painting requirements as provided in this Manual, shall be provided in the general notes on the bridge design plans.

106.8.7.1 *Paint Systems*

Unless the specifics of the project warrant otherwise, the paint systems specified for use on steel bridges shall match those specified in the Standard Specifications. The types of paint systems, with their associated general applications for use, as presented in the Standard Specifications are provided below:

1. Type 1 (New Structural Steel): Use a paint system from NEPCOAT Qualified Products List A for shop-painted new structural steel.
2. Type 2 (Re-painting of Existing Structural Steel): Use a paint system from NEPCOAT Qualified Products List B for field-painting structural steel.
3. Type 3 (Overcoating of Existing Painted Structural Steel): Use a paint system from NEPCOAT Qualified Products List M for over-coating existing painted structural steel.
4. Type 4 (Painting of Galvanized Steel): Use an MIO aluminum moisture-cured urethane paint system from NEPCOAT Qualified Products List M for painting galvanized steel surfaces.

Only the primer coat (Type 1 primer coat) shall be applied to the steel within the limits of the steel-to-steel faying surface, except for weathering steel. Where concrete is to be in contact with steel, such as the top of a girder top flange, only the primer coat shall be applied to the steel within the limits of the steel-to-concrete mating surface, except for weathering steel.

All crevices where pack rust could form or which could exhibit pack rust shall be treated with a 100 percent solids penetrating sealer, and sealed using a paintable caulk. At a minimum, the caulk must be painted with one coat of topcoat color.

106.8.7.1.1 Painting of Weathering Steel

To minimize deterioration due to salt spray, it is required to paint the exterior face and top and bottom surfaces of bottom flange (each side of web) of weathering steel fascia beams for spans over highway traffic. Refer to fascia girder painting limits detail in *Section 335.01 – Steel Beam Bridge Details*. To minimize staining of concrete abutments and piers, all weathering steel members, including bearings, shall be zone-painted to a length of at least 1.5 times the web depth, or a minimum of 10 feet from the face of the concrete substructure, whether a joint is present or not.

The bridge design plans shall indicate or specify the limits of zone painting of weathering steel.

The paint system to be used on weathering steel shall conform to Type 1 or 2, as appropriate.

Weathering steel to concrete mating surfaces and weathering steel to weathering steel faying surfaces are to be left uncoated.

Painting of the interior surfaces of weathering steel tub and box members is recommended for future inspectability.

Prior to recoating of weathering steel, the designer is responsible for evaluation of contaminants, requirements for surface preparation of weathering steel, and specifying a compatible paint system with the substrate.

106.8.7.1.2 Painting of Galvanized Steel

Galvanized steel is only to be painted when appropriate for aesthetic purposes. When painting of galvanized steel is required, galvanized steel surfaces shall be painted with moisture-cured aluminum paint (Paint System Type 4) to ensure adherence to galvanized steel surfaces.

Prior to recoating galvanized steel, the designer is responsible for specifying the requirements for the removal of existing paint, surface preparation, and specifying a paint system.

106.8.7.1.3 Paint Color

Except as noted below, Standard Color No. 24172 (Green), Federal Standard No. 595C, is to be specified on the Plans. Alternatively, the use of Standard Color No. 10059 (Brown), Federal Standard No. 595C, may be used on approval.

The paint color associated with zone-painting weathering steel below deck joints and/or over substructures shall be specified to match the color of the weathered steel, Standard Color No. 10059 (Brown), Federal Standard No. 595C.

Interior surfaces of steel tub and box members shall be painted Standard Color No. 27875 (White) in accordance with Federal Standard 595C. The light color increases illumination inside the tub and box sections, improving detection of corrosion and cracks in the steel members.

The use of other colors requires approval from the Bridge Design Engineer, with documentation as to the reasons for the change.

106.8.7.2 *Galvanization*

The following items should typically be galvanized:

1. Bolts, nuts, and washers, except when used with weathering steel
2. Steel extrusions for strip seal joints
3. Deck joint structural steel and deck joint support members
4. Deck joint plates, including tooth dam plates and barrier slider plates
5. Sign structures
6. Steel downspouting

Galvanization of other structural steel elements is to be approved by the Bridge Design Engineer.

106.8.8 Steel-Plate Girder and Rolled Beam Bridges

106.8.8.1 *Method of Analysis*

The method of analysis, 1-D line girder, 2-D grid, or 3-D finite element analysis, used in the design of steel I-beam bridges, is dependent on several factors, including skew and curvature of the structure, span length, bridge width, steel framing, and structure stiffness. Two-dimensional grid analysis is considered a higher level of analysis than line-girder analysis; and 3-D finite element analysis is considered a higher level of analysis than 2-D grid analysis. The appropriate method of analysis required for design should be chosen by the Designer following the procedures outlined in *Section 106.8.8.1.1 – Determination of Appropriate Analysis Method using NCHRP Report 725*.

For bridges where line-girder analysis is deemed appropriate, it should be used in conjunction with live-load distribution factors and skew adjustment factors found in Section A4.6.2.2.2 – Distribution Factor Method for Moment and Shear and Section A4.6.2.2.3 – Distribution Factor Method for Shear. The V-Load 1-D analysis method is not permitted for final design of curved girder structures.

If using 2-D grid analysis, improvements in the accuracy of the analysis shall be made by incorporating two enhancements into the model:

1. In lieu of the St. Venant torsional constant, *J*, the equivalent torsional constant, J_{eq}, a better approximation of girder torsional stiffness, shall be used.

   For cases where the flange warping is fully fixed at the beam ends (interior girder segment), the equivalent torsional constant is equal to:

$$J_{eq(fx-fx)} = J\left[1 - \frac{\sinh(pL)}{pL} + \frac{[\cosh(pL) - 1]^2}{pLsinh(pL)}\right]^{-1}$$

   For cases where the flange warping is fully fixed at one end and free at the other end (exterior girder segment), the equivalent torsional constant is equal to:

$$J_{eq(fr-fx)} = J\left(1 - \frac{\sinh(pL)}{pLcosh(pL)}\right)^{-1}$$

   where:

   L = distance between cross frames

   J = St. Venant torsional constant for the girder cross section

   p = $\sqrt{\frac{GJ}{EC_w}}$

2. For modeling of a cross-frame as a beam element in a 2-D grid model, the shear deformable (Timoshenko) beam element should be used. Refer to *NCHRP Report 725* for the determination of the properties of the Timoshenko beam element.

Analysis shall verify that uplift does not occur at any bearing at any limit state. For curved bridges, the torsion index "I_T" should be kept less than 0.65 to avoid uplift at the inside bearings. As a general rule, a minimum of 10 percent of the dead load reaction should be

maintained under live load. However, if the bearing design requires a minimum positive reaction beyond 10 percent of the dead load reaction, that minimum vertical reaction should be provided in the design and verified by analysis at the service load limit states.

Refer to *Section 106.8.9.1.3 – Cross-Frame Detailing Methods* for requirements associated with web-plumbness and presentation of out-of-plane girder rotations for severely skewed and horizontally curved superstructures.

Note that when 2-D grid analysis or 3-D finite element analysis methods are used for the analysis and design of horizontally curved and/or skewed steel superstructures, the designer shall provide a table of live-load distribution factors on the design plans that can be used with a line girder analysis to replicate the response of the structure for the purpose of future simplified analysis and load ratings.

106.8.8.1.1 Determination of Appropriate Analysis Method using NCHRP Report 725

The designer is responsible for selecting an effective and efficient method(s) of analysis for the design of curved and skewed steel girder bridges. The basis of method selection shall be NCHRP Report 725 *Guidelines for Analysis Methods and Construction Engineering of Curved and Skewed Steel Girder Bridges* (2012), applied to the specific factors of the project in design. Included in this selection should be the selection of quality control checking. The method of analysis is to be identified in the preliminary design phase of the project, as stated in *Section 103.3.6 – Bridge Skew*.

While NCHRP Report 725 appears to be focused toward determining the level of analysis required for construction analysis, this report is also applicable for assessing the appropriate level of analysis in design. The report, including appendices, is located in the DelDOT DRC.

NCHRP Report 725 uses four key bridge response indices for characterizing the effects of curvature and skew and the ability of simplified methods to capture these effects. The indices and associated ranges where simplified methods of analysis tend to produce unacceptable levels of error associated with various structure responses. Refer to NCHRP Report 725 for further commentary on the following indices and their significance to choosing the appropriate method of analysis. The designer is to use the highest level of analysis recommended among the four indices – with the lowest level of analysis being 1-D line girder analysis and 3-D finite element analysis being the highest. The four indices, with associated ranges identifying where higher level of analysis is appropriate, are provided below:

1. The Skew Index, I_S, defined as:

$$I_s = \frac{w_g \tan\theta}{L_s}$$

where:
w_g = width of the bridge measured between the centerline of fascia girders
θ = largest skew angle of supports
L_s = span length

For multi-span bridges I_s must be calculated for each span and the largest value applied to the entire structure.

For bridges with $I_s < 0.3$, the effects of skew are small. For bridges with $0.3 \leq I_s < 0.65$, skew has a significant influence and flange lateral bending stresses can observe significant errors for lower levels of analysis. When a structure has $I_s \geq 0.65$, the effects of skew are significant, where flange lateral bending stresses, major axis bending stresses and vertical displacements can observe significant errors for lower levels of analysis.

2. The Connectivity Index, I_C, defined as:

$$I_c = \frac{15{,}000}{R(n_{cf} + 1)m}$$

where:

R = radius of curvature of the bridge centerline in units of feet.

m = constant equal to 1.0 for simple-span bridges and 2.0 for continuous-span bridges

n_{cf} = number of intermediate cross-frames within the span

For multi-span bridges, R and n_{cf} can vary between spans and therefore I_c must be calculated for each span and the largest value applied to the entire structure.

For curved bridges with radial supports and $I_c < 1.0$, the anticipated error associated with 2-D grid analysis tends to be small. When a structure has $I_c \geq 1.0$, errors associated with curvature tend to become more significant when using conventional 2-D grid analysis. For bridges with combinations of curvature ($I_c > 0.5$) and skew ($I_s > 0.1$), analysis error tends to become significant when using conventional 2-D grid analysis.

3. The Torsion Index, I_T, is a measure of the potential uplift at bearings and is defined as:

$$I_T = \frac{s_{ci}}{s_{ci} + s_{co}}$$

where:

s_{ci} = distance between the centroid of the deck and the chord between the inside fascia girder bearing locations, measured at the bridge mid-span perpendicular to a chord between the intersections of the deck centerline with the bearing lines

s_{co} = distance between the centroid of the deck and the chord between the outside fascia girder bearing locations, measured at the bridge mid-span perpendicular to a chord between the intersections of the deck centerline with the bearing lines

For bridges with $I_T < 0.65$, the structure is not susceptible to uplift at inside bearings. When a structure has $I_T \geq 0.65$, the structure becomes susceptible to uplift at the inside bearings and therefore a higher level analysis should be used to more accurately determine the potential for uplift.

4. The global second-order amplification factor, AF_G, which scales the linear response obtained from first-order analyses to determine the second order effects. This index aids the designer in determining whether second-order effects need to be included. The amplification factor is defined as:

$$AF_G = \frac{1}{1 - \frac{M_{maxG}}{M_{crG}}}$$

where:

M_{maxG} = maximum total moment supported by the bridge unit for the loading under consideration

M_{crG} = elastic global buckling moment of the bridge unit = $C_b \frac{\pi^2 sE}{L_s^2}\sqrt{I_{ye}I_x}$

C_b = moment gradient modification factor applied to the full bridge cross section moment diagram

s = spacing between the two outside girders of the unit

E = modulus of elasticity of steel

I_{ye} = effective moment of inertia of the individual I-girders about their weak axis = $I_{yc} + (b/c)I_{yt}$

I_{yc} = moment of inertia of the compression flange about the weak axis of the girder cross section

I_{yt} = moment of inertia of the tension flange about the weak axis of the girder cross section

b = distance from the mid-thickness of the tension flange to the centroidal axis of the cross section

c = distance from the mid-thickness of the compression flange to the centroidal axis of the cross section

I_x = moment of inertia of the individual girders about their major axis of bending

For bridges with $AF_G < 1.1$, second-order effects are minimal and can be ignored. For bridges with $1.1 \leq AF_G < 1.25$, second-order effects should be included. When a structure has $AF_G \geq 1.25$, second-order effects are significant and 3-D finite element analyses should be used.

106.8.8.2 *Diaphragms/Cross-Bracing*

The recommendations of Section A6.7.4 – Diaphragms and Cross-Frames shall be used in the design, detailing, and spacing of diaphragms and/or cross-frames—with a preference towards minimizing the number of diaphragms or cross-frames for straight multi-beam bridges.

For structures deemed feasible for design by line girder analysis, cross-frame and/or diaphragm members and their connections typically do not need to be designed. Use cross-frames and/or diaphragm typical details from *Section 335.01 – Steel Beam Bridge Details* if within the geometric limits defined in the typical details.

For horizontally-curved and/or significantly skewed ($I_s \geq 0.3$) steel superstructures, diaphragm and/or cross-frame members and their connections are considered primary structural members and connections. Therefore, they shall be designed for the loads determined by analysis. Although the configurations and general design and detailing concepts presented in the standard diaphragm and cross-frame details in *Section 335.01 – Steel Beam Bridge Details* should be followed, the members and their connections shall be designed or verified.

For structures with parallel supports at skews less than or equal to 20 degrees, the cross-frames shall be oriented parallel to the centerline of bearings. For support skews of varying skew angles less than 20 degrees, consideration should be given to framing the interior

diaphragms/cross-frames perpendicular to the centerline of the girders. For horizontally curved steel superstructures and/or superstructures with skews greater than 20 degrees, it is generally preferred that the interior cross-frames or diaphragms be oriented radially/perpendicular to the girders. Likewise, when practical, it is preferred that the cross-frames or diaphragms be aligned radially/perpendicular to the girders and framed into the fixed or guided expansion bearings at interior supports. Refer to *Section 106.8.8.3 – Bearings for Horizontally Curved and/or Skewed Steel Superstructures* for bearing type and bearing configuration recommendations for horizontally curved and/or skewed steel superstructures.

End diaphragms/cross-frames shall always be aligned with the centerline of bearing along the end support.

Selectively omitted diaphragms/cross bracings near supports to reduce unwanted transverse stiffness ("nuisance stiffness") between girders and the use of "lean-on" type bracing concepts may be permitted only if approved by the Bridge Design Engineer.

106.8.8.3 *Bearings for Horizontally Curved and/or Skewed Steel Superstructures*

Bearings with multi-rotational capabilities shall be used for horizontally curved and/or skewed (with $I_s > 0.3$) steel superstructures. Multi-rotational bearing types include circular elastomeric bearings and HLMR bearings, which include pot bearings and disc bearings.

For horizontally curved and/or skewed (with $I_s > 0.3$) steel superstructures, the following shall be used as a guide in the layout of bearings at substructure units:

1. At fixed bearing lines, provide two fixed bearings at the two interior-most girders for cross sections with an even number of girders. Provide three fixed bearings at the three interior-most girders for cross sections with an odd number of girders. Provide unguided expansion bearings for support of the remaining girders in the cross section. For purposes of redundancy (with the exception of extreme load cases), it is recommended that each fixed bearing be designed to carry all of the horizontal loads (lateral and longitudinal loads).

2. At expansion bearing lines, provide two guided expansion bearings at the two interior-most girders for cross sections with an even number of girders. Provide three guided expansion bearings at the three interior-most girders for cross sections with an odd number of girders. Provide unguided expansion bearings for support of the remaining girders in the cross section. For purposes of redundancy (with the exception of thermal loads and extreme load cases), it is recommended that each guided expansion bearing be designed to carry all of the lateral loads. Align the guides for guided bearings in the direction that the superstructure tends to thermally translate, as though the bearings were unguided. The direction of thermal movement should be determined from the advanced analysis (2-D grid or 3-D finite element analysis) used in the design of the superstructure. The transverse component of movement must be accounted for in the design of the deck joint, as applicable. Note also that if the guides are not oriented in the direction that the bridge tends to move thermally (as if unguided), then the bearings (including the guides) must be designed for thermal forces induced as a result of redirecting the superstructure movement in the guided direction.

Refer to *Section 106.10 – Bearings* for additional requirements to be incorporated into the final design of bearings.

106.8.9 Erection Analysis and Erection Plans

106.8.9.1 *Requirements for Designer*

Structural analysis shall be performed and conceptual sequential structural steel erection plans and procedures shall be included on the bridge design drawings for the following conditions:

1. Structure with one or more spans over 200 feet.
2. Horizontally curved structures, and/or when advanced analysis (2-D grid or 3-D finite element analysis) is used in the design, per *Section 106.8.8.1.1 – Determination of Appropriate Analysis Method using NCHRP Report 725*.
3. Where temporary supports, complex falsework, and/or conditions where multi-crane operations are anticipated to be required for the bridge erection.
4. For erection over freeways, where MOT and/or lane closures are anticipated to be required during erection.
5. For erection with potential for conflict and/or coordination with railroads or overhead utilities.

106.8.9.1.1 Erection Plan Details

A conceptual erection plan is to be provided on the Plans and detailed as needed to establish constructability and construction cost. The conceptual erection plan need only portray one possible method of erection. The erection plan should show the following information, as applicable to the project:

1. Suggested construction sequence for the erection of field sections.
2. Crane footprint for erection of field sections associated with the suggested erection plan, as needed for constructability and/or MOT.
3. Crane picks in terms of single-girder or two-girder picks, as applicable or as needed for girder stability. Provide table of associated pick weights.
4. Suggested layout and conceptual design of temporary support systems, per AASHTO's *Guide Design Specification for Bridge Temporary Works* (1995).
5. Requirements for stability/bracing of girders during erection. The actual number of bolts required at connections for bracing and splices, prior to release of crane, is not to be the requirement of the designer. This shall be the requirement of the Contractor as part of his erection plans.
6. Limits of right-of-way, suggested means for construction access and staging areas, and limits of temporary easements, as required.
7. MOT/rail operations during erection of field sections. This should include any requirements for detours, outages, etc. Provide list of outages in terms of number of outages required and requirements for overnight and/or time duration for each outage.

8. Locations of potential conflicts associated with underground or overhead utilities, specifying means for avoidance, mitigating risk of interference, conceptual layout for temporary utility relocation, and/or design of permanent utility relocation.

Refer to *Section106.8.9.1.3 – Cross-Frame Detailing Methods* for additional considerations associated with significantly skewed and horizontally curved superstructures.

Items listed in *Section 106.8.9.2 – Erection Submittal Requirements for Contractor's Engineer* that are not listed above shall typically NOT be the responsibility of the design engineer; however, the designer shall ensure that requirements of the Contractor are incorporated into the contract documents, as applicable.

106.8.9.1.2 Construction Loading Conditions

Structural analysis shall be performed for load combinations of dead load and wind, in accordance with AASHTO LRFD for the Strength III and Service I Load Combination. The analysis shall conservatively include the weight of the non-composite deck, unless provisions for staged composite behavior are provided and required in the Contract Documents. Allowable lateral deflections under wind loading shall not exceed L/150. Means for calculating lateral stresses in girder flanges and lateral deflection may be through 2-D or 3-D analysis methods, or by approximate methods outlined in Section A4.6.2.7 – Lateral Wind Load Distribution in Multi-beam Bridges. Lateral flange stresses due to horizontal curvature and/or skew (for skews over 20 degrees) shall be superimposed with lateral stresses due to wind, as applicable.

The need for lateral bracing as part of the wind resistance system in the bridge's final configuration (after construction of a composite deck system) is generally not required and not desired. The preference is for the system to be designed to resist wind loads through diaphragm action in the composite bridge deck, and with the cross-frames/diaphragms at the supports being designed to carry the wind loads to the bearings. If lateral bracing is required to resist wind loads during construction, the design and detailing of the lateral bracing is to be performed during the design phase. The contract drawings must state whether the lateral bracing members are to be removed, or if they are to remain after the construction of the bridge deck. If to remain, the designer must design and detail the lateral system for all applicable AASHTO LRFD limits states, not only for combinations of dead load and wind load. The connection detail shall be such that it does not impart high local stresses in the girder or create problematic distortion-induced fatigue or fracture-prone details. Refer to *Section 335.02 – Steel Beam Framing Plan Details* for conceptual details for lateral bracing.

In lieu of the base wind pressures corresponding to 100 miles per hour wind as provided in Section A3.8.1.2.1-1 – Base Pressures, P_B, Corresponding to V_B = 100 miles per hour the designer may calculate the base pressure corresponding to AASHTO Eq. 3.8.1.1-1 for wind design prior to completing construction of the composite concrete deck. Well-proportioned girder flanges, as prescribed in *Section 106.8.3.2.2 – Plate Girder Flange Width*, should generally be sufficient to resist wind in the non-composite condition for spans under 200 feet. If the as-designed steel superstructure is overstressed, unstable, or lateral deflections exceed L/150, or temporary lateral bracing is required for 100 miles per hour wind during construction, a reduced wind speed of 60 miles per hour may be used. Design of alternative support for wind speeds above 60 miles per hour shall be the responsibility of the Contractor, and shall be stipulated as such in the Contract Documents, as applicable. If less than 100

miles per hour, the design wind speed used for the construction condition, prior to completed construction of the composite deck, shall be provided on the Plans.

The designer shall generally prohibit unusual construction loading conditions in the contract documents; however, if unusual construction loading or placement of construction materials on the structure is anticipated to be required for construction, the designer shall verify such conditions during design, and require the Contractor to also verify. Such requirements shall be incorporated into the contract documents.

106.8.9.1.3 Cross-Frame Detailing Methods

The designer is responsible for specifying the dead load condition at which the girder webs are approximately plumb from one of the following conditions:

1. No-load fit (NLF)
2. Steel dead load fit (SDLF)
3. Total dead load fit (TDLF)

The condition specified will determine the initial lack-of-fit, effort to connect the cross-frames to the girders, and resulting locked-in stresses in the final position.

As a general rule, the following selections for I-girder bridges may be considered initially by the designer:

1.	Straight, skewed, all spans, IS < 0.30:	use TDLF
2.	Straight, skewed, spans < 200 feet, IS > 0.30:	use TDLF
3.	Straight, skewed, spans ≥ 200 feet, IS > 0.30:	use SDLF*
4.	Curved, radial bridges, all spans:	use SDLF**
5.	Curved, skewed, spans < 200 feet:	use SDLF***
6.	Curved, skewed, spans ≥ 200 feet:	use SDLF

* For straight, skewed spans greater than 200 feet, TDLF may be considered as an improved alternate if cross-frame fit-up during steel erection is not anticipated to be excessively difficult. Determining difficulty of cross-frame fit-up shall be based on consultation with steel erectors during design, taking into account differential deflection of girders (creating the need to rotate the girders out-of-plane to connect the cross-frames) at the time of erection.

** On curved, radial bridges where mid-span girder layover is not anticipated to be excessive, and therefore cross-frame fit-up during erection is not anticipated to be difficult, NLF may be considered as an alternative to SDLF as a means to minimize cross-frame forces.

*** For minor curvature and sharp skews (Is > 0.30), TDLF may be considered an improvement over SDLF.

Refer to NCHRP Report 725 for the description of the above load conditions, cross-frame fit, design considerations and recommendations regarding which load condition to specify for various structural configurations and structural behavior. For significantly skewed and

horizontally curved superstructures, a table similar to the table of dead-load deflections shall also be provided for predicted out-of-plane girder rotations. The out-of-plane rotations for self-weight, non-composite dead loads and composite dead loads shall be provided at span 10th points.

106.8.9.2 *Erection Submittal Requirements for Contractor's Engineer*

The bridge designer shall anticipate the erection submittal requirements of the Contractor as stipulated in the Standard Specifications, and supplement the requirements with Special Provisions, as recommended in the Manual and/or as required for the project.

For the five conditions stipulated in *Section 106.8.9.1 – Requirements for Designer,* or as required for the project, the designer shall specify on the Plans that an erection submission by the Contractor be signed and sealed by a Professional Engineer licensed in the State of Delaware, and submitted for approval in accordance with Standard Specifications. The erection submittal shall be specified on the contract drawings to include the following items, as applicable for the project:

1. Erection plan and sequence for the sequential erection of field sections.
2. Placement and size of crane for erection of field sections associated with the suggested erection plan.
3. Indicate crane picks in terms of single-girder or two-girder picks, as applicable or as needed for girder stability. Provide table of associated pick weights. Erection submittal shall include crane charts for review and correlation.
4. Design of temporary support systems, per *Guide Design Specification for Bridge Temporary Works*.
5. Requirements for stability/bracing of girders during erection. Note that when the Contractor intends to partially complete bolted connections during stages of the erection, the Contractor shall provide calculations to support the temporary conditions.
6. Limits of right-of-way, means for construction access and staging areas, and limits of temporary easements, as required.
7. Show maintenance of highway traffic and/or railroad limits/rail operations during erection of field sections. This should include any requirements for detours, outages, etc. Provide list of outages in terms of number of outages required and requirements for overnight and/or time duration for each outage.
8. Locations of potential conflicts associated with underground or overhead utilities, specifying means for avoidance, mitigating risk of interference, and/or temporary or permanent relocations.
9. The Contractor will also be responsible for the design of temporary support systems and for design of the structure during all stages of construction, including conditions where members and/or connections are partially constructed.

10. The Contractor's design shall be in accordance with *Section 106.8.9.1 – Requirements for Designer*, and no less than what is required in the most recent edition of the *Guide Design Specifications for Bridge Temporary Works*.

11. Contract documents shall specify that the contractor shall not perform the erection until review and approval of the erection submittal is received.

106.8.10 Deck Placement Sequence Analysis and Design

Deck placement sequence analysis and design shall be required for multi-span continuous steel bridges. Refer to *Section 106.4.2.6 – Deck Placement Sequence* for deck placement analysis requirements.

106.9 Prestressed Concrete Bridge Superstructures

106.9.1 Materials

Precast, prestressed concrete members should be designed with structural design strength (f'_c) between 5 kips per square inch and 10 kips per square inch. For use of design strengths greater than 8 kips per square inch, there must be a clear economic advantage to be gained. Justification for using structural design strength greater than 8 kips per square inch must be submitted at the TS&L stage for approval. Refer to *Section 205.4.2.1 – Compressive Strength* for additional information regarding concrete strengths to be used.

Lightweight concrete shall not be used for precast, prestressed concrete beams.

Reinforcing steel shall conform to the requirements of AASHTO M31/M31M, Grade 60. The minimum-size reinforcing shall be No. 4 bar.

Prestressing steel shall be high-strength 7-wire low-relaxation strands, with nominal 0.5- or 0.6-inch diameter, and conform to AASHTO M203, Grade 270, low-relaxation. Do not use stress-relieved strands. The use of straight-strand configurations is preferred over draped-strand configurations.

Bars used for post-tensioning systems should conform to the requirements of ASTM A 722. This specification covers both plain and deformed bars.

For post-tensioned structures, the designer shall specify that all strands will be uncoated, and all ducts shall be pressure-grouted.

Ducts for post-tensioning systems may be either rigid or semi-rigid, and made of ferrous metal or polyethylene. They may also be formed in the concrete with removable cores. The use of polyethylene ducts is generally recommended for corrosive environments. Polyethylene ducts should not be used on radii less than 30 feet because of the polyethylene's lack of resistance to abrasion during pulling and tensioning the tendons. The inside diameter of the duct should be at least a 1/4 inch larger than the diameter of single-bar or strand tendons. For multiple-bar or strand tendons, the inside cross-sectional area of the duct should be at least twice the net area of the prestressing steel. Where tendons are to be placed by the pull-through method, the duct area should be at least 2.5 times the net area of the prestressing steel.

106.9.2 Design Methodology

Precast, prestressed concrete beams shall be designed for service limit state for allowable stresses and checked for strength limit state for ultimate capacity.

106.9.2.1 *Design Methodology*

Unless significant differential settlement between supports is anticipated, all multi-span prestressed concrete superstructures shall be made continuous for live load. A minimum girder age of at least 90 days is required when continuity is established. Establishing continuity prior to 90 days requires prior approval from the Bridge Engineer. Minimum age of girder at establishment of continuity shall be shown on the Contract Documents.

DelDOT's practice is to establish the continuity connection at the same time as the placement of the deck concrete. Therefore, dead load due to the deck concrete will be resisted by the prestressed beams as simply supported. All loads applied after the deck concrete cures will be resisted by the continuous composite structure.

Precast, prestressed concrete beams shall be designed for the envelopes of simple- and continuous-span loadings for all permanent and transient loads. Loads applied prior to establishing continuity need only be applied as a simple-span loading. Continuity reinforcement shall be provided at supports for loads applied after establishing continuity.

106.9.3 Diaphragm Requirements

Diaphragms serve two purposes when used with prestressed beams:

1. Construction Stage: During the construction stage, diaphragms help to provide beam stability for pouring the deck slab.
2. Normal Operation: During the life of the bridge, diaphragms act to distribute load, and are particularly advantageous for distribution of large overloads. Diaphragms also improve the structures resistance to impact loads from over-height vehicles traveling under the structure.

Diaphragms for prestressed beams shall be cast-in-place or precast concrete for spread box beam and NEXT beam bridges. Diaphragms for PCEF bulb-tee beams may be either cast-in-place concrete, precast concrete, or steel diaphragms. Steel diaphragms for PCEF bulb-tee bridges are permitted with approval of the Bridge Design Engineer. Concrete end diaphragms shall be provided at all bearing lines. Interior diaphragms shall be provided for all prestressed beam bridges with recommended diaphragm spacing, as shown below:

1. 1/4 points of span for 120 feet < span length ≤ 160 feet
2. 1/3 points of span for 80 feet < span length ≤ 120 feet
3. Mid-point of span for 40 feet < span length ≤ 80 feet
4. No diaphragms required for span lengths ≤ 40 feet

106.9.4 Minimum Spacing of Prestressing Tendons

Spacing of prestressing strands shall typically be at 2-inch increments. The minimum spacing between prestressing strands shall be the larger of:

1. Center-to-center spacing of 2 inches; or
2. Clear distance of 2 times the maximum size of aggregate.

Prestressing strands may be bundled in a vertical plane at—and between—hold-down devices, provided that the spacing, specified herein, is maintained between individual strands near the ends of the beams for a distance not less than the maximum shielded length plus development length.

Groups of eight strands of 0.5 or 0.6 inch in diameter or smaller may be bundled linearly in a vertical plane at and between hold-down devices. The number of strands bundled in any other manner shall not exceed four.

106.9.5 Tensile Stresses Due to Prestressing

If higher-than-allowable tensile stresses are encountered during the design of prestressed members (top surface at beam ends), the following design modifications are suggested:

1. De-bond strands at the end of the unit to reduce the overstress. When de-bonding is required, the following criteria shall be followed in addition to that specified in Section A5.11.4.3 – Partially Debonded Strands:
    a. No more than 40 percent of the total number of strands in any one row may be de-bonded, per Section A5.11.4.3 – Partially Debonded Strands. The number of de-bonded strands may be rounded to the next higher number for the case of an odd number of strands in a row; however, ensure the de-bonding pattern is symmetrical about the vertical centerline of the beam;
    b. The maximum number of cut-off points shall be limited to six;
    c. A minimum of 12 inches shall be provided between cut-off points;
    d. De-bonding of adjacent strands in the same row and/or column shall be avoided;
    e. In the webs of box beams, de-bonded strands shall not occur in consecutive rows;
    f. In the web of PCEF bulb-tee beams, do not de-bond strands directly above one another in consecutive rows.
2. Drape strands for PCEF bulb-tee beams. When draping is required, the following criteria shall be followed:
    a. The slope of the deflected strands shall be limited to 9 degrees;
    b. The total hold-down force of all draped strands shall not exceed 75 percent of the total beam weight;
    c. When the initial hold-down force exceeds 20 kips, place the following note on the Plans:

The hold down force due to draped strands is _____ kips.

106.9.6 De-bonding Versus Draping

It is recommended that the designer use the following general guidelines to specify the use of de-bonding versus draping to control stresses:

1. Draping of strands in slab, NEXT beams and box sections shall not be allowed;
2. Bulb-tee beams should be de-bonded for beam lengths up to 120 feet; for beam lengths over 120 feet, the designer should use draped strands.
3. Draping strands is typically more effective for beams that are 87 inches or deeper; and
4. If de-bonding works with the addition of six strands or less, in comparison to draping, then design using de-bonded strands.

106.9.7 Reinforcement

Reinforcement in prestressed beams shall be epoxy-coated.

106.9.7.1 *Composite Shear Reinforcement*

Composite flexural members consist of prestressed members acting with a cast-in-place or precast-concrete deck. For the deck to act compositely, reinforcement must be provided, extending from the beam into the deck to resist the horizontal shear that develops across this plane. Composite shear reinforcement shall be provided for the full length of the prestressed beam, including the negative moment areas of continuous spans.

106.9.7.2 *Anchorage Zone Reinforcement*

When prestressing strands are released and the prestressing force is transferred to the hardened concrete, the ends of the beam experiences tensile stresses perpendicular to the direction of prestressing. Anchorage-zone reinforcement shall be provided to resist these stresses. For slabs and box beams, stirrups with multiple legs can be used to accommodate the required reinforcing within the specified distance from the end of the beam

106.9.8 Skew Effects

Skew in prestressed beam bridges affects structural behavior, member analysis, and can complicate construction. The following skew limitations, analysis requirements, and end detailing shall be used to mitigate skew effects for improved design and construction.

1. Analysis: Typically, the effect of skew on beam analysis is accounted for by including the skew correction factor. It is assumed that skew has little effect on normal spans and normal skews. For short, wide spans and for extreme skews (values over 45 degrees), the effect of the skew on structural behavior and load distribution shall be determined by structural analysis. Depending on the beam type, the following skew restrictions apply:
    a. Adjacent box beams: 40 degrees maximum skew
    b. Spread-box beams: 45 degrees maximum skew

c. I-Beams and bulb-tee beams: 60 degrees maximum skew

d. NEXT beams: 30 degrees maximum skew

2. End Detailing:

a. Box beams: To minimize labor costs and to avoid over-stressing, it is preferable that the ends of box beams be skewed. Skewed ends of box beams should match the skew of the substructure unit they rest on at either end.

b. I-Beams and bulb-tee beams: The ends are permitted to be clipped to avoid interference with another beam or backwall. The clipped flange, however, must not extend into the web.

106.9.8.1 *Grade and Cross-Slope Effects*

Set the transverse beam slope relative to the beam axis as follows:

1. I-Beams and bulb-tee beams: Set beams truly vertical in all cases.

2. Spread box beams: Set beams truly vertical or on a slope to conform to the deck cross-slope. Special consideration should be considered when setting on a slope in areas of super-elevation transition or within a vertical-curve profile with skewed supports. When setting beams vertical, properly consider effects of haunch thickness on beam design and detailing; specifically, the additional weight of concrete and the need for haunch reinforcement.

3. Adjacent box beams and NEXT beams: Set beams to conform as closely as practical to the deck cross-slope to minimize the haunch thickness and to align holes for the transverse post-tensioning tendons or rods. In areas of super-elevation transition or in a vertical-curve profile with skewed supports, additional haunch or stepped beam seats may be required.

106.9.8.2 *Horizontal Curve and Flare Effect*

Horizontal curves and tapered roadways each tend to complicate the design of straight beams. Variable overhang dimensions must be investigated for feasibility for structures supporting horizontally curved and tapered roadways. The designer must determine what girder spacing to use for dead- and live-load design, and whether or not a refined analysis that considers actual load application is warranted. The use of parallel beam framing is preferred to splayed framing, when practical. For splayed or variable-width beam spacing, the design girder spacing shall be the two-thirds value between the maximum and minimum spacing values, for the purpose of strength design checks using line girder analysis methodology. Similarly, for variable overhangs, the design overhang shall be the two-thirds value between the maximum and minimum overhang values, for the purpose strength design checks for the exterior beam using line-girder analysis methodology.

106.9.9 Camber

Prestressed beams shall be designed so that the algebraic sum of the beam camber at prestress transfer due to prestress force, the beam dead-load deflections due to non-composite dead load, and superimposed dead-load deflections due to applied superimposed

dead loads results in a positive (upward) camber. Camber may increase or decrease with time, depending on the stress distribution across the member under sustained loads. Refer to *Section 205.7.3.6 – Deformations* for methods of calculating camber and deflections.

The Plans shall show the camber at prestress transfer and the deflections due to non-composite dead load and superimposed dead load.

106.9.9.1 *Consideration for Staged Construction Camber*

For a given project, fabricators typically cast all of the beams of a given size at the same time to minimize the time required to set up the casting beds. If these beams are subsequently erected at the same time, differential camber between the beams is rarely significant.

On staged construction projects, the precast beams may be fabricated at relatively the same time, and erected months, even years, apart. The haunch provided for spread box beams and PCEF bulb-tees is typically sufficient to accommodate this differential camber growth, and need not be considered. However, for adjacent precast superstructures, the differential camber is significant since they are typically detailed to adjoin and align vertically, and therefore, time dependent camber effects may need to be incorporated in the design.

If camber growth is anticipated between stages, specific measures to control camber growth shall be specified in the contract documents.

106.9.9.2 *Simple Spans Made Continuous*

Unless significant differential settlement between supports is anticipated, all multi-span prestressed concrete superstructures shall be made continuous for live load. A minimum girder age of at least 90 days is required when continuity is established. Establishing continuity prior to 90 days requires prior approval from the Bridge Engineer. Minimum age of girder at establishment of continuity shall be shown on the Contract Documents.

DelDOT's practice is to establish the continuity connection at the same time as the placement of the deck concrete. Therefore, dead load due to the deck concrete will be resisted by the prestressed beams as simply supported. All loads applied after the deck concrete cures will be resisted by the continuous composite structure.

106.10 Bearings

Bridge bearings for steel or concrete beams/girders are divided into three categories: elastomeric, HLMR, and mechanical. These bearing categories are sufficient to cover the vast majority of structures. It is the responsibility of the designer to determine which bearing type is best suited to cost effectively accommodate the requirements of the design.

106.10.1 Elastomeric Bearings

Elastomeric bearings have a low initial cost when compared to other bearing types, and require virtually no long-term maintenance. Elastomeric bearings come in three predominant types: plain, steel reinforced, and cotton duck. Elastomeric pads shall be steel-reinforced for bridges in Delaware.

106.10.1.1 *Steel-Reinforced Elastomeric Bearings*

Steel-reinforced elastomeric bearings rely on friction between the contact surfaces, as well as the restraint of the bonded steel shims to resist elastomer bulging. The thin, uniformly spaced elastomer layers allow for higher compressive stresses and higher translation and rotation capacity than plain elastomeric bearing pads (PEPs).

By using multiple layers of elastomer, steel-reinforced elastomeric bearings can handle larger rotations and translations than other types of elastomeric bearings, but the designer needs to ensure stability requirements are satisfied. If horizontal shear force is greater than one-fifth of the minimum permanent dead load, the bearing is subject to slip and shall be secured against horizontal movement per methods described in *Section 106.10.9 – Anchorage to Structure*. The one-fifth limit is directly related to the design coefficient of friction that can be assumed between elastomer and clean concrete and unpolished, debris-free steel.

106.10.2 High-Load Multi-Rotational Bearings

HLMR bearings are frequently used on modern steel bridges where the number of girders is minimized and the span lengths are maximized. Pot, disc and spherical bearings currently make-up the readily available variety of HLMR bearings that support high loads and that are able to rotate in any direction. They can be fixed or, when fabricated with sliding surfaces, can accommodate translation for use as expansion bearings. In addition, guide bars can be used to restrict movement to one direction.

106.10.2.1 *Pot Bearings*

Pot bearings subject a confined elastomeric element (disc) to high pressures, effectively causing the disc to behave as a fluid. The neoprene or natural rubber elastomeric disc is confined within a machined pot plate. The vertical force is transmitted to the elastomeric disc via the piston, which sits within the pot. Tight fitting brass sealing rings prevent the elastomer from escaping in the gap between the piston and the pot. Horizontal forces are resisted by contact of the piston face against the pot wall. The vertical and horizontal loads are transmitted from the piston and pot to the sole and masonry plates through bearing and by mechanical connections.

106.10.2.2 *Disc Bearings*

Disc bearings subject an unconfined elastomeric disc to high pressures. The polyether urethane disc is stiff against compression and rotation, but is free to bulge. Horizontal forces are transmitted from an upper load plate either to a shear pin at the center of the disc or to a restricting ring. The latter is similar in detail to the pot bearing, except that the disc is unconfined with no requirement for sealing rings. If a restricting ring configuration is used, a positive locator device is supplied. The shear pin serves this purpose when it is used to resist the horizontal loads.

106.10.2.3 *Spherical Bearings*

Spherical bearings transmit all loads, both vertical and horizontal, through the spherical coupling of a convex and concave plate. This interface is typically a mating of low coefficient of friction PTFE and stainless steel. All vertical loads are assumed to be transmitted radially

through the interface and all horizontal loads are resisted by the spherical geometry of the plates.

106.10.2.4 *Mechanical Bearings*

Mechanical bearings (incorporation of bronze plates) or steel bearings distribute forces, both vertical and horizontal, through metal-to-metal contact. Most fixed bearings rely upon a pin or knuckle to allow rotation while restricting translational movement. Rockers, rollers, and sliding types are common expansion types historically used and under certain circumstances can still be used today.

The metal-to-metal contact typically results in corrosion and can eventually lead to "freezing" of the bearing components. Lubricants have been used to mitigate corrosion, but trap debris, which in turn holds moisture and promotes corrosion. Mechanical bearings should not be specified for new designs unless special circumstances exist. For example, this bearing type might be used in a bridge widening where existing bearing styles must be matched.

106.10.3 Guidelines for Bearing Selection

Each bearing type has practical limitations that make it more or less suitable for a particular design. In this section, requirements and appropriateness of bearing types are discussed with respect to design and fabrication.

106.10.3.1 *Bearing Type Preferences*

Selection of bearing type should be done considering the following guidelines:

1. Rectangular steel reinforced elastomeric pads shall be used for straight bridges with skews less than or equal to 20 degrees, when structurally feasible.
2. For skews greater than 20 degrees and horizontally curved girders, use circular elastomeric pads or HLMR bearing types.
3. When compressive capacity cannot be accommodated by steel reinforced elastomeric pads, select the most cost-effective HLMR bearing type, with a general preference for pot bearings.
4. When movement capabilities and/or stability checks cannot be achieved with steel reinforced elastomeric pads, the use of PTFE/stainless steel sliding surface details in conjunction with the steel reinforced elastomeric pad shall be considered. If these details cannot be achieved, use the most cost-effective HLMR bearing type.

It is prohibited to mix bearing types along a given substructure bearing line, and it is not preferable to mix bearing types on new bridges.

Refer to *Section 345.01 – Elastomeric Bearing Details* and *Section 345.02 – Pot Bearings* for typical bearing details to be used in Delaware when feasible.

106.10.3.2 *Feasibility due to Fabrication, Installation and Testing Limitations*

Perhaps the single most limiting factor to contribute to a bearing type selection is the feasibility of the bearing to be fabricated and tested.

Steel reinforced elastomeric bearings are molded in the presence of high heat and pressure. AASHTO requires load testing to 150 percent of the maximum design stress. Designs that approach the recommended maximum compressive forces and translations limits should be verified with fabricators at an early stage in design.

The designer shall include a temperature-setting table on the Plans for HLMR expansion bearings. The table should indicate the position of the top plates of the bearing relative to the base plates for different installation temperatures.

106.10.4 Loads, Rotation and Translation

Horizontal loads to the bearing resulting from translation restraint or Extreme Event I (seismic) come from the analysis of the structure. Bridges in Delaware shall meet the requirements of Seismic Zone 1, per A3.10.9.2 – Seismic Zone 1. As such, the horizontal design connection force in the restrained direction(s) shall meet the requirements of A3.10.9.2 – Seismic Zone 1.

Whether or not the bearing is intended to resist movement, the bearing, connections and substructure units should be designed to transfer the forces imparted by the bearing's resistance to movement. Elastomeric bearings resist movement by shear stiffness. Additionally, the frictional forces of steel bearings and bearings utilizing PTFE/stainless steel sliding surfaces should be considered. The design coefficients of friction should be examined at all compressive load levels and the expected low temperature.

106.10.5 Design Requirements

This section discusses recommendations and considerations for design.

106.10.5.1 *Elastomeric Bearings*

Steel reinforced elastomeric bearings are to be designed using "Method B." Based on stability and economics, a limitation of 4 inches of translation is generally practical without the addition of a sliding surface, and rotation is generally limited to 0.02 radians.

Steel reinforced elastomeric bearings are designed for conditions in which the direction of movement and live load rotation is along the same axis and therefore, rectangular shapes are suitable. For horizontally curved and highly skewed structures, these directions may not coincide, or their directions may not be easily defined. In these situations, circular bearings may be considered since they can easily accommodate translation and rotation in any direction.

Shear modulus (G) is a critical material property in the design and performance of elastomeric bearings. The designer shall verify the bearing meets design requirements for the full range of values for G as shown in AASHTO for the prescribed durometer. Fabricators have compounds for different durometer hardness, which in turn have average shear moduli. Although it is possible to specify the elastomer by a shear modulus, check with fabricators to obtain their shear modulus limits. If the elastomer is specified by its shear modulus, AASHTO allows the fabricator to provide a measured shear modulus within fifteen percent of the value specified. Instead, elastomers are typically specified by durometer hardness only. No reference to a required shear modulus should be stated if specifying durometer hardness, and vice versa.

Elastomeric bearings cannot be set with an initial offset to account for varying temperatures at the time of installation. For bearings that must be reset, the contract documents should include provisions for directing the contractor to jack the girders and allowing the bearings to return to their un-deformed shape. If the elastomeric bearing includes a sliding surface, the designer should indicate, in the Plans, the initial offset from centerline to use during erection/installation depending on temperature.

For the initial design attempt, it is recommended that the elastomeric bearings be designed for one-way translation equal to the movement expected through the entire high-low temperature range. This is a conservative approach, but is a practical means for allowing bearings to be set at any temperature without requiring the bearings to be reset at a given mid-range temperature. If a reduced temperature range is required for the design, the designer shall specify on the Plans the maximum temperature ranged permitted at initial set, or require that the bearings be re-set within the permissible temperature range as part of the construction contract.

If under full dead load and at the mean annual temperature, the underside of the girder is out of level by more than 0.01 radians (1 percent), beveled sole plates shall be provided to produce a level-bearing surface at the top of the elastomeric bearing. This implies that beveled sole plates are not required if the out-of-plane rotation is less than 1 percent. If the designer chooses to not use beveled sole plates at slopes less than or equal to 1 percent, then the additional permanent rotation induced by the out-of-plane condition must be added into the required design rotation sum, including the 0.005 radian allowance for uncertainties.

106.10.5.2 *High-load Multi-Rotational Bearings*

For horizontally restrained spherical bearings with PTFE, the ratio of the maximum horizontal force to the minimum vertical force should not exceed 0.40 to avoid overstressing the PTFE fabric at the spherical interface. If this criterion cannot be met, alternate means to transfer the horizontal forces should be employed.

106.10.5.3 *Design Limitations*

HLMR bearings designed for expansion with a PTFE/stainless steel sliding surface can nearly accommodate horizontal movements in any range. However, due to the stiffness of the elastomeric element, disc bearings should be limited to a rotation of 0.03 radians. Pot bearings can safely be designed for rotations in the range of 0.04 to 0.05 radians, and spherical bearings can be designed for rotations in excess of 0.05 radians. If the minimum vertical load is less than twenty percent of the vertical design capacity of the bearing, HLMR bearings should not be used, in accordance with AASHTO.

106.10.6 Consecutively Fixed Piers

When it is advantageous to the overall design, consecutively fixed piers should be utilized. It is generally advantageous for tall, slender piers. An analysis should be performed, taking into account the stiffness of the piers, thermal movements and distribution of horizontal forces. The determination of the number of piers to be consecutively fixed must be based on cost-effectiveness.

When consecutively fixed piers are used in a design, instructions for jacking the required deflection into the piers for proper positioning of the bearings under the beams shall be

shown on the drawings only if required by pier design. If required, a table of dimensions shall be included showing the relative distance that each pier must be moved for each five degrees in temperature variation from the mid-range of the anticipated temperature extremes.

The theoretical fixed point on the bridge, based on the overall stiffness of the structural system, incorporating the relative stiffness and heights of the piers that are fixed, shall also be shown on the Plans.

106.10.7 Accommodations for Future Bearing Replacement

All bearings should be considered replaceable. Provisions should be made during the design stage to ensure that the superstructure and substructure elements are detailed to accommodate future jacking and removal of each bearing element. Likewise, for HLMR bearings, the entire bearing, or internal elements of the bearing assembly, should be designed for removal and replacement.

106.10.8 Bearings for Horizontally-Curved and/or Skewed Bridges

Refer to *Section 106.10.3.1 – Bearing Type Preferences* for selection of bearing types for horizontally curved and/or significantly (>20 degrees) skewed concrete and steel superstructures. Refer to *Section 106.8.8.3 – Bearings for Horizontally Curved and/or Skewed Steel Superstructures* for guidance on the layout of bearings for horizontally-curved and/or skewed (>20 degrees) steel superstructures.

106.10.9 Anchorage to Structure

106.10.9.1 *Sole Plates*

Sole plates (a plate, typically welded, attached to the bottom flange of a beam that distributes the reaction of the bearing to the beam) are not always required with the design of elastomeric bearings. When they are, beveled sole plates should be used to produce a level bearing surface at the top of the elastomeric bearing when the underside of the girder, under the full dead load and at the mean annual temperature, is out of level by more than 0.01 radians (1 percent). In addition, if the required difference in the sole plate thickness due to the bevel exceeds 0.125 inch, the sole plate should be beveled. Fabricators have the resources to machine nearly any bevel required. If the difference in plate thickness due to the bevel is as little as 0.125 inch, it may be difficult for the Contractor to differentiate the proper orientation of the plate. For these cases, the fabricator shall be required to mark the plate in some way to delineate the thick and thin ends. The designer shall include the bevel information in the contract documents.

Beveled sole-plate thickness should not be less than 0.75 inch, and should be designed for bending if the width of the elastomeric bearing extends beyond the edges of the girder flange.

The sole plate should extend transversely beyond the edge of the bottom flange of the girder a minimum of 1 inch on each side.

Similar to the connection between the elastomeric pad and the masonry plate, refer to *Section 106.10.9.2 – Masonry Plates and Anchor Rods* for options to secure the connection between the sole plate and the elastomeric pad, when determined to be required for securing

against “walking.” “Walking” refers to slippage or sliding between the bottom or top surface of the elastomeric pad and the concrete or steel surface against which it is bearing.

For welded connections between the girder and sole plate, weld current shall not be permitted to pass between the sole plate and masonry plate to prevent fusion of metal-to-metal contact surfaces. Overhead welds should be avoided due to limited clearance. The bearing should be detailed with at least 1.5 inches between the elastomer and any field welds. The welds for the sole plate connection should only be along the longitudinal girder axis. Transverse joints should be sealed with an acceptable caulking material.

106.10.9.2 *Masonry Plates and Anchor Rods*

If the horizontal bearing forces exceed one-fifth the minimum vertical load due to permanent loads, the bearing shall be secured against “walking.” “Walking” refers to slippage or sliding between the bottom or top surface of the elastomeric pad and the concrete or steel surface to which it is bearing against. The designer has three options, listed in order of preference, for securing the bearing against the potential for walking: 1) Vulcanization; 2) use of pintles; and 3.) use of keeper bars. Specifying that the elastomeric bearing be shop–vulcanize-bonded to a masonry plate, which in turn is then anchored to the substructure, will prevent the bearing from walking. In addition to vulcanizing, a pintle can be welded to the masonry or sole plate, which would then be inserted into a hole in the bearing pad to secure it. The effect of the hole must be accounted for in the design of the bearing.

Permanently securing the pads against walking by the use of adhesive is not permitted.

For new construction, anchor rods should generally be detailed for placement in preformed holes using 6-inch-diameter sleeves or block-outs, which are to be grouted with non-shrink grout after installation of the bearings. This detailing allows for adjustment in the placement of the bearings relative to the anchor rods. The designer may consider using reduced-size block-outs to accommodate project-specific pier or abutment top main reinforcement detailing, but the block-outs must be no less than three times the diameter of the anchor rod.

Anchor rods for HLMR bearings should generally be placed beyond the limits of the sole plate to facilitate installation and avoid interference with bearing components during movement and rotation. For HLMR bearings whose components are welded (as opposed to tightly fit within a machined recess) to the sole and masonry plates to allow for future bearing removal, the use of a headed anchor bolt, coupler and anchor rod is suggested; refer to *Section 345.02 – Pot Bearing Details*. If the anchor assemblies are under the sole plate or other bearing component plates, clearance to install and remove the bolt must be considered. If a headed anchor bolt expects tension, the designer must verify the entire anchor assembly and substructure are also designed for this tension.

106.10.10 Lateral Restraint

For expansion elastomeric bearings, if a restraint system is external to the bearing and stainless steel is required on the guiding system, there shall be a corresponding low coefficient of friction material for it to mate. The stainless steel shall completely cover the material in all movement extremes, and consideration must be given to vertical displacement due to construction and application of the dead loads.

Longitudinally guided expansion bearings on structures with a horizontally curved alignment and structures with non-parallel girders should be guided in the same direction with respect to the centerline of the substructure where the line of bearings is installed. Guiding at differing directions along a bearing line will cause the bearings to bind. It is generally accepted for design purposes that the direction of movement for structures on a horizontally curved alignment is along the chord from the fixed point to the expansion point. In rare occasion, the structure can be forced to move in any direction the designer chooses; however, the resulting forces must be accounted for in the design of the bearing and substructure.

106.10.11 Uplift Restraint

Uplift due to service loads should be avoided with strategic placement of additional dead load. Uplift forces due to construction loads should be offset either by revising the deck pour sequence, or restrained by means other than the bearing.

If uplift at bearings is unavoidable from a practical standpoint, the uplift restraint system for elastomeric bearings should be external to the bearing. Relatively low uplift forces due to construction loads or seismic events can be economically and feasibly built into an HLMR bearing. For HLMR bearings, methods similar to those used with elastomeric bearings can be applied, or the bearing can be designed with hold-down attachments.

106.10.12 Bearing Schedule

Contract documents shall contain a plan indicating the following information, as applicable:

1. Provide a schedule of all minimum and maximum vertical and horizontal loads for LRFD Load Combinations as shown in . The schedule shall include all longitudinal and transverse forces, as well as seismic forces. The schedule is not required for elastomeric bearings. Show the location and type of each bearing (fixed, expansion, or guided expansion). Use a bearing framing plan to show this data. Show magnitude and direction of movements at all bearings.

2. Indicate minimum design rotation requirements of the bearing, including construction tolerances.

3. Indicate and properly detail all anchorage details and/or requirements for constructability of initial installation and future replacement, and for permanent design requirements.

4. Provide details and indicate grades, bevels, and slopes for each bearing type.

5. Indicate the coefficient of friction used in design of the sliding surfaces.

6. Highlight any special details needed for seismic requirements, such as uplift details, temporary attachments, or other requirements.

7. Show beam seat elevations based on an assumed total bearing thickness stated in the Plans.

TABLE 106-1. SUGGESTED FORMAT FOR PROVIDING BEARING SCHEDULE LOADS								
Load Combination	Factored Loads (kips)							
	Vertical				Horizontal			
	DL		LL + I		Transverse		Longitudinal	
	Min	Max	Min	Max	Min	Max	Min	Max

A completed table similar to Table 106-1 shall be provided on the Plans for all bearing types, except for elastomeric bearings. Engineering judgment can be used to eliminate groups that obviously will not control the bearing design to limit the table size.

106.11 References

AASHTO, 1990. *A Guide for Protective Screening of Overpass Structures*, 2nd Edition.

AASHTO, 1995. *Guide Design Specifications for Bridge Temporary Works*, 1st Edition, 1995 with 2008 Interim Revisions.

AASHTO, 2014. *AASHTO LRFD Bridge Design Specifications*, 7th Edition.

AREMA, 2015. *Manual for Railway Engineering*.

AWS, 2007. AWS A2.4, *Standard Symbols for Welding, Brazing, and Nondestructive Examination*.

DelDOT, n.d. *Standard Construction Details*.

DelDOT, 2015. *Standard Specifications for Road and Bridge Construction*, December.

FHWA, 1989. FHWA Technical Advisory 5140.22, *Uncoated Weathering Steel in Structures*, October 3.

FHWA, 2012. FHWA Memorandum, *Clarification of Requirements for Fracture Critical Members*, June 20.

FHWA, 2012. *Steel Bridge Design Handbook: Redundancy*, Publication No. FHWA-IF-12-052, Volume 9, November.

NCHRP, 2012, NCHRP Report 725, *Guidelines for Analysis Methods and Construction Engineering of Curved and Skewed Steel Girder Bridges*, Transportation Research Board of the National Academies.

NCHRP, 1998. NCHRP Report 406, *Redundancy in Highway Bridge Superstructures*, Transportation Research Board, National Research Council.

NEPCOAT, 2015. *Qualified Products List for Protective Coatings for NEW and 100% BARE EXISTING Steel for Bridges*, October 6.

PCI, 2011. *Bridge Design Manual*, 3rd Edition, November.

Pennsylvania Department of Transportation, 2015. *Design Manual Part 4, Structures Procedures – Design – Plans Presentation,* Pdt – Pub No. 15M, April 2015 Edition.

Roddis, K., Kulseth, P., and Liu, Z., 2005. *Torsional Analysis for Exterior Girders – TAEG 2.1, University of Kansas, K-Tran KU-00-3.*

Texas Department of Transportation, 2015. *Preferred Practices for Steel Bridge Design, Fabrication, and Erection*, February.

This page intentionally left blank.

Section 107
Final Design Considerations – Substructure

107.1 Introduction

The purpose of this section is to establish policies and procedures for identifying DelDOT preferences for the final design, and detailing for foundations and substructures of typical Delaware bridges and other structures.

107.2 Terms

AASHTO LRFD – The *AASHTO LRFD Bridge Design Specifications*, 7th Edition, 2014, shall govern the design considerations discussed in this section.

FHWA GEC-8 – Reference to FHWA GEC-8 in this section shall be considered a reference to FHWA-HIF-07-03 Geotechnical Engineering Circular No. 8 – *Design and Construction of Continuous Flight Auger Piles* (2007).

FHWA MDCRF – Reference to FHWA MDCRF in this section shall be considered a reference to FHWA NHI-05-039 – *Micropile Design and Construction Reference Manual* (2005).

FHWA DCDPF – Reference to FHWA DCDPF in this section shall be considered a reference to FHWA NHI-05-042 – *Design and Construction of Driven Pile Foundations* (1997).

FHWA DSDM – Reference to FHWA DSDM in this section shall be considered a reference to FHWA-NHI-10-016 – *Drilled Shafts: Construction Procedures and LRFD Design Methods Foundation Design* (2010).

107.3 Foundation Design

A substructure is the interfacing element between the superstructure and the underlying soil or rock. The loads transmitted from the superstructure to the underlying strata must not cause a bearing failure or damaging settlement (vertical and horizontal movement).

It is essential to systematically consider various foundation types, and to select the optimum alternative based on the site-specific conditions. , provides general guidelines for the selection of foundation types.

TABLE 107-1. FOUNDATION TYPES AND APPLICABLE SOIL CONDITIONS	
FOUNDATION TYPE	APPLICABLE SOIL CONDITIONS
Spread footing or wall footing	Any conditions where bearing capacity is adequate for applied load. May use on single stratum, firm layer over soft layer, soft layer over firm layer, or shallow top-of-rock. Check immediate, differential, and consolidation settlements.
Pile foundation (friction, end–bearing, or combination)	Poor surface and near-surface soils when undercutting and replacing with subfoundation are undesirable. Soils of high bearing capacity, 10 to approximately 150 feet below the ground surface. Friction piles distribute load along pile shaft if the soil strength is adequate. End-bearing piles transfer load by point bearing on dense soil or rock of high bearing capacity. Check settlement of pile groups. Check settlement of surrounding soils (potential for downdrag).
Caisson (drilled shaft) – generally end-bearing or combination of end-bearing and skin resistance.	Poor surface and near-surface soils. Soil of high bearing capacity (end-bearing) is 10 to approximately 150 feet below ground surface. Auger-cast piles and ground improvement techniques (rigid inclusions, rammed aggregate piers, deep-soil mixing) should be considered, if high-bearing-capacity soils are deeper than approximately 150 feet, and the overlying soils above cannot provide enough frictional resistance for friction piles or caissons foundations.

In general, where the depth from the bottom of footing to rock is minimal (less than 10 feet), the designer should specify excavation to rock rather than placing short driven piles, because short piles are generally undesirable due to low pullout and lateral resistance. There are five approaches that can be implemented to prevent the use of short piles:

1. Specify sub-foundation backfill from the rock surface to the bottom of footing.
2. Use sub-foundation concrete instead of backfill where the depth to bedrock is shallow (less than 5 feet). Dimensions of the sub-foundation concrete should be shown on the plans.
3. Construct a taller abutment, pier, or retaining wall.
4. Lower the bottom of the footing by creating a thicker footing.
5. Predrill to obtain the required 10-foot-minimum pile length at locations where this minimum length will not be met.

Long-term settlement must be considered during the selection of a foundation type. The designer must be aware of soils that are prone to settlement.

107.3.1 Settlement Considerations

In general, granular materials and stiff, fine-grained soils exhibit elastic settlement. Elastic settlement occurs rapidly during construction, or shortly after. Fine-grained soils with a soft to medium-stiff consistency usually exhibit long-term consolidation settlement. See Section A10 – Foundations and *Section 210 – Foundations* for approved methods to be used in settlement calculations.

If total long-term settlement is expected to exceed 1 inch, spread footings should not be used unless settlement mitigation measures are taken, such as preloading.

Differential settlement should also be evaluated regarding angular distortion, defined as δ'/L between adjacent support units (i.e., between piers, or piers and abutments) where δ' is differential settlement and L represents span length between adjacent units, as indicated in AC10.5.2.2.

Batter piles should not be used if ground settlement is expected to be greater than 0.25 inch, unless the effect of pile bending is evaluated in design.

107.3.2 Spread Footing Foundations

Spread footings can be founded on competent soil or bedrock. The minimum thickness of spread footings shall be 1 foot as required to meet all reinforcement clearance requirements; and footing thickness shall be increased from the minimum in 3-inch increments. The minimum footing width (plan dimension) shall be 3 feet to prevent localized punching failures.

Provide shrinkage and temperature reinforcement on the near face for spread footings exceeding 3 feet in thickness, in accordance with A5.10.8.

The top of spread footings shall be a minimum of 1 foot below the finished ground line. Footings adjacent to waterways, such as drainage swales and tax ditches, should be below the dredge line and beyond the limits of the waterway.

To prevent frost heave, the bottom of footing shall be placed a minimum of 3 feet below the finished ground line, which is the frost depth in Delaware. The distance shall be measured perpendicular to the finished ground line.

At a minimum, spread footings shall be placed on a 1-foot-minimum bed of coarse aggregate. Where unsuitable material is identified at the bottom of footing elevation, remove unsuitable material and replace with competent sub-foundation backfill material (such as DelDOT No. 57 aggregate). Other alternates such as ground improvement techniques can be used to control settlement and improve bearing capacity. The end result of these methods is an improved soil mass exhibiting higher bearing resistance and less compressibility potential. After the ground has been improved, spread footings can be constructed using the standard means and methods. There are no rigid connections between the ground improvement elements and the footing (contrary to a pile cap foundation).

Where a spread footing is founded on a sloping rock stratum, the designer must specify excavation into the rock to establish a level bearing surface. The rock excavation into the rock can be the full width of the footing or can be benched, depending on the site-specific conditions. Keying foundations into rock is not necessary unless otherwise required by calculation.

Footings that are exposed to the action of stream currents shall be placed at an elevation necessary to prevent undermining from scour, as discussed in *Section 107.3.5.2 – Scour*.

107.3.3 Deep Foundations

Deep foundations are used when it is necessary to carry the structure load through a zone of weak or compressible material to a firmer foundation material at a deeper level. Deep foundations are also used to found a structure below the depth of potential scour.

107.3.4 Pile Foundations

End-bearing piles develop their load capacity through their tip by bearing on hard material. Friction piles develop their load capacity by skin friction between the pile and soil over their length. Piles are frequently needed because of the relative inability of shallow footings to resist inclined, horizontal, or uplift forces and overturning moments, or to reduce settlement.

Minimum thickness of the pile cap shall be 3 feet, and the thickness shall be increased from the minimum in 3-inch increments. Provide 3-inch cover from the bottom mat reinforcement to the bottom of footing. Detail bottom-mat reinforcement to avoid pile interference as required.

The top-of-pile supported footings shall be a minimum of 1 foot below the finished ground line. Footings adjacent to waterways, such as drainage swales and tax ditches, should be below the dredge line and beyond the limits of the waterway.

Piles come in various sizes and material types. The types of piles commonly used in Delaware are:

1. Precast-prestressed concrete piles
2. Steel-pipe piles
3. Steel-shell piles (cast-in-place piles)
4. Steel H-piles
5. Timber piles

Piles should not be used where the depth to bedrock is less than 10 feet from the bottom of the pile cap. It is difficult to develop adequate lateral stability and pullout resistance. Predrilling into rock and grouting can be used to provide the necessary strength and stability.

Each pile type is described in detail in the following sections.

107.3.4.1 *Precast-Prestressed Concrete Piles*

Precast-prestressed concrete piles are the preferred choice for use as pile bents over water. The minimum preferred size is 14 inches for abutments, pier, and retaining-wall footings and 18 inches for pile bents.

Precast concrete piles are usually of constant cross section. Concrete piles are considered noncorrosive, but can be damaged by direct chemical attack (e.g., from organic soil, industrial wastes, organic fills), electrolytic action (chemical or stray direct currents), or oxidation. Concrete can be protected from chemical attack by use of special cements or coatings.

Prestressed concrete piles are generally suitable for use as friction piles when driven in sand, gravel, or clays; they are also suitable for driving in soils containing boulders, when designed appropriately. A rock shoe attached to the pile tip allows penetration through obstructions. Prestressed piles are capable of high capacities when used as end-bearing piles.

The primary advantage of prestressed concrete piles is durability. The continuous compression created by the prestressing ensures that hairline cracks are kept tightly closed. Another advantage of prestressing (compression) is that the tensile stresses that can develop in the concrete under certain driving conditions are less critical. The fabricator is to check piles for handling and transportation stresses.

Prestressed piles are usually cast full length in permanent casting beds. Maximum pile lengths used in Delaware shall be 80 feet. Pile lengths over 80 feet are allowed with approval from the Bridge Design Engineer; however, the Designer is to verify that handling and transportation stresses are not exceeded.

Typical details for prestressed concrete piles with conventional spiral reinforcement are included in *Section 305.01 – Prestressed-Precast Concrete Pile Details*.

Dowel bars are used for development into the pile cap. The Contractor is to provide a placement procedure and needs to ensure the dowel holes are free of water at all times.

107.3.4.2 *Steel Pipe Piles*

Steel-pipe piles usually consist of seamless, welded, or spiral-welded steel pipes. The pipe sizes typically used in Delaware are 12-inch and 18-inch diameters. The designer must specify the grade (50 kips per square inch is preferred) and thickness (3/16-inch minimum [7 gage]) of the steel pipe.

Pipe piles are typically driven with closed ends and filled with concrete. A closed-ended pile is generally formed by welding a flat plate of 0.5- to 0.75-inch thickness or a conical point to the end of the pile. When pipe piles are driven to weathered rock or through boulders, a cruciform end plate or a conical point with rounded nose is often used to prevent distortion of the pile.

Pipe piles with open ends are allowed on a case-by-case basis if required.

Pipe piles are spliced by using full-penetration butt welds. Note that welding of pipes is not covered by AWS D1.5. The designer should consider the need to specify testing type and frequency, depending on the expected pile sizes and lengths. The effects of corrosion due to soils and stray currents must be considered in the design of steel-pipe piles. Refer to *Section 107.3.5.4 – Corrosion and Deterioration* for further discussion on this topic.

107.3.4.3 *Steel Shell and Cast-in-Place Piles*

Cased, fluted-steel shell piles filled with concrete are the most widely used type of cast-in-place concrete piles. Spiral steel shells are not an equivalent alternate for fluted piles. If Spiral steel shells are allowed as an alternate, revised design is required.

After the shell has been driven and before concrete is placed, its full length is inspected internally. Reinforcing steel is required to provide a positive connection to the footing. Reinforcing steel may also be used to provide additional bending capacity. Shells are best suited for friction piles in granular material. Fluted steel shells are used in shell thicknesses

of ¼ inch (3-gage) to 3/16 inch (7-gage). The fluted design has two primary functional advantages: it adds the stiffness necessary for handling and driving the lightweight piles; and the additional surface area provides additional frictional resistance.

Splicing fluted steel-shell sections is readily accomplished by welding.

Typical steel-shell pile details are provided in *Section 305.02 – Cast-In-Place Pile Details*.

107.3.4.4 *Steel H-Piles*

Steel H-Piles are suitable for use as end-bearing piles, and occasionally in combination friction and end-bearing piles. Steel H-piles are also typically used for integral abutments because of their flexibility along the weak axis. They shall conform to AASHTO M183/M183M Specifications, and are commonly manufactured in standard sizes with nominal depths of 8 to 14 inches. For standard details, see *Section 305.03 – Steel H-Pile Details*.

H-piles result in small relative volume displacement during driving, which may be advantageous when driving near other structures or buildings. Because of their minimum driving displacement, H-piles can be driven more easily through dense, granular layers and stiff clays. The problems associated with soil heave during pile driving are often reduced by using H-Piles.

Due to concerns for corrosion, steel H-piles shall not be used where they will be exposed to the elements or corrosive environments. They are normally employed only where fully embedded in soil. The soil shall be tested for corrosive nature and stray currents, as discussed in *Section 107.3.5.4 – Corrosion and Deterioration*.

H-piles are commonly used for any depth because splicing is relatively easy. Splices are commonly made by full-penetration butt welds, by proprietary splice methods, or as shown in *Section 305.03 – Steel H-Pile Details*. In all cases, the splice shall be as strong as the pile.

Driving shoes are required for driving H-Piles through dense soil, soil containing boulders, or when rock socketing is required. Pile points are also used for penetration into rock surface.

Steel H-piles shall be embedded into the pile cap a minimum of 12 inches.

107.3.4.5 *Timber Piles*

Timber piles are made from Southern Yellow Pine or Douglas Fir. Minimum Pile Dimensions and Straightness requirements are contained in the Standard Specifications.

Where a timber pile is subjected to alternate wetting and drying, or is located in the dry above the water table, the service life may be relatively short due to decay and damage by insects. Even piles permanently submerged can suffer damage from fungus or parasites. Piling in a marine environment is also subject to damage from marine borers. Consequently, all timber piles specified for permanent structures must be treated. For the protection method, refer to the Standard Specifications.

Timber piles are best suited for use as friction piles in sands, silts, and clays. They are not recommended to be driven through dense gravel, boulders, or till, or for end-bearing piles on rock, because they are vulnerable to butt and tip damage in hard driving. When hard driving is anticipated, the pile tip should be provided with a metal shoe.

Driving timber piles often results in the crushing of fibers on the driving end (brooming). This can be controlled by using a driving cap with cushion material and metal strapping around the butt. Timber-pile splices are not permitted.

Maximum pile lengths used in Delaware and assumed for design shall be 60 feet. Any timber pile longer than 60 feet must be approved by the Bridge Design Engineer.

107.3.4.6 *Drilled Shaft Foundations*

A drilled shaft is formed by boring an open cylindrical hole into the soil and subsequently filling the hole with concrete. Excavation is accomplished by a mobile drilling rig equipped with a large helical auger or a cylindrical drilling bucket. A temporary casing and/or drilling fluid (bentonite slurry) may be required during the drilling process to stabilize the open excavation until the reinforcing cage and concrete are placed. Permanent casings should be designed when shafts extend above the mudline or cannot be withdrawn by the drill rig due to the development of substantial side resistance. Shaft-side frictional resistance shall not be accounted for in the design for sections where permanent casing is present.

A drilled shaft is usually employed as a deep foundation to support heavy loads or to minimize settlement. The load capacity of the drilled shaft is sized so that a single, large-diameter drilled shaft can take the place of a group of driven piles. Because of the methods of construction, it is readily applied to soil above or below the water table, or soil that is nearly impermeable, and to profiles where rock or hard soil is overlaid by a weak stratum. Often, drilled shafts are used where piles cannot be driven due to physical overhead restrictions; subsurface obstructions; or to minimize impact to other structures.

The dimensions of the drilled shaft will be determined by the soil conditions and the performance requirements. The flexibility of this type of foundation is such that axial and lateral loads can be resisted in a variety of soils. If lateral forces must be resisted, modifications to the structural strength/stiffness must be made to accommodate the anticipated bending.

The four categories of drilled shaft foundations are defined by their diverse methods of load transfer. Generally, the load-carrying capacity is obtained from load transfer to the soil from the shaft or the base, or a combination of both, as described below:

1. Straight shaft, end-bearing drilled shaft. Load is transferred by base resistance only.
2. Straight shaft, side-wall-shear drilled shaft. Load is transferred by side resistance only.
3. Straight shaft, side-wall-shear and end-bearing drilled shaft. Load is transferred by a combination of shaft and base resistance.
4. Straight shaft in rock. Shaft resistance in soil may be considered under some circumstances with the approval of the Bridge Design Engineer, but resistance is predominately through rock sockets.

Typical drilled shaft details are provided in *Section 305.04 – Drilled Shaft Details*.

Additional information on the consideration and design of drilled shafts can be found in the FHWA DSDM.

107.3.4.7 *Micropiles, Auger-cast Piles, and New Pile Technologies*

Micropiles, auger-cast piles, and other pile technologies that avoid pile driving are also available. In general, these drilled-in technologies are more expensive than regular driven piles, but less expensive than traditional drilled shafts. Some advantages that could make them cost-effective are:

1. Noise and vibration are minimized compared to pile driving;
2. The technology can be installed under limited overhead clearance (low headroom conditions);
3. Cutoffs and splices are eliminated, faster installation time;
4. Can be installed through obstructions (e.g., boulders, cobbles);
5. Eliminates the need for a grouting plan in karst conditions (voids within bedrock); and
6. Ideal for retrofitting existing structures with minimum disturbance.

Besides potential increase in cost, there are a few disadvantages to these systems compared to regular piles, such as less lateral capacity; the need for strict attention to quality control; and structural integrity. Proof and verification tests are required.

A micropile is a small-diameter drilled and grouted non-displacement pile. Diameter usually ranges between 6 and 12 inches. The micropile consists of two portions: the cased upper part, and the uncased bottom segment. The upper part has steel casing that prevents the hole from collapsing while the micropile is advanced. On the lower, uncased portion, grout is in direct contact with the soil/rock, providing the bond that transmits the loads to the soil/rock. The grout may be either tremied or pressurized. A steel reinforcement bar is usually used on the uncased section. It is commonly assumed that micropiles work only on side-bond resistance (end-bearing is ignored). The axial capacities of micropiles are comparable in magnitude to regular piles. They can be battered to resist lateral loads, or vertical, similar to conventional piles, using small mobile drilling equipment.

Auger-cast piles are deep-foundation elements that can be classified as intermediate products between driven piles and drilled shafts. The main difference when compared to drilled shafts is that no slurry or casing is required to maintain the hole opening. The horizontal confining stress around the pile is greater compared to auger-drilled shafts, providing higher side-frictional resistance (less than driven piles). Typical auger-cast pile diameters range between 12 and 36 inches, with pile lengths up to 100 feet. They are drilled to the final depth at or above top-of-rock in one continuous process, using a continuous-flight auger. When the auger is withdrawn, concrete or a sand/cement grout is pumped in. Reinforcement is placed into the hole after withdrawal of the auger.

See Section A10 – Foundations, *Section 210 – Foundations*, and FHWA MDCRF for design of Micropiles. For the design of auger-cast piles, refer to FHWA GEC-8. These and other new technologies may be used only with prior approval by the Bridge Design Engineer.

107.3.4.8 *Selection of Deep Foundation Type*

Selection of pile type should be based on many factors, such as:

1. Subsurface conditions: soil type and density/consistency, pile obstructions, depth to rock;

2. Project location: urban setting, vibration damage to adjacent structures; limited overhead clearance (low-headroom conditions); construction access space; waterborne operations permitting the use of longer pile sections;

3. Hydrological setting or environment: potential for scour, potentially corrosive environment, artesian conditions; and

4. Topography.

Although one pile type may emerge as the only logical choice for a given set of conditions; more often, several different types may meet all the requirements for a particular structure. In such cases, the final choice should be based on an analysis that assesses the costs of the alternatives, considering uncertainties in execution, local contractor experience, time delays, cost of load testing programs, as well as differences in the cost of pile caps and other elements of the structure. The cost analysis should be based on recent bid prices. Alternate foundation designs should be included in the contract documents, if there is a potential for substantial savings.

Table 107-2 to Table 107-7 provide advantages and disadvantages for different pile types. Table 107-8 and Table 107-9 provide general guidelines for selecting a pile type, depending on soil conditions.

TABLE 107-2. DESIGN CRITERIA FOR PILES – PRECAST-PRESTRESSED CONCRETE	
Considerations	**Criteria**
Typical Length	30 to 80 feet
Disadvantages	• Relatively high breakage rate, especially when piles are to be spliced • Considerable displacement • Difficult to splice • Large construction access space requirements
Advantages	• High load capacities • Corrosion resistance can be attained • Hard driving possible
Remarks	Cylinder piles in particular are suited for bending resistance
Typical Illustration	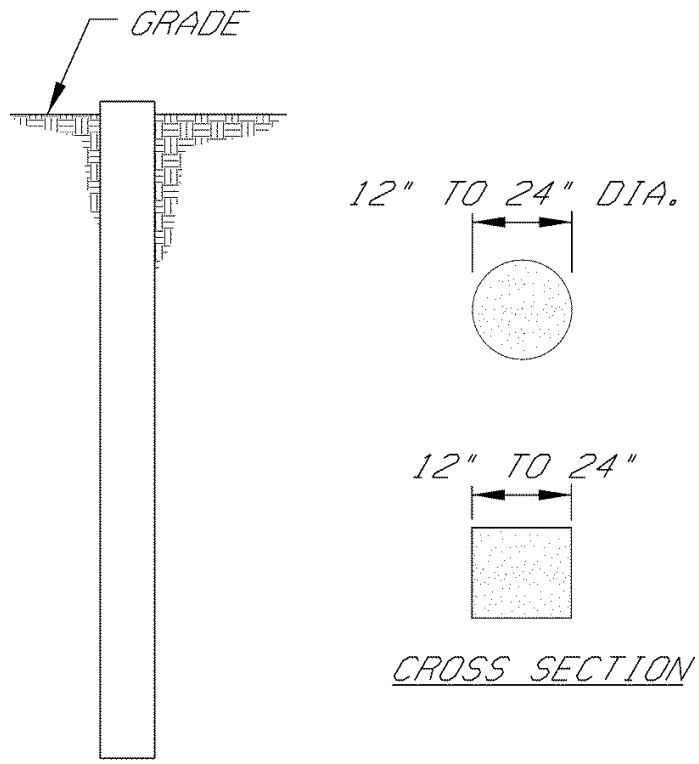

TABLE 107-3. DESIGN CRITERIA FOR PILES – STEEL-PIPE PILES	
Considerations	**Criteria**
Typical Length	30 to 130 feet
Disadvantages	• Displacement for closed-end pipe • Open-ended not recommended as a friction pile in granular material • Large construction access space requirements
Advantages	• Best control during installation • Low displacement for open-end installation • Open-end pipe is best against obstructions • Piles can be cleaned out and driven further • High load capacities • Easy to splice
Remarks	• Provides high bending resistance where unsupported length is loaded laterally
Typical Illustration	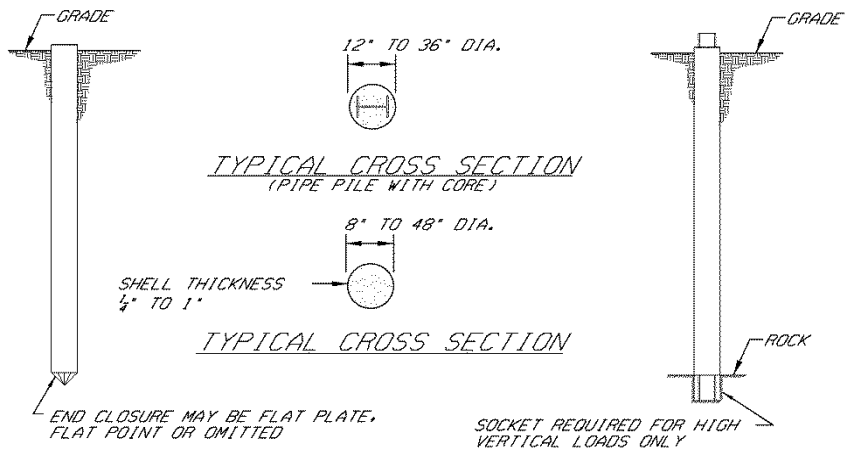

TABLE 107-4. DESIGN CRITERIA FOR PILES – STEEL SHELL AND CAST-IN-PLACE CONCRETE	
Considerations	**Criteria**
Typical Length	30 to 80 feet
Disadvantages	• Considerable displacement • Large construction access space requirements
Advantages	• Can be re-driven • Shell not easily damaged (more fragile compared to H-Piles) • Drive without a mandrell
Remarks	• Best-suited for friction piles of medium length
Typical Illustration	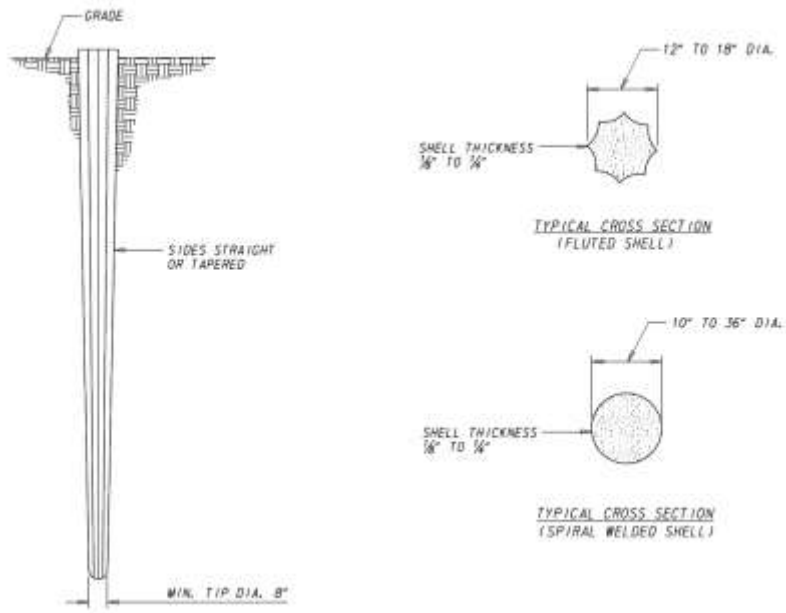

TABLE 107-5. DESIGN CRITERIA FOR PILES – STEEL H-SECTIONS	
Considerations	**Criteria**
Typical Length	40 to 100 feet
Disadvantages	• Vulnerable to corrosion where exposed • HP section may be damaged or deflected by major obstructions • Large construction access space requirements
Advantages	• Easy to splice • Available in various lengths and sizes • High capacity • Small displacement • Able to penetrate through light obstructions • Harder obstructions may be penetrated with appropriate point protection or where penetration of soft rock is required
Remarks	• Best suited for end-bearing on rock • Reduce allowable capacity for corrosive locations
Typical Illustration	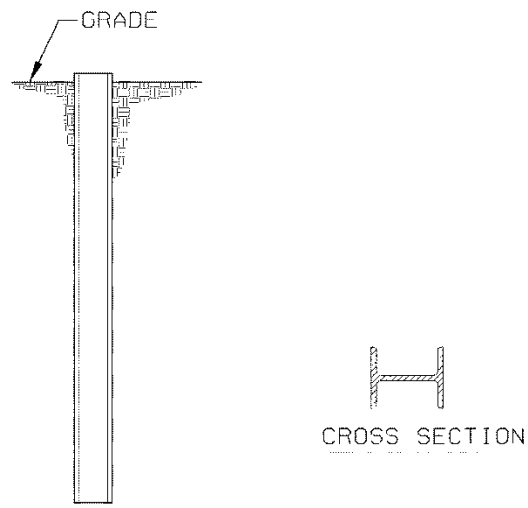

TABLE 107-6. DESIGN CRITERIA FOR PILES – TIMBER	
Considerations	**Criteria**
Typical Length	30 to 60 feet
Disadvantages	• Difficult to splice • Vulnerable to damage from hard driving • Tip may have to be protected • Vulnerable to decay when piles are intermittently submerged; it must be treated • Large construction access space requirements
Advantages	• Comparatively low initial cost • Permanently submerged piles are resistant to decay • Easy to handle
Remarks	Best-suited for friction pile in granular material
Typical Illustration	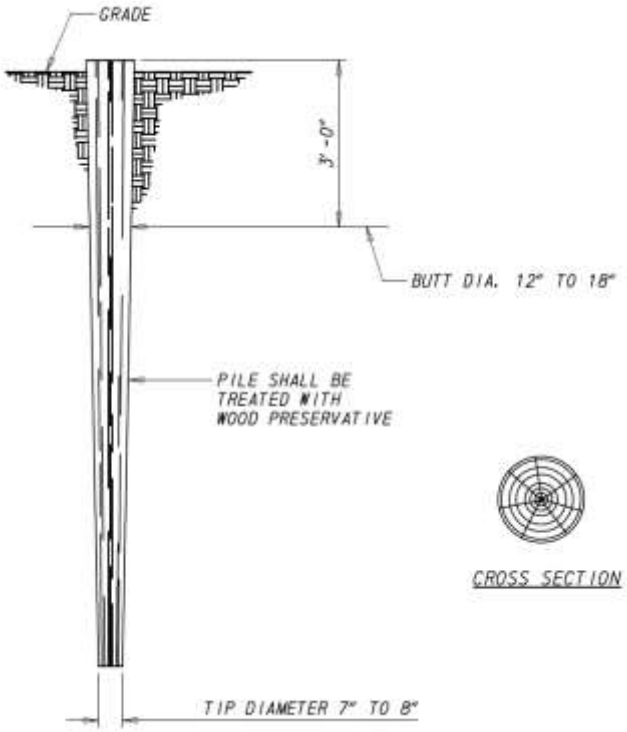

TABLE 107-7. DESIGN CRITERIA FOR DRILLED SHAFTS	
Considerations	**Criteria**
Typical Length	Up to 100 feet
Disadvantages	• Construction procedures are critical to quality • Boulders can be a serious problem, especially in small-diameter shafts • Steel casing may not be recoverable • Large construction access space requirements
Advantages	• Complete nondisplacement • Minimal vibration to adjacent structures • High side-friction and end-bearing • Good contact on rock for end-bearing • Visual inspection of augered material • No splicing required • Can be continued above ground as a column
Remarks	• Best-suited for high capacity • Suited for installation in stiff clays and rock • Not recommended for soft clay and loose sands
Typical Illustration	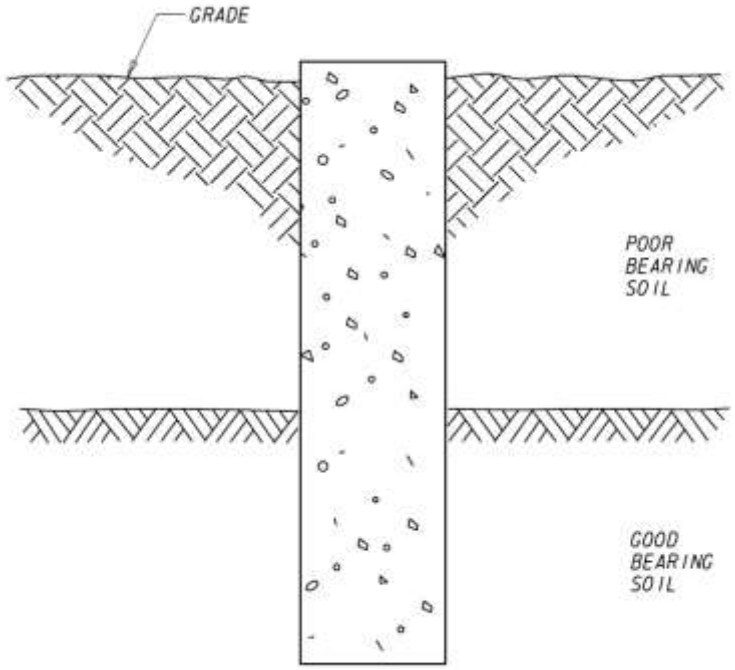

TABLE 107-8. GUIDE TO PILE-TYPE SELECTION FOR SUBSURFACE CONDITIONS	
Typical Problem	**Recommendations**
Boulders overlaying bearing stratum	Use heavy nondisplacement pile with a point and include contingent pre-drilling bid item in contract.
Loose, cohesionless soil	Use tapered pile to develop maximum skin friction.
Negative skin friction	Use smooth steel pile to minimize drag adhesion. Avoid battered piles. Use bitumen coating for piles.
Deep, soft clay	Use rough concrete piles to increase adhesion and rate of pore water dissipation.
Artesian pressure	Caution required when driving thin-wall pile shells due to potential collapse of shell from hydrostatic pressure. Pile heave is common for closed-end piles.
Scour	Do not use tapered piles unless large part of taper extends well below scour depth. Design permanent pile capacity to mobilize soil resistance below scour depth.
Coarse gravel deposits	Use prestressed concrete pile where hard driving is expected in coarse soils. Use of H-piles in these deposits often results in excessive pile lengths.

TABLE 107-9. GUIDE TO PILE-SHAPE EFFECTS		
Shape Characteristics	**Pile Types**	**Placement Effects**
Displacement	Closed-end steel-pipe pile and precast-prestressed concrete	Densify cohesionless soils, remold and temporarily weaken cohesive soils. Setup time or freeze for large pile groups in sensitive clays may be up to 6 months.
Nondisplacement	Steel H-pile, drilled shafts, and open-end pipe pile	Minimal disturbance to soil.
Tapered	Timber and fluted steel shells	Increased densification of soil, high capacity for short lengths in granular soils.

107.3.4.9 *Pile-Bearing Capacity*

Piles shall be designed in accordance with the specifications presented in Section A10 – Foundations and *Section 210 – Foundations*. Traditional static analyses and empirical methods based on SPTs and Cone Penetration Tests (CPTs) are acceptable for calculation of pile-bearing capacity and settlement. Resistance factors are selected based on the method of design, with modifications based on the method of controlling installation. Consideration should be given to the different behavior between individual piles and pile groups, including axial and horizontal resistance and deformation in orthogonal directions.

In addition to axial loads, piles are expected to transmit lateral loads into the soil. This causes both shearing forces and bending moments in the pile. The designer must evaluate pile structural capacity, considering the axial load, the lateral loads/moments, and the interaction of these loads. Battered piles should be evaluated for resistance of lateral loads. As an

alternative, lateral-load analysis using soil/structure interaction that employs the p-y curve method may be used.

Downdrag forces should be accounted for in the design of piles when ground settlement is in excess of 0.4 inch in relation to the pile. See Section A3 – Load and Load Factors, Section A10 – Foundations, and *Section 210 – Foundations* for detailed evaluation of downdrag forces. Batter piles should not be used if ground settlement is expected to be greater than 0.25 inch, unless the effect of pile bending is evaluated.

During design, pile drivability should be evaluated by the designer using wave equation analyses. Use GRLWEAP to verify piles can be driven to the required depths without encountering refusal or overstressing the pile.

During construction, the Department or their designee shall use the PDA to determine bearing capacity, maximum stresses during driving, and pile integrity. The data from the PDA are also used to run the CAPWAP computer program. This program obtains a "best possible match" between measured and computed pile-driving variables. If necessary, a static pile load test can be specified. Load testing is the most accurate method of verifying pile capacity. The designer must specify the type of load test (dynamic or static) to be used. See Section A10 – Foundations, *Section 210 – Foundations*, and FHWA DCDPF for more details.

107.3.5 Additional Foundation Details

107.3.5.1 *Design Footing and Pile Resistance*

The Contract Plans shall contain notes that specify the maximum factored foundation-bearing resistance, ultimate bearing resistance, and controlling load case for spread footings on soil or rock. If pile-supported, the notes shall specify the maximum factored pile load, ultimate pile resistance, and controlling load case. For spread footings on rock, the bearing resistance shown on the plans should be rounded to the nearest one-half ton/ft^2.

107.3.5.2 *Scour*

For stream environments, bottom of footings/pile caps shall be located to satisfy scour requirements. The bottom-of-footing elevations are to be placed based on the depth to rock, scour depth, and stream bed elevation, based on the following guidelines:

1. Spread Footings on Bedrock
    a. Bottom of footing shall be a minimum 6 feet below adjacent streambed elevation.
    b. Bottom of footing should be below the scour depth.
    c. Limit items (a) and (b) to bottom of footing maximum 3 feet below top of rock.
2. Spread Footings on Soil
    a. Top of footing should be below total scour depth.
    b. Bottom of footing should be minimum 6 feet below adjacent streambed elevation.

3. Footings on Piles/Drilled shafts

   a. Top of footing should be below contraction scour depth (only contraction scour, not total).

   b. Bottom of footing should be a minimum of 6 feet below adjacent streambed elevation for piers, and 4 feet for abutments.

   c. Piles/drilled shafts should be assumed to be unsupported down to the total scour depth.

If properly designed scour protection in the form of riprap or guide banks is used, local scour can be neglected for abutments. If riprap is not used at the abutments, account for local scour, or demonstrate other means of scour protection.

107.3.5.3 *Stepped Footings*

The use of stepped footings may be warranted in some cases, such as a variable rock elevation, or a long wall where the required bottom-of-footing elevation changes for cost saving considerations.

A stepped spread footing on rock shall have steps at least 8 feet in length and at least a 2-foot change in height. The maximum step height should be 5 feet.

Stepping spread footings on soil or pile foundations should only be used for wingwalls and retaining walls longer than 25 feet. The minimum length of each step section should be 12 feet, and the change in height of each step should be at least 2 feet. The maximum step height should be 5 feet.

Stepping of the leveling pad for MSE walls on embankments is permitted. The minimum length of a step section is the width of one panel. The height of a step for this type of wall system should be in increments of one-half of the panel height.

107.3.5.4 *Corrosion and Deterioration*

See *Section 210 – Foundations* and Section A10.7.5 – Corrosion and Deterioration for conditions, which are indicative of potentially corrosive soil and groundwater, and require consideration of protective measures.

The designer shall evaluate protective measures for footings, piles, and drilled shafts, including consideration of the soil and groundwater conditions at the site. The evaluation shall be performed for each situation based on the level of deterioration anticipated, the practicality of applying protective measures, and cost.

107.3.5.4.1 Concrete Footings, Piles, and Shafts

In any corrosive medium that includes potential deterioration due to sulfates in soil, groundwater, or salt water; chlorides in soils and chemical wastes; acidic groundwater; and organic acids, a dense, impervious concrete shall be used. The following measures shall be taken on all concrete elements used in corrosive environments:

1. Minimum concrete cover as follows:

a. Cast-in-place reinforced concrete, 3 inches

b. Precast reinforced concrete, 3 inches

c. Prestressed concrete / prestressed strands – 2½ inches; secondary reinforcement – 1½ inches

2. Maximum water/cement ratio of 0.45 (by weight)

3. Use of air entrainment

4. No concrete additives containing chlorides

5. Use of epoxy-coated reinforcement

6. Use of sulfate cement, as per Table 107-10

TABLE 107-10. RECOMMENDED CONCRETE TYPE IN CORROSIVE ENVIRONMENTS

Water-Soluble Sulfate in Soil (%)	Sulfate in Water (parts per million)	Cement Type
0.10 to 0.20	150 to 1,500	II
0.20 to 2.00	1,500 to 10,000	V
> 2.00	> 10,000	V plus Pozzlan

In all cases where concrete piles are exposed above ground, the piles shall be protected by the application of a silane coating. The coating shall extend at least 5 feet below the stream bed or ground surface.

107.3.5.4.2 Steel Piles and Casings

The following measures shall be considered for protection of steel piles against deterioration by corrosion.

1. Deduct 1⁄16 inch (minimum) from the exposed surface of the pile used to compute section capacity. Corrosion losses are typically assumed to be less than 1/16 inch, based on collective experience.

2. Apply a coating, such as a coal-tar epoxy, which has good dielectric strength; is resistant to abrasive forces during driving; and has a proven service in the type of corrosive environment anticipated. The reduction in skin resistance shall be accounted for in the pile design.

107.3.5.4.3 Timber Piles

Untreated timber piles shall be used only for temporary construction. Timber piles for permanent construction shall be protected by the application of the preservative, chromate copper arsenate (CCA), in accordance with the Standard Specifications.

107.3.5.4.4 Stray Currents

Steel and concrete piles and foundations located near sources of direct currents (i.e., electric transit systems, welding shops, cathodic protection systems) may be subject to damage from

stray currents. To protect against stray current damage, steel piles shall be electrically connected and grounded to the current source. Concrete piles shall be similarly grounded with electrical continuity between all reinforcement. The effects of stray currents on prestressed piles can lead to pile failure, and prestressed piles should not be used in areas of potential stray currents.

107.4 Substructure Design

Abutments, piers, and retaining walls are to be designed for all applicable loads in accordance with Section A3 – Loads and Load Factors, and as supplemented by *Section 203 – Loads and Load Factors*, including, but not limited to, lateral earth and water pressures, live-load and dead-load surcharge, wind load on substructure, self-weight of the wall, temperature and shrinkage effects, and seismic loading. Long-term effects of corrosion, seepage, stray currents, and other potentially deleterious environmental factors are to be considered for all substructures.

107.4.1 Abutment Design

Abutments support the end spans of the bridge and retain the approach roadway embankment. A properly designed abutment provides safety against overturning about the toe of the footing, against sliding on the footing base, and against bearing failure and crushing of foundation material or overloading of the piles.

The Department typically uses four types of abutments:

1. Semi-integral abutments
2. Integral abutments
3. Reinforced-concrete stub abutments
4. Reinforced-concrete cantilever

For guidance on determining abutment type and general design guidelines, see *Section 103.6 – Substructure Type Selection*. Additional design guidance for the four types of abutments is listed below in the order of Department preference.

107.4.1.1 *Semi-Integral Abutments*

Semi-integral abutments are a class of abutments where the superstructure is integrally connected to the abutment. The semi-integral abutment approach includes a joint that allows for unrestrained rotation of the superstructure and thermal movements.

The superstructure for semi-integral abutments is generally supported on bearings similar to conventional abutment detailing, thereby allowing longitudinal translation relative to the stationary abutment. The beam ends are encased in a full-height concrete diaphragm. A semi-integral differs from an integral abutment in that the concrete diaphragm remains separate from the abutment stem. Therefore, the foundation design of the abutment is similar to conventional reinforced-concrete abutments, and can be supported by either a shallow or deep foundation.

Semi-integral bridge abutments can be used for much longer bridges than integral abutments, because the movement capacity is not limited by the pile movement/bending capacity. Additionally, bridge rehabilitations can convert conventional abutments into semi-integral abutments to eliminate the deck joints above the beam ends, while retaining most of the existing abutment.

107.4.1.1.1 Geometry Considerations

Approach slabs are required for all semi-integral abutments having a total thermal expansion length exceeding 1/2 inch. The approach slab shall be seated on the concrete end-diaphragm. The approach slab shall be curb-to-curb, but not anchored to the wingwalls. Wingwalls are to be positively connected to the abutment. To reduce friction between the approach slab and base course, provide two 2 mil polyethylene sheets between the approach slab and base course.

Provide expansion joints for utilities, concrete barriers, guardrail, and other roadway features that pass over the integral abutments and onto the approach slab.

107.4.1.1.2 End-Diaphragm Design

The concrete end-diaphragm for semi-integral abutments shall be designed as a horizontal beam between the girders, resisting the passive-lateral soil pressure from the backfill.

107.4.1.1.3 Abutment Stem and Foundation Design

The abutment stem of a semi-integral abutment is similar to a standard reinforced-concrete abutment. Refer to *Section 107.4.1.4 – Reinforced-Concrete Cantilever Abutments* for additional guidance on semi-integral stem-abutment design.

The foundation of semi-integral abutments can be either a deep or shallow foundation.

107.4.1.1.4 Semi-Integral Abutment Behind MSE Wall

Semi-Integral abutments may be placed behind a proprietary wall, such as an MSE wall. See *Section 107.4.1.3.1 – Stub Abutments Behind MSE Wall* for design guidance.

107.4.1.2 *Integral Abutments*

Integral abutments are a class of abutments where the superstructure is integrally connected to the abutment and the abutment foundation. Typically, the foundation is a deep foundation capable of permitting necessary horizontal movements. Fixity is accomplished by attaching the superstructure to the substructure, or monolithically pouring the superstructure slab with the abutments.

Integral abutments are not to be constructed on spread footings founded or keyed into rock. Movement calculations should consider temperature, creep, and long-term prestress shortening in determining potential movements of the abutments.

Superstructures consisting of steel I-beams, concrete I-beams, and concrete spread-box beams are allowed to be used with integral abutments. Maximum girder depth shall not exceed 72 inches.

107.4.1.2.1 Geometry Considerations

Approach slabs are required for all integral abutments having a total thermal expansion length exceeding ½ inch. The approach slab shall be connected to the abutment with reinforcement bars. The approach slab shall be curb-to-curb, but not anchored to the wingwalls. Wingwalls are to be positively connected to the abutment. To reduce friction between the approach slab and the base course, provide two 2-mil polyethylene sheets between the approach slab and base course.

Provide expansion joints for utilities, concrete barriers, guardrail, and other roadway features that pass over the integral abutments and onto the approach slab.

107.4.1.2.2 Integral Abutment Pile Foundation Design

Foundations for integral abutments shall consist of a single row of vertical H-piles, oriented with their web normal to the centerline of beam to provide adequate vertical-load capacity and reasonable flexibility for accommodating the longitudinal bridge movements. Both end-bearing and friction piles are permitted. Piles can be driven or installed in predrilled holes filled with loose sand or pea gravel to assure adequate pile flexibility. Holes shall be filled after placing the piles, but before pile driving. Piles shall be embedded a minimum of 2 feet into the pile cap. The bottom of the pile cap is to be placed below the frost depth.

For structures with a span length over 100 feet, oversize pre-augured holes shall be used. The minimum depth of the pre-augered holes is 10 feet. Oversize pre-augered holes shall have a diameter equal to 10 inches plus the pile diagonal width, or a total diameter of 2 feet, whichever is greater. Oversized pre-augered holes shall be backfilled similar to regular predrilled holes after placing the pile, but before driving it.

Piles shall be designed for vertical superstructure and substructure loads, in addition to thermal movements. For friction piles with a movement greater than 0.02 times the pile width, the top portion of the pile above the depth corresponding with the 0.02 times the pile width deflection shall be ignored when determining pile capacity. For friction piles where pre-augering is necessary, the top portion of the pile located on the pre-drilled sand/pea gravel–filled casing shall be ignored for frictional resistance.

The designer must also determine the rotational demand and inelastic rotational capacity (i.e., ductility check) of the pile as part of the pile design. Note that computed bending moments at the pile head due to fixity must not exceed the reduced plastic hinge capacity of the pile. See *Section 107.5.4 – Pile Bents* for the definition and determination of point-of-fixity.

The pile size shall be governed based on the following three scenarios:

1. Capacity of steel member based on moment and axial forces in pile;
2. Capacity of the pile to transfer load to the ground; and
3. Capacity of the ground to support the pile.

107.4.1.2.3 Pile Cap Design

Abutment pile caps are to be limited to a maximum of 10 feet in height. Pile caps are designed for horizontal passive pressure and vertical loading as beams spanning between the foundation elements. The design should include the calculation of vertical moment and shear.

107.4.1.2.4 Superstructure/Substructure Connection

The superstructure/substructure connection for integral abutments should allow for rotation by introducing a hinge at the connection.

107.4.1.2.5 Integral Abutment Behind MSE Wall

Integral abutments may be placed behind a proprietary wall, such as an MSE wall. In this type of substructure, the pile cap is designed to carry, by beam action, the gravity loads from the bridge superstructure to the pile foundation. Longitudinal loads and movement from the bridge superstructure directly affect the MSE wall, and the MSE wall is to be designed for these additional loads.

107.4.1.3 *Reinforced-Concrete Stub Abutments*

Stub abutments are frequently built on pile foundations, and used where the need to retain soil is minimal.

Stub abutments may be designed with a fixed backwall and conventional deck joint, or as a jointless or semi-integral abutment.

Stub abutments are typically placed on embankments in roadway fill sections. Provide a bench at the top of the slope in front of the stub abutment for ease of inspection, in accordance with *Section 103.6.2 – Abutments and Wingwalls*.

107.4.1.3.1 Stub Abutments Behind MSE Wall

Stub abutments may be placed behind a proprietary wall, such as an MSE wall. Typically, abutments constructed behind MSE walls are founded on vertical piles; however, stub abutments without piles behind MSE walls may be considered, with approval from the Bridge Design Engineer.

In this type of substructure, the pile cap is designed to carry, by beam action, the gravity loads from the bridge superstructure to the pile foundation. Horizontal loads and movement from the bridge superstructure are independent of the MSE wall, while the lateral earth pressure is restrained by the MSE wall.

Piles shall be encased in pipe sleeves that extend from the bottom of the abutment footing to the bottom of the wall excavation when significant downdrag is anticipated. The annular space between the sleeve and the pile shall be filled with pea gravel (AASHTO No. 8 aggregate) or other granular material. Piles shall not be driven through a sleeve. Piles should be driven, and the sleeves installed around the piles, before construction of the MSE wall.

Soil reinforcement shall be attached to the rear face of the stem. These additional soil reinforcements are necessary to resist longitudinal bridge and backwall forces, and prevent load transfer to the coping and facing panels. All longitudinal loads that are to be resisted by the abutment soil reinforcements must be indicated on the plans.

If steel H-piles are used, they should be oriented with their webs parallel to the centerline of beam to resist transverse loads from the superstructure.

The following shall serve as guidelines for the geometry of stub abutments behind MSE walls:

1. As a preliminary starting point for determining span length, the centerline of bearings should be assumed as 4 feet, a monolithic headwall shall be provided at each end to join the adjacent longitudinal barrels inches behind the front face of the MSE wall.
2. A minimum distance of 2 feet shall be provided between the back of the MSE panel and the front face of the abutment footing.
3. The top of the MSE wall coping in front of the abutment footing shall be set 1 foot above the berm elevation.
4. A minimum vertical clearance of 4 feet shall be provided between the bottom of the superstructure and the berm in front of the abutment footing.

For additional information and details related to MSE walls, see *Section 107.6.1 – Mechanically Stabilized Earth Walls*.

107.4.1.4 *Reinforced-Concrete Cantilever Abutments*

Cantilevered abutments are designed to support reactions from the superstructure and resist thrust from the earth backfill. Wingwalls extending from cantilevered abutments shall be carried to the footing the entire length, and may be U-shaped or flared. Use of such cantilevered wingwalls is prohibited, due to the difficulty of compacting under the cantilevered portion of the wall.

Reinforced-concrete cantilever abutments are limited to 25 feet in height. Abutments with short heels shall be designed using Coulomb active-earth-pressure coefficients, because the full soil wedge cannot develop; see Section A3.11.5.3 – Active Lateral Earth Pressure Coeffiicient.

Reinforced-concrete cantilever abutments may be designed with a fixed backwall and conventional deck joint, or as a jointless or semi-integral abutment.

Provide a vertical expansion joint every 90 feet and a vertical contraction joint every 30 feet in the abutment wall. Expansion and contraction joints shall not be located in areas directly below the superstructure bearings. Reinforcing-steel shall not project through expansion joints.

An expansion joint shall be filled with preformed expansion joint material and include a waterstop, in accordance with the Standard Specifications.

107.4.1.5 *Abutment, Backwall, and Wingwall Details*

107.4.1.5.1 Stem Thickness and Seat Width

The stem thickness of abutments is generally governed by the size of the bridge seat required for clearance between the superstructure and the backwall, the bearings and the backwall, and seismic criteria. For bridges with a pier, seismic criteria may dictate the support length at the ends of beams. The minimum support length (N) in the longitudinal direction should be

measured perpendicular to the centerline of bearing. The minimum support length (N) in the transverse direction should be measured perpendicular to the centerline of the beam. The minimum support length shall meet the requirements *of* Section A4.7.4.4 – Minimum Support Length Requirements. The minimum bridge seat width is 3 feet for steel, bulb-tee, and AASHTO I-Beam superstructures and 2 feet for adjacent concrete box beam superstructures. Beam seats shall be designed to accommodate future jacking of the superstructure for bearing replacement, where practical. Alternatively, provide details for anchorage of a future jacking bracket on the front face of the abutment or pier.

107.4.1.5.2 Wall Batter

The front face of abutments and wingwalls shall be constructed plumb. The rear face of abutments shall also be constructed plumb. The rear face of wingwalls shall be battered at a rate of 2 Horizontal to 12 Vertical. Short wingwalls less than 10 feet may have a plumb rear face.

107.4.1.5.3 Bearing Pedestal Dimensions

The minimum height of the shortest bearing pedestal is 4 inches. If the difference in height between the fascia pedestals is more than 6 inches, then a stepped bridge seat should be used, with both fascia pedestals being set at the minimum height. Pedestals heights should generally be limited to 1 foot, 6 inches. If pedestals greater than 1 foot, 6 inches are required, they should be investigated for their strength acting as a short column.

The minimum distance from the center of the bearing anchor bolt to any exposed vertical face of the bearing pedestal shall be 8 inches. In addition, the minimum distance from the edge of the masonry plate or bearing pad to any vertical face of the bearing pedestal shall be 3 inches, unless otherwise accounted for in the design. Masonry plate corners may be clipped to satisfy this requirement. The front face of all bearing pedestals shall be 1½ inches from the front face of the abutment.

Six-inch-diameter sleeves or block-outs must be used at each bearing pedestal for locating anchor bolts. Anchor bolts must be placed and grouted into the block-outs following bearing installation to ensure proper placement of the anchor bolts. The designer may consider using reduced size block-outs to accomadate project specific abutment top main reinforcement detailing, but the block-outs must be no less than 3 times the diameter of the anchor rod. The bridge seat between bearing pedestals shall be sloped away from the backwall at a rate of ¼ inch per foot to ensure adequate drainage.

107.4.1.5.4 Drainage

The fill material behind all walls shall be effectively drained. The preferred method for providing drainage is the use of a 4-inch-diameter pipe drainage system. The pipe system shall be sloped to allow drainage. The pipe drainage system shall have outlets at 50-foot intervals.

If a pipe drainage system is not feasible, abutment drainage shall be provided using weepholes through the front face of the abutment and wingwalls. The weepholes shall be provided at a maximum spacing of 25 feet. Weepholes shall be located so that their invert is 6 inches above the finished grade or mean low water elevation in the case of structures adjacent to waterways.

107.4.1.5.5 Protective Sealing of Surfaces

The exposed faces of abutments and wingwalls shall be protected by the application of a sealing material. Specifications for these sealing materials are available in the Standard Specifications and should be applied and cured in accordance with manufacturer's recommendations.

1. Epoxy Sealer – an epoxy sealer shall be applied to the beam seats, bearing pedestals, and the vertical surface of the backwall for abutments with joints.

2. Silicone Sealer – a silicone sealer shall be applied to all exposed concrete abutment and wingwall surfaces, which do require an epoxy sealer.

The designer should include an illustrative detail with call-outs in the plans to describe the position, location, and area required to be sealed. Project notes, in the absence of a sketch, should not be used to describe the application of protective sealers, because there can be both description and interpretation problems.

107.4.1.5.6 Wingwalls

Wingwalls shall be of sufficient length to prevent the roadway embankment from encroaching on the stream channel or clear opening. Generally, the slope-of-fill shall be assumed as not less than 2 Horizontal to 1 Vertical, and wingwall lengths will be computed on this basis. Tops of wingwalls shall extend a minimum of 6 inches above the finish grade of the fill slope.

Wingwalls shall be designed as retaining walls. Refer to *Section 107.6.2 – Reinforced-Concrete Cantilevered Walls*.

Cantilevered wingwalls should be designed to function independently from the abutment, but detailed with a positive moment connection. Likewise, footings shall be constructed integral, but assumed separated.

The minimum thickness of reinforced concrete wingwalls, measured at the top of the wall, is 1 foot.

Flared cantilevered wingwalls, used in conjunction with cantilevered abutments, shall be positioned so that the front face of the wingwall is flush with the front face of the abutment.

Cantilevered wingwalls shall not be used with integral abutments, because the walls will create additional pressures due to superstructure movement.

107.4.1.5.7 Cheekwalls

Cheekwalls shall be used below the soffit of the bridge deck at the fascia of the superstructure. The cheekwall should tie into the backwall, and the leading edge of the cheekwall should be flush with the front face of the abutment. The minimum width of the cheekwall shall be as required to meet all reinforcement clearance requirements. The vertical termination of the cheekwall should be +/- 1 inch below the soffit of the bridge deck.

107.4.1.5.8 Scour Protection

Slopes in front of abutments must be protected from erosion created by the action of streams or stormwater through the placement of scour protection. Refer to *Section 104.4 – Scour Evaluation and Protection*, for details and design guidance.

Drainage from the above roadway shall be directed away from the wingwall and abutment.

107.4.1.5.9 Roadside Treatment Under Structure

Below structures, the area between the roadway shoulder and the drainage roadside ditch is to be paved with properly designed asphalt concrete pavement or bituminous pavement millings. The ditch may be paved, or appropriately size riprap should be placed.

Grass roadway median or shoulder may be continued into the underside of an overpass bridge if sunlight and water are determined to be adequate due to height, width or orientation of the overpass and the topography of the site.

107.4.1.5.10 Adhesive Anchors

The use of adhesive anchors to extend steel reinforcement beyond a construction joint is prohibited. Reinforcement shall be made continuous through construction joints by the use of reinforcement lap splices, mechanical couplers, or threaded inserts.

The use of adhesive anchors is also prohibited in tension applications for permanent installations.

Adhesive anchors may be considered, with the approval of the Bridge Design Engineer, in substructure widening or rehabilitation applications.

107.4.1.5.11 Backfill

Backfill at conventional reinforced-concrete abutments and wingwalls shall be Type C borrow in accordance with the Standard Specifications. The Department will consider allowing backfill with granular, porous stone, such as DelDOT No. 57 stone or similar, if a special provision and detail are developed by the Designer and approved by the Department.

Backfill at integral and semi-integral abutments shall be a granular material in accordance with the Standard Specifications. Flowable fill and large stone fill is prohibited in conjunction with integral abutments. A 1-inch-thick sheet of preformed cellular polystyrene shall be placed against the entire area of the back face of the abutment below the bottom of the approach slab. The fill within a 2-foot width directly behind both the abutment and the wingwalls shall be nominally compacted using two passes of a walk-behind vibratory-plate soil compactor. The fill in this area shall be compacted in 4-inch-high lifts. The fill behind both abutments shall be compacted simultaneously to keep passive pressure equal on both abutments during construction. The difference in fill at the abutments shall not exceed 1 foot.

Backfill at proprietary retaining walls shall conform to manufacturer's recommendations.

107.5 Pier Design

Multiple criteria and considerations are to be used when choosing the most economical and structurally appropriate type of pier for the design. These include:

1. Separate or continuous footings
2. Footing size
3. Type of pier-column, solid shaft, or hammer head
4. Number, spacing, and size of columns
5. Shaft dimensions
6. Cap size.

For guidance in choosing the appropriate type of pier to be used, see pier selection guidelines in *Section 103.6.3 – Piers*.

107.5.1 Pier Analysis and Design

Piers are to be designed for all applicable loads, including, but not limited to, lateral earth and water pressures, live-load and dead-load surcharge, wind loading, seismic loading, self-weight, temperature and shrinkage effects, and stream, ice, and drift forces. Long-term effects of corrosion, seepage, stray currents, and other potentially deleterious environmental factors are to be considered for all substructures.

Piers shall be designed for 2-inch longitudinal eccentricity from the theoretical centerline of bearing to compensate for the incidental field adjustments in the locations of the bearings. The eccentricity does not need to be considered for the design of pier footings.

Generally, one- and two-column piers should not be considered due to the lack of redundancy.

107.5.2 Fixity Considerations

Single bearing lines (or two lines if bridge is made continuous for live load) atop piers can be either expansion or fixed. When the height of the pier is more than 50 percent of the length of the superstructure from the point of zero thermal movement to the pier, it may be assumed that a fixed pier will bend sufficiently to permit the superstructure to expand or contract without appreciable stress in the columns. The height of the pier is measured from bottom of footing to the bottom of the bridge bearing. This assumption is valid only on piers with a skew less than 20 degrees.

Consecutively fixed piers may be considered outside of the above guidelines; however, columns must be designed to bend sufficiently to permit the superimposed structure to expand and contract. Refer to *Section 106.10.6 – Consecutively Fixed Piers*.

107.5.3 Pier Detailing

For pier detailing, the designer shall adhere to the following criteria:

Pier columns for cap-and-column (multi-column) piers shall be circular, with a minimum diameter of 2 feet 6 inches, with 3 feet preferred. The column diameter shall be modified from the minimum in 6-inch increments. Columns shall be spaced to be appealing to the eye. The minimum center-to-center spacing is 15 feet. Spiral reinforcement for pier columns shall extend to full height of the column.

The ends of the pier caps shall project beyond the sides of the columns when possible to balance the positive and negative moments. Pier caps shall be a minimum of 6 inches wider than the diameter of the column, but no more than 1 foot wider than the diameter of the columns. Multi-column piers adjacent to roadways may need crash protection, in accordance with AASHTO Roadside Design Guide requirements.

Solid wall piers are to have a minimum thickness of 2 feet, and may be widened at the top to accommodate the beam seat, when required.

The minimum width of the pier cap for all pier types is 3 feet. Bearing pedestals shall be constructed to provide a level bearing area for each beam. The minimum height of the shortest bearing pedestal is 4 inches. Pedestal heights should generally be limited to 1 foot 6 inches. If pedestals greater than 1 foot 6 inches are required, the top of the pier cap shall be sloped and pedestal heights reduced.

The minimum distance from the center of the bearing-anchor bolt to any exposed vertical face of the bearing pedestal shall be 8 inches. In addition, the minimum distance from the edge of the masonry plate or bearing pad to any vertical face of the bearing pedestal shall be 3 inches, unless otherwise accounted for in the design. Masonry plate corners may be cropped to satisfy this requirement. The front face of all bearing pedestals shall be flush with the front face of the pier.

Six-inch-diameter sleeves or block-outs must be used at each bearing pedestal for locating anchor bolts and allowing for adjustments. Anchor bolts must be placed and grouted into the block-outs following bearing installation to ensure proper placement of the anchor bolts. The designer may consider using reduced size block-outs to accommodate project-specific pier top main reinforcement detailing, but the block-outs must be no less than three times the diameter of the anchor rod.

The bridge seat between bearing pedestals shall be crowned and sloped (longitudinally) at a rate of 1/4 inch per foot to ensure adequate drainage.

Cheekwalls (or curtain walls) shall not be constructed on pier caps at the fascia of the superstructure.

See *Section 315.01 – Reinforced Concrete Pier Details*, for additional pier details.

107.5.4 Pile Bents

Pile bents have proven to be an economical choice for multi-span structures crossing rivers with low- to mid-level clearance. Where piles are subject to wet and dry cyclic exposure, only concrete piles with pile protection should be used. The protective coating is applied to the surface of the precast, prestressed concrete piles after the pile is cast. Steel shell, steel H-piles, and steel-pipe piles should not be used in water due to durability and environmental impacts involving maintenance cleaning and painting.

The principal issue in the design of pile bents is bending and buckling of the partially embedded piles. In evaluating possible buckling of a partially embedded pile and in performing frame analyses, it is necessary to estimate the “point of fixity.” The term “fixity” is “point of zero deflection" interpreted to mean restraint against rotation and lateral displacement (see Figure 107-1).

The effective length equals K·H for analysis of allowable axial loads (see Figure 107-2). Recommended K Values for the recommended design values for K. These values are for a pile assumed to be fixed at the bottom.

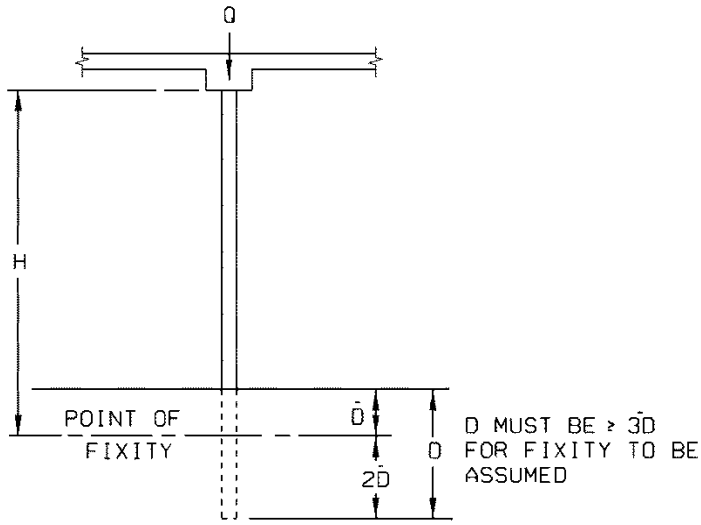

FIGURE 107-1. POINT OF FIXITY

DIRECTION	LONGITUDINAL		TRANSVERSE	
LOCATION TYPE	2 ROWS BATTERED	SINGLE ROW	BATTERED END	PLUMB PILE
RECOMMENDED DESIGN K VALUE	.65	1.6	0.65	1.2

FIGURE 107-2. RECOMMENDED K VALUES

Software for soil/structure interaction that uses the p-y curve method should be used to determine the point of fixity. Programs such as AllPile may be used for analysis. On a plot of horizontal deflection against pile depth, the point of fixity is defined as the uppermost depth where the calculated lateral deflection crosses the vertical axis (zero deflection). For the pile to be fixed, lateral deflection has to be zero at least two different depths. Short piles with no fixity developed will typically exhibit rotation about a pivot point at a depth of zero deflection.

The designer may need to examine several loading conditions to establish a consistent point of fixity for structural design.

The stability of the structure must be carefully investigated and include nonlinear P-Δ effects, frame buckling, and beam-column interaction behavior.

Design details for the pier cap of pile bents shall be similar to those presented in *Section 107.5.3– Pier Detailing*.

107.5.5 Protective Sealing of Surfaces

The exposed faces of piers shall be protected by the application of a sealing material. Specifications for these sealing materials are available in the Standard Specifications.

1. Epoxy Sealer – an epoxy sealer shall be applied to the beam seats and bearing pedestals.
2. Silicone Sealer – a silicone sealer shall be applied to all exposed concrete pier surfaces that do not require an epoxy sealer.

The designer should include an illustrative detail with call-outs in the plans to describe the position, location, and area required to be sealed. Project notes, in the absence of a sketch, should not be used to describe the application of protective sealers, because both description and interpretation problems can exist.

107.6 Retaining Wall Design

Retaining walls are designed to withstand lateral earth and water pressures, including live-load and dead-load surcharges, the weight of the wall, temperature and shrinkage effects, and earthquake loads, in accordance with Section A11.5 – Limit States and Resistance Factors. Design of retaining walls shall be in accordance with Section A11 – Walls, Abutments and Piers; and *Section 211 – Abutments, Piers, and Walls*. See also Section A3 – Loads and Loads Factors for applicable sections regarding earth pressure calculations.

Passive pressure resistance to sliding or overturning from soil in front of the footing or wall is only considered for sheet-pile walls or post-and-plank walls.

The following typical retaining wall types are used in Delaware:

1. Mechanically stabilized earth (MSE) walls
2. Reinforced-concrete cantilevered walls
3. Post-and-plank walls
4. Sheet-pile walls

107.6.1 Mechanically Stabilized Earth Walls

MSE walls use metallic or polymeric tensile reinforcement in the soil mass and modular precast concrete panels, or shotcrete. Typically, these walls are used in a fill condition. The Department only allows the use of galvanized metallic and polymeric reinforcement and precast concrete panels.

In locations where retaining walls are needed to reduce span lengths or facilitate construction, MSE walls should be considered. MSE walls can be economical where high wall heights are dictated by site conditions. Other considerations should be included in the evaluation, such as economics, location, construction requirements, and aesthetics. MSE walls have proven to be very economical to build in roadway fill conditions, especially for long abutments. They should also be considered when constructing a dual highway over secondary roads. This type of construction can also reduce span lengths, saving on superstructure construction costs.

Due to concern for the erosion of the backfill material, however, MSE walls should not be used in tidal areas, or other locations where water might reach the wall, unless approved by the Bridge Design Engineer.

Additionally, careful consideration must be given to the presence and location of utilities in the vicinity of MSE walls. Unprotected pressurized water mains or sewer facilities shall not be allowed in the backfill area of an MSE wall.

As simple retaining walls, MSE walls are generally considered for a range of heights: from 10 feet to 65 feet. When used in conjunction with an abutment, wall heights are limited to a maximum of 35 feet.

107.6.1.1 *Select Granular Backfill*

Backfill used for MSE walls shall be in accordance with manufacturers' recommendations, and must ensure adequate drainage behind the wall. The Department is requiring the use of Delaware No. 57 stone backfill behind the initial 3 feet of the MSE wall panels in the reinforced fill for drainage purposes. Backfill shall extend 1 foot beyond the limits of the reinforcement.

107.6.1.2 *Designer Responsibility*

For the design of an MSE wall, the designer is responsible for providing sufficient information in the Contract Plans, so that prior to submitting a bid, the Contractor can select a proprietary company to design the internal stability of the wall after the project is awarded. The minimum information required on the plans includes:

1. Plan, elevation, and sections illustrating all geometry for the MSE wall;
2. Location of utilities and roadway appurtenances such as barriers, lighting, and drainage facilities;
3. Location of temporary excavation support systems;
4. Limits of excavation;
5. Factored soil-bearing capacity at the base of the wall;
6. Vertical dead and live loads, horizontal loads, and pressures applied to the wall from the bridge abutment or supporting foundation;
7. Minimum recommended base width based on external stability (bearing capacity, sliding, overturning) and global stability; and

8. Soil parameters, including unit weights, friction angles, earth-pressure coefficients, and water-table elevation.

The designer shall be responsible for ensuring the MSE wall proposed on the Contract Plans meets external and global slope stability requirements.

107.6.1.3 *MSE Wall Manufacturer Responsibility*

The manufacturer of the MSE wall is responsible for designing the internal stability of the wall in accordance with the Contract Plans, Standard Specifications, and project Special Provisions.

107.6.2 Reinforced-Concrete Cantilevered Walls

Cantilevered retaining walls remain stable due to the resistance mobilized against their own weight, lateral pressures, and the weight of the soil over the heel of the footing. The efficient height range of walls of this type is 5 feet to 30 feet. This type of wall is typically used when the cost effectiveness of prefabricated wall systems is not evident; for example, geometry restraints or limited availability of select backfill.

When the height of the retaining wall varies, the design height shall be taken at the one-third point along the length of the wall from the higher end.

In general, the width (B) of the footing for a concrete cantilevered wall should range from 0.40 to 0.60 times the height (H) of the wall above the top of the footing. The B/H ratio is closer to 0.40 when the bearing soil is firm or when the footing is on piles. The B/H ratio increases as the quality of the bearing soil and coefficient of friction deceases, and the slope of the fill and any other surcharge behind the wall increases. The distance from the centerline of the wall stem to the front edge of the footing (D) should be approximately 0.15 to 0.25 times the width of the footing. The footing thickness (T) is generally between 0.10 and 0.15 times the height of the stem, but should always meet the minimum footing thickness requirement for the type of foundation selected (as presented in *Section 107.3.2 – Spread Footing Foundations* and *Section 107.3.4 – Pile Foundations*). Other wall details such as stem thickness and wall batter shall be in accordance with *Section 107.4.1.5 – Abutment, Backwall and Wingwall Details*. Retaining walls with short heels shall be designed using Coulomb active earth pressure coefficients, in accordance with Section A3.11.5.3 – Active Lateral Earth Pressure Coefficient.

107.6.3 Post and Plank Walls

This retaining wall consists of two main structural components—the piles and the planks (or lagging)—and is typically used in cut situations. The piles are driven into the ground or set into stone filled augured holes at regular spacing and to sufficient depth to mobilize sufficient passive earth pressure to withstand the lateral load from the retained fill. The lateral backfill load is transferred to the piles through the planks, which span horizontally between the piles and behave like a simple beam between two supports. The piles are commonly steel H-piles or W-sections, and the planks could be heavy wood timbers, precast concrete panels, or steel members. Piles are typically located at 4-foot to 10-foot spacings. The efficient height range of walls of this type is 5 feet to 15 feet.

The exposed height of a post-and-plank wall can be increased through the use of a non-prestressed tieback system to support the top of the retaining wall. A tied-back post-and-plank wall is efficient for a height range from 15 feet to 65 feet.

Post-and-plank walls, with or without tiebacks, are effective for both temporary and permanent construction.

Hand calculations may be used for piles embedded in uniform soil conditions with exposed wall heights less than 8 feet. For greater wall heights, software for performing soil/structure interaction analysis on single piles that employs p-y curves should be used to determine pile embedment and shear/bending forces in the pile for design. Simplified earth pressures for discrete vertical wall elements should be used in accordance with Section A3.11.5.6 – Lateral Earth Pressure for Nongravity Cantilevered Walls.

107.6.4 Sheet-Pile Walls

Sheet-pile walls may be either cantilever or anchor design. Sheet piling is driven in a continuous line to form a wall. In cantilever design, fill is then placed and compacted behind the wall. Cantilever sheet pile walls are effective in a height range from 5 feet to 15 feet. In anchored design, deadmen or driven piles are constructed behind the sheet piles, and the sheet-pile wall is anchored to them using non-prestressed tie rods and walers. Anchored sheet-pile walls are efficient for heights from 15 feet to 35 feet.

Simplified earth pressures for continuous wall elements should be used in accordance with Section A3.11.5.6 – Lateral Earth Pressure for Nongravity Cantilevered Walls.

107.6.4.1 *Steel Sheet Piles*

Cold-rolled and hot-rolled steel sheet piles are used for both temporary and permanent construction. Both tied-back and cantilever designs are allowed. The contractor is responsible for the design of temporary structures, with approval of the designs by the Department.

Where steel sheeting is used as permanent construction, the entire exposed area of sheet pile shall be encapsulated, with concrete mechanically attached to the steel sheeting.

ASTM A690 sheet piles with increased corrosion resistance should be used in marine environments. ASTM A328 sheet piles may be used in non-marine environments.

Steel sheet-pile retaining walls may be used as sea walls and for similar types of shore protection such as flood walls, levees, and dike walls used to reclaim lowlands.

In no situation will an abutment be constructed using driven-steel sheet piling as support for the vertical structural loads.

The designer should refer to the USS Sheet Piling Design Manual (1984) for additional design information.

Computer programs incorporating LRFD design such as CivilTech Shoring Suite are available.

107.6.4.2 *Concrete Sheet Piles*

Concrete sheet piles are precast, prestressed concrete members designed to carry vertical loads and lateral earth pressure. These members are connected by a keyed vertical joint

between two adjacent sheets. Geotextile fabric or suitable joint sealer is used to prevent loss of backfill material through these joints. The sheets are driven to ultimate bearing capacity using water jets, except the last 12 to 15 feet, which are driven using a suitable hammer. The use of concrete sheet piles is permissible in sandy soils only, with approval of the Bridge Design Engineer.

107.7 Culvert Design

Culverts shall be designed to meet the current and future hydraulic and transportation needs of the location.

All culverts shall be constructed of concrete under Interstate, U.S., and Delaware routes. Designers may consider using structural plate or polyethylene culverts to reinforce/reline deteriorated culverts in lieu of replacement. Refer to Section 109 – *Bridge Preservation Strategies* for information on rehabilitation of culverts.

The use of boxes or arches versus larger or multiple pipes is based on a number of factors, including hydraulic efficiency, compaction around the structure, height of fill required, supporting soil conditions, and total width of multiple cells.

For the flat topography typical of Delaware, elliptical pipes, arch pipes, or boxes may be more desirable than taller culverts. In any case, culverts should be designed to economically meet the hydraulic and environmental demand of the location.

The following additional criteria shall be considered in the design of culverts:

1. Skew culverts as required to match the stream alignment.
2. Construct no more than three culvert barrels at a single location. Wider rows of cells are undesirable because of the increased maintenance they create due to debris build-up. Single-barrel culvert designs are preferred.
3. Provide a monolithic headwall at each end to join the adjacent longitudinal barrels, when two or more single-barrel reinforced concrete box culverts are abutting.

107.7.1 Culvert Hydraulics

Culverts shall be designed to meet the hydraulic and scour requirements of Section 104 – *Hydrology and Hydraulics*.

107.7.2 Culvert Foundation Design

Subsurface investigations shall be conducted and analyzed by the designer to determine factored soil-bearing capacity. In addition, a settlement profile along the length of the culvert shall be determined when the length of culvert, depths of fill, or soil conditions warrant. Subsurface investigations and design shall be carried out in accordance with *Section 105 – Geotechnical Investigations.*

Detail a minimum of 1-foot-thick coarse aggregate for foundation stabilization under the culvert. The coarse aggregate shall extend a minimum of 2 feet beyond all sides of the culvert. For in situ soil of low bearing capacity—or that is otherwise unsuitable—extra excavating and replacing with specified backfill wrapped in geotextile separation fabric shall

be required. An additional underlying stabilization fabric may also be required. Refer to Engineering Instructions BR-16-001 – Guidance for Excavation of Unsuitable Materials for additional information.

To avoid differential settlement, culverts should not be founded partially on rock and partially on soil. If variable-depth rock is encountered in a limited area, the rock shall be removed to a minimum depth of 12 inches below the bottom of the culvert, and the area backfilled with coarse aggregate.

At least 3 feet shall be provided between multiple-round, elliptical, and pipe-arch culverts to allow for proper compaction. This spacing may be reduced if flowable fill is used. Due to the high corner pressure of pipe arches, special bedding material shall be specified, such as compacted Borrow Type C.

Requirements for excavation, backfill, and bedding are contained in the Standard Specifications. Backfill shall meet the requirements of Borrow Type C or Borrow Type B. It is recommended that Borrow Type B be used up to the estimated ground water elevation and Borrow Type C be used above the estimated ground water level.

107.7.3 Concrete Culverts

Concrete culverts commonly used by the Department include:

1. Precast concrete box culverts, in accordance with ASTM C1577
2. Precast concrete rigid frames
3. Precast concrete arches
4. Cast-in-place concrete box culverts.

Concrete culverts should be treated with a silane sealer before backfilling. Geotextile wrap shall be placed over joints to prevent loss of fill material.

Box culverts with an invert slab shall be depressed a minimum of 12 inches and backfilled with natural streambed material, unless otherwise specified by DelDOT's Environmental Group.

When identifying a precast culvert box size outside of the limitations of ASTM C1577, designers must consider the maximum size limitations for precast units. Limitations for shipping precast concrete sections are controlled by their size and weight.

The Department will consider alternative designs that meet specified design criteria. Alternate construction methods must be submitted to the Department for review. Alternate method submittals must contain detailed drawings and calculations sealed by a Professional Engineer licensed in the State of Delaware.

107.7.3.1 *Precast Concrete Box Culverts*

In most cases, the Department prefers the use of single–cell, precast, reinforced-concrete box culverts. The designer may select an appropriately size culvert section in accordance with ASTM C1577 only after a review and acceptance of the design criteria specified in Appendix

XI of the Specification. For any modification to the tabulated designs, the designer shall analyze the culvert in accordance with Section A12 – Buried Structures and Tunnel Liners.

The joint exterior shall be covered with a minimum of a 9-inch-wide wrap centered on the joint. All joints between precast sections shall be tongue-and–groove, with a neoprene gasket. Precast units shall be constructed with lifting devices to pick up the sections, and pulling holes to pull the sections together.

Precast box sections are required to be post–tensioned, unless the units act independently or are confined by the ends of the wingwalls. When post-tensioning is required, four longitudinal 1/2-inch-diameter, 270 kips per square inch, low-relaxation polypropylene-sheathed prestressing strands with corrosion inhibitor or other approved post-tensioning device, shall be placed in position through preformed holes in the corners of the precast units. These sheathed prestressing strands shall then be stressed to a total tension of 31 kips. The end anchorage forces must be considered in the box culvert design. The minimum ultimate strength of each sheathed prestressing strand is 41 kips. After post-tensioning, the exposed end of the sheathed prestressing strand shall be removed. No part of the strand or the end fittings shall extend beyond a point 2 inches inside the hand-hold pocket. The pocket shall then be filled with non-shrink grout.

When the top slab of a precast culvert is specified as the riding surface, an asphalt-impregnated waterproof membrane shall be placed and the culvert shall be overlaid with a minimum of 2 inches of bituminous concrete.

107.7.3.2 *Cast-In-Place Concrete Box Culverts*

Cast-in-place culverts are occasionally designed when site conditions are not conducive to heavy equipment, or when there are utility conflicts. Approval of the Bridge Design Engineer is required. The design shall be in accordance with Section A12.11 – Reinforced Concrete Cast-in-Place and Precast Box Culverts and Reinforced Cast-in-Place Arches.

107.7.3.3 *Reinforced Concrete Rigid Frames*

RCRF are three-sided concrete structures placed on precast or cast-in-place footings without an invert slab. These rigid frame structures are used to span streams and seasonal waterways where a natural streambed is desirable and preferred for environmental reasons. RCRFs are typically used for spans from 13 feet to 25 feet.

RCRFs may be cast-in-place or precast with cast-in-place RCRFs allowed only with approval by the Bridge Design Engineer. Generally, the use of precast sections can expedite construction to reduce inconvenience to the traveling public, and are preferred.

Refer to the Section A12.11 – Reinforced Concrete Cast-in-Place and Precast Box Culverts and Reinforced Cast-in-Place Arches for design requirements.

RCRFs support earth fills or bituminous concrete wearing surfaces, depending on the location and profile grade with respect to the top of the frame. An overlay is required for precast, but not for cast-in-place, rigid frames.

The following must be considered when the wall height for rigid frame structures is determined: size of opening to meet the hydraulic requirements; transportation costs of

prefabricated elements; transportability of the elements; and clearance for inspection, especially for flowing streams.

A haunch is required where the wall and slab join. The minimum size is 6 inches by 6 inches. Larger haunches, up to a maximum of 12 inches by 12 inches, are permitted but must be reinforced.

Depending on site conditions, rigid frames may be placed on cast-in-place spread footing, pile-supported footing, or precast spread footing. Cast-in-place and precast spread footings shall be designed as separate BOEFs.

Holes are formed in precast frames to allow placement of tie rods or post-tensioning strands to hold adjacent rigid frame sections together. Tie rods shall be tensioned. Shear keys transfer shear between adjacent sections. Shear keys are sealed by filling with high-strength, non-shrink grout.

107.7.3.4 *Concrete Arches*

Concrete arches are typically used to accommodate long-span and low-rise site requirements. Concrete arches are used to span streams and seasonal waterways, where a natural streambed is desirable and preferred for environmental or aesthetic reasons.

Precast concrete arches are preferred over cast-in-place. Refer to Section A5 – Concrete Structures and Section A12 – Buried Structures and Tunnel Liners. The design procedures in Section A5 apply for design of concrete arches, where soil interaction is not considered. Soil interaction is considered only where the arch is poured monolithically with the footing. In this case, use the procedures in Section A12. Cast-in-place and precast spread footings shall be designed as separate BOEFs.

Two layers of reinforcing steel shall be used in concrete arch ribs. Concrete arches should be damp-proofed before backfilling.

107.7.3.5 *Precast Proprietary Structures*

Precast proprietary structures may be proposed by contractors as alternatives to Department-prepared designs of rigid frames or concrete arches. Proprietary structures may be considered on a case-by-case basis, and must meet the following requirements for approval:

1. Structure is designed using the same AASHTO methods used by the Department;
2. Structural load rating is provided using accepted methods;
3. Specified minimum concrete strength is the same;
4. Documentation is provided of the structural strength of the structure, including actual test results;
5. Successful long-term service and durability is shown;
6. Connection details between units are shown; and
7. Post-tension segments are used, in accordance to the manufacturers' recommendations.

107.7.4 Pipe Culverts

For information related to the design and construction of pipe culverts, including concrete pipe, high-density polyethylene plastic pipe, and steel-reinforced polyethylene pipe, refer to *Section 350.01 – Pipe Culvert Details*.

Pipe culverts shall be designed for a Service Level I Pipe Installation, where pipe culverts are expected to have a service life of 75 years or more. The Department recommends the application of rigid pipes when a project will be bid. Refer to DelDOT DGM 1-20: *Pipe Materials*, available on the Highway Design Tab of the DRC.

107.7.5 Culvert Details

Refer to *Section 350.01 – Pipe Culvert Details*, Section *355.01 – Precast Concrete Box Culvert Details*, and *Section 360.01 – Precast Concrete Rigid Frame Details* for additional detailing guidance.

107.7.5.1 *Headwalls*

Headwalls for pipes consist of an entire retaining wall structure around the inlet and outlet of the pipe, including the footing. Headwalls shall be considered on larger pipes for hydraulic efficiency, stability, and reduced need for right-of-way acquisition.

For reinforced concrete box culverts, headwalls refer to that portion of the structure mounted on top of the box at the outlet and inlet to contain the earth on the top and around the culvert.

The minimum allowable wall thickness for headwalls is 1 foot. Typical headwall reinforcement for headwalls not greater than 2 feet in height shall include #5 stirrups spaced at 9 inches on center, and three #6 bars placed at the top and bottom of the headwall. Headwalls with a height greater than 2 feet must be designed.

Where warranted, headwalls shall have concrete traffic barriers mounted on top of them. Any barrier or guardrail attachments shall be designed in accordance with *Section 103.3.4.2.1 – Delaware Clear Zone Concept*.

107.7.5.2 *Wingwalls*

Wingwalls are typically precast construction, but can be cast-in-place in some cases. If precast wingwalls are specified, they must be designed to be self-supporting, not relying on the connection to the culvert for stability; however, positive connection to the culvert must be provided. For retaining wall design criteria, see *Section 107.6.2 – Reinforced-Concrete Cantilevered Walls*. Also refer to *Section 107.4.1.5 – Abutment, Backwall, and Wingwall Details*.

Wingwalls are called “flared” when the axis of the wingwall forms an angle with the centerline of the box. “Straight” wingwalls are an extension or continuation of the box walls. Wingwalls constructed in a line parallel to the roadway are commonly used to minimize right-of-way acquisition. Flared wingwalls shall be used where practical on the entrance ends of culverts for hydraulic reasons. Straight wingwalls may be specified when hydraulics and any additional costs are adequately considered.

The layout of the culvert and wingwalls shall be in accordance with *Section 102.1.3.3 – Lay-Out Plan*.

107.7.5.3 *Cutoff Walls*

Cutoff or toe walls shall be installed along the entrance and exit end-bottom sides of all reinforced-concrete box culverts when conditions dictate, as directed in HEC-14, *Hydraulic Design of Energy Dissipators for Culverts and Channels* (2006). All structural plate pipe with full inverts shall have cutoff walls. Culverts without headwalls and cutoff walls used to drain ponds shall be fitted with anti-seep collars.

When required, cutoff walls shall be embedded a minimum of 3.5 feet below the streambed. In the case where the wingwall footings are deeper than the minimum embedment of the cutoff wall, the cutoff wall should be designed to meet the bottom of the wingwall footings.

107.7.5.4 *Scour Aprons*

Scour aprons are constructed of R-4 or larger riprap at both the inlet and outlet ends of the culvert. The riprap placement is designed in accordance with HEC-14. Riprap in the stream shall be covered with a minimum of 1 foot of natural streambed material. Riprap on side slopes shall be topped with soil, seeded, and mulched.

107.7.5.5 *Guardrail Attachments*

Guardrail is typically designed to span box or frame culverts less than 18 feet wide without post support. For guardrail locations with an adequate depth of fill (typically a fill depth greater than 4 feet), posts should be driven as per standard guardrail installations. Where guardrail is used, the culvert shall be lengthened to account for dynamic deflection of the guardrail. For details, refer to DelDOT Standard Construction Details.

In cases where culverts are more than 18 feet wide and standard guardrail cannot be placed, a concrete parapet shall be constructed on top of the headwall. The standard guardrail-to-barrier connection should be used with concrete parapets in the clear zone. The designer shall refer to AASHTO's *Roadside Design Guide* for more information. Where possible, culverts should extend beyond the clear zone to eliminate the need for guardrail and parapets.

107.7.5.6 *Protective Sealing of Surfaces*

The exposed concrete faces of culverts and culvert wingwalls and headwall shall be protected by the application of a silicone sealer material. Specifications for this sealing material are available in the Standard Specifications.

The designer should include an illustrative detail with call-outs in the plans to describe the position, location, and area required to be sealed. Project notes, in the absence of a sketch, should not be used to describe the application of protective sealers, because there can be both description and interpretation problems.

107.8 Architectural Treatments

Architectural treatments are used to improve the aesthetics of bridges. Because of the extra cost, such treatments are warranted only at selected locations. Treatments include formliners, exposed aggregate, and vertical or horizontal rustication.

Formliners are used on structures such as overpasses where a large part of the structure is visible. Formliners simulating various textures and treatments are available. They have been used to simulate stone and brick and can be considered on a case-by-case basis. The treated surface can also be stained to further enhance the appearance of the structure. Formliners should be considered where large flat surfaces are available such as abutments, wingwalls and solid wall piers. Application of formliners on cap- and column-type piers frequently appears out-of-place and unappealing. In general, formliners typically provide architectural treatment at lower cost than other types of treatments.

When formliners are used, the designer must ensure that minimum cover requirements for reinforcing steel are met. The patterns and/or indents of the formliner can reduce the concrete cover over the reinforcing steel. Additional concrete cover and, in some cases, overall dimensional modifications may be required.

Vertical or horizontal rustications can also be considered to enhance the appearance of the substructure. Rustication grooves can be formed through the use of standard plywood forms. Similar to formliners, maintenance of minimum reinforcement steel concrete cover must be considered when using rustications.

107.9 Temporary Excavation Support Systems

Temporary excavation support is frequently required to ensure adequate support of adjacent roadways, structures, and facilities. Although the engineering design of temporary excavation support systems is the responsibility of the Contractor, the designer must delineate on the Contract Plans the approximate location and length of all temporary excavation support systems required to construct the project.

Design of temporary earth retaining structures shall be in agreement with Section A11 – Abutments, Piers, and Walls; and *Section 211 – Abutments, Piers, and Walls*. See also Section A3.0 – Loads and Loads Factors for applicable sections regarding earth pressure calculations.

107.10 References

AASHTO, 2014. *AASHTO LRFD Bridge Design Specifications*, 7th Edition.

DelDOT, n.d. *Standard Construction Details*.

FHWA, 1997. FHWA NHI-05-042 – *Design and Construction of Driven Pile Foundations.*

FHWA, 2005. FHWA NHI-05-039 – *Micropile Design and Construction Reference Manual*, December.

FHWA, 2007. FHWA-HIF-07-03 Geotechnical Engineering Circular No. 8 – *Design and Construction of Continuous Flight Auger Piles*, April.

FHWA, 2010. FHWA-NHI-10-016 – *Drilled Shafts: Construction Procedures and LRFD Design Methods Foundation Design*, May.

USS, 1984. *Sheet Piling Design Manual*.

This page intentionally left blank.

Section 108
Bridge Load Rating

108.1 Introduction

This section provides guidance in the development of bridge load ratings. Additional information on bridge inspection procedures and load ratings can be found in the DelDOT *Bridge Inspection Manual* (2011).

108.2 Application

The National Bridge Inspection Standards (NBIS) requires each state transportation department to inspect, prepare reports, and determine load ratings for structures defined as bridges on all public roads. The NBIS is contained in Title 23 of the Code of Federal Regulations (CFR) Part 650, Subpart C.

The Federal definition of a bridge per the NBIS is:

> a structure including supports erected over a depression or an obstruction, such as water, highway, or railway, and having a track or passageway for carrying traffic or other moving loads, and having an opening measured along the center of the roadway of more than 20 feet between undercopings of abutments or spring lines of arches, or extreme ends of openings for multiple boxes; it may also include multiple pipes, where the clear distance between openings is less than half of the smaller contiguous opening.

Only bridges that meet the Federal definition are included in the NBI.

In Delaware, Department policy defines all state-owned structures having an opening of greater than 20 square feet, with a minimum vertical clearance of 48 inches, as a bridge. In addition, any structure over a state-maintained roadway shall be considered a bridge, regardless of owner. These bridges are included in the State Bridge Inventory.

Department policy is to perform load ratings on all structures meeting either the Federal or state definition of a bridge. This Manual covers the general requirements and procedures for bridge load ratings. For structural types, materials, and analysis methods not dealt with in this Manual, contact the Bridge Management Section.

108.3 Terms

Bridge Management Engineer – The Bridge Management Engineer assists with the QA/QC process, provides training as needed, and is responsible for load-posting bridges.

Load Rating Engineer – The Load Rating Engineer is the individual charged with the overall responsibility for load rating bridges in Delaware for compliance with the NBIS.

Load Rater – The Load Rater is the individual, meeting the qualifications described herein, assigned to perform the load rating of a specific bridge.

108.4 Load Rating Specifications

In general, the Department adopts the load rating procedures in the AASHTO *Manual for Bridge Evaluation* (MBE; 2013). Load Raters should refer to that publication for any items not specifically covered by this Manual. Where there are differences between this Manual and the AASHTO LRFD, this Manual governs.

108.5 Load Rating Process

The load rating review and acceptance process shall be in accordance with Figure 108-1. In general, the load rating will be prepared by the Bridge Management Section. However, in the case of consultant-designed curved girder bridges, cable-stayed bridges, other complex bridges as designated by the Bridge Management Engineer, and/or projects containing multiple (three or more) bridges requiring load ratings, the consultant will be required to prepare the load rating, and submit the rating to the Bridge Management Engineer for review.

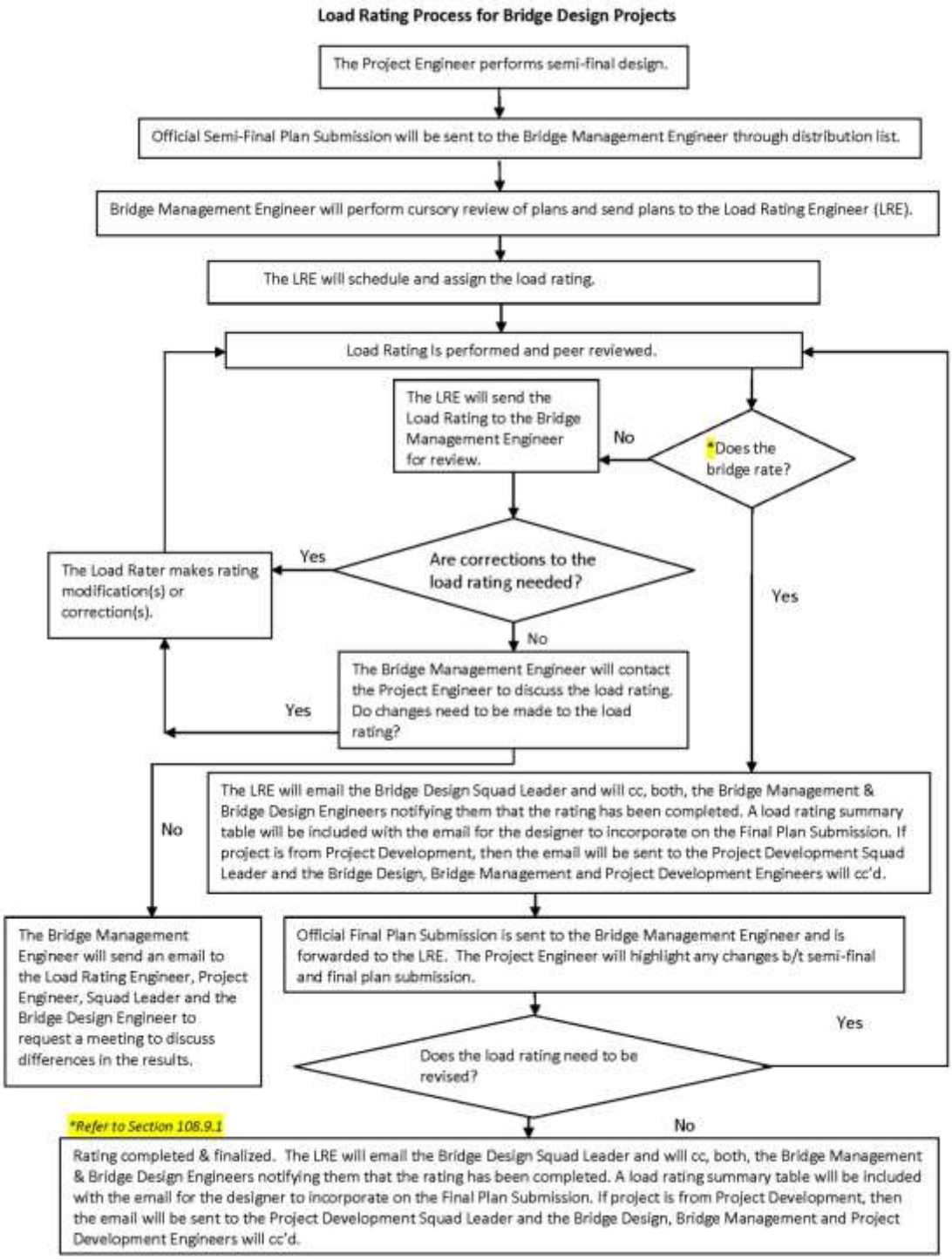

FIGURE 108-1. LOAD RATING PROCESS FOR BRIDGE DESIGN PROJECTS

Upon the successful completion of the load ratings, the Bridge Management Engineer will provide a Load Rating Summary Table for inclusion in the General Plan (see Figure 108-2).

Load Rating Summary

Vehicle Type	Rating Factor	Rating Weight (tons)	Controlling Member	Controlling Point	Load Effect
HL-93 Truck (Inventory)	1.14	N/A	Span 1: Interior Beam	110	Bearing
HL-93 Tandem (Inventory)	1.35	N/A	Span 1: Interior Beam	110	Bearing
HL-93 Truck Train (Inventory)	0.92	N/A	Span 2 & 3: Exterior Beam	110	Flexure
HS20 (Inventory)	1.39	50.12	Span 1: Interior Beam	110	Bearing
HL-93 Truck (Operating)	1.48	N/A	Span 1: Interior Beam	110	Bearing
HL-93 Tandem (Operating)	1.74	N/A	Span 1: Interior Beam	110	Bearing
HL-93 Truck Train (Operating)	1.19	N/A	Span 2 & 3: Exterior Beam	110	Flexure
HS20 (Operating)	1.80	64.97	Span 1: Interior Beam	110	Bearing
DE S220 & Legal-Lane	2.07	41.40	Span 2 & 3: Exterior Beam	110	Flange Stress
DE S335 & Legal-Lane	1.31	45.85	Span 2 & 3: Exterior Beam	110	Flange Stress
DE S437 & Legal-Lane	1.25	46.25	Span 2 & 3: Exterior Beam	110	Flange Stress
DE T330 & Legal-Lane	1.61	48.30	Span 2 & 3: Exterior Beam	110	Flange Stress
DE T435 & Legal-Lane	1.42	49.70	Span 2 & 3: Exterior Beam	110	Flange Stress
DE T540 & Legal-Lane	1.29	51.60	Span 2 & 3: Exterior Beam	110	Flange Stress

FIGURE 108-2. LOAD RATING SUMMARY TABLE

In the event that any structural changes occur between the Semi-Final Construction Plan and Final Construction Plan stages, the designer must notify the Bridge Management Engineer of these modifications so the bridge load rating can be re-evaluated. Similarly, any structural modification made during construction shall be communicated to the Bridge Management Engineer, along with corresponding shop or as-built drawings, so the bridge load rating can be re-evaluated.

108.6 Responsibility

Most bridges in Delaware are owned and operated by DelDOT. In Delaware, bridges that are not owned and operated by DelDOT are typically owned by cities, railroad companies, Delaware River and Bay Authority (DRBA), the DNREC, the USACE, or other private owners.

Inspection and rating of these bridges meeting Federal requirements are the responsibility of the owner, and must be conducted in accordance with the NBIS. Department policy is to perform load ratings for municipally and all state-owned bridges meeting Federal requirements. All owners are also encouraged to inspect and load-rate bridges that meet the state definition of a bridge.

Title 17, Chapter 5, Section 510 of the Delaware Code allows the Department to conduct investigations of the load-carrying capacity of certain bridges, regardless of ownership or jurisdiction.

Owners are responsible for sending their bridge inspection and load rating results to the Bridge Management Section, which then consolidates the results and forwards them to FHWA for inclusion in the NBI.

108.7 Quality Control Procedures

Maintaining a high degree of accuracy and consistency in the load rating program is important. The QC procedures described herein are intended to provide this level of quality.

108.7.1 Quality Control Roles and Responsibilities

All QC activities fall under the responsibility of the Load Rating Engineer. All personnel involved in the load-rating process shall meet the requirements of this Manual. All load-rating calculations shall be accompanied by the qualifications of the Load Rater for consideration and acceptance by the Load Rating Engineer.

108.7.2 Load Rating Engineer Qualifications

The Load Rating Engineer shall be a Delaware Licensed Professional Engineer. In addition, the Load Rating Engineer shall have experience in structural analysis and load-rating procedures of all common bridge structure types.

108.7.3 Load Rater Qualifications

All Load Raters shall possess a Bachelor's Degree or higher in Civil Engineering. Load Raters shall also have knowledge of structural analysis methods and/or structural design. Load Rater qualifications are checked during the Load Rating Engineer's review and validation of the load-rating documents.

108.7.4 Load Rating Reviewer Qualifications

The Load Rating Reviewer shall be a Delaware Licensed Professional Engineer. In addition, the Load Rating Reviewer shall have experience in structural analysis and load rating procedures of all common bridge structure types. Load Rating Reviewer Qualifications are checked during the Load Rating Engineer's review and validation of the load-rating documents.

108.7.5 Review and Validation of Load Rating Reports

The Load Rater shall perform a thorough review of the data and results of each load rating prior to submission to a reviewer. All load ratings shall be reviewed and approved by another Load Rater who meets the qualifications of this Manual, and possesses a Delaware Professional Engineer license.

Any load rating that results in a recommended bridge load restriction posting shall be reviewed and approved by the Bridge Management Engineer. Refer to *Section 108.10.8 – Load Restriction Posting* of this Manual.

108.7.6 Resolution of Data, Errors and Changes

The reviewer shall communicate to the Load Rater any errors in the data or issues with the methodology or results. The goal is to ensure that the methodology is appropriate for the structure being rated, and the data are accurate. Any discrepancies that cannot be resolved between the Load Rater and reviewer shall be brought to the attention of the Load Rating Engineer for resolution.

108.8 Quality Assurance Procedures

QA procedures consist of reviewing a sample of load-rating reports annually to verify the quality level of the load-rating program. The results of the load rating reviews will be summarized in an annual report.

108.8.1 Quality Assurance Roles and Responsibilities

All QA activities fall under the responsibility of the Bridge Management Engineer. The load-rating reviews will be performed with the assistance of the Load Rating Engineer.

108.8.2 Load Rating Quality Assurance Review Procedures

QA reviews shall be completed by the end of each calendar year. QA reviews shall consist of sampling, reviewing, validating, and reporting on the load ratings that have been performed in the current year.

108.8.2.1 *Sampling Parameters*

A representative sample of a minimum of 5 percent of the bridges that have been load rated in the current year shall be selected as part of the QA review. Consideration should be given in the selection process to load-posted bridges, deficient bridges, and bridges with unusual changes in the load ratings.

108.8.2.2 *Acceptance Criteria*

The following criteria shall be used in determining acceptability of a load-rating report:

1. Is the load-rating report complete?
2. Does the report format conform to this Manual?
3. Are the Load Rater and Load Rating Reviewer qualified?
4. Is the bridge modeled correctly?
5. Are the input data correct?
6. Has the bridge record been updated correctly?
7. Has the load restriction/removal been documented and distributed?

108.8.2.3 *Annual Report*

An annual report shall be prepared that contains the results of the Load Rating Quality Assurance process. The report shall include any recommendations for improvement of the load-rating process.

108.9 Load Rating Requirements

Load ratings are required to be completed before a new bridge is entered into the bridge inventory and opened to traffic, or when a bridge is rehabilitated. Load ratings are also required when a bridge inspection reveals deterioration and/or damage that is sufficient to

warrant a structural analysis to ascertain the impact to the strength and/or serviceability to an element of the bridge, or the entire bridge. At a minimum, load ratings shall be reviewed and updated at least every 10 years over the life of the bridge.

108.9.1 New Bridges

Department policy is to rate new bridges for current AASHTO and Delaware live load requirements. Department policy is to design all new bridges on state-maintained roads, so that load-rating factors are 1.0 or greater for the AASHTO HL-93 load, as well as all Delaware legal and permit loads. In addition, bridges must be designed to fulfill AASHTO design load requirements for LRFD. If a new bridge does not rate for the AASHTO HL-93 load, the Delaware legal and/or permit loads, the Project Manager shall submit a Design Exception. Design Exceptions are prepared according to *Section 102.5.4 – Design Exceptions and Design Variances*. A bridge that does not rate for the Delaware legal loads requires a load posting. This should be considered in the evaluation of the Design Exception.

108.9.2 Rehabilitated Bridges

Department policy is to rate bridges that are having structural rehabilitation work activities performed for current AASHTO LRFD design loads, as well as Delaware legal and permit load requirements. The designer shall consider addressing all existing structural deficiencies that will increase the load ratings to AASHTO LRFD design load requirements, strengthen the bridge, remove any load-posting restriction, or bring the bridge back to its original design capacity. On some rehabilitation projects, such as historical or temporary bridges, however, the scope of work may be limited, making it impractical to bring the bridge up to current AASHTO LRFD design-load requirements. and/or cause removal of the load-posting restriction. Similarly, on some bridge rehabilitation projects, it may not be feasible or cost effective to upgrade the capacity of the bridge to meet the AASHTO LRFD design-load requirements, or to result in removal of the load-posting restriction. In either of these situations, the bridge shall be designed to reinstate the bridge back to its original design capacity while trying to achieve rating factors as close to 1.0 as possible for all Delaware legal loads. If a rehabilitated bridge does not rate (i.e., rating factor < 1.0) for the AASHTO HL-93 load, the Delaware legal and/or permit loads, the Project Manager shall submit a Design Exception. Design Exceptions are prepared according to *Section 102.5.4 – Design Exceptions and Design Variances*. A rehabilitated bridge that does not rate for the Delaware legal loads will require a load posting. This should be considered in the evaluation of the Design Exception.

All inspection reports are filed and available for review by the Bridge Management Section. A special inspection can be scheduled with the Bridge Management Section if the structural deficiencies are not documented in sufficient detail in previous reports.

108.9.3 During Construction

The Standard Specifications require the contractor to submit the proposed loadings (axle spacing, axial loads, stockpiling, and equipment locations), including quantity and type of construction equipment and vehicles it proposes to use, to the Engineer for approval. All primary members, including connections, are to be analyzed for anticipated construction loads. All stresses for existing and proposed members shall be within allowable ranges for strength, service, and fatigue, as directed by the AASHTO LRFD.

108.9.4 Bridge Inspections

By law, all bridges on the NBI are required to be inspected at least every 2 years. All bridges that do not meet the Federal definition of a bridge, but do meet the state definition of a bridge, are required to be inspected at least every 4 years. Inspection frequencies are determined by the structure type, condition, and load-posting restrictions. Bridges in poor structural condition require more frequent inspections. Refer to *Bridge Inspection Manual* for inspection frequency requirements. Inspection of bridges is done in conformance with the MBE, FHWA's *Specification for the National Bridge Inventory* (2014), DelDOT's *Bridge Inspection Manual*, and the *AASHTO Bridge Element Inspection Manual* (2010). Some structures require more detailed and different types of inspections to determine their actual condition.

Bridges are not typically load rated as a part of their routine inspections. However, load ratings of bridges during inspections are usually prompted by discovery of significant loss of section, continuing deterioration, and suspected loss of capacity. Actual measurements taken by the inspection team that differ from that of the plans shall be used to update the load rating. Areas of deterioration are given special attention during field inspection, because a primary member that is reduced in section may control the capacity of the structure. If deterioration is identified during the field inspection, the inspection team shall produce detailed sketches documenting the deficiencies found, so that the load rating can be re-evaluated to determine if the load-carrying capacity has been compromised.

The Bridge Management Section maintains a file for each bridge, which includes bridge inventory and condition data, sketches, load-rating summaries, maintenance records, and Contract Plans. This information indicates the current condition of the bridge, which can then be used in load-rating calculations of the structural elements.

108.9.5 Load Rating Timeline

All load ratings shall be performed within the timeframes defined below.

108.9.5.1 *New Bridge and Rehabilitated Bridges*

New bridges and rehabilitated bridges are first rated after distribution of the Semi-Final Construction Plans. If a consultant has been assigned the load rating, then they shall submit the load rating to the Bridge Management Engineer at the Semi-Final Construction Plan Submission for review and approval. Any issues arising from this rating shall be conveyed to the designer, and addressed prior to the distribution of Final Construction Plans.

Final load ratings shall be submitted to the Bridge Management Engineer prior to the PS&E submission for the project. A Load Rating Summary Table, provided by the Load Rating Engineer and indicating the successful completion of the load rating, shall be included in the General Plan in accordance with *Section 108.10.6 – Load Rating Report*.

Any modification to the bridge, either through shop drawings or field changes, shall be incorporated into the load ratings. Modified load ratings shall be submitted to the Bridge Management Section prior to the completion of the project.

108.9.5.2 *Load Ratings Based on Bridge Inspections*

Load ratings that are performed as a result of bridge inspection findings shall be completed within 2 weeks of the inspection date. Refer to the DelDOT *Bridge Inspection Manual* for the complete timeline for inspection related activities.

108.9.5.3 *Periodic Load Rating Review*

Load ratings shall be reviewed and updated at least every 10 years over the life of the bridge.

108.9.6 Rated Members

Department policy is to rate only the primary load-carrying members in a bridge. This is normally the slabs of slab bridges, girders, trusses, floor beams, stringers, spandrel columns, or arch ring. Concrete box culverts and frames are also rated. The Load Rater must apply engineering judgment to evaluate other elements of a structure, which should be considered primary elements, and included in the load-rating calculation (i.e., cross frames of a curved girder or skewed structure).

Gusseted and/or pinned connections of non-load-path redundant steel-truss bridges shall be evaluated during the bridge load-rating analysis. The evaluation of gusset connections shall include the evaluation of the connecting plates and fasteners.

Not typically included in the load rating are the deck slab, piers, abutments, and foundations. The condition of these elements shall be considered, and they shall be assumed to safely carry the loads transmitted to them, unless there is evidence of serious deterioration. Main elements and components of the substructure (such as fracture-critical steel pier caps, cross beams, or hammerhead piers) whose failure is expected to cause collapse of the bridge shall be identified for special emphasis during inspection. Refer to the MBE for guidance in load-rating substructure elements.

108.10 Load Rating Procedures

This section addresses the standard load-rating procedures adopted by the Department. These procedures include analytical steps, assumptions, methods, tools, loads, factors, and documentation.

108.10.1 Analytical Steps in Load Rating

Analytical steps in load rating are detailed procedures that a Load Rater goes through in performing a load-rating analysis.

The analytical steps required to rate any member is independent of the role played by the member in the overall structure. The analytical steps may vary depending on the choice of method. The following analytical steps are required:

1. Determine section properties
2. Determine material properties (e.g., yield strength, compressive strength)
3. Calculate section capacities
4. Calculate dead-load effects

5. Calculate live-load distribution
6. Calculate live-load effect
7. Calculate rating factors.

The loads and factors used to analyze critical members and determine the appropriate ratings are outlined in the MBE and the AASHTO LRFD.

108.10.2 Information Gathering

Prior to rating an existing bridge, the engineer must gather all available data pertinent to the structure. This step will aid in the development of member section properties, allowable and/or yield stress, and dead-load effects. For a bridge rehabilitation project, this may require the designer to perform a special inspection of the structure or, at minimum, review results of a recent detailed inspection.

When conditions warrant, reduced sections should be used to obtain a load rating that best reflects the known condition and capacity of the structure. Areas of deterioration must be given special attention during field inspection, because a primary member that is reduced in section may control the capacity of the structure.

The Load Rater also needs a complete description of the bridge, as-built plans, any modifications since it was built, and its present condition. In lieu of plans, a detailed set of measurements and/or sketches from actual field measurements will be needed. The Bridge Management Section maintains a file of past inspection results for each bridge, along with maintenance records, contract plans, and other relevant information. This information indicates the current condition of the bridge, which can then be used in load-rating calculations of the structural elements.

108.10.2.1 *Material Properties*

Load Raters must make assumptions to efficiently analyze existing bridges. This is due to the wide variety of structural materials available (e.g., steel, concrete, wrought iron, timber, masonry, a combination thereof), assortment of structural types, and variations in quality and strength of the materials. Information concerning material properties may be obtained from contract plans, material testing, or guidelines found in the MBE. For new structures, standard design criteria presented in this Manual shall be used.

For a bridge rehabilitation project, information can be obtained from historical documentation such as as-built contract drawings or historical material properties prescribed in the MBE. In some cases, material testing, as outlined in *Section 109.2 – Material Testing*, can be performed to determine appropriate material properties.

108.10.3 Load Rating Methods

There are various load-rating methods that are based on the design methods presented in different AASHTO bridge publications. The Department's standard method for all load ratings is the Load and Resistance Factor Rating (LRFR) Method. Diagnostic Load Testing may be used in conjunction with the LRFR method. In certain situations, other methods of load rating may be considered. These include Load Factor and Allowable Stress Methods. These methods shall only be used with the approval of the Load Rating Engineer.

108.10.3.1 *Load and Resistance Factor Rating Method*

The LRFR Method provides a methodology for load rating a bridge consistent with the LRFD philosophy of the AASHTO LRFD. This method uses load and resistance factors that have been calibrated based on structural reliability theory to achieve a minimum target reliability for the strength limit state.

Guidance is provided on service limit states that are applicable to bridge load rating. This guidance is not based on reliability theory, but is based on past practice. The LRFR method is preferred because it recognizes a balance between safety and economics. The LRFR method is appropriate regardless of the original criteria and method used in the design of the bridge.

108.10.3.2 *Diagnostic Load Testing*

Diagnostic load testing may be used in special cases such as the following:

1. When analytical results provide a rating factor less than 1, but the bridge is otherwise showing no visual signs of distress.
2. When record construction plans for the bridge are not available or do not have sufficient detailed information.
3. When calibrating load rating data for such factors as distribution, fixity, and composite action.

The Department typically performs diagnostic load testing by driving a truck of known axle weights over a bridge. Strains are then measured in the load-carrying members with strain gages and specially designed data analysis equipment. Stresses are computed using the measured strains and material properties. These axle weights and computed stresses are used to calibrate the structural analysis model. A more realistic rating of the bridge can then be obtained for all loads. Further guidance for load testing is given in the MBE.

108.10.3.3 *Pipe Culverts*

LRFR ratings for pipe culverts that are in new or good condition may be based on the pipe manufacturer's documentation of the design capacity, provided that the following documentation is available. Sufficient documentation shall be included to confirm that the pipe culvert has been designed for the HL-93 Design Load, and as-built conditions are within the manufacturer's recommendations (i.e., cover requirements, backfill requirements). If the pipe culvert does not meet all of the above criteria, an LRFR rating shall be performed for the pipe culvert, based on the design requirements of the AASHTO LRFD. The loads and factors shall be computed in accordance with the AASHTO LRFD.

Steel corrugated pipe culverts shall be load-rated using the method described in Design Data Sheet 19 of the National Corrugated Steel Pipe Association (NCSPA). Because of the difficulty in measuring deterioration in corrugated metal pipe culverts, and the resulting strength loss, the Department has created a Corrugated Metal Pipe Inspection Policy. This policy determines when the load rating should be reduced, based on the level of deterioration found during the inspection. The policy can be found in DelDOT's *Bridge Inspection Manual*.

108.10.3.4 *Other Methods*

Other methods of load rating include all design methods contained in previous AASHTO bridge design specifications, such as Allowable Stress Method or Load Factor Method. These methods shall not be used to perform load ratings, regardless of the method used to design the bridge, without the approval of the Load Rating Engineer.

108.10.4 Structural Analysis and Tools

Several computer programs are available for structural analysis of bridges. Wyoming Department of Transportation's BRASS-GIRDER (LRFD)™ computer program, herein referred to as BRASS, is the standard program used by the Department to rate bridges. BRASS shall be used for steel and concrete girder, rigid-frame, and slab-type bridges. For other material or structure types that cannot be analyzed with BRASS, one of several finite-element programs may be used to perform the structural analysis. Bentley's STAAD.Pro® is preferred by the Department. Other structural analysis programs may be used with the approval of the Load Rating Engineer. These analysis programs are used in conjunction with hand calculations and/or spreadsheet-based calculations to complete the load rating, in accordance with this Manual. The Load Rater shall clearly understand the basic assumptions of the program and the methodology that is implemented. Sufficient documentation shall be provided to allow verification of the results.

108.10.4.1 *Structural Analysis Requirements*

Structural analysis and load ratings are prepared for each typical load-carrying member of each structure unit. A structure unit consists of a simple span or a series of continuous spans. At a minimum, an interior and an exterior girder shall be rated for each structure unit. Duplicate load ratings are not required for identical structure units. Engineering judgment may be used to eliminate the need to rate similar structure units.

108.10.4.2 *BRASS Data Set Standards*

In general, the BRASS commands should follow the order of commands as presented in the BRASS Manual. It is helpful to include spaces in the data file to improve readability.

Comment commands must be included in the data set, and include any and all assumptions or deviations from standard practice made by the Engineer. This will assist reviewers in understanding how the BRASS data were obtained.

Administration commands shall be the first commands in the data set. These commands include the AGENCY, ENGINEER, BRIDGE-NAME, and TITLE commands. They shall contain standard information, including the load-rating agency, Load Rater, bridge number, bridge location information, bridge type, span number, beam designation, and contract numbers.

The Load Rater should pay attention to the default values for each command parameter.

If the default value is acceptable, the value may be omitted from the data file.

File names shall consist of:

For single span: C-Num_girder designation.DAT

For multiple span: C-NUM_#_girder designation.dat

where:

- C = County Code (1, 2, or 3 for New Castle, Kent, and Sussex Counties, respectively)
- NUM = Three-digit bridge number (add a fourth digit suffix to bridge number if required)
- # = Span number(s)
- Girder designation = description of girder rated

The girder designation may be "int" or "ext" for typical interior or exterior girders. Girder numbers may be used to designate a specific girder. The girder number shall match the construction plans.

Examples: 1-123_s1_int.dat
1-123_s1_g3.dat
1-123_ext.dat
1-123A_s2-s4_int.dat

Do not use spaces or special characters in the data file name.

108.10.5 General Load Rating Equation

The following general expression shall be used in determining the load rating of each component and connection for each force effect (i.e., axial force, flexure, or shear):

$$RF = \frac{C - (\gamma_{DC})(DC) - (\gamma_{DW})(DW)}{(\gamma_{LL})(LL + IM)}$$

For Strength Limit States:

$$C = \varphi_c \varphi_s \varphi R_n$$

Where the following lower limit shall apply:

$$\varphi_c \varphi_s \geq 0.85$$

For Service Limit States:

$$C = f_R$$

Where:

RF = Rating factor

C = Capacity

f_R= Allowable stress specified in the LRFD code

R_n = Nominal member resistance (as inspected)

DC = Dead load effect due to structural components and attachments

DW = Dead load effect due to wearing surface and utilities

LL = Live load effect

IM = Dynamic load allowance

γ_{DC} = LRFD load factor for structural components and attachments

γ_{DW} = LRFD load factor for wearing surface and utilities

γ_{LL} = Evaluation live load factor

φ_c = Condition factor

φ_s = System factor

φ = LRFD resistance factor

The load rating shall be carried out at each applicable limit state and load effect, with the lowest value determining the controlling rating factor. Refer to the MBE for additional guidance concerning loads and load effects.

108.10.5.1 *Limit States, Load Effects, and Load Factors*

Strength is the primary limit state for load rating. Service limit states shall be checked for design, legal, and permit loads in accordance with the provisions of the MBE, including those listed as optional checks. It is not necessary to check the fatigue limit state for steel bridges, unless prompted by inspection findings. The Load Rating Engineer shall be responsible for determining the need to check the fatigue limit state.

Members shall be evaluated for axial force, flexure, and shear, as appropriate. Shear shall be evaluated for all concrete structures. When using the Modified Compression Field Theory (MCFT) for the evaluation of concrete shear resistance, the longitudinal reinforcement shall be checked for the increased tension caused by shear.

Load factors for design, legal, and permit loads are defined in the MBE. The MBE provides generalized live load factors for load rating that are appropriate for use with DelDOT's standard Legal Loads. Permit load factors for Routine or Annual Permit Types shall be used for DelDOT's standard Permit Loads.

108.10.5.2 *Condition Factor*

The condition factor provides a reduction to account for the increased uncertainty in the resistance of deteriorated members and the likely increased future deterioration of these members during the period between inspection cycles. The condition factors provided in the MBE shall be applied, based on the most recent superstructure or culvert condition rating. Improved inspections will reduce, but not totally eliminate, the increased resistance variability in deteriorated members. When section properties are obtained accurately, the condition factor may be increased by 0.05, not to exceed 1.0, in accordance with the MBE.

108.10.5.3 *System Factor*

System factors are multipliers applied to the nominal resistance to reflect the level of redundancy of the complete superstructure system. Bridges that are less redundant will have their factored member capacity reduced; and accordingly, will have lower ratings. Subsystems that have redundant members shall not be penalized if the overall system is nonredundant. Therefore, closely spaced parallel stringers would be redundant even in a two-girder bridge with closely spaced multiple floor beams and stringers. System factors shall only be applied when checking flexural and axial effects at the strength limit state. It is Department policy to apply the system factors given in the MBE, and not those found in the AASHTO LRFD.

108.10.5.4 *Resistance Factors*

Resistance factors shall be applied to the strength limit state as specified in the AASHTO LRFD, based on material and load effect.

108.10.5.5 *Loads*

Only two types of loads are normally considered when load-rating a bridge: dead load and live load. Horizontal and vertical earth loads are also considered when load-rating a slab, rigid frame, or culvert.

108.10.5.5.1 Dead Loads

Dead loads include the weight of anything that is permanently attached to the bridge superstructure. In LRFR, these loads are separated into two types: structural components and attachments (DC); and wearing surface and utilities (DW). All dead loads should be based on dimensions shown in the plans and verified with field measurements, as needed. The presence of utilities and other attachments shall be verified prior to performing a load rating. Allowance for a future wearing surface shall be included in the load rating of dead loads, if so noted on the bridge plans.

108.10.5.5.2 Live Loads

As related to trucks, a bridge's capacity depends not only on the gross weight, but also on the number and spacing of the axles and the distribution of load between the axles. Load ratings shall be performed for Design, Legal, and Permit vehicles.

The Design Loads are the HL-93 Design Load per the AASHTO LRFD, and the HS20-44 per the AASHTO *Standard Specifications for Highway Bridges* (2002). The design loads shall include all axle configurations, tandems, truck trains, and lane loads associated with the respective vehicle. Design Load Ratings shall be performed at the inventory level and operating level for all design loads, in accordance with the MBE.

Pedestrian live load on sidewalks shall not be considered in the load rating of the bridge.

Because it is not practical to rate a bridge for the numerous legal axle configurations, Delaware's highway bridges are rated for six standard Legal Loads, which are representative of actual vehicles on the highways. DelDOT's standard Legal Loads are the S220, S335, S437, T330, T435, and T540 (see Figure 108-3). Critical load effects shall consider the Delaware Legal Loads, including truck, truck trains, and lane load combinations found in the MBE, as applicable. Legal Load Ratings shall be performed for all legal loads in accordance

with the MBE. The Type 3 Unit, Type 3S2 Unit, and the Type 3-3 Unit AAHTO Legal Loads, as depicted in the MBE, do not need to be considered in the load rating analysis, because the Delaware Legal Loads are more restrictive. An extensive sensitivity study was completed comparing the load ratings for the AASHTO Single-Unit Specialized Hauling Vehicles (SHVs) versus the Delaware Legal Loads for various span lengths. The AASHTO SHVs involve four single-unit trucks with 4, 5, 6, and 7 axles. The study showed that the SHVs seldom governed over that of the Delaware Legal Loads and when they did govern, the variance was less than 3 percent greater than Delaware Legal Loads. Therefore, the FHWA granted approval for the Department to not consider the SHVs when performing load rating analyses, unless the bridge is currently posted or if the analysis shows that the bridge needs to be posted for any of the Delaware Legal Loads.

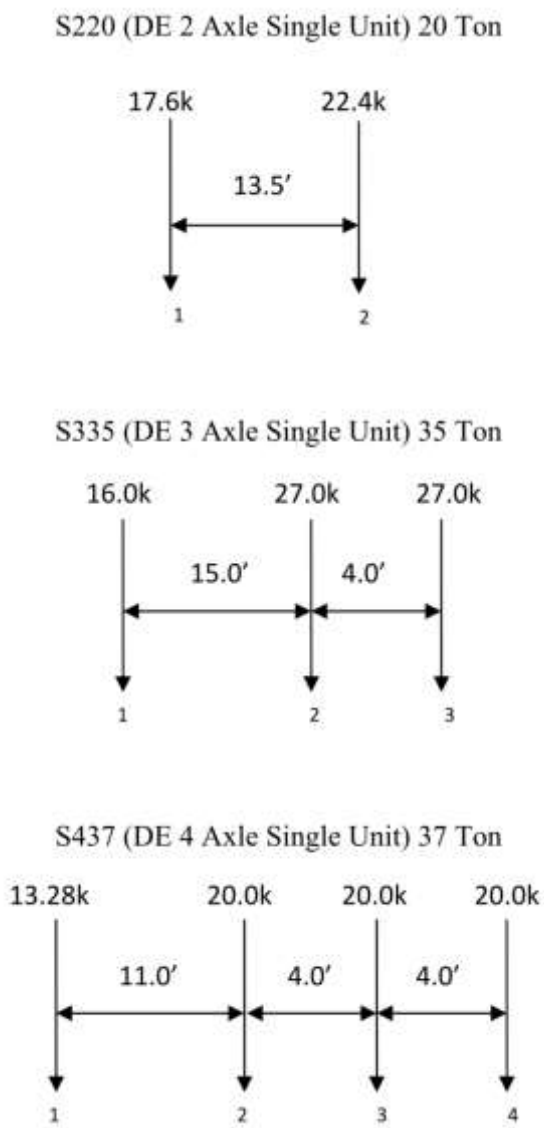

FIGURE 108-3. LEGAL LOAD AXLE LOADINGS AND SPACINGS

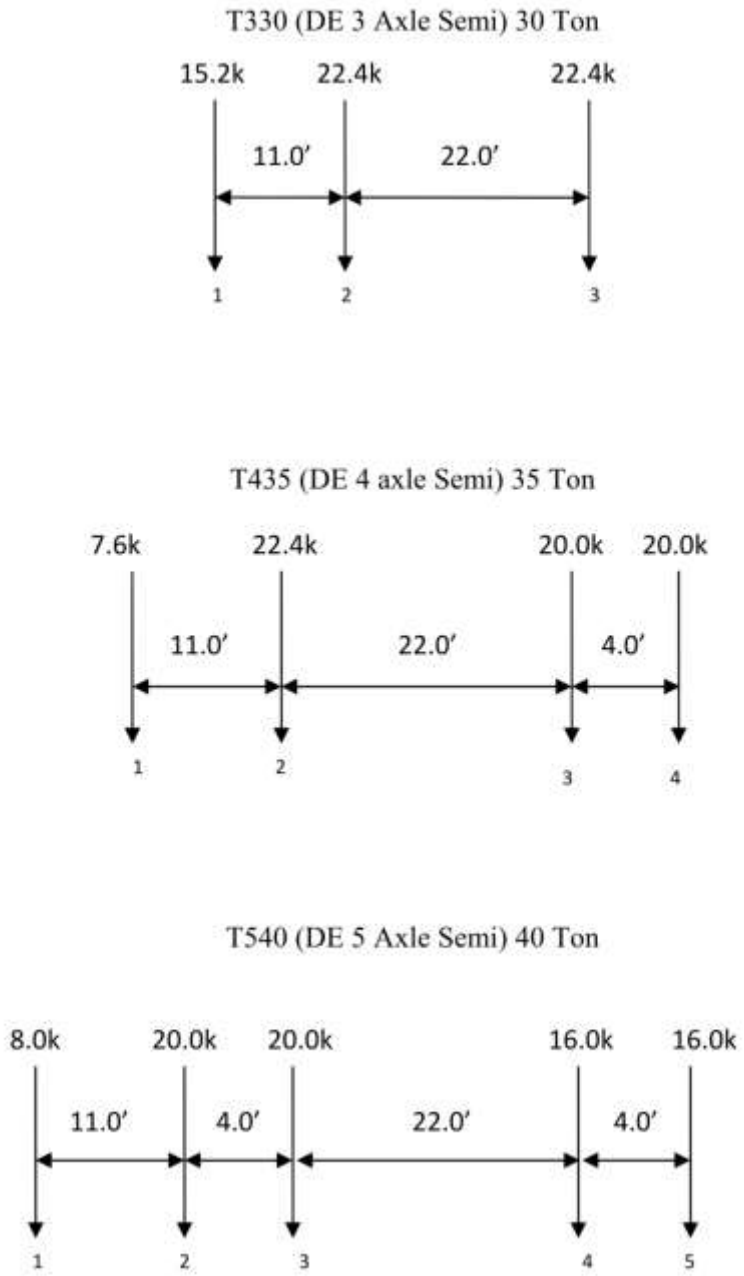

FIGURE 108-3. LEGAL LOAD AXLE LOADINGS AND SPACINGS

DelDOT's Overweight/Oversize Permit Program allows application for operation of vehicles that exceed the legal load limitations. Bridge Management Section reviews permit applications for Superloads, which are vehicles with gross vehicle weight exceeding 120,000 pounds, or with any individual axle weight exceeding 25,000 pounds. A Policy Directive has been implemented that allows for Oversize/Overweight Blanket Permits (Annual Crane Permit). These permits allow unrestricted movement of cranes that exceed the legal load limitations, but are not reviewed as Superloads. Standard Permit Loads have been developed to check the safety and serviceability of bridges as part of the rating process. Because it is not practical to rate a bridge for the countless permit axle configurations, Delaware's highway bridges are rated for four standard Permit Loads, which are representative of the allowable Blanket Permit vehicles. DelDOT's standard Permit Loads are AC2, AC3, AC4, and AC5 (see

Figure 108-4). Critical-load effects shall consider the Delaware Standard Permit Loads and the lane-load combinations found in the MBE. Permit Load Ratings shall be performed for all permit loads in accordance with the MBE.

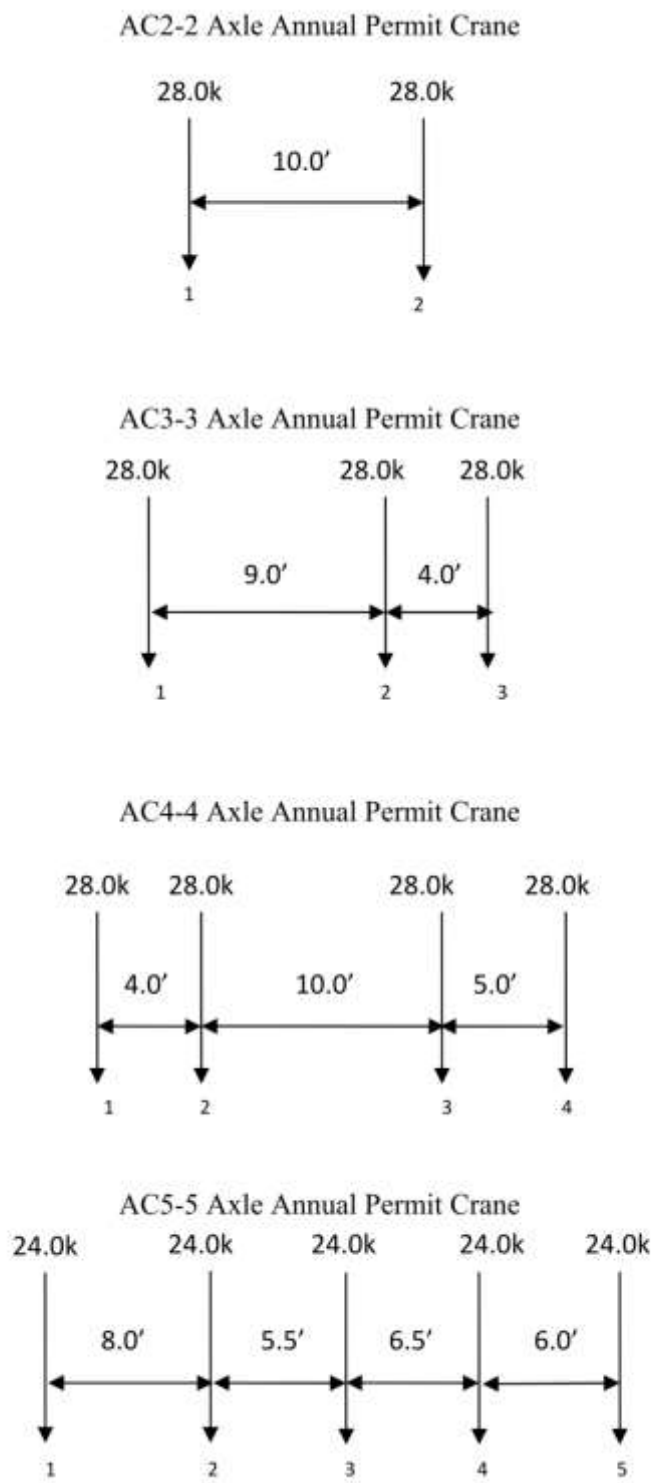

FIGURE 108-4. PERMIT LOAD VEHICLE AXLE LOADINGS AND SPACINGS

Additional Legal and/or Permit vehicles may be evaluated if deemed necessary by the Load Rater, the Load Rating Engineer, or the Bridge Management Engineer. These additional evaluations may include, but are not limited to, the Delaware Fire Truck and Bus Vehicles (see Figure 108-5 and Figure 108-6).

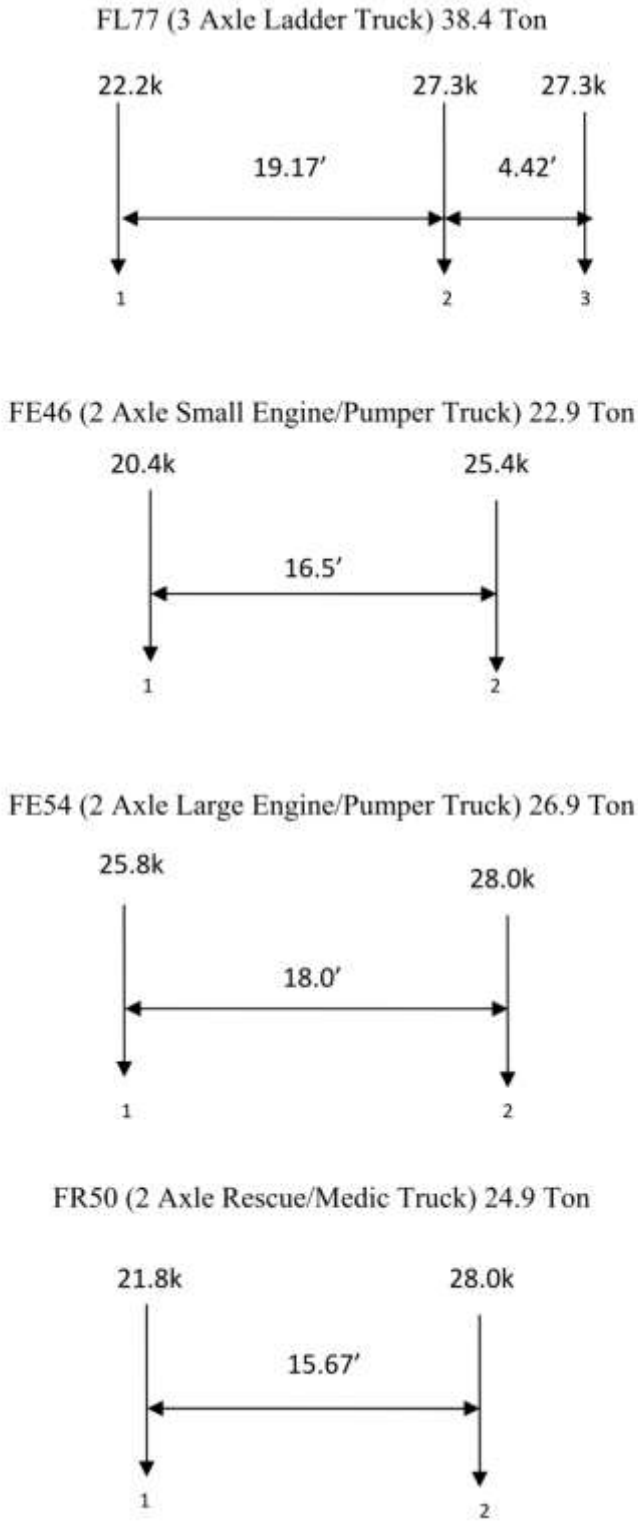

FIGURE 108-5. FIRE-TRUCK VEHICLE AXLE LOADINGS AND SPACINGS

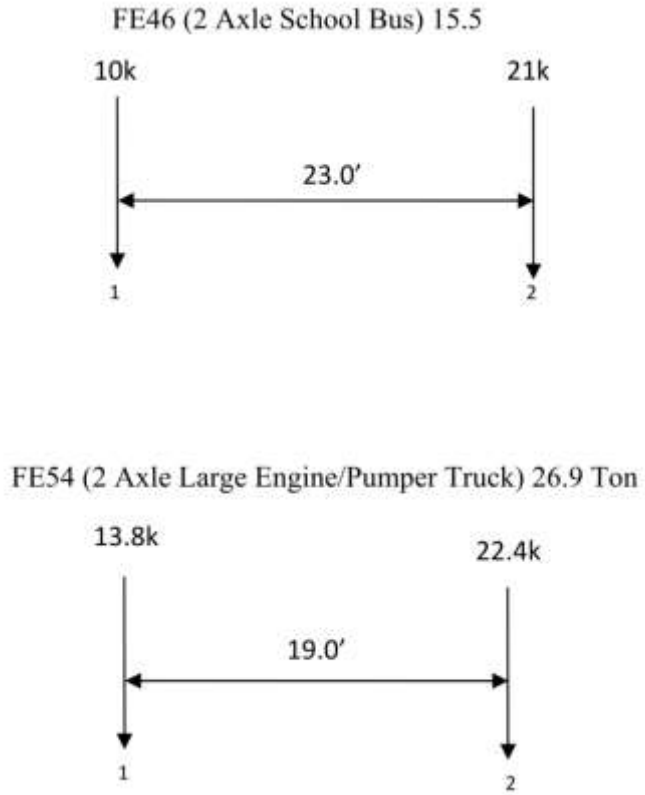

FIGURE 108-6. BUS VEHICLE AXLE LOADING AND SPACINGS

If the load-rating analysis for a bridge results in a load rating factor <1.0 for one of the Delaware legal loads, and the bridge is required to have a load-posting restriction, then the AASHTO SHVs, fire truck, and bus loads shall be checked to determine what affect the posting restriction has on those vehicles. If a particular fire department's truck or local bus loads and/or axle spacings differ from the trucks identified in Figure 108-5 and Figure 108-6, then those axle loads and spacings may be used for analysis upon approval of the Load Rating Engineer.

108.10.5.5.3 Dynamic Load Allowance

The dynamic load allowance specified in the AASHTO LRFD shall be applied to the rating. The dynamic load allowance shall be modified for structures under fill or wood components, as specified in the AASHTO LRFD. The dynamic load allowance shall not be applied to lane loads.

The dynamic load allowance specified for design loads deliberately reflects conservative conditions that may prevail under certain distressed approach and bridge deck conditions with bumps, sags, or other major surface deviations and discontinuities. In longitudinal members having spans greater than 40 feet with less severe approach and deck surface conditions, the dynamic load allowance may be decreased for legal and permit ratings, in accordance with the MBE. The Load Rater shall only apply the reductions after a field review of the approach and deck surface conditions.

In some cases, dynamic load allowance may be modified, based on the results of load-testing performed in accordance with *Section 108.10.3.2 – Diagnostic Load Testing*.

108.10.5.5.4 Load Distribution

Live load distribution shall be as per the AASHTO LRFD. Bridges for which accurate live load distribution formulas are not readily available may be analyzed by refined methods of analysis, as per the AASHTO LRFD. In some cases, load distribution may be modified based on the results of load testing done in accordance with *Section 108.10.3.2 – Diagnostic Load Testing,* and the MBE.

108.10.6 Load Rating Report

When ratings are performed, a Load Rating Report shall be submitted to the Load Rating Engineer. The Load Rating Report shall include the following:

1. Electronic copy of the Load Rating Summary Form, including material properties (documented, assumed, and/or measured), structural analysis and loading assumptions, file names, posting requirements, load rating comments, load rating date, and signatures of rater and reviewer (see Figure 108-7).
2. Electronic copy of the Rating Factor Summary Form, including identification of controlling output file and the rating factors for all design, legal, and permit loads (see Figure 108-8).
3. Electronic copy of the Posting Weight Summary Form, including the identification of the controlling output file and the Posting Weights for the legal loads (see Figure 108-9).
4. Electronic copies of data file(s).
5. Electronic copies of output summary file(s) for all design, legal, and permit load ratings.
6. Electronic copy of the Permit Analysis Form (see Figure 108-10).
7. Plans or sketches showing all properties and assumptions, as necessary.
8. Documentation of structural model used in analysis, if other than BRASS, where appropriate.

Delaware Bridge Load Rating Summary Form

Bridge Number:	3504 113
Structure Information:	
Structure Type (e.g., Rigid Frame, etc.)	2-span slabs & rigid frames
Structure Material Properties (e.g., Steel Yield Strength, Concrete breaking strength, etc.)	varied, see data files
Source of Structure Information:	
Design Contract numbers and date	844 & 6503004
Others (e.g. AASHTO manual, field data report, etc.)	
Load Rating Methods and Assumptions:	LRFR
Analysis and Modeling Assumptions	modeled as a 2-span slabs & rigid frames
Rating Method (e.g. Hand calculation, Software used, etc.)	BRASS Girder
Load Rating Results:	
Load Rating Input File Names[1]:	3-504_contr_844_int.dat,
	3-504_contr_6503004_int.dat
Load Rating Output File Names:	3-504_contr_844_int.out,
	3-504_contr_6503004_int.out
Critical Element Output File Name:	3-508_contr_844_int.out
Others (e.g. Load rating report, Contr. #) [2]:	
Posting information:	
Posting Requirements:	See RF summary sheet
Posting Resolutions:	
Load Rating Company:	Delaware DOT
Load Rater:	
Load Rating Reviewer: (must be a P.E.)	
Load Rating Engineer:	
Load Rating Date:	6/21/2013
Comments:	

Note 1: Load rating input files should be fully documented including load rating assumptions, analysis model, load distribution, etc.
Note 2: If the load rating is performed by contractors, load rating reports should be fully documented including all assumptions, analysis model, load distribution, etc. duing load rating analysis.

FIGURE 108-7. LOAD RATING SUMMARY FORM

Rating Factor Summary Form

Bridge:	1830 024
Date:	8/20/2013

Design Vehicle	Weight (tons)	Rating Factor	Rating Weight (tons)	Controlling File
HL-93 Truck (Inventory)	36	1.14	N/A	1-830_SP1_int.OUT
HL-93 Tandem (Inventory)	25	1.35	N/A	1-830_SP1_int.OUT
HS20 (Inventory)	36	1.39	50.12	1-830_SP1_int.OUT
HL-93 Truck (Operating)	36	1.48	N/A	1-830_SP1_int.OUT
HL-93 Tandem (Operating)	25	1.74	N/A	1-830_SP1_int.OUT
HS20 (Operating)	36	1.80	64.97	1-830_SP1_int.OUT
Legal Vehicle	Weight (tons)	Rating Factor	Rating Weight (tons)	Controlling File
DE S22	20	2.07	41.40	1-830_SP2&3_G6.OUT
DE S335	35	0.85	29.75	1-830_SP2&3_G6.OUT
DE S437	37	0.94	34.78	1-830_SP2&3_G6.OUT
DE T330	30	1.61	48.30	1-830_SP2&3_G6.OUT
DE T435	35	1.42	49.70	1-830_SP2&3_G6.OUT
DE T540	40	1.29	51.60	1-830_SP2&3_G6.OUT
SU4	27	1.25	33.75	1-830_SP2&3_G6.OUT
SU5	31	1.19	36.89	1-830_SP2&3_G6.OUT
SU6	34.75	0.97	33.71	1-830_SP2&3_G6.OUT
SU7	38.75	0.95	36.81	1-830_SP2&3_G6.OUT
Emergency/Bus Vehicle	Weight (tons)	Rating Factor	Rating Weight (tons)	Controlling File
FL77	38.4	0.90	34.56	1-830_SP2&3_G6.OUT
FE46	20.4	1.00	20.40	1-830_SP2&3_G6.OUT
FE54	25.8	1.05	27.09	1-830_SP2&3_G6.OUT
FR50	21.8	1.12	24.42	1-830_SP2&3_G6.OUT
B216	15.5	1.72	26.66	1-830_SP2&3_G6.OUT
B218	18.1	1.57	28.42	1-830_SP2&3_G6.OUT
Permit Vehicle	Weight (tons)	Rating Factor	Rating Weight (tons)	Controlling File
AC2	28	2.13	59.64	1-830_SP1_int.OUT
AC3	42	1.44	60.48	1-830_SP1_int.OUT
AC4	56	1.17	65.52	1-830_SP1_int.OUT
AC5	60	1.18	70.80	1-830_SP1_int.OUT

Rating & Posting Weights for legal loads are based on MBE (2nd Edition, 2011 w/ 2013 Interim revisions).	
Rating factors for AC2 through AC5 trucks are for Bridge Management use/reference only.	
	= Fields that are to be entered by the Load Rater
	= Field that is to be enetered by the Load Rater. What is being entered is the controlling HL93 load configuration. This is to account for bridge configurations that require additional HL93 load configurations be evaluated for. As an example, the load rating for a two-span continuous bridge less than 200' in length would include, both, the HL93 truck & lane load and the HL93 truck & Truck Train & Lane load. If the controlling load was the HL93 truck & truck train & lane load, then the Load Rater would enter "HL-93-TRKTRA Inv" instead of the "HL-93 Truck Inv".

FIGURE 108-8. RATING FACTOR SUMMARY FORM

Posting Weight Summary Form

Bridge	1830 024
Date	8/20/2013

Legal Vehicle	Weight (tons)	Rating Factor	Posting Weight (tons)	Controlling File
DE S22	20	2.07	**N/A**	1-830_SP2&3_G6.OUT
DE S335	35	0.85	**27.50**	1-830_SP2&3_G6.OUT
DE S437	37	0.94	**33.83**	1-830_SP2&3_G6.OUT
DE T330	30	1.61	**N/A**	1-830_SP2&3_G6.OUT
DE T435	35	1.42	**N/A**	1-830_SP2&3_G6.OUT
DE T540	40	1.29	**N/A**	1-830_SP2&3_G6.OUT
SU4	27	1.25	**N/A**	1-830_SP2&3_G6.OUT
SU5	31	1.19	**N/A**	1-830_SP2&3_G6.OUT
SU6	34.75	0.97	**38.29**	1-830_SP2&3_G6.OUT
SU7	38.75	0.95	**37.14**	1-830_SP2&3_G6.OUT

= Signifies Vehicles that the bridge needs to posted for

FIGURE 108-9. POSTING WEIGHT SUMMARY FORM

Permit Analysis Summary Form

Bridge Number	1487 001
Date	10/10/2013

Average Daily Traffic (ADT)	12395
Percent Truck Traffic	10.18%
Average Daily Truck Traffic (ADTT)	1262

	Annual/Unlimited					
	100k	150k	AC4	AC5	Single Trip/Mix with Traffic	Single Trip/No Traffic
Live Load Factor (yL)	1.61	1.21	1.52	1.45	1.20	1.1

HS20 Operating Rating (tons)	38.44

				Single/Multi Lane	Single Lane			
	Vehicle	GVW (k)	HS20 Equivalency Factor	Unlimited Crossings	Single Trip/Mix with Traffic	Single Trip/No Traffic	Single Trip/Mix with Traffic/No Impact	Single Trip/No Traffic/No Impact
Permit Rating Factors	AC2	56	1.40	1.37	1.37	1.50	1.75	1.90
	AC3	84	1.84	0.91	0.92	1.00	1.17	1.28
	AC4	112	2.05	0.91	0.92	1.00	1.17	1.28
	AC5	120	1.87	1.11	1.11	1.21	1.42	1.54

Maximum HS20 Equivalency Factor					
Based on HS20 Operating Rating	Unlimited Crossings	Single Trip/Mix with Traffic	Single Trip/No Traffic	Single Trip/Mix with Traffic/No Impact	Single Trip/No Traffic/No Impact
1.07	1.75	1.76	1.84	1.97	2.04

FIGURE 108-10. PERMIT ANALYSIS SUMMARY FORM

All load ratings shall be reviewed and approved by a Delaware Licensed Professional Engineer meeting the Load Rater qualifications listed in this Manual. Upon submittal of the Load Rating Report, the Bridge Management Engineer updates the load rating data in the AASHTOWare Bridge Management System, and stores the Load Rating Report in the hard and electronic bridge files.

When ratings are performed in conjunction with the preparation of design drawings, the Load Rating Engineer will provide a Load Rating Summary Table for inclusion in the General Plan (see Figure 108-2).

108.10.7 Load Rating Examples

Illustrative LRFR load rating examples are given in the MBE. The Bridge Management Section maintains a collection of BRASS LRFD data files for completed load ratings of various structure types. The rater may contact the Bridge Management Section to obtain a sample data file. A BRASS-GIRDER (LRFD)™ data set is shown in Appendix 108-1.

108.10.8 Load Restriction Posting

Structural capacities and loadings are used to analyze the critical members to determine the appropriate load rating. This may lead to load restrictions of the bridge or identification of components that require rehabilitation or other modification to avoid posting of the bridge.

When a bridge is not able to safely carry the loads allowed by State statute, it is posted for its reduced capacity. It is the Department's policy to restrict loads on bridges when the legal load rating factor drops below 1 for any of the Delaware Legal Loads or the AASHTO Single-Unit Specialized Hauling Vehicles. The minimum posting is 3 tons. A bridge that is not capable of carrying a minimum gross live load of 3 tons shall be closed.

In addition to Department-owned bridges, Title 17, Chapter 5, Section 510 of the Delaware Code allows the Department to conduct investigations of the load-carrying capacity of certain bridges, regardless of ownership or jurisdiction. If DelDOT determines that a load-restriction posting is warranted for a bridge, the owner will be notified of the recommendation to restrict loads on the bridge. If the owner of the bridge fails to implement the recommended restriction, The Department will implement the load restriction in accordance with this Manual and the Delaware Code.

The safe posting load will typically be less than the load determined in the legal load rating. The following formula from the MBE will be used to determine the safe posting load for each vehicle type:

$$Safe\ Posting\ Load = \frac{W}{0.7}[(RF) - 0.3]$$

Where:

RF=Legal load rating factor

W=Weight of rating vehicle

Depending on the range of posting loads for a bridge, and the number of trucks being posted, the Bridge Management Engineer will implement a multi-vehicle posting or a gross vehicle

weight posting. The multi-vehicle posting requires the posting signs to have a silhouette of each type of truck being posted, and the safe posting load in tons for each truck type. The gross vehicle weight posting will be signed for a single weight limit in tons, which is applied to all truck types.

Corrugated metal pipe culverts may also require posting based on their inspected condition. The Department has created a Corrugated Metal Pipe Inspection Policy to determine when the safe posting load should be reduced, based on the level of deterioration found during the inspection. Corrugated metal pipe culverts are typically posted for 3 or 15 tons. The policy can be found in DelDOT's *Bridge Inspection Manual*.

Other factors such as the character of traffic, the likelihood of overweight vehicles, and enforcement levels may lead to safe posting loads that are higher or lower than those determined above. The safe posting load is recommended by the Bridge Management Engineer, and approved by the Chief Engineer.

The Bridge Management Engineer implements load restrictions by preparing a "Load Restriction Resolution," which is signed by the Chief Engineer. A sample Load Restriction Resolution is included in Appendix 108-2. The Bridge Management Engineer then distributes the signed resolution to DelDOT's Chief Traffic Engineer, and copies the proper authorities, including DelDOT Traffic Section, State Police, school transportation directors, DelDOT Public Relations, DelDOT Maintenance, DelDOT Transportation Management Center, and Delaware Motor Transport Association. DelDOT Signs and Markings Section is also copied on the distribution of the Load Restriction Resolution to trigger placement of the load-posting signs. Upon completion of replacement or rehabilitation of a posted structure, the Bridge Management Engineer prepares a "Removal of Load Restriction Resolution," signed by the Chief Engineer and distributed as above.

Upon distribution of a load-posting resolution, DelDOT Signs and Markings will install regulatory signing in accordance with the FHWA *Manual on Uniform Traffic Control Devices* (2009). Bridge Management Section will confirm that the proper signs have been installed within 30 days of the distribution of the load-posting documents. Any necessary correction to the signage will be communicated to DelDOT Signs and Markings for correction. Refer to the DelDOT *Bridge Inspection Manual* for the complete timeline for inspection related activities.

108.11 References

AASHTO, 2002. *Standard Specifications for Highway Bridges*, 17th Edition.

AASHTO, 2010. *AASHTO Bridge Element Inspection Manual*, 1st Edition.

AASHTO, 2013. *Manual for Bridge Evaluation*, 2nd Edition with 2012 and 2013 Interim Revisions.

AASHTO, 2014. *AASHTO LRFD Bridge Design Specifications*, 7th Edition.

DelDOT, 2015. *Standard Specifications for Road and Bridge Construction*, December.

DelDOT, 2011. *Bridge Inspection Manual*. December 2011.

FHWA, 2009. *Manual on Uniform Traffic Control Devices*, with Revisions 1 and 2 dated May 2012.

FHWA, 2014. *Specification for the National Bridge Inventory Bridge Elements*, January 21.

Appendix 108-1 – Sample Brass-LRFD Data File

```
AGENCY Delaware Department of Transportation
ENGINEER Craig Kursinsky
BRIDGE-NAME 2917N150, SR-1 over SR-1 interchange
TITLE 2917N150, Single span steel girder with composite deck
TITLE Contract 89-110-04, Interior Girder

ANALYSIS B,3,RAT
POINT-OF-INTEREST T,Y,Y

DIST-CONTROL-GIRDER 4
DIST-CONTROL-DL TA,UD,UD
DIST-CONTROL-LL a1,,11.78
DIST-LANE-GEOMETRY 12.0

MAP-SPEC-CHECK ST,1,D,SHR,Y
MAP-SPEC-CHECK ST,2,D,SHR,Y
MAP-SPEC-CHECK ST,1,L,SHR,Y
MAP-SPEC-CHECK ST,2,L,SHR,Y

OUTPUT 2,YES

DECK-GEOMETRY 8,102,8.50,33.25,33.25,0.50
SOFFIT-INTERIOR 2.50,7.50,7.50
SOFFIT-LT-EXT -.3125,7.50,33.25,2.50,7.50,7.50
SOFFIT-RT-EXT 2.50,7.50,7.50,-.3125,7.50,33.25
DECK-MATL-PROPERTIES ,,.000

DECK-LOAD-DESCR 1,DC,2,Bridge Railing
DECK-LOAD-LINE 1,.030,8
DECK-LOAD-LINE 1,.030,772.5

DECK-LOAD-DESCR 2,DC,1,SIP Forms
DECK-LOAD-UNIFORM 2,.015,39.25,90
DECK-LOAD-UNIFORM 2,.015,141.25,90
DECK-LOAD-UNIFORM 2,.015,243.25,90
DECK-LOAD-UNIFORM 2,.015,345.25,90
DECK-LOAD-UNIFORM 2,.015,447.25,90
DECK-LOAD-UNIFORM 2,.015,549.25,90
DECK-LOAD-UNIFORM 2,.015,651.25,90

COMMENT ASTM A572 Grade 50 Structural Steel

STEEL-PLATE-GIRDER 1,12,1.375,50,.5625,50,16,1.125,50
STEEL-PLATE-GIRDER 2,12,1.375,50,.5625,50,16,1.750,50

SHEAR-CONN-SCHEDULE 1,c

STIF-BEARING 100,7.500,.875,,,,W,50
STIF-BEARING 110,7.500,.875,,,,W,50

STIF-TRAN-GROUP 1,10.000,.5,,,50
STIF-TRAN-SCHEDULE 1,1,202.125,0,202.125
STIF-TRAN-SCHEDULE 1,1,252,202.125,1008
STIF-TRAN-SCHEDULE 1,1,189.875,1210.125,189.875

BRACING-SCHEDULE 1,202.125,0,202.125
```

```
BRACING-SCHEDULE 1,252,202.125,1008
BRACING-SCHEDULE 1,189.875,1210.125,189.875

LAT-SUPPORT-SCHEDULE 1,0

COMMENT Class 'D' Concrete for deck, F'c = 4.5 ksi
COMMENT Epoxy coated A615 Gr 60 Rebars
COMPOSITE-MATERIALS 4.5,60

COMPOSITE-SLAB 1,,8.5,2.50
COMPOSITE-SLAB 2,,8.5,2.50

COMPOSITE-REBAR 1,B,9,5,4.4375
COMPOSITE-REBAR 1,T,7,5,8.0625

COMPOSITE-REBAR 2,B,9,5,4.4375
COMPOSITE-REBAR 2,T,7,5,8.0625

COMMENT 1 span.
COMMENT Span length is 1400".
SPAN-LINEAR 1,1400,54

SPAN-SECTION 1,1,350,1
SPAN-SECTION 1,2,1050,2
SPAN-SECTION 1,1,1400,1

SUPPORT-FIXITY 1,R,R,F
SUPPORT-FIXITY 2,F,R,F

LOAD-DEAD-DESCR 3,DC,1,Diaphragms

LOAD-DEAD-POINT 3,1,0,0.390,0
LOAD-DEAD-POINT 3,1,0,0.180,202.125
LOAD-DEAD-POINT 3,1,0,0.180,454.125
LOAD-DEAD-POINT 3,1,0,0.180,706.125
LOAD-DEAD-POINT 3,1,0,0.180,958.125
LOAD-DEAD-POINT 3,1,0,0.180,1210.125
LOAD-DEAD-POINT 3,1,0,0.390,1400

COMMENT Live Loads
LOAD-LIVE-CONTROL B
LOAD-LIVE-DEFINITION 1,HL-93-TRUCK,DTK,D
LOAD-LIVE-DEFINITION 2,HL-93-TANDEM,DTM,D
LOAD-LIVE-DEFINITION 3,HL-93-LANE,DLN,D
LOAD-LIVE-DEFINITION 4,HS20T,TRK,D,,,,Y
LOAD-LIVE-DEFINITION 5,LANEHS20,TRK,D
LOAD-LIVE-DEFINITION 6,S220,TRK,L
LOAD-LIVE-DEFINITION 7,S335,TRK,L
LOAD-LIVE-DEFINITION 8,S437,TRK,L
LOAD-LIVE-DEFINITION 9,T330,TRK,L
LOAD-LIVE-DEFINITION 10,T435,TRK,L
LOAD-LIVE-DEFINITION 11,T540,TRK,L
LOAD-LIVE-DEFINITION 12,AC2,PTK,P
LOAD-LIVE-DEFINITION 13,AC3,PTK,P
LOAD-LIVE-DEFINITION 14,AC4,PTK,P
```

```
LOAD-LIVE-DEFINITION 15,AC5,PTK,P

COMMENT ADTT = 537, Use live load factor of 1.52 for legal loads &
COMMENT 1.50 for permit loads.
COMMENT Ref MBE Table 6A.4.2.2-1 & 6A.4.5.4.2a-1
FACTORS-LOAD-LL ST,1,,1.53,1.00
FACTORS-LOAD-LL ST,2,,0.00,1.50
FACTORS-LOAD-LL SE,2,,1.30,1.00

COMMENT Resistance factors for Steel.
FACTORS-RESIST-STEEL 1.0,1.0,1.0,0.9,0.85,1.0,0.9

COMMENT Resistance factors for system per AASHTO MBE 6A.4.2.4.
FACTORS-RESIST-MOD ST,FL,1.00
FACTORS-RESIST-MOD ST,SH,1.00
FACTORS-RESIST-MOD SE,FL,1.00
FACTORS-RESIST-MOD SE,SH,1.00

COMMENT Resistance factors for condition.
COMMENT NBI > 6, Condition Factor = 1.00
FACTORS-RESIST-COND ST,1.00
FACTORS-RESIST-COND SE,1.00
```

Appendix 108-2 – Load Restriction Resolution

LOAD RESTRICTION RESOLUTION

WHEREAS, Chapter 5, Title 17 §510, Delaware Code of 1974, as amended, provides that the Department of Transportation may determine the maximum weight of vehicles which can be safely driven across bridges in the control of the Department and may post such bridges for the maximum weight of vehicles that may operate over same, and

WHEREAS, an engineering investigation on Bridge No. 693 on Road No. 050 in New Castle County, indicates that the load limit should be modified due to completion of a recent rehabilitation project.

NOW, THEREFORE, BE IT RESOLVED that the Department, in accordance with the authority vested does hereby declare that the load limit on the above mentioned bridge at the location shown must be as per attachment and the restriction to become effective with the posting of the proper signs.

BE IT FURTHER RESOLVED that copies of this resolution be forwarded to the proper officials of the Department of Transportation and to the Superintendent of the Delaware State Police.

APPROVED _____ 20___

_____
CHIEF ENGINEER/DIRECTOR

INFORMATION FOR BRIDGE POSTING

COUNTY: New Castle

ROAD NO.: 50

BRIDGE NO.: 1-693

FEATURE INTERSECTED: Christina River

REASON FOR POSTING: Recent Rehabilitation Project Completion Improving The Structural Capacity of Bridge

POSTING:

Maximum Vehicle Gross Weight __ **Tons**

Delaware Legal Loads

S220: 2 Axle Single Unit  __ **Tons**

S335: 3 Axle Single Unit  30 **Tons**

S437: 4 Axle Single Unit  30 **Tons**

T330: 3 Axle Semi  __ **Tons**

T435: 4 Axle Semi  __ **Tons**

T540: 5 Axle Semi  37 **Tons**

AASHTO Legal Single-Unit, Specialized Hauling Vehicles (SHV's)

SU5: 5 Axle Single Unit  __**Tons**

SU6: 6 Axle Single Unit  33 **Tons**

SU7: 7 Axle Single Unit  33 **Tons**

NOTE: **If the posting for a particular vehicle is blank, then legal load applies.**

LOCATION MAP ATTACHED

Location Map

Section 109
Bridge Preservation Strategies

109.1 Introduction

Bridge Preservation projects include one of two types of bridge projects: Bridge Rehabilitation or Preventive Maintenance. Work on bridges tends to coincide with preventive maintenance, which is a cost-effective treatment for an existing roadway system that preserves the system; retards deterioration; and maintains or improves the functional condition. Bridge rehabilitation involves major work to restore the structural integrity of a bridge, widen roadways, and correct major safety defects.

Both preventive maintenance and rehabilitation strategies are described in Section 109. Preventive maintenance will include, but is not limited to, the following:

- Patching, repairing, and sealing concrete
- Bridge deck overlays and waterproofing membranes
- Repairing cracks in concrete
- Painting structural steel
- Sealing and replacing deck joints
- Improving deck drainage
- Power washing

Rehabilitation of culverts and retaining walls is included in Section 109 due to similarities in design and construction.

The Department evaluates several factors in the identification and prioritization of bridge rehabilitation candidates. These include:

- Bridge health index
- Structural sufficiency rating
- Historical significance
- Functional class
- Truck traffic volumes
- Bridge load capacity
- Fracture susceptibility
- Scour susceptibility
- Detour length
- Benefit/cost analysis considering lifecycle costs

All Delaware bridges in the NBI are inspected at least every other year to evaluate their condition. Bridges not on the NBI are inspected at least once every 4 years. Bridges not owned by the state are inspected by the Department, except bridges owned by the Delaware River and Bay Authority. Bridges must be inspected to be eligible for Federal-aid funds. Inspections are performed in accordance with the Department's *Bridge Inspection Manual* (2011) and the NBIS.

NBI inspections provide an overview of the major bridge components—i.e., deck, superstructure, and substructure—as well as an appraisal of the structural adequacy and functionality of the bridge. Preventive maintenance is also eligible for Federal funding, according to a state and Federal agreement initiated in 2008, based on a FHWA Memorandum dated October 8, 2004.

Information from the inspections is entered into the AASHTOWare BMS, formerly known as Pontis™, by the Department's Bridge Management Section. The BMS uses element-level inspections to determine the most cost-effective action for a given bridge element in a given condition state and generates a list of bridges with recommended maintenance, repair, and rehabilitation (MR&R) actions. This list of bridges is then ranked according to "deficiency points" using the Department's Bridge Deficiency Formula for selecting bridge replacement, rehabilitation, or preventive maintenance projects.

Other sources of information used by the Department's Bridge Management Section include:

- Bridge safety inspection file and structure data records (SDRs)
- Traffic counts from Division of Planning;
- Delaware's Historic Bridges Inventory
- Paint Condition Index listing

The Bridge Management Section screens all the information collected for work that can be performed by the District's forces or by their structure maintenance contracts. The remaining bridges are sent to the Bridge Design Section for investigation. Their investigation will include a review of the inspection reports and a field review. Based on their findings, a prioritized list of deficient bridges is added to DelDOT's Bridge Design projects for funding approval. Most projects are then initiated through DelDOT's Bridge Preservation Program through the Department's Capital Transportation Program (CTP).

Bridge improvement projects may necessitate improvements to conform to new roadway geometry. It may be necessary to widen a bridge or add shoulders, sidewalks, railings, or other improvements to eliminate hazards at bridge sites, even though the bridge may not have a high deficiency rating. The designer should evaluate what is needed—rehabilitation or replacement—in accordance with *Section 103.8 – Bridge Rehabilitation versus Replacement Selection Guidelines*, giving full consideration to the deficiency rating, the condition of the bridge, its remaining service life, and the purpose and goal of the project.

Some bridges may have to be rehabilitated because of unforeseen emergency circumstances, such as fire damage, washouts, or structural damage from traffic. The priority given these emergency projects by the Department will depend on their impact on traffic, the ease of detouring traffic, and the severity of the deficiency. Eligibility for Federal funding will be determined on a case-by-case basis.

109.1.1 Bridge Inspections and Load Ratings

In-depth bridge inspections at the beginning of projects assist in making rehabilitation versus replacement decisions. In general, an in-depth bridge inspection shall be conducted by the designer as part of the scope of work to assess rehabilitation needs and perform load ratings. The inspection may include both destructive and nondestructive testing, as needed, and will enable detailed information to be gathered for the as-built and as-inspected load ratings, and for possible strengthening of particular elements of the bridge. The designer shall review the original design drawings, as-built drawings, and any rehabilitation drawings prior to the start of the work, and include field-verification of critical information. Load ratings are to be conducted in accordance with the AASHTO *Manual for Bridge Evaluation* (2013) using Part A – Load and Resistance Factor Rating (LRFR) procedures. Load rating should be considered in any rehabilitation versus replacement decision. If a recent rating is not available, the designer shall rate the structure using LRFR. All rehabilitated structures shall be load-rated using LRFR procedures upon completion of the design work.

109.1.2 Environmental Considerations

The Department encourages recycling materials obtained from the demolition of structures and roadways. However, the designer must be aware of the environmental aspects of bridge rehabilitation. Many older structures used materials in their construction that are environmentally unacceptable today. The designer must be aware of environmental permit requirements and conditions for removal and disposal of hazardous materials such as utility conduits containing asbestos, creosoted timbers (and surrounding soil), and lead paint, or their by-products.

For bridges eligible for Federal funding, the designer shall consult 23 U.S.C. 144 regarding use of debris from demolished bridges and overpasses, requiring that debris from the demolition be made available for beneficial use by a Federal, state, or local government unless such use obstructs navigation.

The designer must evaluate all demolition to be encountered on the project to ensure that removal can be performed using commonly accepted methods both safely and economically. Demolition methods are the responsibility of the contractor. The Department reviews proposed demolition and shielding plans in the course of pre-construction reviews and during construction.

109.1.3 Rehabilitation Design Criteria

Existing bridge ratings are to be considered when developing the scope of bridge rehabilitation by defining the desired load ratings. The basis of design for bridge rehabilitation is AASHTO LRFD. The resulting rehabilitated structure is to meet the desired load ratings specified by DelDOT. *Refer to Section 108 – Bridge Load Rating*.

For all widening, confirm that the available existing bridge plans depict the actual field conditions. Bring to the attention of the Bridge Design Engineer any discrepancies that are critical to the continuation of the widening design.

For existing bridges, assume the target service life is 75 years, unless a LCCA to rehabilitate any one primary component (i.e., substructure, superstructure, or deck) determines otherwise. For additional information, the designer should refer to the draft publication

Design Guide for Bridges for Service Life, SHRP 2 Renewal Project R19A (TRB, 2013). The scope of a bridge rehabilitation project shall be developed to achieve the service life of the bridge. The target life for the rehabilitation work shall not be less than 30 years.

109.2 Material Testing

109.2.1 Concrete

Several laboratory tests ( ) are available for determining the properties of the existing concrete from core samples removed from bridge decks, structural beams, columns, etc. These tests, along with additional field tests, are typically performed when conditions warrant.

TABLE 109-1. LABORATORY TEST METHODS

Specification	Description
Tests performed by DelDOT Materials & Research (M&R) Section	
AASHTO T24 (ASTM C42)	Obtaining and Testing Drilled Cores and Sawed Beams of Concrete
ASTM C856 (Annex A only)	Petrographic Examination of Hardened Concrete
AASHTO T260	Sampling and Testing for Chloride Ion in Concrete and Concrete Raw Materials
ASTM C1583	Tensile Strength of Concrete Surfaces and the Bond Strength or Tensile Strength of Concrete Repair and Overlay Materials by Direct Tension (Pull-off Method)
ASTM C457	Microscopical Determination of Parameters of the Air-Void System in Hardened Concrete
Tests performed by Outside Agencies	
ASTM C856	Petrographic Examination of Hardened Concrete
ASTM C876	Corrosion Potentials of Uncoated Reinforcing Steel in Concrete
ASTM C1202	Electrical Indication of Concrete's Ability to Resist Chloride Ion Penetration

109.2.1.1 *Compressive Strength*

Concrete cores for testing should be at least 3.70 inches in diameter, or two times the nominal maximum size of the coarse aggregate, whichever is larger. The preferred length is twice the diameter; however, shorter cores may be used if there is insufficient member thickness, but minimum length-diameter ratio should not be less than 1. Obtaining, preparing, and testing of cores shall be performed in accordance with AASHTO T24 (ASTM C42).

109.2.1.2 *Alkali-Silica Reaction Evaluation*

Alkali-silica reaction (ASR) is the susceptibility of certain aggregates composed of various silica minerals to chemically react with alkalis such as sodium and potassium found in Portland cement to produce an expansive gel. The swelling form of the gel requires a minimum amount of calcium hydroxide to be present in the concrete.

If ASR is suspected, in accordance with ASTM C856, Annex A, a qualitative test can be performed by the Department's M&R section using the uranyl-acetate indicator method to test for the presence of ASR. If ASR is determined to be present at high levels, then a petrographic analysis may be recommended.

Concrete core samples should be removed from suspected ASR-affected decks and concrete members for petrographic and stereo microscopic evaluation by a petrographer experienced in evaluating ASR-affected concretes, and tested to determine the extent of reactivity, strength, and modulus. Petrographic examination should be performed in accordance with ASTM C856. Refer to *Section 109.2.1.6* – Petrographic Analysis, for additional information.

109.2.1.3 *Chloride Content*

Studies have shown that chloride contents above about 0.02 to 0.03 percent by weight of concrete (1.0 to 1.5 pounds per cubic yard), depending on the cement content, can promote corrosion of embedded uncoated steel in non-carbonated concrete (ACI 201: *Guide to Durable Concrete* [2008]). Levels below this threshold can accelerate corrosion in carbonated concrete.

To determine chloride content of the concrete with depth, sample chlorides using 0.25-inch-thick slices of a 4-inch-diameter core centered at the following depths: 0.375 inch, 1 inch, 2 inches, and 3 inches. Test at lower depths if the 3-inch layer shows significant chloride contamination; or at the depth of the top steel reinforcement if it is deeper than 3 inches. Also, determine the background or baseline chloride concentrations using at least two samples from depths great enough that the chloride value is not affected by chloride penetration from the surface. This provides the chloride concentration in the as-mixed concrete. Plot the chloride content versus depth. Testing should comply with AASHTO T260, using procedures for determining water-soluble chloride content.

For bridge decks, chloride concentration levels tend to be higher in the upper layers and the gutter area than those in other parts of the deck. Consequently, different areas of the deck may require different actions. Generally, core sampling for non-overlaid decks should consist of one core per 2,000 square feet of deck area, but no less than three for chloride ion testing.

109.2.1.4 *Freeze-Thaw*

The resistance of concrete to damage from freeze-thaw cycles (e.g., surface scaling, spalling, crumbling) is significantly improved by the use of intentionally entrained air. As water in moist concrete freezes, it produces osmotic and hydraulic pressures in the capillaries and pores of the cement paste and aggregate. The hydraulic pressure is due to the 9 percent expansion of water upon freezing in water-filled cavities. The osmotic pressure typically develops in cement paste from differential concentration of alkali solutions, whereby water is drawn from lower alkali pores into higher alkali ones. Entrained air creates voids that act as empty chambers to allow the freezing and migration of water to take place.

The air content of hardened concrete and of the specific surface, void frequency, spacing factor, and paste-air ratio of the air-void system can be determined by microscopic examination of polished sections in accordance with ASTM C457. The spacing and size of the air-voids may be determined using Procedure A or B. The durability of the concrete may then be assessed by interpreting the results in accordance with the guidelines given in Appendix X.1 of ASTM C457.

109.2.1.5 *Half-Cell Potential*

A half-cell analysis measures the active corrosion and corrosion potential of embedded reinforcing steel. This is done by measuring the electrical potential between two points. Half-cell readings are usually taken on the concrete surface along a grid pattern at 4-foot intervals. As part of the half-cell analysis test procedure, one wire (+) of a high-impedance voltmeter is attached to the reinforcing steel. The second wire (-) is attached to a copper-sulfate half-cell electrode (CSE). This test procedure is conducted in accordance with ASTM C876.

By taking readings of half-cell potentials at multiple locations, an evaluation of the corrosion activity of the embedded reinforcing steel can be made. ASTM standard C876 states that there is a 95 percent probability of corrosion if the CSE half-cell potential is more negative than -0.35V, but that corrosion is uncertain when potentials are between -0.20 and -0.35V.

109.2.1.6 *Petrographic Analysis*

Petrographic analysis is a microscopic examination of a concrete sample. Examination of hand-specimen or thin-sections provides a great deal of information about the constituents of the concrete, features of deterioration, and details of the mechanisms producing deterioration such as voids, micro-cracking in coarse aggregate, and cracking or debonding between the aggregate and the cement grout. Petrography can also be used to determine original mix proportions, including cement and aggregate type, water/cement ratio, air content and chemical admixtures used, as well as other physical features.

Samples for examination should preferably be 6-inch by 4-inch in cross section if possible, but no less than 4 inches in diameter. Sampling and visual examination should be performed in accordance with ASTM C823. Petrographic examination should be performed in accordance with ASTM C856 by experienced personnel.

109.2.2 Steel

Only a few laboratory tests are typically necessary for determining the composition and properties of existing bridge steels. These tests, along with additional field tests such as hardness, are typically performed to better characterize critical steel components that may be nonredundant, cannot tolerate any crack growth, or be subjected to necessary field welding.

109.2.2.1 *Chemical Analysis*

Chemical analysis should be performed in accordance with ASTM A751 practices, with percentages determined for carbon, manganese, phosphorous, sulfur, and silicon, at a minimum. The wet chemical test methods used for quantifying the individual elements for bridge steels are described more fully in ASTM E350. Samples may be obtained from remains of test coupons or from ½-inch-diameter steel slugs from drilled cores removed in the field. The carbon equivalent (CE) shall also be determined from the results to assess the weldability of the steel.

109.2.2.2 *Mechanical Properties*

Tensile tests are to be conducted in accordance with ASTM E8 methods. Full-size plate-type specimens should be obtained from the field whenever practical; however, standard ½-inch- and small-size ¼-inch-diameter cylindrical specimens may also be used. Specimens should

be tested with the rolling direction parallel to the load axis. Results should be reported for tensile strength, yield strength, percent elongation, and percent reduction of area.

Impact tests should be performed in accordance with ASTM E23 methods using Charpy V-notch (Type A) specimens. Full-size specimens should normally be used. Subsize specimens may be used if approved by the Bridge Design Engineer. The designer shall specify the preferred orientation for the specimens, as well as the array of test temperatures. If a sufficient number of specimens is available, tests should be carried out at 0, 40, 70, 100, 150 and 212 degrees Fahrenheit (°F). If there is a limited number of specimens, tests should be carried out at the AASHTO test temperature for the material.

If tensile test specimens are not used, laboratory hardness tests may be performed on remnants of Charpy V-notch specimens, or other specimens removed from the bridge, and results correlated to approximate tensile strengths in accordance with ASTM A370. Either Brinell or Rockwell hardness values may be determined, depending on the anticipated strength level of the steel. Yield-strength–to–tensile-strength ratios (YS/TS) for known bridge steels may then be applied to estimate a minimum yield strength level for design. Note that portable hardness testers meeting the requirements of ASTM E110 shall be used for field applications only. Ultrasonic Contact Impedance or Dynamic Impact (Leeb) testers shall not be used.

109.3 Concrete Bridge Decks

109.3.1 Condition Survey

In addition to performing concrete laboratory tests discussed in *Section 109.2.1 – Concrete*, the designer or the Department will conduct field activities for characterizing the condition of an existing concrete bridge deck. The decision of whether the designer or the Department conducts the activities depends on the particular contractual obligations agreed upon; however, in most cases, the Department will perform the work. These activities include:

- Visual inspection
- Delamination survey
- Reinforcing corrosion survey
- Deck coring

The designer must request the needed tests (except visual inspection) from the Materials and Research Section unless otherwise directed from the Bridge Design Engineer. Determination of the proper deck rehabilitation strategy is most effective when based upon a broad evaluation of multiple test results, and not based solely on the results of any one particular test.

109.3.1.1 *Visual Inspection*

Inspection of a concrete deck involves the assessment of five important conditions:

1. Cracking is a linear separation of the concrete matrix that may extend partially or completely through the concrete deck.

2. Spalling is caused by the separation and removal of a portion of the concrete, leaving a roughly circular or oval depression in the concrete.

3. Scaling is the gradual and continuous loss of surface mortar and exposure of the coarse aggregate due to frost and de-icing salts.

4. Wear or polishing is the loss of skid resistance due to heavy traffic volumes passing over the concrete surface.

5. Efflorescence is a white, powdery substance (calcium carbonate) that appears on the surface of the concrete along cracks due to leaching of calcium hydroxide from the cement paste, subsequent evaporation, and carbonation.

Each factor should be evaluated to determine the percent of deck area in each span that exhibits these conditions, and documented on a plan. In addition, an overall percentage for each condition should be computed for the total area of bridge deck.

Both the top surface and the underside of the concrete deck should be visually inspected. Cracks are best observed when surfaces are drying from recent rain, because the differential drying highlights fine cracks. The presence of a bituminous concrete wearing surface will prevent the visual inspection of the top of the deck. In these cases, the wearing surface may be partially or totally removed and the deck inspected; or the top of deck evaluation may be based on the observed condition of the underside of the deck. Likewise, where SIP forms exist, small portions of the form may be removed, especially in areas where leakage or corrosion is present. Typically, the top of the deck will have a condition equal to or worse than the bottom of deck.

109.3.1.2 *Delamination Survey*

The designer should chain-drag and hammer-sound the deck surface, and document the location, size, and amount of the delaminations on a plan. On large decks, select areas that are typical, and that can be surveyed in detail and used to estimate the overall deck condition. Generally, 100 percent of the deck area should be surveyed. This would include the traffic lane experiencing the most damage or having the most heavy truck traffic or de-icing exposure, and include the pier and joint locations. If less than 100 percent of the deck area is permitted by the Bridge Design Engineer, the surveyed locations should be sufficiently balanced so that a representative picture of the bridge condition is obtained.

Pull-off tests are conducted by the Department. These tests follow the procedures given in ASTM C1583, whereby a test specimen is formed by drilling a shallow, 2-inch-diameter core. The core is left attached to the concrete, and a steel disk is adhered to the specimen and pulled upward until failure occurs. The failure load, mode, and nominal tensile stress are then determined. A nominal tensile stress greater than 200 pounds per square inch is considered acceptable bond strength.

GPR can also be used to detect delaminations in bridge decks, particularly if the delamination has resulted in a wide void in the deck. GPR can also be used to locate reinforcing steel. This technique requires expertise to accurately gather and interpret data. If data collected with GPR are available, any delaminations that are identified should be documented on a plan.

The impact-echo method may also be used to detect delaminations in bridge decks. This nondestructive method involves introducing mechanical energy, in the form of a short pulse, into a structure. A transducer mounted on the surface of a structure receives the reflected input waves or echoes from the discontinuities (flaws) in the concrete. By determining a

propagation velocity, reflected waves can be analyzed with a Fast Fourier Transform analyzer to determine internal characteristics of the concrete. This method can detect the size and location of subsurface flaws such as honeycombing, overlay debonding, delaminations, and large subsurface cracks. In addition, the method can measure the thickness of the concrete deck. Areas showing delamination should be documented on a plan and investigated further by removing cores.

Infrared (IR) thermography can be used to detect concrete defects such as cracks, delaminations and concrete disintegration. IR is not to be used as a stand-alone method, but may be used in conjunction with other methods. IR cameras measure the thermal radiation emitted based on the thermal properties of various deck constituents or defects, and captures the regions with temperature differences. The three main properties that influence the heat flow and distribution in the concrete include the thermal conductivity, specific heat capacity, and density. When solar radiation heats up a deck, all the objects on the deck emit some energy back. This energy is then converted into an electrical signal, which is further processed to create a surface temperature map. Delaminated and voided areas filled with water or air have a different thermal conductivity and thermal capacity than the surrounding concrete; therefore, these areas heat up faster and cool down more quickly, and develop surface temperatures from 1 degree Celsius (°C) to 3°C higher than the surrounding concrete when ambient conditions are favorable. The method does not detect deep flaws, however; and the method is affected by surface anomalies and boundary conditions, such as when sunlight is used as a heating source, clouds and wind can affect the deck heating by drawing heat away through convective cooling.

109.3.1.3 *Reinforcing Corrosion Survey*

The designer should perform/request a half-cell survey of the entire deck if practical; if not, survey a sufficient number of typical areas to fully characterize its condition. The technician should note whether epoxy-coated deck reinforcing is present in the top mat only or in both top and bottom mats. The technician should also note if bar electrical continuity is present and if the half-cell measurements are reliably measured. Refer to *Section 109.2.1.5 – Half-Cell Potential,* for additional information.

Sufficient readings should be taken on a 3- to 5-foot grid pattern. Plot copper-copper sulfate potential values as contours, and identify area having potentials more negative than -0.35V on a contour map. Points of equal electrical potential are connected by iso-potential lines. Areas of high negative potential and large potential gradients can be readily identified. The areas having steep potential gradients may be better indicators of actively corroding locations than the fixed -0.35V criteria. Deck surfaces altered by carbonation, sealers, or membranes may affect the reliability of the half-cell values, and essentially shift the potential values to indicate less-active corrosion. Coring and visually inspecting the condition of the reinforcing steel in selected areas to verify corrosion activity is recommended. Coring in several "nonsuspect" areas is also suggested to verify bar conditions where corrosion is not predicted.

A pachometer survey or other approved non-destructive test methods shall be conducted to locate the top layer of reinforcing steel and depth of cover throughout the surveyed deck area. Reinforcing depth is necessary for interpreting the significance of the depth of chloride penetration into the deck as described in *Section 109.3.2 – Deck Evaluation*. Decks with

bituminous concrete-wearing surfaces cannot be tested unless the bituminous concrete is removed. The unit shall be calibrated to known bar covers and sizes prior to use.

109.3.1.4 *Deck Coring*

Coring bridge decks allow the designer to evaluate the compressive strength and concrete quality of the deck. Typically, 4-inch-diameter cores should be taken from several locations on the deck. When determining the number of cores to be obtained, consideration should be given to how these cores will be used for subsequent testing. Generally, core sampling for non-overlaid decks should consist of a sufficient number of cores for carbonation testing and petrographic examination, for compressive strength testing, and for chloride analysis. The recommended minimum number of cores is given in . Removal and testing shall be in accordance with AASHTO T-24 (ASTM C42) procedures. Core locations shall be sited to avoid existing deck reinforcement.

TABLE 109-2. RECOMMENDED CORING FOR DECK TESTING

Material Tests	Area of Bridge Deck (square feet)		
	< 6000	6000 – 18,000	>18,000
Carbonation and petrographic analysis[1]	2 cores	3 cores	4 cores
Compressive strength	2 cores	4 cores	5 cores
Chloride analysis	3 cores	6 cores	9 cores

[1] Carbonation and petrographic analysis can be performed on the same deck core.

Alternatively, samples for chloride analysis may be taken from the bridge deck at selected depths using the "Pulverizing Method" in accordance with Section 4.1.3 of AASHTO T260, subject to approval by the Bridge Design Engineer.

The designer should also test the exposed surface of cleaned drilled holes for depth of carbonation. Carbonation is known to lower the alkalinity of concrete and reduces corrosion protection for reinforcing steel. Testing can be done by first rinsing the hole with distilled water and then spraying it with a 1 percent phenolphthalein solution. Noncarbonated concrete will turn a bright pink/purple color, while carbonated concrete will remain colorless. Good-quality, noncarbonated concrete without admixtures will usually have a pH greater than 12.5. Record the depth of carbonation in the hole.

The designer should review all the compressive strength test results to identify the high- and low-strength areas and the concrete variability throughout the deck. It may not be necessary to remove the concrete in the high-strength areas. Removal of higher-strength concrete is more difficult, and the designer must alert the contractor to the variability of the concrete strength, especially when hydro-demolition is used.

109.3.2 Deck Evaluation

A "Deck Characterization" process is used to identify the current condition of the deck, and forms the basis for deck repair, rehabilitation, or replacement decisions. The process is described more fully in *Guidelines for Selection of Bridge Deck Overlays, Sealers, and Treatments* 2009, prepared by Wiss, Janney, Elstner Associates as part of NCHRP Project 20-

07 Task 234, and sponsored by AASHTO. This document will be referred to from here on as the Task 234 Guidelines.

The Deck Characterization process is driven by assessing the four following factors:

1. Percent Deck Distress and Visual Condition Ratings. This is determined by the percent of non-overlapping area of patches, spalls, delaminations, and CSE half-cell potentials more negative than -0.35V, by the NBI condition rating of the deck, and by a separate condition rating of the deck bottom surface. The rating for the underside of the deck is assigned using the same 0 to 9 scale employed for the NBI condition ratings. The determination of deck distress based solely on the NBI of the top deck surface is not allowed. As an aid, the following shows the NBI rating codes with supplemental information developed for bridge decks provided in brackets "[ ]."

   9 Excellent [No visible distress]
   8 Very Good [No visible distress except minor areas or fine cracking]
   7 Good [Less than 1 percent patches and spalls]
   6 Satisfactory [Deck shows minor spalling or moderate cracking]
   5 Fair [Less than 10 percent patches and spalls]
   4 Poor
   3 Serious [More than 35 percent deck distress]

   The "Percent Deck Distress" and the "Percent Deck Distress and Half-cell Potentials less than -0.35V" are calculated as follows:

   Percent Distress = non-overlapping areas of spalls + patches + delaminations, as a percent of area surveyed.

   Percent Distress+ Half Cell = non-overlapping areas of spalls + patches + delaminations + deck area with half-cell potentials less than -0.35 V (CSE), as a percent of area surveyed.

   Depending on the general deck condition, areas having sound, well-bonded concrete patches should be omitted from the total area of distress.

2. Estimated Time-to-Corrosion. This is expressed as the time until sufficient chloride penetration occurs to initiate corrosion of the reinforcing steel. If the Percent Distress for a bare deck (i.e., no overlay) is greater than 10 percent, or the Percent Distress + Half Cell is greater than 15 percent of the surveyed deck area, consider the corrosion "Ongoing." If percentages are less than these values, the designer shall determine the estimated time-to-corrosion initiation, using information from the chloride content analysis, depth of concrete cover information following the "Simplified Approach" procedures outlined in the Task 234 Guidelines. The expected depth of the chloride threshold front shall be calculated as follows:

   Depth in 5 years = current depth + rate of advancement x 5

If this calculated depth exceeds the 20th percentile depth of cover obtained from the cumulative distribution curve (determined from the histogram of field data collected for depth of concrete cover from the pachometer survey), report the time-to-corrosion as "< 5 years." Similarly, if the depth exceeds the depth of cover after 10 years, report the time-to-corrosion as "< 10 years." If the time-to-corrosion is greater than 10 years but the carbonation front exceeds the 20th

percentile depth of cover, report the time-to-corrosion as "< 10 years." The rate of advancement shall be determined from the tables given in Appendix B of the Task 234 Guidelines.

3. Deck Surface Condition. Certain deck surface conditions require improvements to the grade or quality of the riding surface. These conditions may include drainage problems, cross-slope or grade problems, uneven joints, concrete surface scaling, abrasion loss, or poor skid resistance. Decks requiring grade corrections or new surfaces are better candidates for overlays or structural rehabilitation than for routine maintenance. Surface scaling occurs when the air entrainment in the near surface is lowered by poor finishing practices. This deterioration will stop after the poorly air-entrained surface layer deteriorates and is worn away. Alternately, the affected surface concrete can be milled and grooved to restore ride quality.

4. Concrete Quality. Concrete bridge decks can be seriously affected by internal deterioration mechanisms such as alkali-aggregate reactions or delayed ettringite formation (DEF). Inadequate air entrainment results in concrete that will deteriorate due to cyclic freezing. Low strength could cause premature deterioration of bridge decks.

Typically, DEF is not common on decks because most decks are cast-in-place, thin, and not heat-cured. Deterioration due to cyclic freezing, although not common due to the routine use of air-entrainment, does sometimes occur on bridge decks. The service life of decks having poorly air-entrained concrete in cyclic freezing locations usually can be extended by placing an overlay to keep the concrete protected and less saturated with water, but in many cases it may be best to replace the deck.

Alkali-aggregate reactions can be moderate to severe depending on the aggregate properties and cementitious components of the concrete. The presence of alkali-aggregate reactions is a major concern, because deterioration can cause serious loss of deck integrity, and extending the service life of affected decks is difficult. Moderately large areas of concrete can fall away from the deck without significant warning in advanced cases of alkali-aggregate reactions, leaving only the reinforcing steel to support traffic. Repair of concrete decks determined to exhibit ASR must be considered carefully, and any proposed deck overlay or rehabilitation decisions are subject to approval by the Bridge Design Engineer.

Based on the assessment of the four factors above, is used to rate the significance of each finding and to direct the user to the most appropriate repair category. One of the following repairs is then selected for the deck:

- Do Nothing
- Maintenance, which may include:
  - Patching
  - Crack repairs
  - Concrete sealer
- Protective Overlay
- Rehabilitation, which may include:
  - Partial deck replacement
  - Cull-depth deck replacement

Each characterization factor and the resulting input for the decision process are illustrated below. Any individual factor can result in the need for a greater level of repair in the hierarchy from "Do Nothing" to "Rehabilitation." The "Do Nothing" option is selected only if all the factors rate within the Do Nothing category. A repair category is selected based on the factor(s) that indicate the greatest level of repair; or based on engineering or value judgments.

TABLE 109-3. DECK REPAIR EVALUATION MATRIX

Factors Repair	Deck Distress		Time-to-Corrosion Initiation	Deck Surface Problems	Concrete Quality Problems
Do Nothing	% Distress	< 1%	> 10 years	none	none
	% Distress + half cell	< 5%			
	NBI deck rating	≥ 7			
	underside rating	≥ 7			
Maintenance	% Distress	1 – 10%	> 5 years or > 10 years	none	none
	% Distress + half cell	1 – 15%			
	NBI deck rating	≥ 5			
	underside rating	≥ 5			
Overlay	% Distress	2 – 35%	Ongoing to < 5 years	yes	yes
	% Distress + half cell	10 – 50%			
	NBI deck rating	≥ 4			
	underside rating	≥ 5			
Rehabilitation	% Distress	> 35%	Ongoing	yes	yes
	% Distress + half cell	> 50%			
	NBI deck rating	≤ 3			
	underside rating	≤ 4			

NBI = National Bridge Inventory

The Do Nothing decision is appropriate for a deck in satisfactory condition with little corrosion risk in the next 10 years, or for a deck that is programmed to be replaced in the near future. It

is sometimes more cost-effective to allow an older deck in poor condition to deteriorate further prior to the scheduled replacement, delaying the need for expenses related to the bridge, however, safety still remains paramount.

The Maintenance option is best for decks showing little or no serious distress, and with little risk of deterioration in the near future. For decks subjected to de-icing chemicals, cracks should be sealed or repaired. Most visible cracks (widths > 0.010 inch) can allow de-icers to rapidly penetrate into the concrete deck and corrode reinforcement. If the deck has moderately to highly permeable concrete, a surface sealer can be an effective way to reduce the amount of chloride ingress into the concrete over time. Maintenance such as patching and sealing of decks with or without existing overlays is also done. Deep removal areas should be patched independently prior to placing an overlay.

A protective Overlay is often appropriate if the deck has little to moderate deterioration, but likely will have significant deterioration in the near future. Bonded overlays (as opposed to hot-mix asphalt [HMA] overlays) provide a new wearing surface so deck surface conditions—such as cross-slope and grade, joint transitions, drainage, abrasion resistance, skid resistance, or scaling problems—can be improved. Overlays also provide good protection to decks having many cracks because existing cracks rarely reflect through a newly bonded overlay. Overlays are well-suited for decks in very high traffic areas, where it is expensive and very disruptive to replace the deck using staged construction. Bonded overlays normally add structural capacity to the deck because the deck is thickened; however, such additional capacity shall not be considered in design. Overlays do add dead load, which can be reduced by using thinner overlays or by milling the concrete cover prior to placing the overlay. If a deck has been previously overlaid several times, and the concrete cover is a problem, a partial-depth deck replacement needs to be considered (see next paragraph). Refer to *Section 109.3.4.3 – Low-Permeability Overlays* for further information.

Rehabilitation of decks with moderate deterioration that require grade or slope corrections are candidates for partial-depth replacement. Partial-depth deck replacement includes removing the existing concrete deck to below the top mat of reinforcing, and replacing with low-permeability concrete in the upper portion of the deck. A minimum of 1 inch of clearance below the upper steel mat is required to allow for proper consolidation of the new concrete below the mat. Replacement of damaged and corroded top reinforcing is done before placing the new concrete.

Full-depth deck replacement is warranted if the bulk of the concrete deck is not adequately air-entrained to resist continued scaling and cyclic freezing damage; is spalled with exposed reinforcing on undersides of deck; or is seriously affected by ASR. If not replaced, the deck should be inspected annually until an estimate of the rate of deterioration can be established. Decks with cracking due to ASR may benefit from treatment with high-molecular-weight methacrylate (HMWM) resin to bond cracks, but service life may be extended only 2 to 5 years. Alternatively, the use of a lithium treatment for bridges meeting certain requirements may be beneficial. Refer to FHWA-HRT-04-113 *Protocol for Selecting Alkali-Silica Reaction (ASR) Affected Structures for Lithium Treatment* (2004).

109.3.3 Deck Removal Methods

Typical methods used for the removal of concrete, in whole or in part, for the repair, rehabilitation, or replacement of bridge decks include:

- Jackhammer
- Sawcutting
- Hydrodemolition
- Milling

The edges of areas to be patched must be saw-cut 1 inch deep into squares or rectangles. Saw cuts must be stopped at the corners to prevent overcutting. The corners must be hand-chipped. The rest of the removal is performed with jackhammers, hydrodemolition, or hand-chipping.

Jackhammer. The size of the jackhammer must be appropriate for the amount of removal to prevent unnecessary damage to the deck or superstructure. For delicate work, 15-pound demolition hammers shall be used.

Sawcutting. This method is prone to cutting the top flanges of girders and causing delays. Therefore, transverse cuts directly over girder lines are prohibited unless the designer provides supplemental direction or remedial measures to the contractor via notes or sketches shown on the Plans.

Hydrodemolition. Hydrodemolition is the use of high-pressure water jetting on a large scale to remove deteriorated concrete from bridge decks. The extent of concrete removal is primarily determined by concrete strength, water pressure, type of nozzle, and equipment speed. The designer must consider the strength of the concrete and the capability of the equipment before specifying this method of removal. Sufficient deck-condition data must be obtained to evaluate the removal needs. The designer must specify the minimum depth of concrete removal in areas with high concrete strengths, and estimate the quantity of removal in all areas.

Excessive pressure or inappropriate machine speeds will result in the removal of an excessive depth of concrete. To prevent this, the contractor is required to perform a demonstration in a test section. The designer must determine the size and number of test sections. Multiple machine settings may be required to match the depth of removal with the levels of deterioration and concrete strengths.

The depths and limits of removal and the number of test sections must be shown on the Plans.

Milling. Milling is used to prepare decks for complete overlays, or as an initial step when hydrodemolition is performed. The weight of the milling machine must be considered when milling bridges constructed with low or highly variable deck concrete strengths. The depth of concrete cover should be determined from the pachometer data collected as part of the Reinforcing Corrosion survey in order to avoid damage to the deck reinforcing.

Milling can be used to remove deteriorated wearing surfaces and to remove chloride-contaminated concrete. At least ½ inch to 1 inch of original concrete cover over the reinforcing steel must remain to ensure bar encapsulation. If the top portion of the steel is exposed in a chloride-contaminated deck, rapid corrosion of the steel can result in premature bond failures. Milling to near the top reinforcing layer may make future overlays more difficult, because little concrete cover is left over the steel; and this shall be avoided. If the reinforcing steel is exposed during milling, the concrete should be removed to at least ¾ inch below the steel using 15-pound demolition hammers. In general, the depth of milling should be kept to a

minimum, but should be decided based on the condition of the deck surface; the chloride contamination profile within the deck; dead load; and roadway elevation considerations.

109.3.4 Preventive Maintenance and Rehabilitation

109.3.4.1 *General*

Preventive maintenance of bridge decks is defined as crack sealing, surface sealing (using silanes and siloxanes), coating (using thicker polyurethanes and epoxy resins), and patching applied to the top surface of the deck. Rehabilitation consists of overlays, partial- or full-depth deck replacement, deck widening, and barrier reconstruction—exclusive of isolated repairs or barrier maintenance. For associated repair or replacement of deck joints encountered as part of these activities, refer to *Section 109.7 – Deck Joints*.

For proposed work involving new concrete or concrete repair material cast next to existing concrete, traffic in adjacent lanes shall be prohibited until the concrete strength has exceeded 0.5 f'_c to mitigate possible effects of traffic-induced vibrations. These requirements shall be specified on the Plans.

Any change in roadway profile or widening shall require a complete bridge-deck drainage analysis to be performed to determine the need for scuppers. Analysis shall be conducted in accordance with the FHWA's *HEC-21, Bridge Deck Drainage* (1993), the DelDOT *Road Design Manual* (2004) Chapter 6 – Drainage and Stormwater Management (updated July 2008), and *Section 104.2.3.1* – The *Rational Method*.

Repaired or widened bridge decks shall be designed by the Traditional Method. All new longitudinal and transverse deck reinforcement should match size, spacing, and coating of the reinforcement to which it is spliced. Also, deck thickness shall match existing thickness. Additional reinforcement shall be added as necessary to satisfy railing impact loads. Refer to *Section 109.3.4.5 – Barrier Reconstruction* for additional information.

109.3.4.2 *Patching*

The method of patching depends on the depth of the deteriorated area. A shallow repair is used where the depth of concrete deterioration is typically less than 2 inches, and reinforcing is not exposed. Deep repairs involve removal of concrete below the top mat of reinforcing steel, cleaning the steel, supplementing deteriorated steel, and placing and curing the repair material. A full-depth repair involves removing the entire thickness of concrete deck, cleaning the steel, supplementing deteriorated steel, and forming, placing, and curing the repair material. Generally, Portland Cement Concrete is used for deep-and full-depth repairs. For shallow repairs, several proprietary cement-based repair materials are available; however, asphalt shall not be used. Patches shall be made square or rectangular in plan; and edges sawcut 1 inch deep. For typical repair details, refer to Section No. 301.03 – Concrete Repair Details.

All delaminated areas must be removed. All chloride-contaminated concrete must also be removed, where the chloride concentration is greater than 0.03 percent by weight of concrete (1.5 pounds per cubic yard) found above the top mat of reinforcing steel.

If a shallow repair and patching is performed, the top surface of the deck above the top mat of reinforcing steel is to be removed without debonding, damaging, or dislodging the reinforcing steel. Removal can be accomplished by milling, hand-chipping, or hydrodemolition.

All new or existing bare reinforcing steel should be evaluated for the benefits of passive cathodic protection measures (e.g., point anodes or "hockey pucks"). Patching material must be compatible with the selected overlay, if one is subsequently applied. The surface must be patched prior to any overlay so that a uniform thickness will result.

If anchored temporary longitudinal barriers are installed as part of a traffic control plan, all holes drilled into the concrete deck must be repaired. The designer shall specify that the holes be filled with grout, and that the contractor submit repair methods to the Department for approval.

109.3.4.3 *Low-Permeability Overlays*

The goal of a bonded overlay is to have a low-permeability surface material. A Portland-cement–based composition must meet the "Very Low" chloride ion penetrability given in Table 1 of AASHTO T277 (ASTM C1202). The Department currently permits only latex-modified concrete (LMC), which consists of cement mortar or concrete mixed with styrene-butadiene latex. LMC may be used for thin patches, which may be placed concurrent with the overlay. The minimum thickness of an LMC overlay is 1¼ inches. The maximum thickness for LMC overlays is 2 inches. A structural analysis is needed for any overlay that increases the dead load more than 10 percent or 25 pounds per square foot, unless load ratings or existing design drawings indicate that such an increase in dead load can be permitted.

The minimum total clear cover over the top mat of reinforcing steel is 2½ inches for an overlay. Surface preparation is necessary to ensure the required bond between the overlay and the deck.

The designer shall review the chloride content with depth data, and determine the optimum depth of concrete removal and thickness of the overlay. If chloride concentrations at most bar depths are less than the chloride threshold C_T (taken as 0.03 percent by weight of concrete (1.5 pounds per cubic yard) for black steel, or 0.15 percent (7.5 pounds per cubic yard) for epoxy-coated steel), limit removal to only contaminated concrete areas where chloride concentration exceeds the threshold value. Cathodic protection shall be implemented for heavily contaminated decks where chloride-contaminated concrete cannot be removed by milling.

109.3.4.4 *Widening and Partial-Width Re-decking*

Compressive strength, unit weight, thermal expansion, and permeability of the new cast-in-place concrete or concrete repair material shall be compatible with existing, sound concrete properties.

Either precast deck panels or metal SIP forms may be used in lieu of a formed cast-in-place deck. The designer shall assume cast-in-place deck construction, but shall compute deflections separately for SIP forms based on an additional 15 pounds per square foot dead load, and provide either of the following: two camber diagrams, double table entries, or separate notes stating percent reduction for "Total DL" deflections with and without use of

SIP forms. For spans greater than 350 feet, the Bridge Design Engineer shall decide whether this information is to be provided or not.

For determining live load force effects in the slab, approximate methods of analysis in which the deck is subdivided into strips perpendicular to the supporting beams may be used, per Section A4.6.2 – Approximate Methods of Analysis, provided the difference in beam stiffness between interior and new exterior beams is not more than 15 percent. Differences greater than 15 percent will require more refined methods of analysis, in accordance with Section A4.6.3 – Refined Methods of Analysis, using grid or finite-element models.

109.3.4.5 *Barrier Reconstruction*

Whenever barriers are to be reconstructed or replaced on an existing deck slab that is largely to remain, the supporting deck overhangs shall be analyzed for the applicable design forces, in accordance with Section A13.4 – Deck Overhang Design. If necessary, additional reinforcing steel and/or supplemental anchorages shall be designed to meet the specified test level for the traffic railing (barrier).

Existing barriers to remain must be analyzed to determine their equivalent crash-load resistance (i.e., performance test level), and compared to the capacity of the existing deck overhang, as described above. If necessary, additional reinforcing steel and/or supplemental anchorages shall be designed for the overhangs to exceed the crash-load resistance of the existing barrier to meet the test level required.

109.3.5 Concrete Deck Replacement

109.3.5.1 *General*

Any deck other than cast-in-place concrete or precast concrete must be approved for use by the Bridge Design Engineer. The Department uses epoxy-coated reinforcing steel in all new and replacement decks, barriers, and barrier anchorages unless approved by the Bridge Design Engineer. Galvanized bars should not be used to supplement uncoated reinforcing bars.

Structural steel exposed during a deck replacement shall be cleaned and primed, as prescribed in *Section 106.8.7.1 – Paint Systems*.

109.3.5.2 *Cast-in-Place Concrete*

Both normal-weight and lightweight concrete may be considered for deck replacement, but the deck must be all normal-weight or all light-weight. Normal-weight concrete is preferred. The designer will specify the unit weight of concrete assumed in design. The bridge deck is to be designed by the Empirical Design method in accordance with Section A9.7.2 – Empirical Design. The Traditional Design method may be used subject to approval by the Bridge Design Engineer, or if the required design conditions given in Section A9.7.2.4 – Design Conditions are not met.

109.3.5.3 *Precast Concrete*

Consideration should be given to the use of precast deck slabs or deck panels during preliminary design. Use of standard details from FHWA ABC initiatives may be used when

demonstrated to provide economic or project schedule advantages. For preferences related to ABC construction, refer to *Section 103.9 – Accelerated Bridge Construction*.

Precast deck slabs are manufactured full thickness in segments for placement on the beams. A concrete overlay is required for the final roadway surface. Slabs are typically post-tensioned in the final deck configuration; however, use of UHPC has been shown to eliminate the need under certain conditions. The designer shall confirm adequate room for the post-tensioning as part of the deck design and staging analysis.

Precast, prestressed concrete deck panels are manufactured partial thickness (usually 3½ to 4½ inches), and are placed to act as SIP forms. The remainder of the deck is cast-in-place to form a full-thickness composite deck. Precast, prestressed concrete deck panels are not to be used where bridge skews exceed 30 degrees.

For deck slabs or panels, the designer shall consider the following, at a minimum, in the design and staging analyses:

- Composite action requirements
- Staged construction deflections and haunch provisions
- Staged construction load capacity
- Details for attachment of the slabs or panels to the superstructure
- Horizontal shear connection between the deck and superstructure
- Joints between slabs or panels
- Final roadway profile and surface

Refer to NCHRP Report 584: *Full-Depth Concrete Bridge Deck Panel Systems* (2008) and PCI *State-of-the-Art Report on Full-Depth Precast Concrete Bridge Deck Panels* (2005) for design of precast slabs.

109.4 Steel Grid Decks

109.4.1 General

Grid decks are only to be used on bridges where reducing deck weight is a primary design issue. Steel grids preferably will be filled (flush-filled), partly filled, or surfaced (overfilled) with either normal-weight or lightweight concrete, but may be open to meet weight or drainage requirements. A separate wearing surface may also be placed in addition to the concrete fill. As stated in *Section 109.3.2 – Deck Evaluation*, Task 234 Guidelines outlines the common steel-grid deck repairs used in the United States. Some common practices are to replace the concrete overlay with an asphalt-concrete overlay or polymer-concrete overlay, and/or to coat the open steel grid with a zinc-rich primer.

Both painted and galvanized grid decks are permitted and shall be evaluated based on the designer's judgment and the specific project requirements. The designer is encouraged to evaluate and specify more stringent fabrication tolerances, such as squareness, camber, and sweep, and increased installation requirements, such as minimum size and frequency of attachments, for new grid deck on highway bridges. The galvanization process has the tendency to warp the deck panels and create difficulties with field welding. If a warped panel is forced into place and fastened to the superstructure, induced stresses can cause the grid, the support member, or the connections to prematurely fail.

109.4.2 Existing Steel Grid Deck Evaluation

The designer shall conduct field activities for characterizing the condition of an existing grid deck. There are generally four considerations to be evaluated during a field survey of a steel grid deck:

- Connections between grid deck and the superstructure
- Corrosion of the grid and/or supporting elements
- Delamination of the surface
- Reduced skid resistance of the surface

Existing deck conditions are typically assessed through visual inspection. Each item in the list above shall be estimated to determine the percent of deck area that exhibits these conditions. The inspectors shall document all deck deficiencies on a plan. The percentages are used to determine the scope of the repair/rehabilitation plan.

In open-grid deck cases, a visual inspection along the top side of the deck is generally adequate in assessing the four survey items. However, the presence of a concrete fill will inhibit the inspection of the grid deck and connections. In these cases, an underside inspection is warranted to assess the underside of the grid deck, the connections, and the supporting members. If this type of inspection is not possible due to access restriction, space constraints, or other factors, selective removal of concrete fill for means of top-side inspection is recommended.

The field survey is used to identify the current condition of the deck, and forms the basis for deck repair, rehabilitation, or replacement decisions. Similar to *Section 109.3.2 – Deck Evaluation* for concrete bridge decks, four repair alternatives are provided once the condition of the grid deck is assessed:

1. Do Nothing
2. Patchwork/Localized Repair
3. Overlay
4. Partial or Full Deck Replacement

Note that the deck condition rating system adopted in *Section* 109.3.2 – Deck Evaluationis modified slightly and used herein for quantifying the severity of the four failure criteria. In general, deck distress that encompasses more than 25 percent of the deck area (or total quantity in the case of connections) is considered a serious condition worthy of partial or full replacement. Note that this value is a rule of thumb; the designer should ultimately use his/her judgment in determining the severity of the deck condition.

The Do Nothing decision is appropriate for a grid deck in satisfactory condition with very few failures, as outlined in the subsequent section (<1 percent deck distress), or a deck that is programmed to be replaced in the near future.

The Localized Repair option is best for decks with a few localized failures (<10 percent) that are not deemed to have significant risk of future deterioration. This alternative mainly covers a small patchwork of concrete fill (typically less than 5 square feet), and/or individual connection repairs, whether they are welded or mechanical fastener repairs.

The Overlay option is best suited for decks with little to moderate failures (<25 percent) that are likely to experience significant deterioration in the future, whether due to frequent exposure to de-icing chemicals and/or heavy traffic. Note that this repair alternative applies mostly to grid decks with existing concrete fill, and/or with an overlay. However, an open grid deck may be protected post-construction as long as the designer determines that the deck and bridge structure have adequate strength to handle the increased dead load.

The Deck Replacement option, partial or full, shall be implemented when a large percentage of the deck (>25 percent) has experienced one or all of the failure conditions described herein. The decision between partial or full replacement is the judgment of the designer, based on factors such as safety, traffic disruption, and cost.

The following subsections present the four evaluation considerations in greater detail. The aforementioned evaluation tools outlined in this section shall be considered for each of the four items.

109.4.2.1 *Connection Failure and Fatigue*

Grid decks are typically connected to the superstructure either by welding or mechanical fasteners. The connections are subjected to forces caused by the interaction between the grid and its supporting elements. These forces stem from vehicle loads, including those forces introduced through braking or accelerating. These connections may fail over time because of fatigue and other time-dependent effects.

When steel grid decks are subject to many cycles of loading and unloading (from 20,000 to over 5,000,000), the metal may fatigue and develop cracks in regions of high and localized stress. Left unaddressed, fatigue cracking can ultimately lead to the complete failure of the deck, the attachment of the deck to the supporting member, or the supporting member itself. The designer shall evaluate the severity of the condition and the remaining fatigue life of the existing connections (welds or fasteners) in accordance with AASHTO LRFD. This is especially important for movable bridges where the deck may be lifted high above the approach spans, causing additional safety concerns.

109.4.2.2 *Corrosion*

The grid bars (and the supporting purlins, stringers, and connections in the case of open grids) are exposed to road chemicals, including de-icing salts, which cause corrosion to develop in the steel grid deck system. Open-grid decks are more susceptible to these effects, but concrete-filled grids and those with overlays that contain cracks and spalls can contain corroded steel, as well. The connections can be subjected to expansion forces caused by corrosion of the steel grid ("deck growth") relative to its supporting elements, which may then fail over time.

109.4.2.3 *Delamination of Surfacing*

Filled and surfaced grids can also be subject to delamination between the riding surface and the grid. This is of particular importance for cases in which the concrete fill is used for its strength. Repair of the concrete fill and/or deck overlay may be required in these situations.

109.4.2.4 *Reduced Skid Resistance*

Both open grids and concrete-filled grids (flush-filled) without surfacing are subject to decreased skid resistance over time. Unsurfaced filled or partly filled grids can develop cupping or wear of the concrete between the grid bars, which exposes the grid to direct wheel loads. The surface then becomes similar to that of an open grid, and skid-resistance quality declines. This is dangerous in wet weather, because water is held in the cups. In freezing weather, the hazard increases due to ice formation. When new, the riding surface of the grid elements presents some resistance to skidding, but wear causes a reduction in skid resistance. Ultimately, it is up to the discretion of the designer to determine the severity of the grid and/or overlay wear, and which repair alternative is most prudent.

109.4.3 Design Considerations

Refer to Section A9.8.2– Metal Grid Decks for the design of steel grid decks. Additional information provided in this section supplements those design standards.

Welded and mechanically fastened connections are both permitted. For the replacement of existing grating, the designer is to evaluate and specify the method of removing existing connections and installing new grating, and select the method of making new connections. The corrosion resistance of connections is to match or be superior to that of the grating. Removing and reapplying the galvanizing or painting is to be accounted for by the designer for cost and schedule impacts.

Where welded connections are used, specify a minimum weld size of ¼ inch by 3 inches in length, or alternatively ¼ inch by 1½ inches on opposite sides at each main grating bar intersection with supporting steel. Effects of the welded details on the fatigue performance of the supporting members must be evaluated. Specify a minimum grid-deck thickness of 4 inches. The designer is to provide the minimum section properties required for the design of the grid-deck panels. The designer is to detail typical panel joints and panel support details around cut-outs or special conditions.

Replacement grid decks shall be shifted along the primary support member to preclude welding the grid at the same locations as the previous welds. Attachment of the grid to the superstructure is a critical detail and must be closely evaluated.

109.5 Timber Decks

109.5.1 General

For inspection and evaluation of timber decks, refer to Chapter 7 of FHWA's NHI 12-049 *Bridge Inspector's Reference Manual* (2012). For the design and maintenance of timber decks, refer to *Timber Bridges: Design, Construction, Inspection, and Maintenance* (Ritter 1990).

Timber decks are to be considered nearing the end of their useful lives when exhibiting a number of signs indicating that there are problems, including:

- excessive deflection under load;
- loose connections as a result of shrinkage;
- deterioration, such as checking, cracking, crushing, or rot; and

- wear of the timber deck evidenced by protruding nails.

When more than 25 percent of the members need replacement, the entire timber deck shall be replaced.

Timber decks should be replaced with precast, voided deck panels or reinforced-concrete slabs unless weight or aesthetic concerns (i.e., context-sensitive) justify replacement with timber. Structural composite lumber (SCL), stress-laminated panels, and glue-laminated panels may be used if approved by the Bridge Design Engineer. Following replacement, a new deck should not be cause for posting or load limits.

109.5.2 Design Considerations

Use pressure-treated lumber. All hardware shall be hot-dipped galvanized, including gang nails and clips used to provide bracing for supporting beams. The designer is to confirm preservatives specified are compatible for service with galvanized hardware.

Detail timber where practical to stagger panel and runway joints.

Contract documents shall indicate whether timber dimensions shown are nominal or actual, and are to be used consistently. Dimensional variations in rough or full-sawn timber are to be considered by the designer in developing design and details.

A bituminous concrete overlay should be considered for use over timber decks for rideability and to meet skid-resistance criteria. Both a leveling course and a surface course shall be used. A waterproof membrane is to be used for bituminous overlays over timber decks.

For timber bridge rail, see *Railing Systems for Use on Timber Deck Bridges* (Faller et al. 1999) and the FHWA "Bridge Railings" web page at http://safety.fhwa.dot.gov/roadway_dept/policy_guide/road_hardware/barriers/bridgerailings/.

109.6 Safety Considerations

It is desirable for safety items in completed projects to meet current Department and AASHTO standards when a deck rehabilitation or replacement project is constructed. These items include:

- Barrier rail;
- Approach guardrails and attachments to the structure;
- Curbs and/or sidewalks; and
- Approach guardrail end treatments.

The Bridge Design Engineer must approve design exceptions, where safety items at the completion of a deck rehabilitation or replacement project will not meet current Department standards.

For all NHS bridges, longitudinal barriers shall consist of bridge rail meeting Test Level 3 or higher requirements given in AASHTO *Manual for Assessing Safety Hardware (MASH)* (2009). For non-NHS bridges having design speeds less than 45 miles per hour, barriers may consist of bridge rail meeting Test Level 2 requirements, at a minimum. Highway safety hardware accepted prior to the adoption of MASH using the criteria contained in NCHRP Report 350:

Recommended Procedures for the Safety Performance Evaluation of Highway Features (1993) may remain in place and continue to be manufactured and installed.

Temporary longitudinal barriers used in construction zones shall meet the performance requirements for Test Level 3, unless unusual traffic type and volume require a different level.

Pinned-down F-shape barriers that incorporate pin-and-loop connections between 12½-foot-long barrier segments, two guide holes aligned 40 degrees from the roadway surface per segment, and 1½-inch-diameter by 21¼-inch steel drop-pins with ½-inch-thick plate covers that extend 6¼ inches vertically into the deck may be permitted by the Department (Sheikh and Bligh, 2009). Pinned-down F-shape barriers are to be used for temporary applications only.

Precast barriers attached to the deck using adhesive anchors will not be allowed.

Free-standing, unanchored temporary longitudinal barriers placed adjacent to deck openings shall be sited to provide sufficient clear distance behind the barrier to the opening to allow for the anticipated barrier displacement (i.e., maximum dynamic deflection) documented by crash testing and approval of the barrier system plus 1 foot. Otherwise, the barriers shall be rigidly attached to the existing bridge deck to transfer crash loads.

109.7 Deck Joints

The designer shall attempt to eliminate or minimize the number of deck joints whenever deck rehabilitation involves a partial-depth or full-depth deck replacement.

Refer to *Section 106.6 – Deck Joints* for the types of joint devices that may be used in Delaware. The designer should attempt to use sealed deck joints whenever possible, or provide sloped neoprene troughs under finger joints or sliding plates to control roadway runoff, for any deck overlay or deck rehabilitation project.

The limits of concrete deck removal on each side of an existing deck joint needed to install a new expansion joint device shall extend beyond the thicker, haunched slab section and be sufficient to allow for the replacement of the existing bent steel reinforcement.

109.8 Approach Slabs

Approach slabs are to be included in the condition evaluation of a bridge deck. Approach slabs are to be repaired or replaced when repairing or replacing bridge decks. If the approach slab has been previously overlaid with bituminous concrete, replacement with Portland cement concrete should be considered so the bituminous overlay is not needed. This should be done in conjunction with deck overlay or replacement.

Where approach slabs are undermined, repair by filling voids using one of the following:

- Cement grout (pressurized)
- Flowable fill
- Expansive polyurethane

The cause of the undermining can be leaking joints, therefore, reseal joints to prevent recurrence.

Existing bridges that currently do not have approach, but would otherwise be required per *Section 103.3.7 – Approach Slabs* shall have new approach slabs incorporated into the rehabilitation work.

109.9 Slabs, Beams, and Girders

109.9.1 Reinforced-Concrete Slabs

109.9.1.1 *General*

Typical simple-span, reinforced-concrete solid-slab bridges in Delaware have span lengths (as measured along the centerline of roadway) less than 35 feet, and roadway widths that carry two to four lanes of traffic between curbs. Many of these bridges are skewed, and built prior to 1970. Common practice consisted of placing the main bottom steel parallel to the curbs, and another layer of bottom steel parallel to the supports. Slab thicknesses ranged from 12 to 24 inches.

The primary tests used to evaluate slab bridges are visual examination, sounding, and coring. Additional testing options are the same as those used for concrete bridge decks. Refer to previous *Section 109.2.1 – Concrete*, and *Section 109.3.1 – Condition Survey*. In addition, the designer must evaluate each bridge for collision or fire damage, if suspected. Refer to the Commentary following Chapter 8, Part 21.3 of the AREMA *Manual for Railway Engineering*, Vol. 2 (2015) for information regarding the evaluation of fire-damaged concrete structures.

The designer must evaluate the structural effects of repairs and modifications—particularly the effects of concrete removal—on the capacity of the reinforced concrete. The need for shoring and falsework is to be determined, and is to be incidental to the design of repairs.

Repairs to slab bridges shall generally follow the materials and methods outlined for reinforced-concrete bridge decks. Refer to *Section 109.3.4 – Preventive Maintenance and Rehabilitation*. A pigmented waterproofing sealer should be applied to the entire underside and sides of the slab bridge to create a uniform appearance upon completion.

109.9.1.2 *Design Considerations*

When rehabilitating slab bridges, typically the direction of maximum bending moment can be taken parallel to the longitudinal direction of the bridge for all straight and skewed spans up to 45 degrees. Bending moments due to dead load in skewed bridges having “normal” span lengths less than half their width may be determined the same as for straight bridges (i.e., $0.125\ pa^2$) (Jensen and Allen, 1947). Note that the normal span length “a” is measured perpendicular to the supported edges.

Approximate methods of analysis for live load using equivalent strip widths, in accordance with Section A4.6.2.3 – Equivalent Strip Widths for Slab-Type Bridges, shall be used for determining longitudinal reinforcing steel (i.e., parallel to traffic) in slab bridges. For transverse reinforcing and edge support, refer to Sections A5.14.4 – Slab Superstructures and A9.7.1.4 – Edge Support, respectively. When necessary, the designer shall investigate shear forces at the corners caused by transverse curvature and skew effects using refined methods of analysis or simplified equations (Theoret et al., 2012). In addition, existing slabs that do not meet the minimum recommended thickness requirements specified in Table A2.5.2.6.3-1 shall be investigated for shear.

For all widening projects, closure pours shall be used between existing and new slabs. The thickness of new slabs should match the existing. The designer must take into consideration significant differences in elastic moduli and coefficient of expansion between existing and new slabs when such differences could result in significant variations in the distribution of live load. New slabs shall be cambered to match existing slabs.

New slab bridges joined to an existing are to be made integral by splicing of reinforcing. All new reinforcing steel shall match the existing size, spacing, and orientation; however, grade 60 reinforcing steel may be spliced with existing grade 40 steel. Stiffened edges need not incorporate an integral structural component, but shall be designed to support the full self-weight of the concrete barrier, in addition to other dead and live loads. In addition, stiffened edges shall incorporate C-shaped reinforcing bars along the outside edge to provide increased shear ductility.

Voided slabs are not allowed.

109.9.1.3 *Repair and Strengthening*

Repair methods for reinforced-concrete decks involving patching have been given previously in *Section 109.3.4.2 – Patching* and are considered equally suitable for slab bridges. The designer shall also consider alternative repair methods for slab bridges, which may include the use of pneumatically placed concrete (shotcrete) and/or epoxy injection of cracks when applicable.

Shotcrete. The designer shall select the most appropriate shotcreting method (wet or dry) based on recommendations given in ACI 506R: *Guide to Shotcrete* (2005) or ACI 506.1R: *Guide to Fiber-Reinforced Shotcrete* (2008). The designer shall incorporate the following into the design and contract documents:

1. At all construction joints, the shotcrete shall be tapered to the edge to permit overlapping of later material. Square joints are not allowed.
2. The thickness of each coat should not be greater than 1 inch, and should be placed so that it will neither slough nor decrease the bond of the preceding coat. Where a successive coat is applied on shotcrete that has set more than 2 hours, the surface must be cleaned and water-blasted.
3. The final surface of shotcrete should be given a rubbed finish.
4. No reinforcement is required for shotcrete encasement less than 1½ -inches thick.
5. A layer of reinforcement for each 4 inches (3 inches overhead) of thickness shall be required. Each layer should be 3-inch by 3-inch – W 1.4 × W 1.4 welded-wire reinforcing.
6. For thicknesses in excess of 4 inches (3 inches overhead), an additional two-way system of No. 3 reinforcing bars in both directions shall be used. Bars shall be wired to anchors spaced no further than 6 inches apart in any direction. The last layer of wire mesh shall be secured by wiring to the bars.

7. Mesh extending around corners or reentrant angles shall be shown bent to a template. At corners, double-reinforcing mesh should be provided and extended a minimum distance of 6 inches beyond the intersection of the two planes.

8. When splicing wire mesh, a lap of 1½ mesh spacings shall be shown, wired together at intervals of not more than 18 inches.

9. Where reinforcement is required for structural strength, engineering calculations must be furnished.

Epoxy Resins. Epoxy injection of cracks is an acceptable repair method. Some cracks are active, while others are not; therefore, the designer must determine the cause of the crack before attempting to seal or repair it. The designer shall select the most appropriate type of epoxy resin and viscosity depending on the need for structural bonding or waterproofing, based on recommendations given in ACI 546.3R: *Guide for the Selection of Materials for the Repair of Concrete* (2014) and ACI RAP-1: *Structural Crack Repair by Epoxy Injection* (2009). Crack widths exceeding the limits given in ACI 224R Table 4.1, "Control of Cracking in Concrete Structures," and accompanied by efflorescence and rust staining, shall be repaired.

109.9.2 Prestressed Concrete Beams

109.9.2.1 *General*

Types of prestressed concrete beams considered in this section include adjacent box beams, spread box beams, and I-girders (AASHTO or bulb-tee sections).

Bridge-widening projects shall match the aesthetic level of the existing bridge. Additions to existing bridges should not be obvious "add-ons." Use the same superstructure type and depth where possible. Avoid mixing concrete and steel beams in the same span. Bearing fixity and expansion devices should be the same in both the widened and existing bridges. Bridges composed of existing beams made continuous for live load shall have new beams designed and constructed in a manner similar to the original design details.

When redecking existing bridges composed of prestressed beams made continuous for live loads, continuity diaphragms shall not be removed below the top flange due to "locked-in" stresses.

When redecking existing bridges constructed with integral abutments, end diaphragms extending below the top flange shall not be removed due to "locked-in" stresses.

The designer must evaluate each bridge for collision or fire damage if suspected. Refer to the Commentary following Chapter 8, Part 21.3 of the *Manual for Railway Engineering*, Vol. 2 for information regarding the evaluation of fire-damaged concrete structures.

When evaluating damage from collision, employ the following concepts:

1. Exposed strands pose no immediate danger to the integrity of the beam unless there is a substantial loss of concrete.

2. A nick in three or less wires of seven-wire strand may remain in-service.

3. Severed or sharply bent wires are to be analyzed for increased strand stress and fatigue, and strands repaired or beam replaced accordingly.

4. Severance of more than two strands is to be considered cause for beam strengthening or replacement, based on analysis.

109.9.2.2 *Design Considerations*

Design all widenings and rehabilitations in accordance with AASHTO LRFD.

When evaluating existing beams or designing new beams as part of a widening project, the designer shall follow the requirements described in *Section 106.9 – Prestressed Concrete Bridge Superstructures* for prestressed concrete beam bridges.

When evaluating the shear capacity of existing beams, those that fail to meet the current shear provisions may be reanalyzed using the original design method to determine their capacity as long as it has been verified in the field there is no significant shear-related distress.

When detailing connections and selecting or reviewing construction methods, the designer shall consider the amount of differential deflection between adjacent beams (existing or new) that may occur prior to placing the new deck. Field measurements taken before and after any deck removal should be used to determine the elastic properties of an existing beam based on the rebound.

For composite bridge decks, decreases in camber between new and existing beams after deck has cured due to creep, shrinkage, and other prestress losses need not be considered due to increased stiffness of the overall composite system. Differences in stiffness between new and existing beams due to elastic moduli must be considered by the designer.

The designer is to take into account measures to maintain the stability of prestressed beams during redecking and/or widenings, including bracing, temporary erection towers, and measures necessary for erection in the staging and outages allotted for the work. The designer shall check the stability of the beams in the erected condition and calculate the bracing locations and forces required. For simple spans, evaluate both roll stability and service stresses, assuming full prestress losses have occurred for the following construction conditions (Mast, 1989 and 1993):

- Unbraced beam set on bearing pads with construction wind load acting;
- Braced beam set on bearing pads with design wind load acting; and
- Braced beam set on bearing pads with construction wind load and wet concrete deck loads acting.

The designer shall evaluate the exterior beams of the existing structure for construction conditions and the final condition; e.g., after attachment of the widened portion of the structure.

Whenever time-dependent prestress losses or elastic modulus for prestressed beams need to be determined more accurately than estimated methods, the designer should consult NCHRP Report 496: *Prestress Losses in Pretensioned High-Strength Concrete Bridge Girders* (2003).

The cause of cracking is to be understood and evaluated for possible effects and the practicality of rehabilitation. Loss of prestress force and fatigue shall be investigated. Shear cracks, flexure/shear cracks along the bottom flange greater than 0.009 inch wide, spaced less than 12 inches apart, and longitudinal cracks accompanied by efflorescence and rust staining, shall be repaired (AASHTO, 2011). Flexural cracks that are tight (< 0.004 inch) need not be repaired.

109.9.2.3 *Repair Methods*

The Department's preferred repair methods for prestressed concrete beams are discussed below.

Spalls and Cracks. When conventional, superficial-type repairs are needed for prestressed beams, the designer shall consider the following guidelines in preparing contract plans and specifications:

All deteriorated concrete shall be removed to sound concrete using pneumatic hammers that do not exceed a nominal 15-pound class. The sound concrete must exhibit a minimum surface profile of at least 0.125 inch, or as recommended by the repair material manufacturer.

Repair material shall have a compressive strength equal to or greater than the original concrete (when known), but not less than 4,500 pounds per square inch and 5,500 pounds per square inch at 7 and 28 days, respectively. In addition, the repair material shall have minimum bond strength of 200 pounds per square inch achieved with or without a bonding agent.

For concrete repair areas that equal or exceed 3 inches deep and 12 inches in any direction, mechanical anchorage and repair reinforcing is to be detailed.

Preload, if used, shall be specified on the contract drawings, along with assumptions and loading parameters used in repair analysis.

Cracks are to be repaired by epoxy injection as outlined in *Section 109.9.1.3 – Repair and Strengthening*.

External Reinforcing. Only non-prestressed carbon-fiber-reinforced polymer (CFRP) is to be used for external reinforcing. The designer must develop a conceptual design and provide calculations that summarize the assumptions and parameters used for the CFRP system and performance specifications that are to be included in the contract documents. The final design of the CFRP system will be the responsibility of the contractor.

Design in accordance with NCHRP Report 655: *Recommended Guide Specifications for the Design of Externally Bonded FRP Systems for Repair and Strengthening of Concrete Bridge Elements* (2010); and refer to NCHRP Report 609: *Recommended Construction Specifications and Process Control Manual for Repair and Retrofit of Concrete Structures Using Bonded FRP Composites* (2008), as well as ACI 440.2R: *Guide for the Design and Construction of Externally Bonded FRP Systems for Strengthening Concrete Structures* (2008) in preparing the conceptual design, contract drawings, and performance specifications.

The strengthening obtained by the CFRP system shall be limited to prevent sudden failure of the beam under sustained service loads in the event the CFRP system is damaged. The designer shall perform an analysis and design of the strengthened member to ensure that the member will fail in a flexure mode rather than a shear mode under overload conditions.

As a guideline, the designer should consider beam replacement when 25 percent of the strands in a beam no longer contribute to its capacity, or if excessive flexure cracks are present, which indicate substantial loss of prestress (FHWA, 2009b).

External Post-tensioning. Design using high-strength steel rods or strands. Refer to relevant sections of NCHRP Report 280: *Guidelines for Evaluation and Repair of Prestressed Concrete Bridge Members* (1985) and FHWA/TX-97/1370-3F: *Evaluation and Repair of Impact-Damaged Prestressed Concrete Bridge Members* (1996). These repair methods are discussed in more detail in *Section 109.11 – Foundation and Substructure*.

Strand Splicing. Induce a tension in the strand equal to that of adjacent undamaged strands. Only commercially available splicers such as "Grabb-It" cable splices are acceptable. The designer shall determine the required shortening for each splice based on the desired prestress force, stiffness of the splicer, exposed length of strand, and strand transfer length into the concrete (FHWA, 2009b). Specify "turn-of-nut" tightening method. Provide sufficient concrete cover following the repair, which may include the use of blisters on the surface of the concrete.

109.9.3 Steel Beams and Girders

109.9.3.1 *General*

For any major rehabilitation, the structure must be left in a redundant state unless approved by the Bridge Design Engineer. Refer to *Section 106.8.2.1 – Redundancy Requirements* regarding definitions and requirements.

109.9.3.2 *Design Considerations*

The designer must determine the extent of section loss of each steel member due to corrosion. Corrosion-induced section loss must be measured and included in an analysis. Both the location and extent of section loss must be defined and included in any calculations. Methods for field inspection and evaluation may be found in NCHRP Report 333: *Guidelines for Evaluating Corrosion Effects in Existing Steel Bridges* (1990).

Net section properties for riveted or bolted members are to be calculated following the relevant provisions of the AASHTO *Manual for Bridge Evaluation* (2013).

When evaluating existing beams or designing new beams as part of a widening project, the designer shall follow the requirements described in *Section 106.8.8 – Steel-Plate Girder and Rolled Beam Bridges* for steel-plate girder and rolled-beam bridges.

Barrier loads shall be distributed 75 percent to the exterior and 25 percent to the first interior girder unless a refined method of analysis is used. A structurally continuous barrier on a composite deck may be considered a participating structural element for service and fatigue if it is adequately connected to the deck to transmit the horizontal shear, but not for strength or extreme event-limit states.

When strengthening is required ($RF_{OPR} < 1.0$), beams shall be strengthened or replaced based on a cost comparison. Exterior beam with less capacity than interior beams that do not need strengthening may remain as-is, provided that the difference in stiffness between interior and exterior beams is less than 15 percent, based on steel only.

For design of slip-resistant bolted connections, Class A surface conditions between the existing steel faying surfaces are to be assumed for analysis (representative of unpainted clean mill scale) unless disassembling, cleaning, and painting are performed as part of the rehabilitation.

Deck replacements are to be designed and detailed to be composite with beams. For widening projects or partial deck replacements in which existing noncomposite bridge decks are to remain, the new concrete deck shall be designed and detailed to be composite. Consideration is to be given when designing shear connections for unintended contribution from the noncomposite deck sections.

Existing bridges with beams having stiffness that differ more than 15 percent (steel only), and bridges with skews or curved members (as defined in other sections of this Manual for new design), will require refined methods of analysis for determining load distribution.

For bridge widening, new diaphragms will match type and spacing of existing diaphragms.

For bridge widening, new beams must be sized to include the possibility of dead loads from SIP forms and future wearing surface. Existing beams should be analyzed for these dead loads, but loads may be omitted if strengthening is required. Refer to *Section 109.3.4.4 – Widening and Partial-Width Re-decking* regarding the calculation and presentation of dead-load deflections.

Existing members, or components of built-up members, that do not meet current LRFD limiting slenderness ratios (e.g., b/t, D/t_w) shall be reexamined using more refined methods, provided the method is fully documented.

109.9.3.3 *Repair and Strengthening*

The preferred method of repair and strengthening is with shop welding and field bolting, except as noted for shear studs. Field welding must be approved by the Bridge Design Engineer. For all field welding, including stud welding, the weldability of the existing steel is to be confirmed. provides information on steel specifications and periods of use.

TABLE 109-4. STRUCTURAL STEELS USED IN BRIDGE CONSTRUCTION

ASTM Spec	Dates in Effect	Specification Title
A7	1900 – 1967	Steel for Bridges and Buildings
A8	1912 – 1962	Structural Nickel Steel
A94	1925 – 1965	High-Strength Structural Steel (silicon steel)
A140	1932 – 1933	Steel for Bridges and Buildings (tentative revision to A7)
A242	1941 – present	High-Strength Low-Alloy Structural Steel
A373	1954 – 1965	Structural Steel for Welding
A36	1960 – present	Structural Steel
A440	1959 – 1979	High-Strength Structural Steel (for riveted construction only)
A441	1954 – 1989	High-Strength Low-Alloy Structural Manganese Vanadium Steel

TABLE 109-4. STRUCTURAL STEELS USED IN BRIDGE CONSTRUCTION		
ASTM Spec	Dates in Effect	Specification Title
A514	1964 – present	High-Yield-Strength, Q&T Alloy Steel Plate, Suitable for Welding
A517	1964 – present	Pressure-Vessel Plates, Alloy Steel, High-Strength, Q&T
A572	1966 – present	High-Strength Low-Alloy Columbium-Vanadium Structural Steel
A588	1968 – present	High-Strength Low-Alloy Structural Steel 50 ksi Minimum YP to 4" Thick
A690	1974 – present	High-Strength Low-Alloy Steel H-Piles and Sheet Piling
A709	1996 – present	High-Performance Steel
A141	1932 – 1966	Structural Rivet Steel
A195	1936 – 1966	High-Strength Structural Rivet Steel
A502	1964 – present	Steel Structural Rivets (Grades 1 & 2)
Ref: FHWA's NHI 12-049 *Bridge Inspector's Reference Manual,* December 2012		

The preferred method for making existing members composite is with automatic stud welding. Weldability of existing steel is to be confirmed as part of the investigation and design by identifying carbon content and CE. This can be determined using existing mill certificates or by chemical analysis of the existing steel. If heat input and/or preheat requirements following AWS D 1.5 prove prohibitive, mechanically fastened shear studs shall be used.

Removal of existing rivets is to be performed by mechanical methods only. Burning, arc-gouging, or oxygen lancing is not allowed.

Repairs to corroded sections in primary load-carrying members must result in a minimum steel thickness of 3/16 inch remaining. Knife-edged steel is to be removed by cutting or grinding, and the edges examined by nondestructive testing such as Magnetic Particle.

Bridge rehabilitation is to include maintaining acceptable clamping action from existing rivets. The designer is to consider head deterioration and looseness in identifying rivets to be removed and replaced with high-strength bolts. A procedure for sequencing of the rivet/bolt removal and replacement is to be included in the repair details, as required to maintain structural integrity.

Reduction in vertical bridge clearance due to repair details involving additional coverplates and bolts is to be considered and documented on the contract plans.

109.9.3.4 *Fatigue Evaluation and Repair*

Factors to be considered during rehabilitation design regarding fatigue evaluation include bridge skew, cover plates, attachment plates, web gaps, web penetrations, out-of-plane distortion, and traffic data. All category D though E′ details shall be checked for infinite life. If infinite life is not indicated, then a more refined site-specific fatigue analysis shall be performed.

For riveted bridges, stresses in base metal shall be calculated using the net section at the rivets, with the fatigue threshold to be taken as 7 kips per square inch for infinite life checks. For riveted members that have tensile stresses resisted by three or more elements, fatigue strength (finite life) shall be checked against category C. For simple riveted shear-type connections (e.g., coverplate ends, gusset plates, truss hangers), fatigue strength shall be checked against category D, unless the rivets exhibit good clamping force and bearing ratios are less than 1.5, in which case category C shall be used. The bearing ratio is defined as the

bearing stress of the rivet on the plate, divided by the tensile stress in plate. Stresses in category D shear-type connections may be checked against category C if the rivets are removed, and holes reamed and replaced with fully tightened high-strength bolts.

Tack welds found on bridges that are uncracked are not to be evaluated for fatigue unless evidence of cracking exists, or as otherwise noted below. Cracks determined by nondestructive testing to have merely severed the throats of tack welds but have not propagated into the base metal, or have separated from the base metal, shall be left in place. Partial depth cracks in the throats of tack welds shall be removed by grinding. Uncracked tack welds found in tensile zones of primary load-carrying members oriented in the direction of primary stress and subjected to maximum calculated stress ranges above 10 kips per square inch should also be removed by grinding.

For existing structures where details such as connection plates and stiffeners do not satisfy current practices for control of distortion-induced fatigue, the preferred approach is as follows:

1. No current problems: do not fix.
2. Isolated problems (e.g., distortion-induced web cracks, broken fasteners): analyze and fix problems only.
3. Widespread/systemic problems: fix relevant details structure-wide.

Crack repairs must include accurate identification of crack tip location through nondestructive testing, and confirmation by nondestructive testing that crack tips have been removed. For crack repairs involving modifications to connections, analysis shall verify changes in stress fields to confirm satisfactory performance of the repair.

In addition to other repair methods such as end-bolted coverplates, Ultrasonic Impact Treatment (UIT) may be used at weld toes of coverplate and stiffener details where the fatigue resistance needs to be improved. Effectiveness is limited to removal of shallow micro-discontinuities (e.g., slag intrusions) up to 0.025 inch in depth at uncracked weld toes, and where cracking from larger discontinuities at weld roots is unlikely.

109.9.3.5 *Fire Damage*

Exposed portions of steel bridges subjected to temperatures above 1,100°F (evidenced by damage to the zinc or lead primer) will decrease yield strength by more than 50 percent, and modulus of elasticity by more than 40 percent, compared to the undamaged condition. As a result, steels may suffer plastic deformations by exceeding the yield strength, or buckling caused by member stresses exceeding the limit of elastic stability. The degree of damage will depend on the maximum temperature to which the steel was exposed, the duration of the exposure, and the member loading during the event. Steel embrittlement can also occur from prolonged exposure at high temperature, followed by rapid cooling from fire-extinguishing foams or water. In cases where the steel has been exposed to high temperatures and/or significant deformation or embrittlement, the member(s) shall be replaced.

Rehabilitation of fire-damaged structures is to follow a project-specific inspection, design, and repair protocol to be developed as part of the preliminary engineering, and to be approved by the Bridge Design Engineer.

109.9.3.6 *Surface Preparation and Painting*

The extent of remediation of the coating on structural steel will depend on the condition of the existing coating. The designer has the following options:

- Minor cleaning and spot painting
- Partial cleaning and zone painting
- Full cleaning and full repainting

The first step is a visual inspection to evaluate the condition of the existing coating. Guidance for visual inspection should be performed in accordance with ASTM D610/SSPC-VIS-2: *Standard Test Method of Evaluating Degree of Rusting on Painted Steel Surfaces* (2001).

If overcoating is being considered, the designer should conduct the following tests:

- Adhesion tests
- Coating thickness for each existing layer
- Determination of existing paint type (alkalyd, organic, etc.)
- Determination of hazardous materials (e.g., lead content)

Multiple adhesion tests should be performed initially in accordance with ASTM D3359: *Standard Test Methods for Measuring Adhesion by Tape Test* for preliminary evaluation of existing coatings. Selected areas may then be examined in more detail in accordance with ASTM D4541: *Standard Test Method for Pull-Off Strength of Coatings Using Portable Adhesion Testers*. The designer shall propose a structure-specific paint-testing program to the Bridge Design Engineer for approval.

The designer must evaluate the test results in determining the best surface preparation and painting options. Existing coatings must have adhesion test results above 200 pounds per square inch to be suitable for overcoating. If the existing paint thickness is not greater than 20 mils and the adhesion test results are satisfactory, the bridge may be overcoated. If the paint thickness is greater than 20 mils, the paint must be removed before the steel is repainted.

Surface preparation and paint systems must be compatible with the existing paint system. If partial or zone painting is required, fascia beams should be completely recoated for a consistent appearance.

The designer shall identify the presence of any hazardous materials expected to be encountered in the execution of the painting work.

For truss and arch-type bridges, the designer shall perform additional structural analyses to determine the maximum allowable limits of a paint containment system (e.g., platforms and tarpaulins). The applied loadings shall consist of, but are not limited to, a vertical platform dead load of 35 pounds per square foot, and a horizontal wind load of 27 pounds per square foot (open truss) or 18 pounds per square foot (enclosed truss), based on a maximum wind velocity of 60 mile per hour.

The designer shall make allowances for the timing and sequencing necessary for the surface preparation and painting activities when preparing his/her construction schedule.

Surface Preparation. The method and extent of cleaning depends on the condition of the existing coating, the extent of repainting required, and the coating to be applied. Typically, the Department requires cleaning to bare metal (SSPC SP10 or SSPC SP11) for repainting of the existing steel. If overcoating is specified, a high-pressure water blast is recommended for the surface preparation, at a minimum.

Painting. The Department maintains a list of protective coating systems suitable for both new and 100 percent bare existing steel, or for overcoating based on the NEPCOAT Qualified Products List. Because of changing technology, the designer is encouraged to seek out the latest Department standards for paint application.

Factors considered when selecting a coating system include:

- Compatibility of the proposed coating with the existing coating;
- The presence of airborne chemical fumes or volatile organic compounds;
- The presence of water spray or misty conditions caused by nearby water;
- The height of the members above flood or tidal levels;
- Unusual roadway conditions (including open steel-grid decks) that allow drainage to pass over the structural steel or to pond water on the deck; and
- Accumulation of snow, ice, or debris against steel surfaces.

Usually, the Department employs different painting requirements on rehabilitation projects when full repainting or overcoating is necessary, compared to new bridges. Refer to *Section 106.8.7 – Protective Coating*s for additional paint system and painting requirements.

109.9.3.7 *Cathodic Protection*

Imposed current cathodic protection for steel members may be used only with the approval of the Bridge Design Engineer.

109.9.3.8 *Heat Straightening*

Heat straightening may be an effective means of repair to existing steel and should be considered for rehabilitations. Work is to follow FHWA IF-99-004: *Heat Straightening Repair of Damaged Steel Bridges* (1998). Heat straightening is not to be used for fire-damaged members.

109.10 Bearings

Bridges shall be upgraded to meet Seismic Zone 1 requirements in accordance with Section A3.10.9.2 – Seismic Zone and Section A4.7.4.4 – Minimum Support Length Requirements when rehabilitated or widened. For existing bridges that do not meet the minimum support length requirements at expansion bearings, longitudinal restrainers shall be installed in accordance with Section A3.10.9.5 – Longitudinal Restrainers. Shock Transmission Units (STUs) and dampers shall not be used. Lateral restraint, if necessary, shall include the addition of shear blocks.

When rehabilitation work involves jacking (refer to bridge jacking requirements in *Section 109.11.2 – Design Considerations*) for any reason, out-of-position bearings should be reset to proper position. Resetting bearings may introduce eccentricity of load and modifications should be made or analysis performed to ensure that the new load path is acceptable.

Bearings should be the same type with the same components in both the widened and existing bridges.

Bearings are normally replaced as part of a bridge rehabilitation project, or when bearings or bearing areas become so severely deteriorated as to jeopardize structural integrity. When all bearings along a substructure unit (e.g., single pier or abutment) are replaced, the replacement bearings should be upgraded to meet current Department standard bearings, rather than the same bearing type being used for replacement. The designer shall assess the longitudinal and transverse effects (i.e., reactions and movements) at all bearing locations resulting from the change in bearing stiffness/restraint for all applicable design load combinations. Individual bearing replacements are to be replaced in-kind.

The designer shall be attentive to the condition of "frozen" bearings that become released during bearing repair or replacement work. Locked-in stresses in the bearings shall be estimated and provisions incorporated in the design drawings for safe removal. Contract documents are to require lubrication of all expansion bearings other than elastomeric bearings.

109.11 Foundation and Substructure

109.11.1 General

For substructures considered for reuse, where there is no evidence of structural distress and for which rehabilitation work will not result in greater than 10 percent increase in the sum of the factored loads, the substructure element may be deemed acceptable without detailed analysis. This load comparison and need for evaluation is to be element-by- element (e.g., backwall, stem wall, piles).

Where substructures are considered for reuse and there is a significant increase in load, the designer will develop a foundation report based on a review and understanding of all available information relevant to the foundations, verified by a program of field testing such as ground-penetrating radar, cores, borings, and test pits. The foundation report is to be based on known substructure information and local geologic data.

Effects of foundation construction on existing structures are to be considered in the design and mitigated or avoided accordingly. Initial and long-term settlements for existing and proposed construction are to be understood and differential foundation settlements must be considered in design and detailing.

Use consistent foundation types where new and existing substructure elements are connected.

Design substructure rehabilitations to meet vehicle collision force requirements for new and reused substructures.

Where substructures are being considered for reuse, seismic requirements, for bearings, beam seat dimensions, and column ductility are to be evaluated. Design substructure rehabilitations to meet load and seismic requirements for bearings (see *Section 109.10 – Bearings*) and beam seats. Upgrades necessary to satisfy criteria for column ductility shall be determined by the Bridge Design Engineer on a case-by-case basis.

The Department will determine the need and extent of scour evaluation and scour mitigation measures in bridge rehabilitation projects on a case-by-case basis. This determination is to occur once the scope of structural rehabilitation work is established, and will be based upon scour risk, project size, complexity, cost, and the anticipated service life of the rehabilitated structure. Perform scour evaluations and the design of scour mitigation measures in accordance with *Section 104 – Hydrology and Hydraulics*.

Upon completion of repairs, coat substructure surfaces as outlined in *Section 107.4.1.5.5 – Protective Sealing of Surfaces*.

109.11.2 Design Considerations

All widenings, rehabilitations, and conceptual temporary support designs shall be in accordance with AASHTO LRFD.

Refer to *Section 107 – Final Design Considerations – Substructure* for design of new substructure elements.

The designer shall consider the feasibility of converting conventional abutments into semi-integral abutments to eliminate deck joints above the beam ends while retaining most of the existing abutment.

When encasing existing substructure elements, the minimum concrete thickness shall be 6 inches for conventional concrete and 4 inches for pneumatically applied concrete. The encasement is to be designed and detailed to be integral with the existing substructure element. Design conventional concrete encasements for temperature and shrinkage-reinforcing based on the encasement alone.

Where jacking and/or temporary support of bridge structure is required, the designer shall perform work as outlined below, and include in the contract drawings:

1. Develop and show on contract documents conceptual design(s) for temporary supports, demonstrating complete load path from structure to foundation for all proposed locations of jacking and/or temporary support. Include material type, overall member dimension(s), and a bracing schematic.

2. Verify the foundation is adequate for concept design, including accommodation of utilities and structures that may interfere with the concept support. Indicate the basis of foundation design and identify at a concept level where confinement or soil retention will be required.

3. Provide both factored and unfactored jacking loads linked with traffic staging. Specify that jack capacity must provide a safety factor not less than 1.65 (= 1.5*1.10 for "sticky force") based on the calculated unfactored design jacking loads. Factored loads may be used for contractor design of temporary structural supports (e.g., Maybe towers). Table 109-5 and Table 109-6 provide Sample jacking load tables.

TABLE 109-5. UNFACTORED LOADS FOR JACKING							
		Stage I		Stage II		Stage III	
Location	Girder	DL + 15%	DL + LL + Imp	DL + 15%	DL + LL + Imp	DL + 15%	DL + LL + Imp
Abut #1	G1						
	G2						
	G3						
	G4						
Pier	G1						
	G2						
	G3						
	G4						
Abut #2	G1						
	G2						
	G3						
	G4						

TABLE 109-6. FACTORED LOADS FOR JACKING							
		Stage I		Stage II		Stage III	
Location	Girder	DL + 15%	DL + LL + Imp	DL + 15%	DL + LL + Imp	DL + 15%	DL + LL + Imp
Abut #1	G1						
	G2						
	G3						
	G4						
Pier	G1						
	G2						
	G3						
	G4						
Abut #2	G1						
	G2						
	G3						
	G4						

4. Prohibit lifting the bridge via hydraulic pressure under live load unless approved by the Bridge Design Engineer.

5. Identify lateral and longitudinal load requirements for temporary supports and conceptual bracing. Seismic requirements may be waived. Fatigue requirements may also be waived, except for details, which are to remain permanent.

6. Show where temporary member-stiffening is required, and show conceptual stiffener details. The designer is responsible for the analysis, design, and detailing of permanent jacking stiffeners.

7. Specify prohibited means of work (e.g., field welding) and identify restoration requirements for existing members to remain upon completion of work.

8. Provide jacking scheme-suggested work sequence linking jacking with all work to be performed. Evaluate and account for deck continuity and restraining elements, and specify the maximum allowable displacement and/or differential displacements (where applicable). Establish performance criteria for when and what monitoring is to be performed.

9. Contract documents must specify that loads be secured before any existing material is removed. Jacked loads are secured by either temporary blocking (short columns or cribbing), or the use of locknut jacks. Hydraulic pressure is not to be used to support loads, even if the hydraulic pressure is maintained. During jacking, blocking or other means of support is to be maintained within 1 inch below the lifted structure.

Where PBES are a necessary component for constructing work shown in staged construction and traffic control plans, the designer is to develop and show a conceptual construction sequence consistent with the traffic plans. Task-specific time estimates are to be quantified and employed in the development of conceptual sequences. For more complete information on the use of PBES, refer to the FHWA website, https://www.fhwa.dot.gov/bridge/prefab/.

109.11.3 Repair Methods

General repair for foundations and abutments is similar to repair of concrete decks and slab bridges. Refer to *Section 109.3.4.2 – Patching* and *Section 109.9.1.3 – Repair and Strengthening* for repair methods. For typical repair details, refer to Detail No. 301.03 – Concrete Repair Details. More specific repairs for certain foundation elements that require additional attention are described in the following subsections.

109.11.3.1 *Bearing Seat Repairs*

The designer shall investigate the cause of spalls and cracks in all raised pedestals or bearing seats, and determine their effect on the support for the masonry plate. Superficial spalls and cracks considered minor (nonstructural) may be repaired using concrete patching or epoxy injection. Spalls and cracks that result in significant loss of support for the masonry plate will require removal of the bearing load and complete rebuilding of the pedestal or bearing seat.

Pedestals that lack confinement reinforcement shall be evaluated, assuming a non-uniform bearing stress is applied. Refer to Section A5.7.5 – Bearings.

For repair or replacement of anchor bolts, the designer shall determine the location of reinforcing steel prior to developing details. Proposed details shall consider limitations due to anchor bolt access, risk of damage to existing beams, and size of construction tools anticipated.

If access and remaining material are sufficient and weldable, repair details consisting of threaded studs welded to the unthreaded portion of existing anchor bolts may be permitted, when in accordance with AWS D1.4: *Structural Welding Code – Reinforcing Steel* (2005).

Weld-joint detail shall be a two-sided, full-penetration butt weld followed by 100 percent visual inspection.

The designer must evaluate all strength limit states (anchor steel, concrete breakout, and pryout) in accordance with Appendix D of ACI 318: *Building Code Requirements for Structural Concrete* (2014). Supplemental confinement reinforcement may be necessary when edge distance is limited. Frictional resistance beneath masonry plates will not be recognized unless approved by the Bridge Design Engineer.

109.11.3.2 *Post-Tensioning Repairs*

This subsection is relevant to repairs and rehabilitations employing post-tensioned high-strength steel bars and strands. Refer to *Section 106.9 – Prestressed Concrete Bridge Superstructures* regarding design and loads.

Post-tensioning design and detailing is to be developed considering redundancy so that it can be shown that failure of one bar or strand will not result in catastrophic failure. Design properties of existing concrete are to be verified by field testing.

Post-tensioning elements for permanent use are to be within grouted ducts unless impractical, and detailed in all cases for a minimum of three levels of corrosion protection for full length, including anchorages. Anchorages for permanent post-tensioning are to be within pour backs, and not blisters. Post-tensioning ducts are to be encased in concrete full length, or located in the interior of box beams.

The designer is to develop and include in contract documents a suggested work sequence, including verification of final loads, grouting, and inspection. Contract documents are to include requirements for mock-up testing of grout material and procedures.

109.11.3.3 *Underwater and Splash-Zone Repairs*

Where work is to be performed under water or in splash zones, the designer shall perform work as outlined below.

1. Develop conceptual repairs and present in the contract documents.
2. Identify specific repair type (e.g., spall repair, crack injection) and necessary preparatory work (e.g., sealing crack surfaces).
3. Identify limits of work, including maximum working depth, if concept involves divers.
4. Indicate permitting restrictions.

The designer shall review the Standard Specifications, and amend, if necessary, to provide additional information or direction to the contractor regarding work sequencing or dewatering concepts for unusual site conditions.

109.11.3.4 *Pile Repairs*

Analyses should be performed to evaluate pile capacity for the existing conditions, and during each phase of repair. The designer will identify any needed restrictions on live loads or contractor operations during construction. If the existing pile does not have adequate capacity

to support load during repairs, supplemental support must be identified on the contract drawings.

To extend the life of timber piles by field preservative treatment, the designer shall specify the use of solid "anti-fungal" cartridges, and to seal drilled holes with hardwood preservative treated plugs.

The designer may refer to the U.S. Department of Defense *Maintenance and Operation: Maintenance of Waterfront Facilities*, UFC 4-150-07, June 2007 for other repair techniques used for timber bearing piles.

109.11.3.5 *Scour and Undermining Repairs*

Scoured areas can be successfully repaired only if cause is first identified and understood. The impact of any countermeasures must also be evaluated. Scour countermeasures must be properly designed. Refer to *Section 104 – Hydrology and Hydraulics* and FHWA-NHI-09-111 *Bridge Scour and Stream Instability Countermeasures: Experience, Selection, and Design Guidance – Third Edition*, (HEC 23), 2009.

Riprap shall consist of stone meeting an R-5 gradation (see Standard Specifications. Desirable riprap slope is 2H:1V, but a maximum of 1H:1V is acceptable. The designer shall determine the limits of work, materials used, and method of construction for the riprap installation.

For undermined foundations accessible in the dry, the designer shall:

1. Develop conceptual repairs and present them in the contract documents.
2. Provide a suggested work sequence.
3. Provide an estimated volume of void.
4. Indicate where venting measures are needed.

For undermined foundations below water, the designer shall:

1. Develop conceptual repairs and identify whether dewatering is anticipated. Present concept in the contract documents.
2. Provide suggested work sequence.
3. Provide estimated volume of void.
4. Identify permitting restrictions.
5. Identify nature of undermining repair (e.g., hand-placed grout bags, grout tubes, tremie grout, sheeting and filling) and preparations (e.g., pressure wash).
6. Identify limits of work, including maximum working depth, if the concept involves divers.

Where undermining repairs can bond to existing piles, a structural analysis must be performed by the designer to evaluate the effect of the increased load.

Where scour and undermining exposes timber piling or cribbing, the designer will investigate the condition of the exposed timber, and incorporate into the scour repairs remedial measures to halt timber deterioration.

109.11.4 Stabilization and Underpinning

Stabilization and underpinning pertains to support for the existing superstructure, while permanent construction restores the bridge to full traffic. Stabilization or underpinning is normally a temporary repair. For measures intended for service up to 6 months, design for 2-year storm event. For anticipated service longer than 6 months, perform hydraulic and hydrologic evaluation as for permanent work. Drawings shall state the design-year storm event considered for the work.

For structural supports in temporary service, design in accordance with AASHTO LRFD. Do not include future wearing surface. Identify the basis of loads and design methodology on the plans. Live-load deflection criteria need not be considered.

109.12 Retaining Walls

109.12.1 General

This section pertains to the repair, rehabilitation, and the extension or modification of existing earth-retaining structures. Included are bridge wing walls, earth-filled arch spandrel walls, cantilever walls, gravity walls, gabion walls, mechanically stabilized earth walls, and cut or embankment retaining walls of various types for permanent installations. Refer to and work in conjunction with *Section 109.11 – Foundation and Substructure*, and *Section 109.13 – Culverts,* for breast walls and head walls for abutments and culverts respectively, and for guidance on the temporary support of excavation.

Refer to FHWA-CFL/TD-10-003: *Retaining Wall Inventory and Assessment Program (WIP)*, *National Park Service Procedures Manual* (2010) for guidance on assessing the condition of existing retaining walls.

For earth-retaining structures considered for reuse, where there is no evidence of distress related to sliding, overturning, and global stability, and for which rehabilitation work will not result in greater than 10 percent increase in the sum of the factored loads, the earth-retaining structure may be deemed acceptable without detailed analysis.

Where earth-retaining structures are considered for reuse and there is a significant increase in load and/or evidence of distress, the designer will develop a foundation report for the proposed work addressing the existing structure and embankment affected by the proposed work. The report is to be based upon a review and understanding of all available information relevant to the structure, verified by a program of field testing such as ground-penetrating radar, cores, borings, and test pits. The foundation report is to be based on known structure information and local geologic data.

For work involving all proprietary wall systems, designer responsibilities and information to be provided is to be as identified for MSE walls in *Section 107.6.1.2 – Designer Responsibility*. The designer is responsible for designing and detailing transitions from existing to proposed walls.

Unless structurally isolated, new walls are to be of a type similar to the existing retaining wall structure and foundation support for partial replacement or extension of existing walls. The designer is to consider and account for differences in earth pressures and movements resulting from stages of construction.

109.12.2 Design Considerations

Design and detailing of extensions for existing retaining walls for bridge rehabilitations is to follow *Section 107 – Final Design Considerations – Substructure*. For extensions to stone masonry walls, incorporate form liners, staining, modular masonry units, or other measures for consistency in appearance, unless historic considerations intervene.

When temporary support of excavation is necessary for constructing work shown on staged construction and traffic control plans, the designer is to develop and show a conceptual construction sequence consistent with the traffic plans.

Reuse of existing earth-retaining structures is the preferred strategy for rehabilitations, including raising or lengthening existing facilities. Technologies to offset increased loads through control of unit weights and/or lateral pressures such as geofoams, expanded shales, urethane foams, geotextiles, or compressible inclusions are to be explored by the designer (Horvath, 1991 and 1999; Karpurapu and Bathurst, 1992). Cast-in-place facings, using technologies such as self-consolidating concrete (SCC), are preferable to shotcrete.

The designer shall evaluate drainage and groundwater conditions for rehabilitation of existing retaining structures, and incorporate modifications or remedial measures as needed. Drainage measures are to be incorporated where facing or stone-pointing work interferes with current draining patterns.

109.12.3 Repair Methods

For repair of retaining-wall concrete, refer to *Section 109.11.3 – Repair Methods*. For repair of modular or proprietary walls, refer to published proprietary information and manufacturer representatives.

Rehabilitation of stone masonry is to include routing and pressure-pointing. The designer is to investigate and provide information on anticipated depth of routing and pointing, and whether stabilization of stonework by shims or spacers is needed. For guidance on stone masonry repairs, refer to the Pennsylvania Department of Transportation's *Stone Arch Bridge Maintenance Manual* (2007).

109.13 Culverts

109.13.1 General

This section applies to structural elements (bridges, culverts, pipes), or a series of such elements, having a total opening of 20 square feet or greater, for which the primary function is to convey surface water across or from the roadway. These elements are classified as culverts by the Department, and are the responsibility of the Bridge Design Section. Culverts meeting the NBIS structure length definition (> 20 feet) are part of the Highway Bridge Program.

Culvert rehabilitation work typically involves the repair of known deficiencies, increasing hydraulic capacity, or extensions due to roadway widenings. Deficiencies may consist of structural deterioration, cracking, leaking, corrosion, and differential settlement, streambed misalignment, scour, and erosion. Refer to the FHWA-IP-86-2: *Culvert Inspection Manual* (1986) for further information.

Use of metal culverts for rehabilitation work is prohibited unless approved by the Bridge Design Engineer. Existing metal culverts requiring rehabilitation are to be replaced with either concrete or high-density poly ethylene (HDPE) material. Replacement of metal culverts is not considered rehabilitation work. Refer to *Section 107.7.4 – Pipe Culverts*.

109.13.2 Design Considerations

Design rehabilitation work, including extensions and new cross sections added to existing culverts, in accordance with *Section 107.7 – Culvert Design*.

Design culverts extensions using foundations matching that of the existing culvert.

Culvert extension cross section may be different, but may not constrict or infringe on the existing culvert cross section at the discharge end. Extensions on the inlet end must match the existing cross section.

Design and detail culvert extensions for shear transfer to the existing culvert using shear keys, dowels, or other positive means. Key or dowel grouting shall be sequenced so that differential settlements have taken place prior to establishing shear transfer.

Culvert rehabilitation will result in structures that meet or exceed project-specific hydraulic capacities as determined by a hydraulic analysis, in accordance with *Section 104.3.1 – Culverts*. Culvert rehabilitation will result in adequate structural capacity for all legal statutory loads; refer to *Section 108.9.2 – Rehabilitated Bridges*.

The designer is responsible for considering construction impacts to existing culverts during rehabilitation work, and is to incorporate provisions for protective measures and construction sequencing in the schedule, cost estimate, and contract documents.

Existing culverts may be abandoned in place but must be filled using flowable fill or lean concrete.

For modifications to headwalls and wingwalls, refer to *Section 109.12 – Retaining Walls*.

109.13.3 Repair Methods

Refer to Chapter 14, "Culvert Inspection, Material Selection, and Rehabilitation Guideline" of the AASHTO *Highway Drainage Guidelines* (2007), and FHWA *Culvert Repair Practices Manual*, Volumes I, FHWA-RD-94-096 (1994), and II, RD-95-089 (1995), for repair methods.

109.14 Utilities

Any utilities on an existing bridge must be protected during rehabilitation. The designer is to incorporate in the contract documents planking or other protection measures to prevent damage from dropped items. The designer is to coordinate with the utility for requirements

such as utility support rehabilitation, temporary support or relocation, and modifications necessary to accommodate jacking.

The designer should be aware of any utilities near the structure that may affect the contractor's operation during rehabilitation, and account for such conditions in the design, scheduling, and estimate. For example, high-powered electrical lines pose a hazard for crane operation.

109.15 Moveable Bridges

The Department has eight movable bridges in its bridge inventory, and has developed an Operations Manual (Volume 1), Maintenance Manual (Volume 2), and As-Built Drawings (Volume 3) for each bridge.

The Operations Manual consists of procedures for bridge operations and bridge operational troubleshooting. The Maintenance Manual consists of mechanical and electrical maintenance procedures for each component on the bridge. The As-Built Drawings consist of updated or revised as-built drawings for the mechanical and electrical systems.

These manuals require updating whenever mechanical and electrical work is completed on each bridge.

109.16 References

AASHTO, 2007. *Highway Drainage Guidelines.*

AASHTO, 2009. *Manual for Assessing Safety Hardware (MASH)*.

AASHTO, 2011. *Guide Manual for Bridge Element Inspection*, 1st edition.

AASHTO, 2013. *Manual for Bridge Evaluation*, 2nd Edition with 2012 and 2013 Interim Revisions.

AASHTO, 2014. *AASHTO LRFD Bridge Design Specifications*, 7th Edition.

ACI, 2005. ACI 506R: *Guide to Shotcrete.*

ACI, 2008. ACI 201: *Guide to Durable Concrete.*

ACI, 2008. ACI 440.2R: *Guide for the Design and Construction of Externally Bonded FRP Systems for Strengthening Concrete Structures.*

ACI, 2008. ACI 506.1R: *Guide to Fiber-Reinforced Shotcrete*.

ACI, 2009. ACI RAP-1: *Structural Crack Repair by Epoxy Injection.*

ACI, 2014. ACI 318: *Building Code Requirements for Structural Concrete.*

ACI, 2014. ACI 546.3R: *Guide for the Selection of Materials for the Repair of Concrete.*

ASTM and the Society for Protective Coatings, 2001. ASTM D610/SSPC-VIS-2: *Standard Test Method of Evaluating Degree of Rusting on Painted Steel Surfaces*.

AREMA, 2015. *Manual for Railway Engineering*, Vol. 2.

DelDOT, 2004. *Road Design Manual*.

DelDOT, 2011. *Bridge Inspection Manual*. December 2011.

Faller, R.K, Ritter, M.A., Rosson, B.T. and Duwadi, S.R., 1999. *Railing Systems for Use on Timber Deck Bridges*, Transportation Research Record 1656, Transportation Research Board, Washington, DC.

FHWA, 1986. FHWA-IP-86-2: *Culvert Inspection Manual*.

FHWA, 1993. *HEC-21, Bridge Deck Drainage.*

FHWA, 1994. FHWA-RD-94-096: *Culvert Repair Practices Manual*, Volume I.

FHWA, 1995. FHWA-95-089: *Culvert Repair Practices Manual*, Volume II.

FHWA, 1996. FHWA/TX-97/1370-3F: *Evaluation and Repair of Impact-Damaged Prestressed Concrete Bridge Members*.

FHWA, 1998. IF-99-004: *Heat Straightening Repair of Damaged Steel Bridges*.

FHWA, 2004. FHWA-HRT-04-113: *Protocol for Selecting Alkali-Silica Reaction (ASR) Affected Structures for Lithium Treatment.*

FHWA, 2006. HEC-14, *Hydraulic Design of Energy Dissipators for Culverts and Channels*, Third Edition, FHWA-NHI-06-086, July. https://www.fhwa.dot.gov/engineering/hydraulics/pubs/06086/hec14.pdf

FHWA, 2009a. FHWA-NHI-09-111: *Bridge Scour and Stream Instability Countermeasures: Experience, Selection, and Design Guidance – Third Edition*, (HEC 23).

FHWA, 2009b. Report PA-2009-008-PIT 006: *Repair Methods for Prestressed Concrete Bridges*. Final Report, June.

FHWA, 2010. FHWA-CFL/TD-10-003: *Retaining Wall Inventory and Assessment Program (WIP), National Park Service Procedures Manual.*

FHWA, 2012. NHI 12-049: *Bridge Inspector's Reference Manual*.

FHWA, 2014. *Bridge Railings:* http://safety.fhwa.dot.gov/roadway_dept/policy_guide/road_hardware/barriers/bridgerailings/.

FHWA, 2015. Prefabricated Bridge Elements and Systems (PBES): https://www.fhwa.dot.gov/bridge/prefab/.

Horvath, J.S., 1991. *Using Geosynthetics to Reduce Surcharge-Induced Stresses on Rigid Earth-Retaining Structures*. Transportation Research Record 1330, Transportation Research Board, Washington, DC.

Horvath, J.S., 1999. *Designing with Geofoam Geosynthetic*, Horvath Engineering P.C. publisher, and ASCE CE Seminar.

Jensen, V.P. and J.W. Allen, 1947. *Studies of Highway Skew Slab-Bridges with Curbs*, University of Illinois – Engineering Experiment Station, Bulletin No. 369, September.

Karpurapu, R. and R.J. Bathurst, 1992. "Numerical Investigation of Controlled Yielding of Soil-Retaining Wall Structures." *Geotextiles and Geomembranes*, Vol. 11, No. 2, pp. 115-131.

Mast, R.F., 1989. *Lateral Stability of Long Prestressed Concrete Beams* Part I, PCI Journal, Vol. 34, pp. 34-53.

Mast, R.F., 1993. *Lateral Stability of Long Prestressed Concrete Beams* Part II, PCI Journal, Vol. 38, pp. 70-88.

NCHRP, 1990. Report 333: *Guidelines for Evaluating Corrosion Effects in Existing Steel Bridges.*

NCHRP, 1993. Report 350: *Recommended Procedures for the Safety Performance Evaluation of Highway Features.*

NCHRP, 2003. Report 496: *Prestress Losses in Pretensioned High-Strength Concrete Bridge Girders.*

NCHRP, 2008. Report 584: *Full-Depth Concrete Bridge Deck Panel Systems*.

NCHRP, 2008. Report 609: *Recommended Construction Specifications and Process Control Manual for Repair and Retrofit of Concrete Structures Using Bonded FRP Composites.*

NCHRP, 2010. Report 655: *Recommended Guide Specifications for the Design of Externally Bonded FRP Systems for Repair and Strengthening of Concrete Bridge Elements*.

NCHRP, 1985. Report 280: *Guidelines for Evaluation and Repair of Prestressed Concrete Bridge Members*.

PCI, 2011. *State-of-the-Art Report on Full-Depth Precast Concrete Bridge Deck Panels.*

Pennsylvania Department of Transportation, 2007. *Stone Arch Bridge Maintenance Manual*, October.

Ritter, M.A., 1990. *Timber Bridges: Design, Construction, Inspection, and Maintenance*, U.S. Dept. of Agriculture, Forest Service.

Sheikh, N.M. and Bligh, R.P., 2009. *An Easy to Use Pinned-Down Temporary Concrete Barrier with Limited Deflections*, Transportation Research Board 88th Annual Meeting, January 11-15.

Theoret, P., Massicotte, B. and Conciatori, D , 2012. *Analysis and Design of Straight and Skewed Slab Bridges*, ASCE Jou. Bridge Eng, Vol. 17, No. 2, March.

TRB, 2013. *Design Guide for Bridges for Service Life*, SHRP 2 Renewal Project R19A.

U.S. Department of Defense, 2007. *Maintenance of Waterfront Facilities*, UFC 4-150-07, June 2007.

Wiss, Janney, Elstner Associates, 2009. *Guidelines for Selection of Bridge Deck Overlays, Sealers, and Treatments* (NCHRP Project 20-07 Task 234 Guidelines).

Section 110
Ancillary Structures

110.1 Introduction

The purpose of this section is to establish policies and procedures for identifying DelDOT preferences for the final design and detailing of ancillary structures.

110.2 Terms

Overhead Sign Structures – Structural supports for any overhead sign that extends over any portion of the roadway, including the shoulders, and provides motorists with a variety of messages.

Sound Barrier Walls – Walls that are erected to attenuate noise created by transportation facilities. These walls are also commonly referred to as noise walls.

Variable Message Sign (VMS) – A programmable sign that can display any combination of characters to present messages to motorists. This section will address those signs that are permanently mounted on overhead structures, although VMSs may be semi-permanent or portable, and are also known as Dynamic Message Sign (DMS) or Changeable Message Sign (CMS).

110.3 Overhead Sign Structures

Sign structures support both overhead and roadside highway signs. Overhead signs are highway signs that extend over any portion of the roadway, including the shoulders, and provide motorists with a variety of messages. Delaware is in the process of transitioning from truss-type overhead sign structures to tubular overhead sign structures. Roadside signs are located outside the roadway and shoulders. The primary focus of this section is to outline the procedures used to design and detail new tubular overhead sign structures, as well as address rehabilitation of existing overhead sign structures. Roadside signs are not explicitly discussed in the following sections; design of these supports shall be in accordance with the references below.

The following subsections are largely based on the information documented in two primary references: AASHTO *LRFD Specifications for Structural Supports for Highway Signs, Luminaires, and Traffic Signals*, 1st Edition (2015); and AASHTO LRFD, as modified by this Manual.

The Traffic Section is responsible for determining the need, size, and location of signs on a roadway, per the standards and guidelines in the latest version of the *Delaware Manual of*

Uniform Traffic Control Devices (2011) and the FHWA's *Manual of Uniform Traffic Control Devices* (2009). It is then the responsibility of the designer to select the appropriate sign structure, given the signage required by the Traffic and Safety Engineer. The following subsection outlines all commonly used overhead sign structures, and the design considerations to be weighed when selecting the most appropriate structure type.

110.3.1 Overhead Sign Structure Types and Geometrics

There are two major types of overhead sign structures—cantilever and span-type—as shown in Figure 110-1 through Figure 110-5, and as outlined by *LRFD Specifications for Structural Supports for Highway Signs, Luminaires, and Traffic Signals*. Cantilever sign supports are typically more appropriate and cost-effective for shorter spans. However, span-type supports become advantageous when more signage is required, or the roadway is wider. Span-type structures shall be selected over cantilevered structures when the required span exceeds 42 feet 6 inches, or 40 percent of the roadway cross section; or when the span-to-height ratio of the cantilever exceeds 1.5.

Overhead sign structures can either be ground-mounted or bridge-mounted. Bridge-mounted sign structures can provide information to motorists passing on the structure or passing under the structure. The concepts shown in Figure 110-1through Figure 110-5are applicable for all cases. Refer to *Section 110.3.2 – General Design Considerations* for structure type preferences for ground- and bridge-mounted conditions.

In addition to typical overhead sign structures, signs mounted directly to a bridge fascia are commonly used. These signs provide information to motorists passing under a bridge only. An example is shown in Figure 110-6.

110.3.1.1 *Cantilever Sign Structures*

Tubular cantilever sign structures consist of four common types: (1) **single-cantilever**; (2) **butterfly**; (3) **dual-cantilever**; and (4) **butterfly VMS**.

A **single-cantilever** structure (Figure 110-1) consists of a curved post field-spliced to a single mast arm, to which the sign is connected.

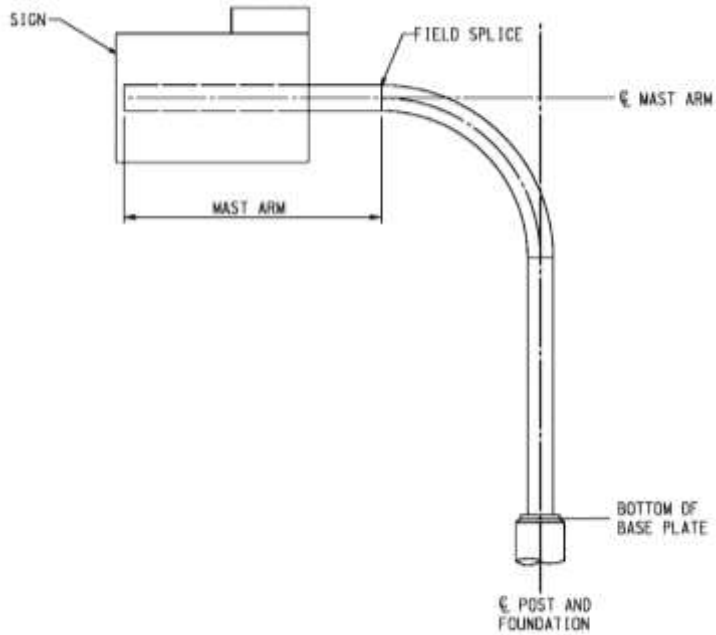

FIGURE 110-1. SINGLE CANTILEVER SIGN STRUCTURE

A butterfly structure, also referred to as a balanced cantilever, (Figure 110-2) consists of a straight post field-spliced to the base of a mast arm; the signage is connected at (or near) the centroid of the sign structure.

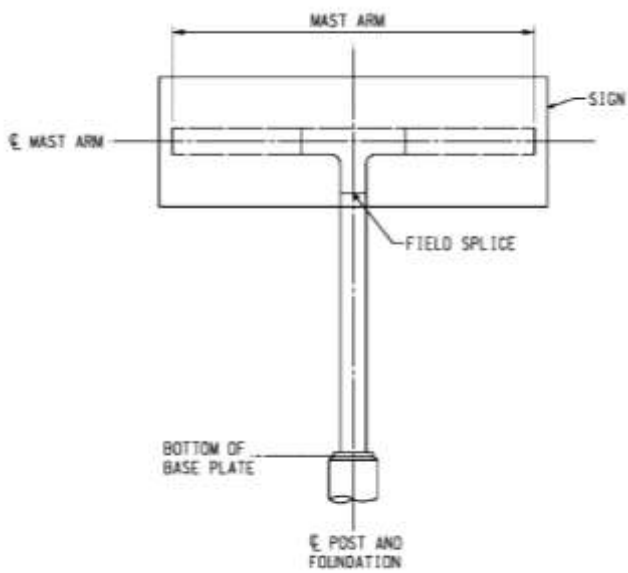

FIGURE 110-2. BUTTERFLY SIGN STRUCTURE

A dual-cantilever structure (also referred to as an unbalanced cantilever [Figure 110-3]) is similar to that of a single cantilever, except that two mast arms project from the center post instead of one. Note that the loads and moment arms can be either balanced or unbalanced around its vertical support.

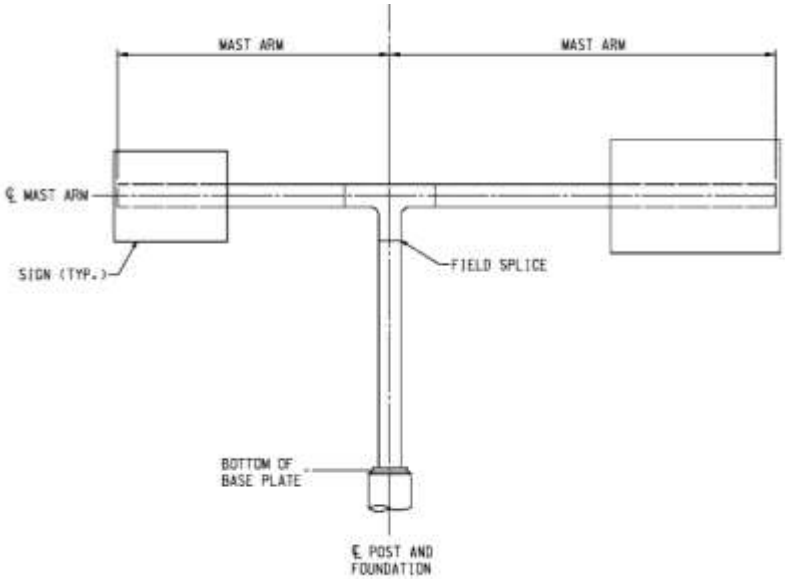

FIGURE 110-3. DUAL-CANTILEVER SIGN STRUCTURE

A butterfly VMS (similar to Figure 110-2) is similar to a butterfly sign structure, except that it supports a VMS instead of a typical roadway sign. VMS-type signs often include service platforms or catwalks; these platforms shall be considered in the design of the sign structure.

110.3.1.2 *Span-Type Sign Structures*

Tubular span-type sign structures consist of three types: (1) **single-mast span-type;** (2) **double-mast span-type;** and (3) **span-type VMS**.

A single-mast span-type structure (Figure 110-4) consists of a single mast arm spanning between two curved posts on each side of the roadway.

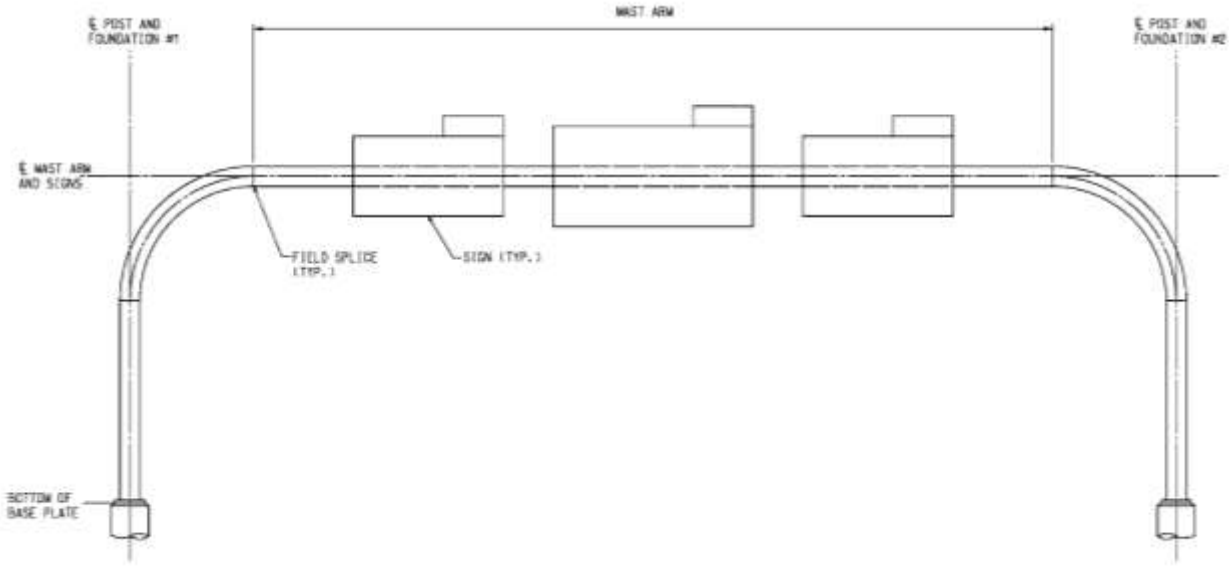

FIGURE 110-4. SINGLE-MAST SPAN-TYPE SIGN STRUCTURE

A double-mast span-type (Figure 110-5), as the name suggests, introduces a second mast arm. When larger signs are required, a double-mast system sign structure is preferred. Sign structures that support sign panels with a height in excess of 17 feet 6 inches are best suited as double-mast systems.

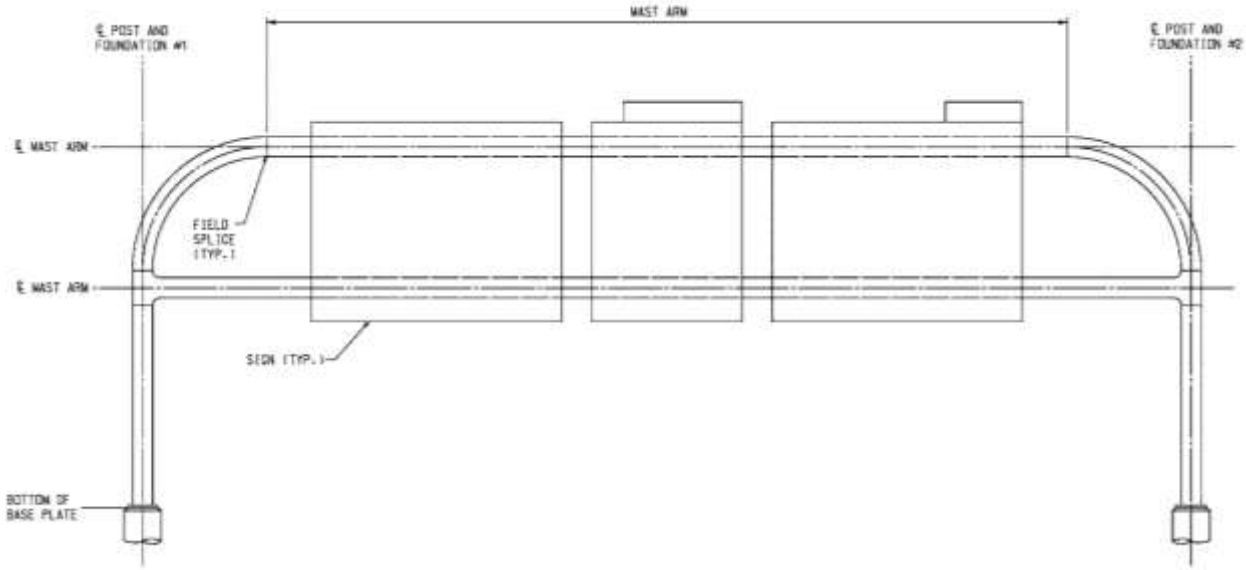

FIGURE 110-5. DOUBLE-MAST SPAN-TYPE SIGN STRUCTURE

Lastly, a span-type VMS is similar in structure to the other span-type structures, except that it supports a VMS (see Figure 110-4 and Figure 110-5). VMS-type overhead signs often include service platforms or catwalks; these platforms shall be considered in the design of the sign structure.

110.3.1.3 *Bridge-Mounted Signs*

Bridge-mounted signs (Figure 110-6) are smaller signs that can be directly attached to a fascia girder and/or bridge parapet, typically by structural angles.

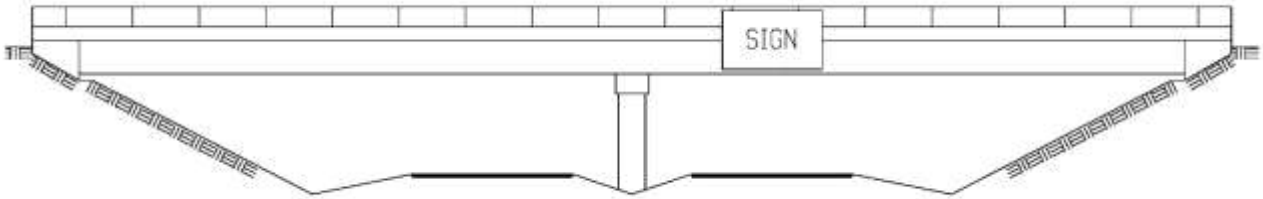

FIGURE 110-6 SIGN FASTENED TO BRIDGE

110.3.2 General Design Considerations

Overhead sign structures can either be bridge or ground-mounted; signs can also be fastened to a bridge fascia directly without the use of a tubular frame. In general, ground-mounted sign structures are preferred.

Bridge-mounted overhead sign structures are to be avoided where practical, especially on bridges with skews in excess of 30 degrees; the Bridge Design Engineer must approve their use. Bridge-mounted overhead sign structures shall be span-type only; and must be supported on—or at least near—pier caps to reduce vibrations in the sign structure, and to minimize the load effects on the fascia girder. In addition, a 6-inch minimum clear dimension shall be maintained between the outside face of the parapet and the sign structure post to prevent vehicular collision damage to the sign support.

For signs fastened directly to the bridge fascia, the lowest point of a sign or its appurtenances must be 1 foot above the bottom of the superstructure to which it is attached. A 2-inch minimum gap shall be maintained between the bridge fascia and the sign. These signs shall be within a 5 degree skew measured perpendicularly to the roadway below; if this cannot be achieved due to the skew of the bridge relative to the lower roadway or other attachment complications, ground-mounted signs shall be used.

For both bridge-mounted overhead sign structures and signs fastened directly to the bridge fascia, special attention must be paid to the connections to the existing structure. When connecting to existing concrete elements, expansion-type and adhesive- or resin-bonded anchors are disallowed due to pullout and long-term creep concerns. Grouted A307/A325 bolts are the preferred alternative. Anchorage to an existing pre-tensioned or post-tensioned concrete fascia girder is prohibited. Additionally, high-strength bolts are required when fastening to a steel fascia girder.

For ground-mounted overhead sign structures, the minimum vertical clearance between the roadway surface and the bottom of the sign structure and/or sign shall be 17 feet 6 inches for both typical signs and VMS; this dimension must be maintained for the full width of the roadway and shoulder. The sign structure posts shall be placed outside the clear zone, as defined in *Section 103.3.4.2.1 – Delaware Clear Zone Concept*. Otherwise, they shall be protected with a properly designed traffic barrier.

For all applicable overhead sign structures, handholes shall be placed away from traffic to minimize exposure to de-icing salts, in case the cover is broken and/or not closed. Handholes shall be at least 3 feet 6 inches above the top of the base plate, and be 6½-inch by 3 inch oval holes with 8-inch by 4½-inch oval covers.

Grout pads between the bottom of the steel base plate and the top of the footing shall be avoided where practical. The grout tends to trap water and chlorides, which leads to corrosion of the anchor rods. An open-base post that is supported directly on the anchor bolt leveling nuts is the preferred connection. A protective wire-mesh screening material shall be used to keep birds and rodents out of the void space. If specific conditions warrant the use of a non-shrink grout pad, the grout shall not be considered load-carrying, and an adequate drainage system shall be provided. The Bridge Design Engineer must approve the use of a grout-leveling pad.

110.3.2.1 *Designer Responsibility*

The designer shall design the entire overhead sign structure in accordance with the design requirements in this section, and prepare a drawing set that includes all materials, connections, and design data. Should DelDOT develop standard drawings and designs for its overhead sign structures, the designer shall conform to those standards. The Engineer of

Record (EOR) is also responsible for preparing and sealing all overhead sign structure drawings.

110.3.2.2 *Materials*

All new overhead sign structures shall consist of steel, tubular sections with a minimum thickness of 1/4 inch. Bolted field splices, bolted base-plates to foundation, and full-penetration shop-welded post-to-base-plate connections are also required for enhanced fatigue performance. All structural steel shall be hot-dip galvanized in accordance with ASTM A123. It is preferable to galvanize sign structure sections in a single dip, as opposed to double-dipping. Double-dipping has caused component failures during the galvanizing process. The designer should discuss with approved local galvanizers their capabilities to single-dip sign structure sections and adjust their design accordingly. A note shall be made on the plans specifying the galvanizing procedure.

Handhole covers shall be made of ASTM A240, Type 302 or Type 304, stainless steel.

Aluminum sections for new structures are not permitted. Aluminum components are only permitted in the rehabilitation of an existing aluminum sign structure.

110.3.2.3 *Loads*

All overhead sign structures, including service platforms and catwalks, shall be designed in accordance with the loading criteria established by the latest edition of *LRFD Specifications for Structural Supports for Highway Signs, Luminaires, and Traffic Signals*.

1. Fatigue evaluation of new sign structures shall be in accordance with *LRFD Specifications for Structural Supports for Highway Signs, Luminaires, and Traffic Signals*, as supplemented by NCHRP *Report 469*.

2. Designs are based on Fatigue Category I for all overhead sign structures.

110.3.2.4 *Consideration for Future Conditions*

Where feasible, the design of an overhead sign structure shall accommodate future roadway widening, as designated by DelDOT, so that replacement is not required prior to the end of its intended design life. The Traffic Section is responsible for determining the need, size, type, and location of sign panels to be supported by the sign structure, and evaluating whether future sign panel size increases are likely. If changes are expected, the designer shall accommodate the larger of either the current or future sign panel area. To achieve prolonged functionality, overhead sign structures shall be designed for additional sign area 15 percent greater than expected; and the demand-to-capacity ratio shall not exceed 80 percent for Strength Limit State design.

The designer is permitted to incorporate a Stockbridge-type damper as a means of absorbing energy for any new design of any existing sign structure experiencing excessive vibration.

110.3.3 Design Process

The following steps outline the general procedures when designing an overhead sign structure or VMS sign structure:

1. The Traffic Section determines the size, type, and location (with respect to the roadway) of sign panels, or VMS assembly to be supported by the sign structure.

2. Locate the sign foundation(s) to adequately place them outside of the roadway clear zone where practical. Note that bridge-mounted sign structures are not desirable, and require approval from the Bridge Design Engineer.

3. Locate existing and proposed utilities in the area of the sign, and coordinate installation and tie-in of electric, ITS, etc., when required.

4. Determine the required span length and sign-panel height based on the minimum required horizontal and vertical clearances, as well as sign-panel dimensions.

5. Determine the most appropriate sign structure type based on the design considerations outlined in this section. If using an overhead-type sign structure, determine if a single- or double-mast sign structure is needed based on the sign-panel height.

6. Determine post heights. The post height is measured from the bottom of base plate to the centerline of the horizontal mast arm (the lowest mast arm for a double-mast sign structure).

7. Design and detail the structure in accordance with *Section 110.3.2 – General Design Considerations* and *Section 110.3.3 – Design Process*.

8. Complete the overhead sign structure plan set by providing all applicable design criteria and details for the following: materials, design sections, splice and base plate connections, foundation data, catwalk framing and connections, and vibration mitigation.

110.3.4 Foundations

Specific geotechnical and foundation design issues are addressed in *Section 105 – Geotechnical Investigations* and *Section 107 – Final Design Considerations – Substructure* of this Manual.

110.4 Sound Barrier Walls

Noise abatement measures are often used when new construction or widening of an existing roadway results in highway noise impacts to the surrounding community. DelDOT Policy Implement No. D-03 “Highway Transportation Noise Policy” (DelDOT Policy No. D-03, 2011) shall be consulted for determining how and under what circumstances highway- and construction- generated noise shall be mitigated. The feasibility and reasonableness of sound barrier walls as a noise abatement measure is evaluated by this document.

The following measures are typically considered by DelDOT in the design phase: sound barriers (either walls, berms, or a combination), alteration of roadway alignment, traffic management measures, and acquisition of real property for buffer zones. The focus of this subsection is the structural design considerations for sound barrier walls.

The design criteria for these walls are typically separated in two categories: bridge-mounted, and ground-mounted. Bridge-mounted sound barrier walls are fastened to an existing or new

bridge structure, typically along its fascia. Ground-mounted sound barrier walls are supported on the ground by foundations, and are typically outside the clear zone.

This section identifies the key issues in the design of sound barrier walls to assist engineers in preparing design drawings. The major focus is on the design criteria and detailing procedures for new sound-barrier wall structures. Because Delaware does not currently own any sound barrier walls, rehabilitation of existing sound barrier walls is not applicable, and therefore will not be addressed herein.

110.4.1 Design Criteria

The subsections herein are specifically based on the information documented in one primary reference: AASHTO LRFD as modified by this Manual. Additional nonstructural design considerations, such as wall aesthetics and acoustics, are addressed in FHWA *Highway Noise Barrier Design Handbook* (2011).

110.4.1.1 *Designer Responsibility*

The Bridge Design Engineer and/or the design consultant are to perform a noise study in accordance with DelDOT Policy No. D-03 to determine if a sound barrier wall is warranted. The required height, length, offset, foundation type, wall material types, and geometry of the sound barrier wall to mitigate the noise impact shall be determined in this stage. Sound-barrier wall aesthetics and possibly material type will be coordinated with DelDOT and the public.

Coordination with utilities, right-of-way clearances, and environmental impacts shall be considered in the design, geometry, and location of the sound barrier wall. The Bridge Design Engineer must approve the preliminary sound-barrier wall parameters outlined above before the designer begins final design.

The designer shall design the entire structure in accordance with the design requirements in this section, and prepare a drawing set that includes all materials, connections, and design data. The EOR is responsible for preparing and sealing all sound-barrier wall drawings.

110.4.1.2 *General Criteria*

In general, ground-mounted walls are preferred to bridge-mounted.

Bridge-mounted sound barrier walls shall be avoided due to additional loading placed on the bridge, additional live load vibration consideration in the sound barrier wall, and proximity to potential traffic-impact damage. The Bridge Design Engineer must approve their use.

Height range for a bridge-mounted sound barrier wall (measured from top of bridge barrier to top of wall) is typically 4 feet minimum to 10 feet maximum. Height range of a ground-mounted sound barrier wall (measured from finished grade elevation to top of wall) is typically 4 feet minimum to 30 feet maximum. Heights of ground-mounted sound barrier walls may be reduced by using earthen berms in conjunction with the sound barrier wall. A minimum height is required to allow for emergency and maintenance access doors to be placed in the area of a single panel, as outlined in Section 15.4.3 of AASHTO LRFD. Post spacing shall be limited to a maximum spacing of 10 feet for bridge-mounted walls, and 20 feet for ground-mounted walls.

Design of bridge-mounted sound barrier walls shall be done with consideration for bridge inspection and maintenance access. The total dead load and wind load per linear foot shall be noted on the bridge plans, and shall be considered in the design of the new bridge or the evaluation of an existing bridge. Bridge-mounted sound barrier walls shall also be designed to account for bridge expansion and contraction movements (see *Section 110.4.1.4 – Detailing Connections*).

Ground-mounted sound barrier walls shall also be outside of the roadway clear zone, unless dictated by site conditions and/or determined by DelDOT. If the sound barrier wall is within the roadway clear zone, it shall be protected by a properly designed traffic barrier.

110.4.1.3 *Materials*

Sound barrier walls are typically post-and-panel systems where the panels span between evenly spaced vertical posts. The posts are either supported by a foundation system (ground-mounted) or a component of a bridge fascia (bridge-mounted). Precast concrete panels and rolled-beam steel posts are the preferred sound-barrier-wall system in Delaware; although, other materials and systems are acceptable depending on the specific project parameters. For instance, corrugated metal or lightweight concrete panels with steel posts may be suitable for bridge-mounted walls to reduce dead load on the existing structure. Cast-in-place or precast concrete posts can also be used for ground-mounted sound barrier walls. Proximity to roadway salt spray exposure should be considered in the wall material selection.

All exposed steel, including posts and hardware, shall be galvanized or painted. Anchor bolts, if used, must conform to the ASTM F1554 Grade 55 or 105 specifications.

In general, concrete sound barrier wall panels shall be 8 inches thick at a minimum, with 1.5 inches of concrete cover. Two layers of reinforcement shall be detailed on both faces. Welded-wire fabric is an accepted alternative. This requirement is applicable to precast concrete panels, as well as self-consolidating cast-in-place concrete panels. For conventional cast-in-place concrete, the minimum thickness is increased to 8 inches, with 2 inches of concrete cover.

110.4.1.4 *Detailing Connections*

Concrete panels are typically connected to steel or concrete posts with compression clamps; metal panels are connected with self-tapping screws. In either case, the designer must provide allowance for expansion of the walls at the joints, as outlined in Section 15.6 of AASHTO LRFD.

As stated above, mounting sound-barrier-wall structures to an existing bridge fascia can be complex. Bridge-mounted sound barrier walls shall be mounted directly to the top of the parapet or to the outside face of the parapet to mitigate vehicular collision effects. Integrally cast anchor bolts are the preferred connection to the parapet. If a sound barrier wall is to be mounted on an existing parapet, use grouted A307/A325 bolts. Epoxy or resin-bonded adhesive and expansion-type anchors are not permitted due to pullout concerns. Use a ½-inch-minimum thickness closed-cell neoprene sponge (CCNS) bearing pad between the post base and the top of the bridge parapet to mitigate vibration.

Bridge-mounted sound barrier walls shall use steel posts with lock nuts or lock washers due to the vibrations of the bridge. Also, the designer shall incorporate provisions in the design of

bridge-mounted walls to prevent the wall from falling below, whether due to traffic impact or wall failure. This can be accomplished using a cable system along the sound barrier wall (cables or wire rope embedded in each panel running between and connected to the steel posts).

For ground-mounted sound barrier walls, steel posts shall be either embedded in the concrete foundation wall/shaft, or anchor-bolted to a base plate cast in the top side of the foundation. Bottom panels for ground-mounted sound barrier walls shall be embedded into the ground a minimum of 6 inches.

110.4.1.5 *Loads*

All sound barrier walls, bridge- or ground-mounted, shall be designed in accordance with the loading criteria established in AASHTO LRFD. Note that wind pressures derived from this reference are applied uniformly across the post-and-panel system. The panels shall be designed as simply supported spans between posts, unless the designer can justify a more rigid end connection. For bridge-mounted sound barrier walls, the additional dead- and wind-load forces shall also be considered in new bridge superstructure design, as well as evaluation of an existing structure.

110.4.1.6 *Miscellaneous*

Any alternate designs and details not identified in this subsection shall be evaluated, presented to, and approved by the Bridge Design Engineer. For other structural design considerations not presented in this section, such as proper drainage for ground-mounted walls and collision loads, refer to AASHTO LRFD for design guidance. For other general considerations, refer to *Highway Noise Barrier Design Handbook*.

Sound-absorptive panels may be required to reduce reflective sound when sound barriers are on both sides of a roadway and spaced closer than 100 feet and if required by the noise study.

Aesthetic considerations and architectural treatments shall be coordinated with and approved by DelDOT. This includes items such as texture, surface finish, stain, anti-graffiti coatings, and sealants.

Sight-distance obstruction on horizontal curves shall be considered in the design and location of sound barrier walls.

110.4.2 Foundations

Specific geotechnical and foundation design guidelines are addressed in *Section 105 – Geotechnical Investigations* and *Section 107 – Final Design Considerations – Substructure* of this Manual.

110.5 References

AASHTO, 2015. *LRFD Specifications for Structural Supports for Highway Signs, Luminaires, and Traffic Signals*, 1st Edition.

AASHTO 2014. *LRFD Bridge Design Specifications*, 7th Edition.

DelDOT, 2011. *Delaware Manual of Uniform Traffic Control Devices*

DelDOT, 2011. Policy Implement No. D-03 “Highway Transportation Noise Policy” (DelDOT Policy No. D-03).

FHWA, 2009. *Manual of Uniform Traffic Control Devices.*

FHWA, 2011. *Highway Noise Barrier Design Handbook*.

Section 111 Construction Coordination

111.1 Working Drawings

Working drawings submitted for acceptance shall be prepared by the contractor in accordance with the requirements of the Plans, Department Standards, Special Provisions and Standard Specifications. Working drawing review is conducted to ensure that fabrication of items is in accordance with the intent of the Contract Documents. Working drawings shall be properly reviewed and accepted before fabrication begins.

Working drawings include, but are not limited to, stress sheets, fabrication drawings, erection plans, falsework plans, formwork plans, cofferdam plans, bending diagrams for reinforcing steel, or any other supplementary plans or similar data that the contractor is required to submit to the Engineer for approval.

111.1.1 Required Working Drawings

Unless stated otherwise in the Contract Documents, the following items routinely require submission of working drawings:

1. Fabricated structural steel including, but not limited to, the following:
    a. Primary and secondary members, such as girders, trusses, beams, framing systems, cross bracing, diaphragms, and stringers
    b. Expansion joints
    c. Sign structures
2. Pre-tensioned, pre-post-tensioned, and post-tensioned concrete beams and panels
3. Permanent metal deck forms
4. Metal plate culverts
5. Precast concrete culverts, Three-sided Frames and Arches
6. Precast deck sections –Pretensioned, post-tensioned, or reinforced concrete
7. Timber bridges
8. Proprietary retaining walls
9. Shear Stud details

10. Light poles
11. Protective fence and protective shields
12. Bridge bearings (all types)
13. Bridge demolition plans
14. Temporary excavation support systems
15. Temporary protective shields
    a. Temporary jacking towers, supports, and falsework
    b. Reinforcing bars for cast-in-place concrete elements
    c. Erection Plan, as per Standard Specifications
    d. Piles and pile-splicing (H-pile; precast, prestressed concrete; and steel shell pipe)

111.1.2 Working Drawings Review Procedure

Working drawings shall be submitted for each structure individually (items pertaining to the same Bridge Number). This procedure will facilitate bookkeeping and minimize confusion during record storage. Each drawing must contain a title block in the lower right-hand corner indicating the county, route, contract number, specific Contract item number and specification reference, name of the contractor, name of the Supplier, title of drawing, sheet number, bridge ID number, initials of the drawer, initials of the checker, and date of the drawing.

A record log of working drawing submissions should be prepared and maintained throughout the course of a project's construction. At a minimum, the record log should include the name and revision number of the submission, applicable contract specification, date the submission was received by the Department, the reviewer's name, the disposition of the submission and the date the submission was returned to the contractor (or supplier).

Working drawings shall be submitted by the contractor in accordance with the Standard Specifications. The initial submissions of the working drawings can be made in electronic format (Adobe Acrobat Portable Document File [PDF] is required) using compact discs, a project-specific FTP website, or via e-mail, all as approved by the Department. Once the submission is approved and released for fabrication, the contractor shall submit hard copies of the working drawings in quantities as requested by the Department for their record keeping.

The working drawings shall be reviewed for general conformity against the Contract Documents, including contract revisions, all addenda up to the date of the review, and any previously reviewed and commented-on versions of the working drawing. When the review is complete, the reviewer will add comments, corrections, and a review stamp. The returned working drawings will be stamped as follows:

1. *Returned for Resubmission* – in this case, revisions or corrections must be made, and the drawings resubmitted for review.

2. *Reviewed for General Conformity with Plans and Specifications* – in this case, if the contractor agrees with the comments, the comments shall be incorporated, and a resubmission is not required.

The words "As Noted" should be marked immediately above the review stamp on each page of the drawing containing any marking, note, or corrections written by the drawing reviewer.

All review stamps shall include the reviewer's full name (not just initials), and shall be date-stamped.

Only after all drawings are stamped "Reviewed for General Conformity with Plans and Specifications," can material requisition and fabrication commence. If any of the drawings in a working drawing submission are stamped "Returned for Resubmission," notify the supplier (and the contractor) of the situation and arrange to have the entire working drawing submission corrected and resubmitted until all working drawings of the submission are found to be satisfactory.

Approved working drawings of structural elements must be submitted to the Bridge Management Engineer for inclusion in the Bridge Inspection File.

In accordance with the Standard Specifications, reviewed working drawings, submittals, or resubmittals will be transmitted to the contractor within 45 days from the date of receipt by the Department.

111.1.2.1 *Consultant Review of Working Drawings*

On Consultant-designed projects, the prime consultant has the primary responsibility for the process and review of working drawings. The review procedure will adhere to the criteria provided above and as modified herein.

If the prime consultant also employs a subconsultant for review of working drawings, the subconsultant's review stamp is required following their review of the documents. Subsequently, the prime consultant shall affix their review stamp after they perform a QA review.

All consultant firms providing working drawing review services, either prime consultants or subconsultant, should implement a quality control process to provide a complete review of the working drawings by individuals knowledgeable in the work. The QC process should be submitted to the Department prior to the start of the working drawing review effort.

All consultant review stamps should include the full name of the reviewer (not just initials), the firm's name and date stamped.

The final stamp by the prime consultant should read "Reviewed for General Conformity with Plans and Specifications for DelDOT."

111.1.3 Technical Guidelines for Review of Working Drawings

The following contains technical guidelines for the review of working drawings based on the submitted item(s). This list is not all–inclusive, but should be used as guidance during the review of any working drawing:

1. Fabricated Structural Steel: shall be reviewed in accordance with the *Shop Detail Review/Approval Guidelines* (2000) developed by the AASHTO / National Steel Bridge Alliance (NSBA) Steel Bridge Collaboration.

   a. Expansion Joints

      A "Temperature-Joint Opening" chart ranging from 0 °F to 120 °F in 10-degree increments must be shown on the working drawings for expansion joints.

   b. Bridge Railings and Protective Fences

      Check that railings and fences are spliced at bridge expansion joints. Confirm fence-post spacing is indicated. Ensure that all steel hardware complies with the requirements of the Standard Specifications.

   c. Bridge Bearings

      Check the orientation of the bearings, both relative to the girder, and to bearing components.

      Check that the materials, surface finishes, and details for pot bearings are in conformance with the Contract Documents.

      For laminated elastomeric bearings, check for size, total thickness, layers of neoprene, number of shims, hardness of neoprene, and skew and clip, if any.

   d. Pre-Tensioned and Post-Tensioned Concrete Beams and Panels

      The working drawings must show a framing plan for the entire structure, including proper beam identification for each beam. The force and eccentricity for all beams must conform to the design drawings. Deviations must be substantiated by calculations submitted by the fabricator with the working drawings.

      Check the beam lengths and continuity details for conformance with the Contract Documents.

      Concrete release strength and 28-day compressive strength must be shown on the working drawings, as well as strand patterns and all cast-in hardware, voids, or other components.

      Check that the tensile stresses in the top fiber of beams at the centerline of bearing are within tolerances or have been reduced to within allowable stresses by either unbonding, or unbonding supplemented with mild reinforcement.

      Check that shear reinforcement is properly spaced and sized in the beams.

      Check insert sizes and locations in the beams (i.e., inserts for attachment of diaphragms, utility supports, lighting fixtures)

   e. Permanent Metal Deck Forms (SIP Forms)

Check that the furnished formwork provides sufficient section modulus and moment of inertia for the required span length (Center-to-center of beams less the flange width)

Confirm that formwork supports are not welded to flanges in tension zones.

f. Proprietary Retaining Walls (MSE Walls, Bin-Type Walls)

Check general dimensions for lines, grade, and product elements.

Confirm backfill materials are consistent with information contained in the Plans, Special Provisions, and/or Standard Specifications.

Check local wall stability calculations and confirm they coordinate with the global stability calculations prepared by the project's designer and the geotechnical and loading requirements of the contract documents, including anticipated settlement.

Confirm the construction sequence of the wall coordinates with that of the contract documents, including geotechnical quarantine periods and staged construction methods.

g. Proprietary Precast Concrete Arch Culverts (e.g., ConSpan)

Check the section lengths for conformance with the Contract Documents.

Concrete 28-day compressive strength must be shown on the working drawings, as well as reinforcement locations and all cast-in hardware, voids, or other components.

Check that reinforcement is properly spaced and sized.

Check insert sizes and locations in the sections (i.e., inserts for attachment of utility supports, lighting fixtures).

111.2 Contractor Requests for Information

During construction, the contractor may require clarification of the design intent, additional information, and/or approval of a minor variance from the Contract Documents. These questions are generally submitted by way of a Request for Information (RFI).

A record log of all RFI submissions should be prepared and maintained throughout the course of a project's construction. At a minimum, the record log should include a brief description of the RFI, applicable contract specification, date the submission was received by the Department, the reviewer's name, the disposition of the submission, and the date the submission was returned to the contractor (or supplier). A number identifier of the RFI must also be shown.

The review and processing of RFI responses must be time-sensitive. In general, RFI responses should be prepared and returned to the contractor within 5 working days. If more than 5 days are required to investigate and complete an RFI response, the contractor should be advised as to the time required within the 5-day period.

111.3 Value Engineering Proposals (by Contractor)

Value Engineering Proposals by the contractor shall be submitted and reviewed in accordance with the Standard Specifications.

111.4 Plan Revisions

Plan revisions are design changes that are made during construction. These changes may require change orders approved by the contractor and the Department. Plan revisions will also require review by the FHWA on PoDI oversight projects.

Items that must be issued as a Plan Revision include:

1. Changes requiring recomputation of hydrology and hydraulics;
2. Changes to the roadway pavement box section;
3. Changes in profile or alignment;
4. Safety-related changes;
5. Changes requiring additional right-of-way, easement areas, or impacts to wetlands and subaqueous areas;
6. All bridge changes, except quantity changes and foundation stabilizations not related to spread-footing bearing;
7. New specifications for materials;
8. Other items, if approved by the Construction Engineer.

All plan revisions shall begin by crossing out the erroneous or modified information, clouding the correct information, and marking the corrections with a revision designator (i.e., R1, R2). No information should be deleted or erased. The revision block (in the title block) should be used to indicate the nature of the revision; the initials of the responsible persons for drafting, checking, and recommending the revision; and the recommendation date. Revisions should be numbered consecutively for the contract (i.e., If plan revision R3 is issued and it affects plan sheet 10, it shall be numbered as R3 even though it may be the first change to that particular sheet.).

Additional information related to plan revisions is contained in the "Plan Revision Guidelines," located on the DRC – *Project Management Tab*.

111.5 As-Built Drawings

Frequently, changes are made in some aspects of the design during construction. The DelDOT Resident Construction Engineer is responsible for recording these changes on a record plan set during construction. These record plans are then provided to the DelDOT Archive Section for incorporation into the "As-Built" plan set. All changes are incorporated in the same fashion as indicated in *Section 111.4 – Plan Revisions*.

111.6 References

AASHTO and NSBA, 2000. *Shop Detail Review/Approval Guidelines,* Developed by the AASHTO/NSBA Steel Bridge Collaboration.

DelDOT, 2015. *Standard Specifications for Road and Bridge Construction*, December.

This page intentionally left blank.

SECTION 200
DELDOT PREFERENCES TO AASHTO MANUAL

The *DelDOT Bridge Design Manual* contains the following sections:

Detailed Tables of Contents precede each section.

INTENTIONALLY LEFT BLANK

SECTION 200 PREFACE

Section 200 follows the AASHTO LRFD article numbering system.

Designation	Meaning
Suffix D	Designates "Delaware Article." Indicates the addition of a new article and appears at the end of the new article number.
Prefix A	Used for all references to *AASHTO LRFD Bridge Design Specifications* sections, articles, equations, figures, or tables.
Prefix AC	Used for all references to AASHTO commentary.
No prefix	Used for references to sections within this manual.
Prefix C	Used for references to commentary to sections within this manual.

INTENTIONALLY LEFT BLANK

SECTION 201 INTRODUCTION

TABLE OF CONTENTS

INTENTIONALLY LEFT BLANK

SECTION 201 INTRODUCTION

SPECIFICATIONS

COMMENTARY

201.3—DESIGN PHILOSOPHY

201.3.3—Ductility

The following shall replace the third paragraph of A1.3.3:

For the strength limit state:

$\eta D \geq$ 1.05 for nonductile components and connections

$=$ 1.00 for all other designs and details

For all other limit states:

$\eta D =$ 1.00

201.3.4—Redundancy

The following shall replace the second paragraph of A1.3.4.

For the strength limit state:

$\eta_R \geq$ 1.05 for nonredundant members

$=$ 1.00 for all other designs and details

For all other limit states:

$\eta_R =$ 1.00

C201.3.4

The following shall replace the second paragraph of AC1.3.4:

Single cell box girders and single column bents shall be considered to be non-redundant members.

201.3.5—Operational Importance

The following shall replace the second paragraph of A1.3.5:

For all bridges, the operational importance load modifier, η_I, shall be taken as 1.0.

The third paragraph of A.1.3.5 shall be deleted.

C201.3.5

The second (last) paragraph of AC1.3.5 shall be deleted.

INTENTIONALLY LEFT BLANK

SECTION 202 GENERAL DESIGN AND LOCATION FEATURES

TABLE OF CONTENTS

INTENTIONALLY LEFT BLANK

SECTION 202 GENERAL DESIGN AND LOCATION FEATURES

SPECIFICATIONS

COMMENTARY

202.3—LOCATION FEATURES

202.3.3—Clearances

202.3.3.4—Railroad Overpass

The following shall supplement A2.3.3.4:

Railroad overpasses shall meet the minimum horizontal and vertical clearances as stipulated in Section 103.3.4.3 – Over Railroads and Section 103.3.5.3 – Over Railroads herein.

202.5—DESIGN OBJECTIVES

202.5.2—Serviceability

202.5.2.6—Deformations

202.5.2.6.2—Criteria for Deflection

The deflection control provisions of A2.5.2.6.2 shall apply to all bridge designs as modified below:

The following shall replace the third bullet of the third paragraph:

- For composite design, the design cross-section should include the entire width of the roadway, neglecting any stiffness contribution by barriers, railings, or other secondary members of the bridge.

202.5.2.6.3—Optional Criteria for Span-to-Depth Ratios

The span-to-depth ratio provisions of A2.5.2.6.3 shall apply to all bridge designs.

C202.5.2.6.2

The following shall supplement AC2.5.2.6.2:

The weight of barriers, railings, or other secondary members shall be included for deflection and design. Only the stiffness of these items should be neglected.

202.5.2.7—Consideration of Future Widening

202.5.2.7.1—Exterior Beams on Multi-Beam Bridges

The following shall replace A2.5.2.7.1:

The load-carrying capacity of exterior beams shall not be less than the load-carrying capacity of an interior beam unless specifically approved by the Bridge Design Engineer.

C202.5.2.7.1

The following shall supplement AC202.5.2.7.1:

The stiffness of the interior and exterior beams should be relatively equal.

SPECIFICATIONS

COMMENTARY

202.6—HYDROLOGY AND HYDRAULICS

202.6.3—Hydrologic Analysis

The following shall supplement A2.6.3:

Hydrologic analysis shall be completed in accordance with Section 104 – Hydrology and Hydraulics.

202.6.4—Hydraulic Analysis

202.6.4.1—General

The following shall supplement A6.4.1:

Hydraulic analysis shall be completed in accordance with Section 104 – Hydrology and Hydraulics.

202.6.6—Roadway Drainage

202.6.6.2—Design Storm

The following shall replace A6.4.1:

The design storm for bridge deck drainage shall be determined in accordance with Section 104 – Hydrology and Hydraulics herein and Section 6.3 – Design Criteria of the *Road Design Manual*.

202.6.6.4—Discharge from Deck Drains

The deck drain provisions of A2.6.6.4 shall apply to all bridge designs, but as modified below.

The following shall replace the first bullet of the second paragraph:

- All free-falling pipes from deck drains shall extend a minimum of 8 inches below any superstructure element within a 10-foot radius of the deck drain.

SECTION 203 LOADS AND LOAD FACTORS

TABLE OF CONTENTS

INTENTIONALLY LEFT BLANK

SECTION 203 LOADS AND LOAD FACTORS

SPECIFICATIONS

COMMENTARY

203.4—LOAD FACTORS AND COMBINATIONS

203.4.1—Load Factors and Load Combinations

The following shall supplement the Strength II description in A3.4.1:

Permit loads to be considered are illustrated in Section 108 – Bridge Load Rating. Refer to Figure 108-4. Permit Load Vehicle Axle Loadings and Spacings.

The following shall modify Table A3.4.1-1:

In evaluation of the Service III Load Combination, the Live Load (*LL*) Load Factor shall be taken as 1.0.

Delete Table A3.4.1-4.

203.4.3—Load Factors for Jacking and Post-Tensioning Forces

203.4.3.1—Jacking Forces

The following shall replace the first paragraph of A3.4.3.1:

Hydraulic jacks shall be sized by applying a factor of 1.65 to the unfactored permanent loads.

All jacking elements, excluding the hydraulic jacks, shall be designed using the provisions of AASHTO LRFD with the following exceptions:

- Design for fatigue need not be considered.
- Design for seismic loads need not be considered.
- A load factor of 1.3 shall be applied to dead loads in place of the load factor given in Table A3.4.1-2.

C203.4.3.1D

The 1.65 factor used for sizing hydraulic jacks is the product of a load factor equal to 1.5 and a factor to account for the “sticky force” of the bearings equal to 1.1.

203.6—LIVE LOADS

203.6.1—Gravity Loads: LL and PL

203.6.1.1—Vehicular Live Load

203.6.1.1.2—Multiple Presence of Live Load

C203.6.1.1.2

SPECIFICATIONS

Delete the third paragraph.

203.6.1.3—Application of Design Vehicular Live Loads

203.6.1.3.2—Loading for Optimal Live Load Deflection Evaluation

The following shall replace the first paragraph of A3.6.1.3.2:

The deflection control provisions of A2.5.2.6.2 shall apply to all bridge designs as modified by 202.5.2.6.2 herein.

203.6.1.6—Pedestrian Loads

The following shall replace A3.6.1.6:

A pedestrian load of 0.075 ksf shall be applied to all sidewalks wider than 2.0 feet and considered simultaneously with the vehicle design live load. The pedestrian load is distributed using the lever rule.

When the pedestrian load is required, two loading conditions shall be considered. The first loading condition assumes that the sidewalk is not present (i.e., an extended roadway surface and barrier would replace the sidewalk area) and that the bridge is used for vehicular live load only. For the second loading condition, the pedestrian load is present and the vehicular live load is factored at a reduced level. Load factors for Strength I shall be 1.45 for live load and 1.75 for pedestrian load.

203.7—WATER LOADS: WA

203.7.1—Static Pressure

The following shall replace the second paragraph of A3.7.1:

For structures that do not span or that are not adjacent to a waterway, the design water level shall be assumed to be coincident with the invert elevation of the structure's weep holes.

For structures that do span or that are adjacent to a waterway, the design water level shall be assumed to be coincident with the water elevation of the applicable design storm.

COMMENTARY

Delete the third through fifth paragraphs.

C203.6.1.3.2

Both paragraphs in AC203.6.1.3.2 shall be deleted.

C203.6.1.6

The following shall replace AC3.6.1.6:

The simultaneous occupancy by a dense loading of people combined with a 75-year design live load is remote.

SPECIFICATIONS

COMMENTARY

203.10—EARTHQUAKE EFFECTS: EQ

203.10.5—Operational Classification

The following shall supplement A3.10.5:

For the purpose of evaluating seismic design parameters, all bridges within the State of Delaware shall be considered "Essential" bridges.

203.10.6—Seismic Performance Zones

The following shall replace A3.10.6:

All bridges within the State of Delaware are considered to be within Seismic Zone 1 with a corresponding Acceleration Coefficient, $S_{D1} \leq 0.15$.

203.12—FORCE EFFECTS DUE TO SUPERIMPOSED DEFORMATIONS: *TU, TG, SH, CR, SE, PS*

203.12.2—Uniform Temperature

The following shall replace A3.12.2:

The design thermal movement associated with a uniform temperature change shall be calculated using Procedure A.

203.14—VESSEL COLLISION: CV

203.14.2—Owner's Responsibility

The following shall supplement A3.14.2:

During the TS&L/Preliminary Design Phase of the bridge design, the designer shall engage the Bridge Design Engineer in discussions related to the site-specific vessel, degree of damage, and protective systems warranted for a particular project.

203.14.16—Security Considerations

The following shall supplement A3.14.16:

During the TS&L/Preliminary Design Phase of the bridge design, the designer shall engage the Bridge Design Engineer in discussions related to the establishment of the size and velocity of the vessel to be used in the bridge security analysis for a specific site.

This page intentionally left blank.

SECTION 204 STRUCTURAL ANALYSIS AND EVALUATION

TABLE OF CONTENTS

INTENTIONALLY LEFT BLANK

SECTION 204 STRUCTURAL ANALYSIS AND EVALUATION

SPECIFICATIONS

COMMENTARY

204.4—ACCEPTABLE METHODS OF STRUCTURAL ANALYSIS

The following shall supplement the computer programs description in A4.4:

The use of computer programs shall be governed by Section 101.7 – Computer Software herein.

204.6—STATIC ANALYSIS

204.6.2—Approximate Methods of Analysis

204.6.2.1—Decks

204.6.2.1.9—Inelastic Analysis

C204.6.2.1.9D

Cases where inelastic finite element analysis or yield line analysis can be used include:

- The design of decks with irregular geometry (e.g., the acute corner of a highly skewed deck where approximate methods cannot accurately depict the deck's behavior).
- The design of the deck overhang subjected to a vehicle collision event.

204.6.2.2—Beam-Slab Bridges

204.6.2.2.1—Application

The following shall be deleted:

Fourth row in Table A4.6.2.2.1-3 (Equation Parameters: I/J).

INTENTIONALLY LEFT BLANK

SECTION 205 CONCRETE STRUCTURES

TABLE OF CONTENTS

INTENTIONALLY LEFT BLANK

SECTION 205 CONCRETE STRUCTURES

SPECIFICATIONS

COMMENTARY

205.4—MATERIAL PROPERTIES

205.4.2—Normal Weight and Structural Lightweight Concrete

205.4.2.1—Compressive Strength

The following shall replace A5.4.2.1:

For each component, the specified compressive strength, f'_c, or the class of concrete shall be shown in the contract documents.

Design concrete strengths above 10.0 ksi for normal weight concrete shall be used only when allowed by specific Articles or when physical tests are made to establish the relationships between the concrete strength and other properties. Specified concrete with strengths below 2.4 ksi should not be used in structural applications.

The specified compressive strength for prestressed concrete and decks shall not be less than 4.0 ksi.

For lightweight structural concrete, air dry unit weight, strength, and any other properties required for the application shall be specified in the contract documents.

C205.4.2.1

The following shall replace AC5.4.2.1:

The evaluation of the strength of the concrete used in the work should be based on test cylinders produced, tested, and evaluated in accordance with Section 8 of the *AASHTO LRFD Bridge Construction Specifications*.

Section 8 was originally developed based on an upper limit of 10.0 ksi for the design concrete compressive strength. As research information for concrete compressive strengths greater than 10.0 ksi becomes available, individual Articles are being revised or extended to allow their use with higher-strength concretes. Appendix C5 contains a listing of the Articles affected by concrete compressive strength and their upper limit.

It is common practice for the specified strength to be attained 28 days after placement. Other maturity ages may be assumed for the design and specified for components that will receive loads at times appreciably different than 28 days after placement.

It is recommended that the classes of concrete shown in Table C5.4.2.1-1 and their corresponding specified strengths be used whenever appropriate. The minimum mix design compressive strength shall be in accordance with Standard Specifications Section 812.04.

The classes are intended for use as follows:

- Class A concrete is generally used in barriers, exposed abutments, stems, backwalls, wingwalls, and all cast-in-place culvert concrete.
- Class B concrete is used in unexposed abutments and unexposed wingwall footings.
- Class C concrete is used for the replacement of unsuitable material below foundations.
- Class D concrete is used in cast-in-place decks, precast non-prestressed deck slabs, approach slabs, and deck rehabilitation overlays.

SPECIFICATIONS

For concrete Class A used in or over saltwater, the W/C ratio shall be specified not to exceed 0.45.

COMMENTARY

Strengths above 5.0 ksi should be used only when the availability of materials for such concrete in the locale is verified.

Lightweight concrete is generally used only under conditions where weight is critical.

In the evaluation of existing structures, it may be appropriate to modify the f'_c and other attendant structural properties specified for the original construction to recognize the strength gain or any strength loss due to age or deterioration after 28 days. Such modified f'_c should be determined by core samples of sufficient number and size to represent the concrete in the work, tested in accordance with AASHTO T 24M/T 24 (ASTM C42/C42M).

Table C5.4.2.1-1 – Concrete Design Compressive Strength by Class

Class of Concrete	Design Compressive Strength, f'_c (ksi)
A	4.5
B	3.0
C	2.0
D	4.5
Precast Concrete*	5.0
Precast Prestressed Concrete	5.0 to 10.0 (8.0 typically**)

*Non-prestressed concrete should typically be cast using concrete with f'_c = 5.0 ksi.
**Prestressed concrete shall typically use 8.0 ksi concrete unless economic advantage can be demonstrated for the use of lower or higher strength concrete. The use of concrete with f'_c > 8.0 ksi requires the approval of the Bridge Design Engineer and shall not be greater than 10.0 ksi.

205.4.3—Reinforcing Steel

205.4.3.1—General

The following shall replace the nominal yield strength requirements provided in A5.4.3.1:

The nominal yield strength of reinforcing steel shall be 60.0 ksi. Use of bars with yield strengths other than 60.0 ksi requires approval of the Bridge Design Engineer.

205.4.4—Prestressing Steel

205.4.4.1—General

SPECIFICATIONS

The following shall replace A5.4.4.1 paragraphs 1 and 2 and Table A5.4.4.1-1:

Prestressing strands shall be uncoated high-strength 7-wire low-relaxation strand with a nominal 0.5- or 0.6-inch diameter and should conform to AASHTO M203 270-ksi-grade, low-relaxation strand. The yield strength of prestressing strand, f_{py}, shall be taken as 90 percent of the tensile strength, f_{pu}.

205.7—DESIGN FOR FLEXURAL AND AXIAL FORCE EFFECTS

205.7.3—Flexural Members

205.7.3.6—Deformations

205.7.3.6.4D—Camber of Prestressed Beams

205.7.3.6.4.1D—Camber Due to Prestressing

Camber due to prestressing shall be calculated by Equations 205.7.3.6.4.1D-1, 205.7.3.6.4.1D-2, and 205.7.3.6.4.1D-3 for beams with straight, draped, and debonded strands, respectively.

Straight Strands

$$\Delta_{prestressed} = \frac{P e_s L^2}{8 E_{ci} I} \qquad (205.7.3.6.4.1D\text{-}1)$$

Draped Strands

$$\Delta_{prestressed} = \frac{P L^2 \left[4X^2 (e_n - e_s) + 3 e_s\right]}{24 E_{ci} I} \qquad (205.7.3.6.4.1D\text{-}2)$$

Debonded Strands

$$\Delta_{prestressed} = \frac{1}{8 E_{ci} I}\Big[P_b e_b L^2 + P_1 e_1 [L^2 - (L_t + 2L_1)^2] + P_2 e_2 [L^2 - (L_t + 2L_2)^2] + \cdots P_i e_i [L^2 - (L_t + 2L_i)^2]\Big] \qquad (205.7.3.6.4.1D\text{-}3)$$

for which:

$$P = P_t \left(1 - \frac{\Delta f_s}{100}\right) \qquad (205.7.3.6.4.1D\text{-}4)$$

$$P_{b;1,2\ldots i} = P_{t\ b;1,2\ldots i} \left(1 - \frac{\Delta f_s}{100}\right) \qquad (205.7.3.6.4.1D\text{-}5)$$

where:

e_s = eccentricity at mid-span (in.)
e_n = eccentricity at end of beam (in.)

COMMENTARY

SPECIFICATIONS

e_b = eccentricity at mid-span of full-length bonded strands (in.)
$e_{1,2\ldots i}$ = eccentricity at midspan of debonded group 1,2…i (in.)
E_{ci} = modulus of elasticity of beam concrete at transfer (ksi)
I = moment of inertia of beam (in^4)
L = beam length (in.)
L_t = transfer length (in.)
$L_{1,2\ldots i}$ = distance from centerline of bearing to debonding cutoff points
P = prestressing force at selected time for camber calculations (kips)
P_b = prestressing force at selected time for camber calculations of full-length bonded strands (kips)
P_t = prestressing force at transfer (kips)
P_{tb} = prestressing force at transfer of full-length bonded strands (kips)
$P_{b\ 1,2\ldots i}$ = prestressing force at selected time for camber calculations of debonded group 1, 2…i
$P_{tb\ 1,2\ldots i}$ = prestressing force at transfer of debonded group 1, 2…i
Δf_s = assumed percentage of prestressing loss since transfer for selected time
X = percent of L for drape point

205.7.3.6.4.2D—Deflection Due to Dead Loads

The maximum downward deflection at mid-span due to the beam weight and internal diaphragms shall be taken as:

$$\Delta_{D1} = \frac{5(M_{D1})L^2}{48E_{ci}I} \qquad (205.7.3.6.4.2D\text{-}1)$$

where:

M_{D1} = unfactored moment at mid-span due to the beam weight and any internal diaphragms (kip-in.)

The maximum downward deflection at mid-span due to slab, formwork, external diaphragms, and any other dead load that is applied to the beam before the slab has hardened shall be taken as:

$$\Delta_{D2} = \frac{5(M_{D2})L^2}{48E_cI} \qquad (205.7.3.6.4.2D\text{-}2)$$

COMMENTARY

SPECIFICATIONS

where:

M_{D2} = unfactored moment at mid-span due to dead load applied to the beam before the slab has hardened, except the beam weight and internal diaphragms (kip-in.)

E_c = modulus of elasticity of beam concrete (ksi)

For simple span construction, the maximum downward deflection at mid-span due to superimposed dead load shall be taken as:

$$\Delta_{D3} = \frac{5(M_{D3})L^2}{48E_cI_c} \qquad (205.7.3.6.4.2D\text{-}3)$$

where:

M_{D3} = unfactored moment at mid-span due to superimposed dead load (kip-in.)

I_c = moment of inertia of composite beam (in^4)

For continuous span construction, the maximum downward deflection at mid-span due to superimposed dead load shall be determined from continuous span analysis.

205.7.3.6.4.3D—Total Camber at Transfer of Prestressing

The total camber at transfer shall be taken as:

$$\Delta_t = \Delta_{prestressed} - \Delta_{D1}$$

Δf_s shall be assumed to be zero in determining $\Delta_{prestressed}$.

205.7.3.6.4.4D—Camber for Bearing Slope

The total camber for determining the bearing slope shall be taken as:

$$\Delta_b = \Delta_{prestressed} - \Delta_{D1}$$

Δf_s shall be assumed to be 10 percent in determining $\Delta_{prestressed}$.

205.7.3.6.4.5D—Total Camber in Beams at Time of Construction

The total camber in the beams at time of construction shall be taken as:

COMMENTARY

C205.7.3.6.4.5D

After release, prestressed beams may be stored for a period of days to as much as several months or more. During this time period, the camber increases due

SPECIFICATIONS

$$\Delta_c = \left(\Delta_{prestressed} - \Delta_{D1}\right) C_r$$

where:
C_r = 1.6
Δf_s = 10% in determining $\Delta_{prestressed}$

205.7.3.6.4.6D—Final Camber

Negative final camber (sag) shall be limited to L/2000.

205.10—DETAILS OF REINFORCEMENT

205.10.6—Transverse Reinforcement for Compression Members

205.10.6.2—Spirals

The following shall replace the third bullet of the fifth paragraph in A5.10.6.2.

- The use of welded splices for reinforcement bars is prohibited.

205.12—DURABILITY

205.12.3—Concrete Cover

The following shall replace A5.12.3:

Cover for unprotected prestressing and reinforcing steel shall not be less than that specified in Table 205.12.3-1 and modified for W/C ratio unless otherwise specified either herein or in Article 5.12.4.

Concrete cover and placing tolerances shall be shown in the contract documents.

COMMENTARY

to creep. The initial prestressing force, on the other hand, decreases due to shrinkage, creep of the concrete, and relaxation of the steel, all of which are time-dependent and have opposing effects. These time-dependent effects can be determined by using an estimated creep factor and prestressing loss.

Assuming the beams are stored from 7 to 80 days, it may be reasonable to estimate that the creep factor, C_r, varies in a range of 2.0 to 1.5 for 8-ksi and 10-ksi concrete respectively. The prestress loss, Δf_s, varies in a range of 5 to 15 percent in that time. For design, unless better information is available, C_r = 1.6 and Δf_s = 10 percent may be used. These are average values from Delaware prestressers. The assumed values for C_r and Δf_s shall be shown on the design drawings.

SPECIFICATIONS

The cover for pretensioned prestressing strand, anchorage hardware, and mechanical connections for reinforcing bars or post-tensioned prestressing strands shall be the same as for reinforcing steel unless otherwise specified herein.

The cover for metal ducts for post-tensioned tendons shall not be less than:

- That specified for main reinforcing steel,
- One-half the diameter of the duct, or
- That specified in Table 5.12.3-1.

For decks exposed to tire studs or chain wear, additional cover shall be used to compensate for the expected loss in depth due to abrasion, as specified in Article 2.5.2.4.

Modification factors for the W/C ratio shall be the following:

- For W/C ≤ 0.40..... 0.8
- For W/C ≥ 0.50……. 1.2

Minimum cover to main bars, including bars protected by epoxy coating, shall be 1.0 inch.

Cover to ties and stirrups may be 0.5 inch less than the values specified in Table 5.12.3-1 for main bars but shall not be less than 1.0 inch.

COMMENTARY

SPECIFICATIONS

Table 205.12.3-1 – Cover for Main Reinforcing Steel

Situation	Cover (inches)
Direct exposure to salt water	4.0
Cast against earth	3.0
Coastal	3.0
Exposure to deicing salts	2.5
Deck surfaces including 0.5-inch integral wearing surface	2.5
Exterior other than above	2.0
Interior other than above	
- Up to No. 11 bar	2.0
- No. 14 and No. 18 bars	2.0
Bottom of cast-in-place slabs	
- With SIP forms used	1.0
- Without SIP forms used	2.0
Precast soffit form panels	0.8
Precast reinforced piles	
- Noncorrosive environments	2.0
- Corrosive environments	3.0
Precast prestressed piles	3.0
Cast-in-place piles	
- Noncorrosive environments	2.0
- Corrosive environments	
- General	
- Protected	3.0
- Shells	3.0
- Auger-cast, tremie concrete,	2.0
or slurry construction	3.0
Precast concrete box culverts	
- Top slabs used as driving surface	2.5
- Top slabs with less than 2 feet of fill not used as a driving surface	2.0
- All other members	1.0

205.12.4—Protective Coatings

The following shall replace A5.12.4:

Protection against chloride-induced corrosion shall be provided by epoxy coating of the reinforcing steel.

205.13—SPECIFIC MEMBERS

205.13.2—Diaphragms, Deep Beams, Brackets, Corbels, and Beam Ledges

205.13.2.2—Diaphragms

The following shall supplement A5.13.2.2:

The minimum number of diaphragms is three per span: one at each support and one at mid-span.

COMMENTARY

SECTION 206 STEEL STRUCTURES

TABLE OF CONTENTS

INTENTIONALLY LEFT BLANK

SECTION 206 STEEL STRUCTURES

SPECIFICATIONS

COMMENTARY

206.6—FATIGUE AND FRACTURE CONSIDERATIONS

206.6.2—Fracture

The following shall replace paragraph 3 of A6.6.2:

The appropriate temperature zone designation for Delaware is Zone 2 for use with Table A6.6.2-1. The temperature zone shall be designated in the contract documents.

206.10—I-SECTION FLEXURAL MEMBERS

206.10.11—Stiffeners

206.10.11.1—Transverse Stiffeners

206.10.11.1.1—General

The following shall supplement A6.10.11.1.1.

Transverse stiffeners shall be welded to the girder web using a minimum 5/16-inch continuous fillet weld.

206.10.11.2—Bearing Stiffeners

206.10.11.2.1—General

The following shall replace the bearing stiffener connection requirements of A6.10.11.2.1 paragraph 4.

Each bearing stiffener shall either be milled to bear against the flange through which it receives its load and connected to both flanges using an appropriately sized fillet weld or attached to the flanges by a full penetration groove weld.

206.13—CONNECTIONS AND SPLICES

206.13.6—Splices

206.13.6.2—Welded Splices

The following shall replace A6.13.6.2:

Welded field splices are not permitted.

INTENTIONALLY LEFT BLANK

SECTION 210 FOUNDATIONS

TABLE OF CONTENTS

This page intentionally left blank.

SECTION 210 FOUNDATIONS

SPECIFICATIONS

COMMENTARY

210.2—DEFINITIONS

The following shall supplement A10.2:

FHWA DCDPF – NHI 05-042 Design and Construction of Driven Pile Foundations

FHWA DCMSE – FHWA NHI-10-025/ FHWA GEC 011 – Vol II, Design and Construction of Mechanically Stabilized Earth Walls and Reinforced Soil Slopes – Volume II

FHWA NGCAW – FHWA NHI-07-071 Earth Retaining Structures

FHWA RBOC – FHWA-HI-92-001 Rock Blasting and Overbreak Control

FHWA SF – FHWA-NHI-06-088 Soils and Foundations

FHWA TMDCRT – FHWA NHI-09-010 Technical Manual for Design and Construction of Road Tunnels – Civil Elements

210.4—SOIL AND ROCK PROPERTIES

210.4.2—Subsurface Exploration

The following shall supplement A10.4.2:

Conduct subsurface investigation in accordance with Section 105 – Geotechnical Investigations.

The number of borings per substructure and boring depths shall be determined in accordance with Section 105 – Geotechnical Investigations.

210.4.3—Laboratory Test

The following shall supplement A10.4.3:

Prepare laboratory test programs in accordance with Section 105 – Geotechnical Investigations.

210.4.6—Selection of Design Properties

210.4.6.3—Soil Deformation

The following shall supplement A10.4.6.3:

Consolidation settlement shall be considered for

SPECIFICATIONS

very soft to medium-stiff fine-grained soils, such as clays and silts. Elastic settlement should be considered for granular soils and stiff fine-grained soils.

210.4.7D—Running Sands

The term "running sands" typically refers to loosely packed granular deposits that become fluidized by water passing through them. They flow due to lack of confinement and excess pore water pressure. Although these materials are also prone to soil liquefaction, the term running sands is commonly applied for fluidization during soil excavation, and it is not related to application of seismic forces. As a result of soil excavation, a hydraulic gradient is induced, resulting in water flowing towards the bottom of the excavation. Running sands are typically observed as fluidized soils coming out of the bottom of the excavation (sand boils).

The following are typical indications of the potential for running sands. These criteria are based on previous experience by the Department and accepted practices (FHWA TMDCRT). Only soils satisfying all of the criteria listed below should be considered as potential running sands:

- Soils classified as AASHTO A-1-b with less than 10 percent of fines (material passing the No. 200 sieve).
- Soils with very loose to medium-dense relative density.
- Soils that are in-situ saturated or will be saturated as a result of construction activities (excavation below the water table or below a stream, pond, or another body of water).

The potential for a soil to become running sand should be assessed depending on the encountered subsurface conditions and the planned construction activities, such as the depth of excavation and changes on the groundwater table (anticipated hydraulic gradient).

Previous experience, flow nets, or other analytical techniques can also be used to estimate this potential. Depending on the expected potential of soil to become running sand, the following steps should be considered during construction:

- For soil with a low potential, create a firm base at the excavation by adding stone material. Undercut or overexcavate poor

COMMENTARY

C210.4.7D

If soils are identified as potential running sands based on the criteria provided in this section (soil classification, content of fines, relative density, saturation), the level of potential for fluidization could be assessed based on the following criteria:

Low potential:
- Top of the stratum located below the bottom of the excavation.
- Groundwater table expected to be at or slightly below the bottom of the excavation.

Moderate potential:
- Top of the stratum located at or above the bottom of the excavation.
- Groundwater table expected to be slightly above the bottom of the excavation.
- Expected hydraulic gradient of approximately 0.3 or less (see FHWA NGCAW and A11.6.3.4).

High potential:
- Top of the stratum located at or above the bottom of the excavation.
- Groundwater table expected to be significantly above the bottom of the excavation.
- Expected hydraulic gradient of approximately 0.3 or greater. Note that for a loose soil, a hydraulic gradient of approximately 0.4 to 0.5 will not satisfy a factor of safety of 1.5 when compared to the critical hydraulic gradient (ic = effective unit weight / water unit weight), and therefore a significant embedment depth of sheeting/shoring will be required. The water table may need to be lowered in the vicinity of the excavation to reduce the hydraulic gradient.

SPECIFICATIONS **COMMENTARY**

materials as necessary.

- For soil with a moderate potential, increase resistance to water flow by increasing the embedment depth of sheeting/shoring. See FHWA NGCAW for recommended embedment values.
- For soil with a high potential, add well points, sumps, or deep wells to lower the water table in the vicinity of the excavation. This can be done in addition to increasing the shoring embedment depth, depending on the conditions.

For moderate and high potential sites, underground utilities, relocations, and similar obstructions may preclude the use of sheeting/shoring. Underground relocations should be avoided at these work areas, if possible, or directed around the work area instead of under it.

The potential for running sands and corrective measures should be identified during the design phase. The proposed corrective measures should also be included as bid items. Not identifying the potential for running sands could result in unnecessary additional costs and time delays.

210.5—Limit States and Resistance Factors

210.5.1—General

The following shall supplement A10.5.1:

The eccentricity of loading for spread footings shall be within the limits defined in Section 210.6.3.3. The eccentricity of loading for deep foundations (driven piles, drilled shafts, micropiles) is controlled by only allowing uplift on extreme event limit states. No uplift is permitted for deep foundation elements under service and strength limit states for regular bridge structures.

210.5.2—Service Limit States

210.5.2.2—Tolerable Movements and Movement Criteria

The following shall supplement A10.5.2.2:

Vibration Monitoring and Control

Instrument and monitor vibrations resulting from construction activities such as pile installation, shoring

SPECIFICATIONS

installation, excavation demolition, and rock blasting if the activities take place in close proximity to existing bridge substructures or urban environments (buildings and utilities).

Prior to construction, the Department will review the contractor's Vibration Monitoring and Control Plan which, for approval, must include at a minimum the following:

- Preconstruction report documenting the existing conditions of any structure within a radius of approximately 300 feet or as specified by the Department. Inspect and document through photographs, video, sketches, and/or any other applicable means. Document size and extent of any existing cracks or structural deficiencies.
- Instrumentation program documenting equipment to be used for obtaining vibration measurements (e.g., seismographs) and locations to be monitored. Include anticipated frequency of data collection.
- Description of procedures to be employed to prevent damage if the expected vibration is higher than the values described herein.

Use the following maximum permissible levels for Peak Particle Velocity (PPV):

- 0.5 inch/second for normal residential structures, existing bridge substructures, existing pipes and culverts, and any other utilities.
- 0.2 inch/second for structures already presenting structural deficiencies before construction activities, structures that are extremely sensitive to vibration, or structures on soils susceptible to densification by vibration (i.e., loose fill and running sands).
- 2.0 inches/second for noncritical structures or structures designed to accommodate vibrations.

See FHWA DCDPF for more information regarding vibration monitoring and control for driven piles, and see FHWA RBOC for more information regarding vibrations during blasting operations. Note these references provide general guidance for estimation of PPV depending on geotechnical conditions and the

COMMENTARY

SPECIFICATIONS

vibration source.

210.5.5—Resistance Factors

210.5.5.2—Strength Limit States

210.5.5.2.3—Driven Piles

The following shall supplement A10.5.5.2.3:

A minimum of two dynamic tests on production piles shall be provided per substructure. Additional dynamic tests should be considered if site conditions significantly vary on the substructure.

210.6—SPREAD FOOTINGS

210.6.1—General Considerations

210.6.1.2—Bearing Depth

The following shall replace A10.6.1.2:

The bottom of spread footings shall be below frost depth as specified in Section 107 – Final Design Considerations – Substructure. Also, the bottom shall satisfy scour requirements on stream environments per Section 107 – Final Design Considerations – Substructure.

210.6.3—Strength Limit State Design

210.6.3.3—Eccentric Load Limitations

The following shall replace A10.6.3.3:

The eccentricity of loading at the strength limit state, evaluated based on factored loads, shall not exceed:

- One-fourth of the corresponding footing dimension, *B* or *L*, for footings on soil (resultant force within the middle one-half of the corresponding footing dimension).
- One-third of the corresponding footing dimension, *B* or *L*, for footings on rock (resultant force within the middle two-thirds of the corresponding footing dimension).

210.6.3.4—Failure by Sliding

The following shall supplement A10.6.3.4:

Passive pressure resistance in front of regular

COMMENTARY

C210.5.5.2.3

For substructures with only one row of piles, this requirement can be waived and only one dynamic test on production piles shall be required. This is intended for smaller projects such as integral abutments where substructures have a single row of piles, typically with five to eight production piles.

C210.6.3.4

The following shall supplement AC10.6.3.4:

Passive pressure developing in front of regular

SPECIFICATIONS

spread footings shall be neglected for sliding considerations.

COMMENTARY

footings is typically neglected because of scour, erosion, or excavation trenches during the design life of the structure.

210.7—DRIVEN PILES

210.7.1—General

210.7.1.4—Batter Piles

The following shall supplement A10.7.1.4:

Batter piles shall have a 1H:4V or 1H:3V batter.

210.7.1.6—Determination of Pile Loads

210.7.1.6.2 —Downdrag

The following shall supplement A10.7.1.6.2

Downdrag and transient loads such as live loads should not be considered as acting simultaneously on any load combination. For the different load cases, use only the higher of these two factored loads (factored downdrag versus factored transient loads).

C210.7.1.6.2

Downdrag loads are associated with settlement of compressive soils around piles. Soils surrounding the piles experience settlement typically because of additional fill material placed adjacent to the pile foundation (e.g., approach embankments on bridge abutments). Settlement is due to dead loads that have been present for a continuous period of time, such as fill surcharge; it is not due to temporary transient loads. Therefore, transient loads should not be considered at the same time as downdrag loads.

As presented in AC3.11.8, transient loads can actually act to reduce the downdrag loads because they cause a downward movement of the pile, resulting in a temporary reduction or elimination of the downdrag force.

Possible measures to avoid downdrag include preloading of in-situ soils to induce settlement prior to pile installation (with or without wick drains to accelerate consolidation), applying bitumen or another viscous coating to the pile surfaces before installation, and installing piles through casing that isolates them from surrounding settling soil.

210.7.2—Service Limit State Design

210.7.2.4—Horizontal Pile Foundation Movement

The following shall supplement A10.7.2.4:

The values presented in Table A10.7.2.4-1 for pile *P*-multipliers shall only apply for substructures where the expected single-pile deflections are above 1 inch, or where the pile spacing in the direction parallel to the applied load is less than three times the pile

C210.7.2.4

The multipliers presented in Table A10.7.2.4.1 were developed from FHWA DCDPF. The studies summarized in this document present deflections greater than 1 inch and are expected to represent significant stress overlaps between adjacent piles with displacements close to passive soil failure.

SPECIFICATIONS

COMMENTARY

diameter.

For substructures where the individual pile deflections are below 1 inch and the spacing of piles in the direction parallel to the load is greater than three times the pile diameter, these multipliers can be omitted (*P*-multiplier = 1.0).

210.7.2.6—Lateral Squeeze

The following shall supplement A10.7.2.6:

In addition to the reference presented by A10.7.2.6, refer to FHWA SF and FHWA DCMSE for identification of threshold conditions that could potentially result in lateral squeeze, for detailed evaluation of the safety factor against lateral squeeze, and for a means to estimate the horizontal movement due to lateral squeeze. Per FHWA DCMSE, consider a minimum acceptable factor of safety of 1.3 against lateral squeeze. Caution is advised and rigorous analyses (i.e., numerical modeling) shall be performed when the factor of safety against lateral squeeze is less than 2.0.

Lateral squeeze is not limited to pile foundations and fill embankments on top of soft soils. In general, it is a potential problem for soft foundation soil subjected to an unbalanced load at its surface.

Potential solutions to prevent lateral squeeze include but are not limited to:

- Delayed installation of piles until settlement has stabilized. Consider staged construction and/or preloading.
- Excavation and replacement of soft soils.
- Provision of expansion shoes large enough to accommodate movement.
- Consider lightweight fill to reduce driving forces.
- Consider ground improvement techniques (e.g.,, accelerated drainage, reinforced soil, dynamic compaction).

210.7.3—Strength Limit State Design

210.7.3.4—Nominal Axial Resistance Change after Pile Driving

The following shall supplement A10.7.3.4:

SPECIFICATIONS

If soil relaxation or setup is expected to occur during or shortly after pile driving, specify the minimum time for pile restrike of test piles, and if necessary, of production piles.

210.7.3.13—Pile Structural Resistance

210.7.3.13.4—Buckling and Lateral Stability

The following shall supplement A10.7.3.13.4:

Equations presented in AC10.7.3.13.4 should be used only for preliminary design. Depth to fixity for final design should be determined using a p-y curve computation.

210.7.5—Corrosion and Deterioration

The following shall supplement A10.7.5:

See Section 107.3.5.4.1 – Concrete Footings, Piles, and Shafts for measures that shall be taken on all concrete elements used in corrosive environments.

See Section 107.3.5.4.2 – Steel Piles and Casings for measures that shall be taken on all steel piles and casings used in corrosive environments.

See Section 107.3.5.4.3 – Timber Piles for measures that shall be taken on all timber piles used in corrosive environments.

210.7.9—Probe Piles

The following shall supplement A10.7.9:

A minimum of two test piles with dynamic testing should be performed per substructure bearing on piles (i.e., PDA and CAPWAP testing).

COMMENTARY

C210.7.9

For substructures with only one row of piles, only one test pile with dynamic testing is required. See Section C210.5.5.2.3.

SECTION 211 ABUTMENTS, PIERS, AND WALLS

TABLE OF CONTENTS

INTENTIONALLY LEFT BLANK

SECTION 211 ABUTMENTS, PIERS, AND WALLS

SPECIFICATIONS

211.6—ABUTMENTS AND CONVENTIONAL RETAINING WALLS

211.6.3—Bearing Resistance and Stability at the Strength Limit State

211.6.3.3—Eccentricity Limits

The following shall replace A11.6.3.3.

For foundations on soil, the location of the resultant of the reaction forces shall be within the middle one-half of the base width (maximum eccentricity of one-fourth times the base width).

For foundation on rock, the location of the resultant of the reaction forces shall be within the middle two-thirds of the base width (maximum eccentricity of one-third times the base width).

COMMENTARY

C211.6.3.3

The second sentence of AC11.6.3.3 shall be deleted.

INTENTIONALLY LEFT BLANK

SECTION 213 RAILINGS

TABLE OF CONTENTS

INTENTIONALLY LEFT BLANK

SECTION 213 RAILINGS

SPECIFICATIONS

COMMENTARY

213.7—TRAFFIC RAILING

213.7.3—Railing Design

213.7.3.2—Height of Traffic Parapet or Railing

The following shall replace A13.7.3.2:

Traffic railings shall be at least 31.0 inches in height for TL-3, 32.0 inches for TL-4, 42.0 inches for TL-5, and 90.0 inches for TL-6.

The bottom 3.0-inch lip of the safety shape shall not be increased for future overlay considerations.

The minimum height for a concrete parapet with a vertical face shall be 31.0 inches. The height of other combined concrete and metal rails shall not be less than 31.0 inches and shall be determined to be satisfactory through crash testing for the desired test level.

Bicycle railings shall be at least 42.0 inches in height. The minimum height of the pedestrian or bicycle railing should be measure above the surface of the sidewalk of the bikeway.

The minimum geometric requirements for combination railings beyond those required to meet crash test requirements shall be taken as specified in Articles 13.8, 13.9, and 13.10.

C213.7.3.2

The following shall supplement AC13.7.3.2.

The minimum suggested guardrail height for TL-3 is increased to 31.0 inches based upon the recommendations of FHWA Memo *ACTION: Roadside Design: Steel Strong Post W-beam Guardrail, May 17, 2010*. The minimum railing height for TL-3 is increased to provide consistency between the bridge barrier and approach guardrail heights and to avoid the need for a transition.

On bridges where bicycle speeds are likely to be high (such as on a downgrade) and where a bicycle could potentially impact the railing at an angle of 25 degrees or greater (such as on a curve), a 48.0-inch high railing may be considered.

INTENTIONALLY LEFT BLANK

SECTION 214 JOINTS AND BEARINGS

TABLE OF CONTENTS

INTENTIONALLY LEFT BLANK

SECTION 214 JOINTS AND BEARINGS

SPECIFICATIONS

COMMENTARY

214.7—SPECIAL DESIGN PROVISIONS FOR BEARINGS

214.7.5—Steel-Reinforced Elastomeric Bearings – Method B

214.7.5.1—General

The following shall replace the first paragraph of A14.7.5.1:

Steel-reinforced elastomeric bearings shall be designed using the provisions of this Article, and the component shall be taken to meet the requirements of Method B.

INTENTIONALLY LEFT BLANK

SUBJECT	DETAIL NO.	TITLE	ISSUE DATE
GENERAL	301.01	BRIDGE PROJECT NOTES	10/01/2016
	301.02	REINFORCEMENT BAR FABRICATION DETAILS	10/01/2015
	301.03	CONCRETE REPAIR DETAILS	10/01/2016
	301.04	EXCAVATION AND BACKFILL PAY LIMIT DETAILS	10/01/2016
SUBSTRUCTURE	305.01	PRESTRESSED-PRECAST CONCRETE PILE DETAILS	10/01/2015
	305.02	CAST-IN-PLACE PILE DETAILS	10/01/2015
	305.03	STEEL H-PILE DETAILS	10/01/2015
	305.04	DRILLED SHAFT DETAILS	10/01/2016
	310.01	REINFORCED CONCRETE CANTILEVER ABUTMENT DETAILS	N/A
	310.02	STUB ABUTMENT DETAILS	N/A
	310.03	SEMI-INTEGRAL ABUTMENT DETAILS	N/A
	310.04	INTEGRAL ABUTMENT DETAILS	N/A
	310.05	WINGWALL DETAILS	N/A
	315.01	REINFORCED CONCRETE PIER DETAILS	10/01/2016
	320.01	SLOPE PROTECTION DETAILS	N/A
SUPERSTRUCTURE	325.01	CONCRETE DECK DETAILS	10/01/2016
	325.02	BRIDGE RAILING DETAILS	10/01/2016
	325.03	APPROACH SLAB DETAILS	10/01/2016
	325.04	MOMENT SLAB DETAILS	10/01/2015
	325.05	SLEEPER SLAB DETAILS	10/01/2015
	330.01	PRESTRESSED CONCRETE BEAM FRAMING PLAN AND CAMBER DETAILS	10/01/2015
	330.02	PRESTRESSED CONCRETE BOX BEAM BRIDGE DETAILS	10/01/2016
	330.03	PRESTRESSED CONCRETE NEXT BEAM BRIDGE DETAILS	10/01/2016
	330.04	PRESTRESSED CONCRETE PCEF BEAM BRIDGE DETAILS	10/01/2016
	335.01	STEEL BEAM BRIDGE DETAILS	10/01/2016
	335.02	STEEL BEAM FRAMING PLAN DETAILS	10/01/2015
	335.03	STEEL BEAM CAMBER DETAILS	10/01/2015
	340.01	STRIP SEAL EXPANSION JOINT DETAILS	10/01/2016
	340.02	FINGER JOINT EXPANSION JOINT DETAILS	N/A
	340.03	COMPRESSION SEAL DETAILS	N/A
	345.01	ELASTOMERIC BEARING DETAILS	10/01/2015
	345.02	POT BEARING DETAILS	10/01/2016

SUBJECT	DETAIL NO.	TITLE	ISSUE DATE
CULVERTS	350.01	PIPE CULVERT DETAILS	10/01/2016
	355.01	PRECAST CONCRETE BOX CULVERT DETAILS	10/01/2016
	360.01	PRECAST CONCRETE RIGID FRAME DETAILS	10/01/2016
MISCELLANEOUS	365.01	SIGN STRUCTURES	N/A
	370.01	SOUND BARRIERS	N/A
	375.01	BRIDGE LIGHTING DETAILS	N/A

DISCLAIMER:
ALL TYPICAL BRIDGE DESIGN DETAILS SHOWN IN SECTION 300 OF THE BRIDGE DESIGN MANUAL ARE NOT INTENDED TO ACT AS STANDARD CONSTRUCTION DETAILS, AND THEREFORE MUST BE SHOWN ON BRIDGE PLANS IN THE CONTRACT DOCUMENTS. IN ADDITION, BRIDGE PLANS SHOULD NOT REFER TO SECTION 300 OF THE BRIDGE DESIGN MANUAL.

NOTE:
THE DETAILS ON THIS SHEET HAVING 'N/A' UNDER ITS DATE ARE NOT YET AVAILABLE AND WILL BE INCLUDED IN FUTURE BRIDGE DESIGN MANUAL REVISIONS.

SECTION 200

1. REMOVAL OF UNSUITABLE MATERIAL:
SOIL BORINGS HAVE IDENTIFIED MATERIAL, DESCRIBED AS (Insert description), THAT (IS or MAY BE) UNSUITABLE FOR BEARING OF THE STRUCTURE AT ELEVATION (x) TO (x). THIS LAYER (SHALL or MAY) BE EXCAVATED AS NECESSARY (TO A MAXIMUM DEPTH OF (x') BELOW THE BOTTOM OF FOOTING ELEVATION) UNTIL SUITABLE BEARING MATERIAL IS REACHED, AS DIRECTED BY THE ENGINEER. EXCAVATION TO ELEVATION (x) IS INCLUDED IN THE QUANTITY FOR STRUCTURAL EXCAVATION. EXCAVATION BELOW THE FOOTING ELEVATION SHALL BE BACKFILLED WITH (specify borrow type, stone and/or crushed concrete or a combination) ON GEOTEXTILE. PAYMENT UNDER (respective items).

2. ROCK PROFILE VARIATION:
IT IS ANTICIPATED THAT THE ACTUAL PROFILE OF THE ROCK VARIES FROM WHAT HAS BEEN MEASURED, THE ESTIMATED QUANTITIES FOR THE ITEMS LISTED BELOW HAVE BEEN INCREASED XX% OVER THE QUANTITIES CALCULATED:
- (Insert item numbers and descriptions)

3. BLAST MONITORING:
BOTH THE EXISTING STRUCTURE AND THE PROPOSED STRUCTURE SHALL BE MONITORED DURING ANY BLASTING TO ENSURE STRUCTURAL STABILITY THROUGHOUT THE DURATION OF THE PROJECT. THE MAXIMUM PERMISSIBLE LEVEL FOR PEAK PARTICLE VELOCITY (PPV) SHALL BE (Insert appropriate value) IN/SEC. PAYMENT SHALL BE UNDER ITEM #(207010 or 207011) - ROCK EXCAVATION FOR STRUCTURES.

4. REMOVAL OF STRUCTURES AND OBSTRUCTIONS:
ITEMS TO BE REMOVED UNDER ITEM #211000 - REMOVAL OF STRUCTURES AND OBSTRUCTIONS ASSOCIATING WITH BRIDGE (Insert bridge number) SHALL INCLUDE, BUT NOT BE LIMITED TO, THE FOLLOWING:
- (Insert list of items to be removed under #211000)

5. HAZARDOUS MATERIAL (timber only):
THE CONTRACTOR IS ADVISED THAT THE (existing or previous) STRUCTURE OVER (Insert road or stream name) MAY CONTAIN CREOSOTED TIMBER. ALL HAZARDOUS MATERIALS (i.e. creosote timber) SHALL BE HANDLED AS PER SPECIAL PROVISIONS 202560. ALL COSTS INVOLVED WITH THIS WORK SHALL BE INCIDENTAL TO ITEM #211000 - REMOVAL OF STRUCTURES AND OBSTRUCTIONS.

6. HAZARDOUS MATERIAL (steel only):
THE CONTRACTOR IS ADVISED THAT THE EXISTING STRUCTURE OVER (Insert road or stream name) DOES CONTAIN LEAD BASED PAINT. AS A RESULT, THE CONTRACTOR'S PROPOSED DEMOLITION PLAN MUST ADDRESS, AS A MINIMUM, METHODS OF CUTTING THE BEAMS AND/OR DIAPHRAGMS, IF REQUIRED, AND HOW THOSE PERSONS PERFORMING SUCH WORK WILL BE PROTECTED IN ACCORDANCE WITH APPLICABLE OSHA REGULATIONS. ADDITIONALLY, THE CONTRACTOR MUST ADDRESS WHEN AND HOW THE LEAD BASED PAINT WILL BE REMOVED FROM THE STRUCTURAL STEEL AND ALL RELATED BRIDGE COMPONENTS. IF THE WORK IS PERFORMED ON SITE, THEN PROPER PROTECTION, CONTAINMENT, AND FINAL LEAD PAINT DISPOSAL MUST BE ADDRESSED IN THE PROPOSED PLAN. IF THE BEAMS WILL BE TRANSPORTED WITH THE PAINT STILL INTACT, THEN THE PLAN SHALL DETAIL HOW THE STRUCTURAL COMPONENTS WILL BE PROTECTED DURING TRANSPORT, WHERE AND HOW THE PAINT WILL BE REMOVED, AND THE LOCATION OF FINAL PAINT DISPOSAL, AGAIN IN ACCORDANCE WITH OSHA REGULATIONS. WRITTEN DOCUMENTATION MUST BE PROVIDED TO THE ENGINEER, PRIOR TO FINAL CONTRACT ACCEPTANCE, NOTING WHEN AND WHERE THE LEAD BASED PAINT WAS REMOVED, AND THE LOCATION OF FINAL PAINT DISPOSAL. ALL COSTS INVOLVED WITH THE ABOVE LISTED WORK SHALL BE INCIDENTAL TO ITEM #211000 - REMOVAL OF STRUCTURES AND OBSTRUCTIONS.

7. SIGNING:
TO AVOID DAMAGE, SIGNS WITHIN PROJECT LIMITS MAY BE REMOVED DURING CONSTRUCTION IF NEEDED, BUT MUST BE REPLACED TO MATCH EXISTING CONDITIONS BEFORE REOPENING THE ROADWAY. ALL WORK RELATED TO MOVING AND REINSTALLING THE SIGN SHALL BE INCIDENTAL TO ITEM #211000 - REMOVAL OF STRUCTURES AND OBSTRUCTIONS. IF THE SIGN IS DAMAGED DURING CONSTRUCTION, THE SIGN MUST BE REPLACED AT THE CONTRACTOR'S EXPENSE.

SECTION 600

8. PORTLAND CEMENT CONCRETE:
USE PORTLAND CEMENT CONCRETE FOR CAST-IN-PLACE ELEMENTS AS FOLLOWS:
(f'c = 28-DAY COMPRESSIVE STRENGTH)
CLASS A - (Insert list of structural components utilizing Class A concrete), (f'c = 4.5 ksi)
CLASS B - (Insert list of structural components utilizing Class B concrete), (f'c = 3.0 ksi)
CLASS C - (Insert list of structural components utilizing Class C concrete), (f'c = 2.0 ksi)
CLASS D - (Insert list of structural components utilizing Class D concrete), (f'c = 4.5 ksi)
A HIGHER CLASS CONCRETE MAY BE SUBSTITUTED FOR A LOWER CLASS CONCRETE AT NO ADDITIONAL COST TO DELDOT WITH APPROVAL OF THE BRIDGE DESIGN ENGINEER.

USE PORTLAND CEMENT CONCRETE FOR PRECAST ELEMENTS AS FOLLOWS:
(f'c = 28-DAY COMPRESSIVE STRENGTH)
(f'ci = COMPRESSIVE STRENGTH AT INITIAL PRESTRESS)
PRESTRESSED (Insert list of structural components):
f'c = (Insert f'c value) ksi; f'ci = (Insert f'ci value) ksi
-DESIGN ASSUMPTIONS: THE PRESTRESSED CONCRETE BEAMS WERE DESIGNED FOR (NORMAL EXPOSURE or SEVERE CORROSIVE CONDITIONS).
-CHAMFER ALL EXPOSED EDGES ¾" X ¾" UNLESS OTHERWISE NOTED.
-DO NOT SLIP-FORM BARRIERS, UNLESS OTHERWISE APPROVED BY THE DEPARTMENT.

SECTION 600 (CONTINUED)

9. DECK SLAB:
THE DECK SLAB THICKNESS INCLUDES ½" INTEGRAL WEARING SURFACE.

10. BAR REINFORCEMENT:
-REINFORCING STEEL SHALL CONFORM TO AASHTO M31 (ASTM A615), GRADE 60.
-REINFORCING STEEL SHALL HAVE A 3" CLEAR COVER IF CAST AGAINST EARTH OR A 2" CLEAR COVER ELSEWHERE, UNLESS OTHERWISE SPECIFIED ON THE PLANS.
-ALL REINFORCING STEEL SHALL BE PROTECTED WITH FUSION BONDED EPOXY. EPOXY COATED REINFORCING STEEL SHALL CONFORM TO AASHTO M284 (D3963).
-ANY FIELD CUTTING OR FIELD BENDING MUST BE APPROVED BY THE ENGINEER. PAYMENT SHALL BE INCIDENTAL TO THE BAR REINFORCEMENT ITEM.
-GALVANIZED REINFORCING STEEL MAY BE SUBSTITUTED FOR EPOXY-COATED REINFORCING STEEL AT NO ADDITIONAL COST TO DELDOT WITH APPROVAL OF THE BRIDGE DESIGN ENGINEER.
-WELDING OF REINFORCEMENT DURING FABRICATION OR CONSTRUCTION IS NOT PERMITTED UNLESS SPECIFIED.

11. PRECAST BEAMS AND PIER DIAPHRAGMS (typical for multi-span precast prestressed concrete beams):
TIME FROM CASTING OF BEAMS TO POURING OF PIER DIAPHRAGMS MUST BE MORE THAN 90 DAYS. IF THIS TIME FRAME IS NOT SUFFICIENT, THE CONTRACTOR MUST SUBMIT FOR APPROVAL THE DESIGN SHOWING STRUCTURAL CALCULATIONS TO ACCOUNT FOR RESTRAINT MOMENTS.

12. INTERMEDIATE DIAPHRAGMS (typical for precast prestressed concrete beams):
THE PRECASTER AND/OR THE CONTRACTOR MAY USE A PRECAST CONCRETE OR GALVANIZED STEEL ALTERNATE FOR THE INTERMEDIATE DIAPHRAGMS. IF THIS OPTION IS CHOSEN, DETAILS, WHICH ALSO INCLUDE THE NEW CONNECTIONS, SHALL BE INCLUDED IN THE PRECAST PRESTRESSED BEAM WORKING DRAWINGS FOR APPROVAL.

13. END AND PIER DIAPHRAGMS (typical for precast prestressed concrete beams):
END DIAPHRAGMS AND PIER DIAPHRAGMS FOR (Insert pier numbers) CANNOT BE POURED UNTIL DECK POUR (Insert deck pour sequence number) IS COMPLETED.

14. CONCRETE SEALER:
REFER TO DIAGRAMS CONTAINING CONCRETE SEALER LIMITS ON SHEET(s) (Insert sheet number(s)). PAYMENT SHALL BE INCIDENTAL TO (Insert appropriate item number). (If necessary, Insert appropriate notes describing limits of protective coating if such details are difficult to outline on the plans.)

15. ABUTMENT PROTECTION:
THE ABUTMENT PROTECTION SHALL CONSIST OF (Insert relevant protection information). THE PROTECTION SHALL EXTEND (Insert dimension) FROM THE FACE OF EACH ABUTMENT or MSE WALL AND TERMINATE IN A 2'-0" DEEP TOE.

16. STRUCTURAL STEEL:
PROVIDE STRUCTURAL STEEL CONFORMING TO AASHTO M270, GRADE 50 or 50W (ASTM A709, GRADE 50 or 50W) DESIGNATION, EXCEPT WHEN NOTED OTHERWISE. THE ADDITIONAL REQUIREMENTS FOR CHARPY V-NOTCH TESTING (DENOTED AS 'CVN' ON PLANS) OF AASHTO M270 FOR PRIMARY LOAD CARRYING MEMBERS SHALL BE INCLUDED. SUPPLEMENTAL NOTCH TOUGHNESS REQUIREMENTS ARE MANDATORY FOR:
-TOP AND BOTTOM GIRDER FLANGES AS SHOWN ON PLANS
-GIRDER WEB PLATES AS SHOWN ON PLANS
-GIRDER FIELD SPLICE PLATES
-ALL DIAPHRAGM MEMBERS AND DIAPHRAGM CONNECTION PLATES

ALL FASTENERS ARE ⅞" DIAMETER ASTM A325 HIGH STRENGTH BOLTS, TYPE 1, UNLESS OTHERWISE NOTED. REAM SUBDRILLED or SUBPUNCHED HOLES FOR FIELD SPLICES IN THE FABRICATION SHOP.

(typical for multi-span structures) IF GIRDERS CAN BE FABRICATED IN LENGTHS LONGER THAN THE SECTIONS SHOWN ON THE PLANS BY ELIMINATING FIELD SPLICES, FIELD SPLICES MAY BE OMITTED AT THE REQUEST OF THE CONTRACTOR. THE CONTRACTOR ASSUMES FULL RESPONSIBILITY FOR SECURING A HAULING PERMIT. APPROVAL FOR ELIMINATION OF A FIELD SPLICE AT THE SHOP DRAWING STAGE DOES NOT OBLIGATE THE DEPARTMENT TO ISSUE A HAULING PERMIT.

(typical for multi-span structures) IF GIRDERS CANNOT BE SHIPPED IN THE LENGTHS SHOWN ON THE PLANS, THE CONTRACTOR MAY SUBMIT FOR APPROVAL A WORKING DRAWING OF ADDITIONAL FIELD SPLICE(S) WITH A PRIOR APPROVAL OF THE BRIDGE DESIGN ENGINEER. THE WORKING DRAWING MUST SHOW AT THE MINIMUM THE LOCATIONS OF THE FIELD SPLICES AND SPLICE DETAILS, AND MUST BE STAMPED BY A PROFESSIONAL ENGINEER REGISTERED BY THE STATE OF DELAWARE. NO COMPENSATION WILL BE ALLOWED FOR ANY ADDITION FIELD SPLICES.

PROVIDE MATERIALS AND PERFORM WORK IN ACCORDANCE WITH AASHTO/AWS D1.5M/D.15 **BRIDGE WELDING CODE, AND CONTRACT DOCUMENTS. MAKE TACK WELDS WITH THE SAME TYPE OF ELECTRODE AND INCORPORATE IN THE FINAL WELD. NO OTHER TACK WELDING WILL BE PERMITTED.

DO NOT MAKE WELDS BY MANUAL SHIELDED METAL ARC PROCESS FOR PRIMARY GIRDER WELDS SUCH AS FLANGE TO WEB WELDS OR FOR SHOP SPLICES OF WEB AND FLANGES.

DO NOT USE FORM SUPPORT SYSTEMS THAT WILL CAUSE UNACCEPTABLE OVERSTRESS OR DEFORMATION TO PERMANENT BRIDGE MEMBERS.

SECTION 600 (CONTINUED)

16. STRUCTURAL STEEL (CONTINUED):
(for standard form support systems only in accordance with requirements specified in figure 106-1) THE FASCIA GIRDERS ARE DESIGNED FOR A TEMPORARY CONSTRUCTION LOAD APPLIED TO THE WEB WITHIN 6" OF THE BOTTOM FLANGE AT APPROXIMATELY 4'-0" INTERVALS. THIS LOAD APPROXIMATES THE HORIZONTAL COMPONENT OF A DECK SLAB OVERHANG FORM SUPPORT BRACKET AND CONSISTS OF A (Insert value) klp/ft ALLOWANCE FOR THE WEIGHT OF THE CONCRETE, FORMS, AND DECK FINISHING MACHINE.

(typical for curved girders) GIRDER WEBS SHALL BE ERECTED IN THE (Insert appropriate condition) CONDITION AS DESCRIBED IN SECTION 106.8.9.1.3 OF THE DELDOT BRIDGE DESIGN MANUAL.

SHOP ASSEMBLE THE ENTIRE STEEL SUPERSTRUCTURE FOLLOWING THE SAME ERECTION PROCEDURES AND SUPPORT CONDITIONS TO ENSURE THE PROPER FIT FOR ALL STRUCTURAL STEEL COMPONENTS PRIOR TO REAMING OF BOLT HOLES FOR SPLICES AND DIAPHRAGM CONNECTION PLATES.

DO NOT WELD PERMANENT METAL DECK FORMS OR OTHER ATTACHMENTS TO GIRDER TOP FLANGES IN TENSION ZONES. TENSION ZONES OF TOP FLANGE ARE DESIGNATED ON THE PLANS. THREADED STUDS FOR THE SUPPORT OF THE DECK OVERHANG FORMING BRACKET ARE PERMITTED PROVIDE THE THREADED STUD IS ATTACHED WITH THE SAME WELDING PROCESSING AS THE SHEAR STUDS.

VERTICALLY ADJUST STAY-IN-PLACE FORMS TO ATTAIN FINISHED LINES AND GRADES REQUIRED ON THE PLANS.

USE OVERSIZED HOLES ON DIAPHRAGM CONNECTORS. ALL BOLTS ON DIAPHRAGMS MUST BE FINGER TIGHT AT ERECTION. BOLTS ARE TO BE TORQUED BEFORE CONCRETE DECK IS POURED. (Insert additional language on bolt tightening sequence for phased constructions).

SET ANCHOR BOLTS TO TEMPLATE OR IN PRE-FORMED HOLES. DO NOT DRILL UNLESS SPECIFICALLY INDICATED ON PLANS. FILL THE PRE-FORMED HOLES WITH NON-SHRINK GROUT. IN MASONRY PLATES, FILL THE CLEARANCE BETWEEN ANCHOR BOLTS AND HOLES WITH APPROVED NON-HARDENING CAULKING COMPOUND.

STABILITY OF PARTIAL GIRDERS AND COMPLETED GIRDERS IS TO BE MAINTAINED BY THE CONTRACTOR DURING ERECTION UNTIL ALL GIRDERS AND DIAPHRAGMS ARE IN-PLACE AND ALL BOLTS ARE PROPERLY INSTALLED. ERECTION LOADS INCLUDING SELF-WEIGHT OF THE STEEL MEMBERS, WIND LOADING AND CONSTRUCTION LIVE LOAD EFFECTS ARE TO BE EVALUATED BY THE CONTRACTOR FOR STABILITY, STRESSES AND DEFLECTIONS ON THE STEEL MEMBERS DURING ANY STAGE OF ERECTION.

AN ALTERNATE SLAB PLACEMENT SEQUENCE MAY BE PERMITTED AT THE REQUEST OF THE CONTRACTOR. SUBMIT FOR REVIEW AND APPROVAL TO THE DEPARTMENT A REVISED SLAB PLACEMENT SEQUENCE WITH SUPPORT CALCULATIONS AND COMPUTER STRESS ANALYSIS. SATISFY THE REQUIREMENTS OF THE ORIGINAL SLAB PLACEMENT SEQUENCE. OBTAIN WRITTEN APPROVAL PRIOR TO THE USE OF THE REVISED SLAB PLACEMENT SEQUENCE AND/OR CAMBER VALUES. NO COMPENSATION WILL BE ALLOWED FOR THE DEVELOPMENT AND APPROVAL OF THE REVISED SLAB PLACEMENT SEQUENCE AND CAMBER VALUES. THE DEPARTMENT WILL BE THE SOLE JUDGE OF THE ACCEPTABILITY OF THE REVISED SLAB PLACEMENT SEQUENCE AND CAMBER VALUES.

BLAST CLEAN THE FLAYING SURFACES OF SPLICES AND CONNECTIONS THAT REMAIN UNASSEMBLED FOR A PERIOD OF 12 MONTHS OR MORE FOLLOWING THE INITIAL CLEANING.

17. BEARINGS:
ALL ELASTOMERIC BEARINGS SHALL BE STEEL LAMINATED ELASTOMERIC DESIGNED AS PER AASHTO 14.7.5, METHOD B, AND SHALL CONFORM TO SECTION 623 OF THE STANDARD SPECIFICATIONS. PAYMENT SHALL BE INCIDENTAL TO (Insert appropriate item number).

18. PERFORATED PIPE UNDERDRAINS:
MINIMUM INSTALLATION SLOPE SHALL BE 0.02 FT./FT. CAP FREE ENDS.

SECTION 800

19. MAINTENANCE OF TRAFFIC:
MAINTENANCE OF TRAFFIC SHALL BE AS PER DETOUR PLAN. THE DETOUR SHALL REMAIN IN EFFECT UNTIL THE FINAL WARM MIX or P.C.C. PAVEMENT IS PLACED. ALL MOT ITEMS WITH THE EXCEPTION OF PORTABLE CHANGEABLE MESSAGE SIGNS AND FLAGGERS WILL BE INCLUDED IN ITEM #801500 - MAINTENANCE OF TRAFFIC, ALL INCLUSIVE.

20. TEMPORARY MOUNTED BARRIERS:
THE CONTRACTOR SHALL SUBMIT TO THE ENGINEER FOR APPROVAL A WORKING DRAWING SUBMITTAL DETAILING THE PROPOSED MEANS AND METHODS TO ANCHOR THE PORTABLE P.C.C. STRUCTURE MOUNTED BARRIER (DESIGNED FOR TL-(Insert value) IMPACT LOADING) AND TO REPAIR THE BOLT HOLES IN THE DECK. THE CONTRACTOR SHALL ADJUST THE LOCATION OF ANCHORS TO AVOID CONFLICT WITH BAR REINFORCEMENT IN THE DECK. PAYMENT INCIDENTAL TO ITEM #(Insert item number and description).

21. SAWCUTTING:
ALL PAVED AREAS TO BE RECONSTRUCTED OR WIDENED SHALL BE SAWCUT AT THE POINT WHERE THE NEW PAVEMENT IS TO TIE INTO THE EXISTING PAVEMENT. ALL HOT-MIX or P.C.C. SAWCUTTING SHALL BE FULL DEPTH, UNLESS OTHERWISE NOTED ON THE PLANS, OR AS DIRECTED BY THE ENGINEER.

SECTION 900

22. USE OF WELL POINTS:
SOIL BORINGS HAVE IDENTIFIED POTENTIAL ISSUES WITH A HIGH WATER TABLE (and/or) RUNNING SANDS, DESCRIBED AS (Insert description) AT ELEVATION (x). IF NEEDED AND WITH APPROVAL OF THE ENGINEER, A WELL POINT SYSTEM SHALL BE USED TO LOWER GROUNDWATER ELEVATION. PAYMENT UNDER ITEM #906005 - WELL POINT SYSTEM.

MISCELLANEOUS

23. DESIGN SPECIFICATIONS:
(A) DELDOT BRIDGE DESIGN MANUAL, 2016 EDITION
(B) AASHTO LRFD BRIDGE SPECIFICATIONS, 2014, 7TH EDITION, CUSTOMARY U.S. UNITS INCLUDING 2015 AND 2016 INTERIMS.
(C) PROVIDE MATERIALS AND PERFORM WORK IN ACCORDANCE WITH THE DELDOT STANDARD SPECIFICATIONS, AUGUST 2016.

24. LOADING:
-DEAD LOADS INCLUDE 25 PSF FOR FUTURE WEARING SURFACE ON DECK SLAB AND 15 PSF FOR STAY-IN-PLACE FORMS (INCLUDES CONCRETE IN FORM CORRUGATIONS). (the designer should also include barrier or fence loads with percentage of load applied to exterior and first interior beam).
-DESIGN LIVE LOADS INCLUDE HL-93 LOADING.
-FATIGUE DESIGN IS BASED ON THE FOLLOWING ONE DIRECTIONAL TRAFFIC VOLUMES: ADTT = (Insert value and year).
-LIVE LOAD DISTRIBUTION TO THE GIRDERS IS BASED ON THE AASHTO SIMPLIFIED METHOD or THE GRILLAGE METHOD (when using refined analysis).
-THERMAL LOADS AND MOVEMENTS ARE BASED ON THE MODERATE TEMPERATURE RANGE AS STIPULATED IN THE AASHTO LRFD DESIGN SPECIFICATIONS AS (Insert temperature range specified for each material type in AASHTO 3.12) . THE NORMAL TEMPERATURE SHALL BE CONSIDERED TO BE 68° F.
-LIVE LOAD DEFLECTION SHALL BE LIMITED TO L/(Insert value).
-FOR SEISMIC LOADS, CONSIDER SEISMIC PERFORMANCE ZONE I, WITH A SITE CLASS = (Insert A, B, C, D, E, or F) AND OPERATIONAL CATEGORY = (Insert CRITICAL, ESSENTIAL, or OTHER).
-FOR REINFORCEMENT DISTRIBUTION REQUIREMENTS, CONSIDER CLASS I or 2 EXPOSURE CRITERIA FOR DECKS.
-BARRIERS HAVE BEEN DESIGNED FOR (MASH or NCHRP 350) TEST LEVEL (Insert test level value) (TL-X).

25. EXISTING CONDITIONS (sample notes, use and/or revise as appropriate):
-ALL EXISTING DIMENSIONS AND ELEVATIONS SHOWN ARE BASED ON THE BEST AVAILABLE INFORMATION AND ARE APPROXIMATE ONLY. THE CONTRACTOR SHALL FIELD VERIFY ALL EXISTING DIMENSIONS, GEOMETRY, AND ELEVATIONS AS NECESSARY PRIOR TO ORDERING ANY MATERIALS AND COMMENCING CONSTRUCTION TO ENSURE PROPER FIT OF THE PROPOSED CONSTRUCTION. PAYMENT SHALL BE INCIDENTAL TO ITEM #763501 - CONSTRUCTION ENGINEERING.
-THE CONTRACTOR SHALL NOT CONSIDER ANY OF THE DATA ON THE EXISTING STRUCTURE SUPPLIED IN THE ORIGINAL DESIGN DRAWINGS OR MADE AVAILABLE BY THE DEPARTMENT OR ITS AUTHORIZED AGENTS AS POSITIVE REPRESENTATIONS OF ANY OF THE CONDITIONS THAT WILL BE ENCOUNTERED IN THE FIELD.
-THE INFORMATION SHOWN ON THE PLANS FOR THE (EXISTING BRIDGE or BRIDGES) (IS or ARE) NOT PART OF THE PLANS, PROPOSAL, OR CONTRACT AND IS NOT TO BE CONSIDERED A BASIS FOR COMPUTATION OF UNIT PRICES USED FOR BIDDING PURPOSES. THERE IS NO EXPRESSED OR IMPLIED AGREEMENT THAT INFORMATION IS CORRECTLY SHOWN. THE BIDDER IS NOT TO RELY ON THIS INFORMATION, BUT IS TO ASSUME THE POSSIBILITY THAT CONDITIONS AFFECTING THE COST AND/OR QUANTITIES OF THE WORK TO BE PERFORMED MAY DIFFER FROM THOSE INDICATED.

26. HYDRAULIC DATA:

DRAINAGE AREA:	xxx sq. miles	DESIGN FREQ.: (Insert design storm year)	YEARS
DESIGN DISCHARGE:	xxxx cfs	100-YEAR DISCHARGE:	xxxx cfs
EXISTING (DESIGN STORM) WSE:	xx.xx ft	PROPOSED (DESIGN STORM) WSE:	xx.xx ft
EXISTING (DESIGN STORM) VELOCITY:	xx.xx fps	PROPOSED (DESIGN STORM) VELOCITY:	xx.xx fps
EXISTING 100-YEAR WSE:	xx.xx ft	PROPOSED 100-YEAR WSE:	xx.xx ft
EXISTING 100-YEAR VELOCITY:	xx.xx fps	PROPOSED 100-YEAR VELOCITY:	xx.xx fps
EXISTING WATERWAY OPENING:	xxx sq. ft	PROPOSED WATERWAY OPENING:	xxx sq. ft

note for tidal areas the following additional information is required:
MEAN HIGH WATER ELEVATION: xx ft
MEAN LOW WATER ELEVATION: xx ft
VERTICAL UNDER CLEARANCE: xx ft

27. SCOUR ANALYSIS:
SCOUR DESIGN FREQUENCY: xxx YEARS or OVERTOPPING (as per guidance of section 104.4 - 'scour evaluation and protection' and figure 104-8)
SCOUR DESIGN FLOOD DISCHARGE: xxx cfs
SCOUR DESIGN FLOOD VELOCITY: xx fps (AT BRIDGE OUTLET)
WATER SURFACE ELEVATION: xx ft (IMMEDIATELY UPSTREAM OF BRIDGE)
CALCULATED SCOUR DEPTH AT EACH SUBSTRUCTURE UNIT: xx ft (list all units)

SCOUR COUNTERMEASURES HAVE BEEN DESIGNED FOR THE SCOUR DESIGN FLOOD IN ACCORDANCE WITH HEC 23 - BRIDGE SCOUR AND STREAM INSTABILITY COUNTERMEASURES and/or HEC 14 - HYDRAULIC DESIGN OF ENERGY DISSIPATORS FOR CULVERTS AND CHANNELS (as appropriate).

28. ROADWAY CLEARANCES:
A MINIMUM OF (Insert value) SHALL BE MAINTAINED ABOVE ALL ROADWAYS.

MISCELLANEOUS (CONTINUED)

29. EMBANKMENTS:
BRIDGE EMBANKMENTS SHALL SIT UNDISTURBED FOR A MINIMUM (Insert number of days)-DAY PERIOD AFTER PLACED TO FULL HEIGHT, OR AS DIRECTED BY THE ENGINEER. FULL HEIGHT SHALL BE TO THE BOTTOM OF ABUTMENT FOOTER ELEVATION. THE SETTLEMENT SHALL NOT EXCEED (Insert value in inches) PER WEEK BEFORE RESUMING WORK ON THE EMBANKMENT, OR AS DIRECTED BY THE ENGINEER.

30. CONTINGENT QUANTITIES:
THESE CONTRACT DRAWINGS HAVE BEEN PREPARED BASED ON ORIGINAL CONTRACT PLANS AND FIELD INSPECTION NOTES. ACTUAL CONDITIONS MAY REQUIRE MODIFICATION IN CONSTRUCTION DETAILS AND WORK QUANTITIES. ALL DIMENSIONS AND DETAILS SHOWN ON THE PLANS SHALL BE VERIFIED BY THE CONTRACTOR PRIOR TO ORDERING ANY MATERIALS. THE ESTIMATED QUANTITIES FOR THE FOLLOWING PAY ITEMS INCLUDE CONTINGENCY FACTORS TO ACCOUNT FOR THE ANTICIPATED VARIATIONS IN THE ACTUAL QUANTITY.
- (Insert item numbers, descriptions, and percent of contingency estimated)

31. UTILITIES:
SEE UTILITY STATEMENT AND UTILITY RELOCATION PLAN SHEETS FOR FURTHER INFORMATION ON UTILITY COORDINATION.

32. ENVIRONMENTAL COMPLIANCE:
REFER TO THE ENVIRONMENTAL COMPLIANCE PLAN FOR RESTRICTIONS AND ADDITIONAL GUIDANCE THAT MAY BE ASSOCIATED TO THIS PROJECT.

DESIGNER NOTES

1. THE 'BRIDGE PROJECT NOTES' CONTAINS A GROUP OF TYPICAL NOTES USED IN DELDOT PROJECTS, AND IS ORGANIZED INTO DELDOT STANDARD SPECIFICATIONS SECTIONS. THE DESIGNER SHOULD USE THE NOTES AS SHOWN ON BOTH SHEETS, AND MODIFY THE NOTES AS NECESSARY TO MAKE THESE NOTES PROJECT-SPECIFIC. ALSO THE DESIGNER SHOULD USE ONLY APPLICABLE NOTES AS SHOWN IN THE SAID TWO SHEETS. FURTHERMORE, IT IS THE DESIGNER'S RESPONSIBILITY TO ENSURE ALL APPROPRIATE PROJECT NOTES ARE INCLUDED IN THE PLAN SET, WHICH ALSO INCLUDE ANY PROJECT SPECIFIC NOTES NOT LISTED UNDER DETAIL NO. 301.01.
2. FOR BRIDGES UNDER THEIR OWN CONTRACTS, MICROSTATION CELLS AND .DGN FILES FOR THE PROJECT NOTES SHEET ALONG WITH GENERAL AND TYPICAL PROJECT NOTES CAN BE FOUND IN THE DELDOT DESIGN RESOURCE CENTER. THE GENERAL AND TYPICAL PROJECT NOTES AS FOUND ON THE DESIGN RESOURCE CENTER SHOULD BE USED AS APPROPRIATE ALONG WITH PROJECT-SPECIFIC TYPICAL BRIDGE NOTES.
3. THE 'INDEX OF BRIDGE SHEETS' TABLE IS ONLY REQUIRED FOR PROJECTS WHERE BRIDGES ARE PART OF A LARGER PROJECT (TYPICALLY PROJECT DEVELOPMENT PROJECTS). THE INDEX OF BRIDGE SHEETS IS TYPICALLY INCLUDED WITH BRIDGE PROJECT NOTES. THE INDEX OF SHEETS FOR BRIDGES UNDER THEIR OWN CONTRACTS IS USUALLY SHOWN ON THE TITLE SHEET AS DEFAULT.
4. THE 'QUANTITIES' TABLE IS ONLY REQUIRED FOR PROJECTS WHERE BRIDGES ARE PART OF A LARGER PROJECT. QUANTITIES ARE TYPICALLY INCLUDED WITH BRIDGE PROJECT NOTES.
5. THE 'LOAD RATING SUMMARY' TABLE IS REQUIRED TO BE SHOWN ON ALL BRIDGE PROJECT PLAN SETS. LOAD RATING SUMMARY IS TYPICALLY INCLUDED WITH BRIDGE PROJECT NOTES. INFORMATION FOR THE TABLE IS TYPICALLY PROVIDED BY DELDOT'S BRIDGE MANAGEMENT SECTION AFTER THE SEMI-FINAL CONSTRUCTION PLAN SUBMITTAL.
6. UNDER 'BRIDGE PROJECT NOTES' NOTE 2, THIS NOTE IS TYPICALLY NECESSARY FOR PROJECTS WHERE INFORMATION ON ROCK PROFILE VARIATION IS LIMITED, THUS REQUIRING AN ADDITIONAL CONTINGENCY OF AT LEAST 25% FOR THE QUANTITY OF SEVERAL ITEMS.
7. UNDER 'BRIDGE PROJECT NOTES' NOTE 3, REFER TO SECTION 210.5.2.2 FOR MORE INFORMATION ON DETERMINING THE APPROPRIATE PROJECT-SPECIFIC MAXIMUM PERMISSIBLE LEVEL FOR PEAK PARTICLE VELOCITY (PPV).
8. UNDER 'BRIDGE PROJECT NOTES' NOTE 10, AN EXAMPLE NOTE WAS USED FOR EPOXY COATED BARS. IF OTHER TYPE OF BARS ARE USED (REFER TO DETAIL NO. 301.02), THE THIRD AND FOURTH SUB NOTES OF THE BAR REINFORCEMENT NOTE SHOULD BE REVISED TO INCLUDE SPECIAL PROVISIONS APPLICABLE TO THE ITEM.
9. UNDER 'BRIDGE PROJECT NOTES' NOTE 16, THE DESIGNER SHOULD TAKE CARE TO INCLUDE ONLY RELEVANT AND PROJECT SPECIFIC NOTES FOR STEEL MEMBERS USED IN THE PROJECT. SOME OF THE NOTES APPLY ONLY TO CURVED GIRDERS OR MULTI-SPAN STRUCTURES, AND THESE NOTES SHOULD BE REMOVED IF THE PROJECT ONLY INCLUDES STRAIGHT GIRDERS OR SIMPLE SPAN STRUCTURES.
10. UNDER 'BRIDGE PROJECT NOTES' NOTE 17, AN EXAMPLE NOTE WAS USED FOR STEEL LAMINATED ELASTOMERIC BEARING PADS. IF OTHER BEARING TYPES ARE USED, THE DESIGNER SHOULD LIST WHICH SECTION OF AASHTO LRFD BRIDGE DESIGN SPECIFICATIONS WAS USED IN THE DESIGN, AND TO INCLUDE SPECIAL PROVISIONS APPLICABLE TO THE ITEM.
11. UNDER 'BRIDGE PROJECT NOTES' NOTE 22, REFER TO SECTION 210.4.7D FOR MORE INFORMATION ON RUNNING SANDS.
12. UNDER 'BRIDGE PROJECT NOTES' NOTE 24, THE INFORMATION ON SITE CLASSES CAN BE FOUND IN TABLE A3.10.3.1-1. INFORMATION ON OPERATIONAL CATEGORY CAN BE FOUND IN A3.10.7.
13. UNDER 'BRIDGE PROJECT NOTES' NOTE 24, THE INFORMATION ON CLASS EXPOSURE CRITERIA CAN BE FOUND IN A5.7.3.4.
14. UNDER 'BRIDGE PROJECT NOTES' NOTE 30, THIS NOTE IS TYPICALLY NECESSARY FOR PROJECTS WHERE INFORMATION ON CERTAIN EXISTING CONDITIONS (REHABILITATION PROJECTS OR GEOTECHNICAL INFORMATION FOR INSTANCE) ARE LIMITED, THUS REQUIRING AN ADDITIONAL CONTINGENCY OF AT LEAST 25% FOR SEVERAL ITEM NUMBERS.
15. THE DESIGNER SHOULD PLACE THE FOLLOWING STANDARD NOTE ON EACH OF THE EXISTING BRIDGE PLANS WHICH ARE TO BE SUPPLIED TO PROSPECTIVE BIDDERS: 'BIDDERS ARE ADVISED TO FIELD VERIFY INFORMATION PRESENTED. THE DATA SHOWN HEREIN IS NOT PART OF THE PLANS, PROPOSAL, OR CONTRACT, AND IS NOT TO BE CONSIDERED AS A BASIS FOR COMPUTATION FOR ANY PURPOSE'.

INDEX OF BRIDGE SHEETS

BR. SHEET №	TABLE OF CONTENTS
TOTAL BRIDGE SHEETS: XX	

QUANTITIES

ITEM №	ITEM TITLE	UNIT	QUANTITY

LOAD RATING SUMMARY

DESIGN VEHICLE	RATING FACTOR	RATING WEIGHT (TON)	CONTROLLING MEMBER	CONTROLLING POINT	LOAD EFFECT
HL-93 TRUCK (INVENTORY)	X.XX	N/A	XXXXXXXXXXXXXXX	XXX	XXXXXXX
HL-93 TANDEM (INVENTORY)	X.XX	N/A	XXXXXXXXXXXXXXX	XXX	XXXXXXX
HL-93 TRUCK TRAIN (INVENTORY)	X.XX	N/A	XXXXXXXXXXXXXXX	XXX	XXXXXXX
HS-20 (INVENTORY)	X.XX	XX.XX	XXXXXXXXXXXXXXX	XXX	XXXXXXX
HL-93 TRUCK (OPERATING)	X.XX	N/A	XXXXXXXXXXXXXXX	XXX	XXXXXXX
HL-93 TANDEM (OPERATING)	X.XX	N/A	XXXXXXXXXXXXXXX	XXX	XXXXXXX
HL-93 TRUCK TRAIN (OPERATING)	X.XX	N/A	XXXXXXXXXXXXXXX	XXX	XXXXXXX
HS-20 (OPERATING)	X.XX	XX.XX	XXXXXXXXXXXXXXX	XXX	XXXXXXX
DE S220 & LEGAL-LANE (LEGAL)	X.XX	XX.XX	XXXXXXXXXXXXXXX	XXX	XXXXXXX
DE S335 & LEGAL-LANE (LEGAL)	X.XX	XX.XX	XXXXXXXXXXXXXXX	XXX	XXXXXXX
DE S437 & LEGAL-LANE (LEGAL)	X.XX	XX.XX	XXXXXXXXXXXXXXX	XXX	XXXXXXX
DE S330 & LEGAL-LANE (LEGAL)	X.XX	XX.XX	XXXXXXXXXXXXXXX	XXX	XXXXXXX
DE S435 & LEGAL-LANE (LEGAL)	X.XX	XX.XX	XXXXXXXXXXXXXXX	XXX	XXXXXXX
DE S540 & LEGAL-LANE (LEGAL)	X.XX	XX.XX	XXXXXXXXXXXXXXX	XXX	XXXXXXX

NOTE: LOAD RATING INCLUDES FUTURE WEARING SURFACE AS NOTED IN THE PLANS.

STANDARD BAR BENDS

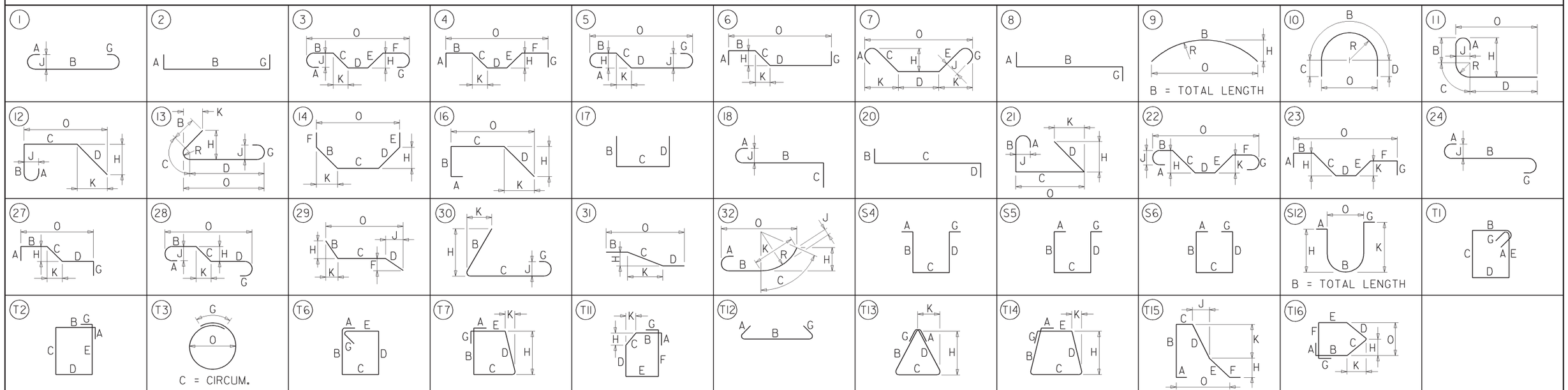

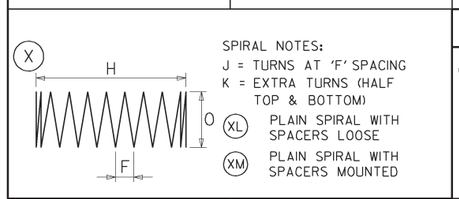

SUPPLEMENTAL BAR BENDS

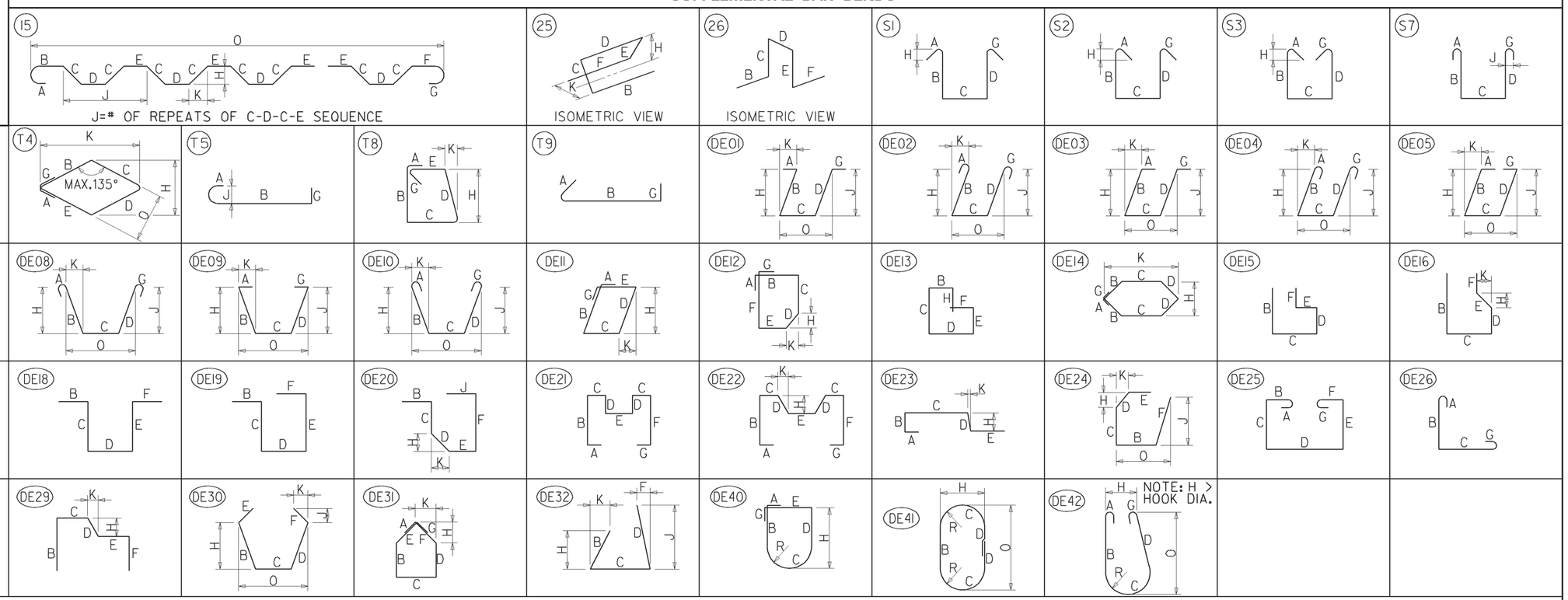

DELAWARE DEPARTMENT OF TRANSPORTATION
BRIDGE DESIGN MANUAL

REINFORCEMENT BAR FABRICATION DETAILS

NOT TO SCALE

ISSUE DATE	
10/01/2015	

DETAIL No. 301.02

SHEET No. 1 of 2

ASTM STANDARD ENGLISH REINFORCING BARS				RECOMMENDED END HOOKS, APPLICABLE TO ALL GRADES				STIRRUP AND TIE HOOKS, APPLICABLE TO ALL GRADES			
	NOMINAL DIMENSIONS				180° HOOKS		90° HOOKS		90° HOOK	135° HOOK	
BAR SIZE	DIAMETER (INCHES)	AREA (INCHES^2)	WEIGHT (LBS./FT.)	D	A OR G	J	A OR G	D	A OR G	A OR G	H
3	0.375	0.110	0.376	2¼"	5"	3"	6"	1½"	4"	4"	2½"
4	0.500	0.200	0.668	3"	6"	4"	8"	2"	4½"	4½"	3"
5	0.625	0.310	1.043	3¾"	7"	5"	10"	2½"	6"	5½"	3¾"
6	0.750	0.440	1.502	4½"	8"	6"	1-0"	4½"	1-0"	8"	4½"
7	0.875	0.600	2.044	5¼"	10"	7"	1-2"	5¼"	1-2"	9"	5¼"
8	1.000	0.790	2.670	6"	11"	8"	1-4"	6"	1-4"	10½"	6"
9	1.128	1.000	3.400	9½"	1-3"	11¾"	1-7"				
10	1.270	1.270	4.303	10¾"	1-5"	1-1¼"	1-10"				
11	1.410	1.560	5.313	1-0"	1-7"	1-2¾"	2-0"				
14	1.693	2.250	7.650	1-6¼"	2-3"	1-9¾"	2-7"				
18	2.257	4.000	13.600	2-0"	3-0"	2-4½"	3-5"				

COMMON STOCK STYLES OF WELDED WIRE FABRIC			
STYLE DESIGNATION	STEEL AREA (INCHES^2 PER FT.)		APPROX. WEIGHT (LBS. PER 100 SQ. FT.)
	LONGIT.	TRANS.	
ROLLS			
6x6-W1.4xW1.4	0.028	0.028	21
6x6-W2.0xW2.0	0.040	0.040	29
6x6-W2.9xW2.9	0.058	0.058	42
6x6-W4.0xW4.0	0.080	0.080	58
4x4-W1.4xW1.4	0.042	0.042	31
4x4-W2.0xW2.0	0.060	0.060	43
4x4-W2.9xW2.9	0.087	0.087	62
4x4-W4.0xW4.0	0.120	0.120	85
3x3-W1.4xW1.4	0.056	0.056	39
SHEETS			
6x6-W2.9xW2.9	0.058	0.058	42
6x6-W4.0xW4.0	0.080	0.080	58
6x6-W5.5xW5.5	0.110	0.110	80
4x4-W4.0xW4.0	0.120	0.120	85

STIRRUP AND TIE HOOKS

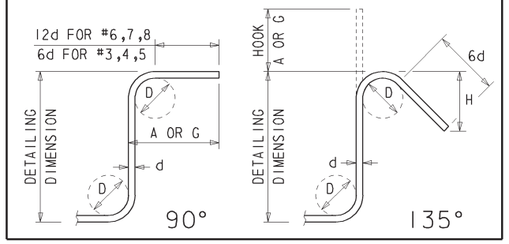

180° AND 90° END HOOKS

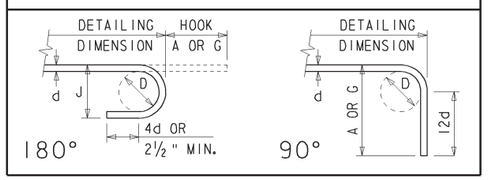

ENLARGED VIEW SHOWING BAR BENDING DETAILS

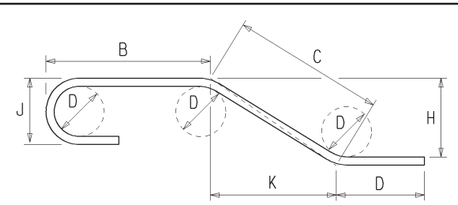

TYPICAL REINFORCEMENT BAR BEND NOTES

1. DETAILS SHOWN ON SHEET 1 REPRESENT BAR BEND TYPES.
2. ALL DIMENSIONS ARE OUT-TO-OUT, EXCEPT "A" AND "G" ON STD. 180° AND 135° HOOKS.
3. "J" DIMENSIONS ON 180° HOOKS TO BE SHOWN ONLY WHERE NECESSARY TO RESTRICT HOOK SIZE, OTHERWISE STANDARD 'ACI' HOOKS ARE TO BE USED.
4. WHERE "J" IS NOT SHOWN, "J" WILL BE KEPT EQUAL TO OR LESS THAN "H" ON TYPES 3, 5 AND 22. WHERE "J" CAN EXCEED "H", IT SHALL BE SHOWN.
5. "H" DIMENSIONS OF STIRRUPS TO BE SHOWN AS NEEDED TO FIT WITHIN THE CONCRETE.
6. UNLESS OTHERWISE NOTED, DIAMETER "D" IS THE SAME FOR ALL BENDS AND HOOKS ON A BAR (EXCEPT FOR BEND TYPES 11 AND 13).
7. WHERE SLOPE DIFFERS FROM 45° OFFSET, "H" AND "K" MUST BE SHOWN.
8. WHERE BARS ARE TO BE BENT MORE ACCURATELY THAN STANDARD BENDING TOLERANCES, BENDING DIMENSIONS REQUIRING CLOSER FABRICATION SHOULD HAVE LIMITS INDICATED.
9. FOR RECOMMENDED DIAMETER "D", OF BENDS, HOOKS, ETC., REFER TO THE TABLE ON THIS SHEET.
10. TYPES S1 - S6, T1 - T3 AND T6 - T9 ARE APPLICABLE TO BAR SIZES #3 THROUGH #8 ONLY.

GENERAL NOTES

1. ALL REINFORCEMENT STEEL BARS SHOWN SHALL MEET THE REQUIREMENTS OF ASTM A615, A706, A767, A775, A955, OR A1035.
2. ALL REINFORCEMENT STEEL BARS SHALL BE DEFORMED UNLESS OTHERWISE SPECIFIED ON THE PLANS.
3. ALL REINFORCEMENT STEEL BARS SHALL BE DENOTED BY ITS BAR SIZE.
4. ALL MARK 'LOCATION PREFIXES' SHALL CONSIST OF TWO LETTERS AND ARE AS FOLLOWS:
   AB = ABUTMENT, AS = APPROACH SLAB, BC = BOX CULVERT, BW = BACKWALL, CL = COLUMN, DK = DECK, DL = DOWEL, DP = DIAPHRAGM, FT = FOOTING, HW = HEADWALL, MB = MISC. BARS, MS = MOMENT SLAB, PA = PARAPET, PR = PIER, RF = RIGID FRAME, SC = SHEETPILE CAP, SS = SLEEPER SLAB, TW = TOEWALL, WL = WALL (UNIQUE LOCATION), AND WW = WINGWALL.
5. BAR MARK SUFFIXES:
   A. SUFFIX 'E' DENOTES EPOXY COATED BAR REINFORCEMENT
   B. SUFFIX 'G' DENOTES GALVANIZED BAR REINFORCEMENT
   C. SUFFIX 'S' DENOTES STAINLESS STEEL BAR REINFORCEMENT
   D. SUFFIX 'X' DENOTES MMFX BAR REINFORCEMENT

DESIGNER NOTES

1. BAR MARKS SHALL BE NAMED IN THE FOLLOWING FORMAT:
   LOCATION PREFIX --> BAR SIZE --> MARK COUNT (TWO DIGITS) --> SUFFIX 'E', 'G', 'S', 'X', OR BLANK (FOR BLACK BAR) FOR EXAMPLE: AB501E, BW617G, PA803X, MS537, OR DK719S, ETC.
2. SPLICING & LAPPING OR REINFORCEMENT BARS:
   - ALL INFORMATION PERTAINING TO MINIMUM REQUIRED SPLICING & LAPPING LENGTHS SHOULD BE CLEARLY SHOWN ON THE PLANS.
   - MINIMUM LENGTHS SHALL BE IN ACCORDANCE WITH A5.11.5 FOR REINFORCING BARS AND A5.11.6 FOR WELDED WIRE FABRIC.
   - INCREASE THE BAR LAPS BY 20% FOR A THREE-BAR BUNDLE. ADD 33% FOR A FOUR-BAR BUNDLE. DO NOT OVERLAP INDIVIDUAL BAR SPLICES WITHIN THE BUNDLE.
3. REFER TO THE ENGINEERING INSTRUCTIONS DOCUMENT: BR-10-001 FOR GUIDANCE ON INSTALLING AND USING THE DELDOT REBAR SHEET PROGRAM. THE DOCUMENT CAN BE FOUND IN THE FOLLOWING LINK:
   http://www.deldot.gov/Information/business/drc/pd_files/plan_development/el-br-10-001_rebar_program.pdf
4. ALL STANDARD BAR BENDS WILL BE INDICATED ON THE REBAR SCHEDULE. THE SUPPLEMENTAL BAR BENDS USED FOR THE PROJECT WILL BE SHOWN ON THE REBAR SCHEDULE.
5. ALL INFORMATION PERTAINING TO WELDED WIRE FABRIC ON THIS SHEET ARE FOR INFORMATION PURPOSES ONLY. WELDED WIRE FABRIC IS NOT INCLUDED IN THE REBAR PROGRAM AND THEREFORE WILL NOT BE SHOWN ON THE REBAR SHEET.
6. DETAILS AND NOTES AS SHOWN UNDER THIS DETAIL ARE SOLELY FOR FABRICATION OF REINFORCEMENT BAR. FOR FURTHER GUIDANCE ON DESIGN AND DETAILING OF BAR REINFORCEMENT, REFER TO SECTIONS 106, 107, 109, AND 205.
7. 'TYPICAL REINFORCEMENT BAR BEND NOTES' ARE AUTOMATICALLY GENERATED BY THE REBAR PROGRAM.

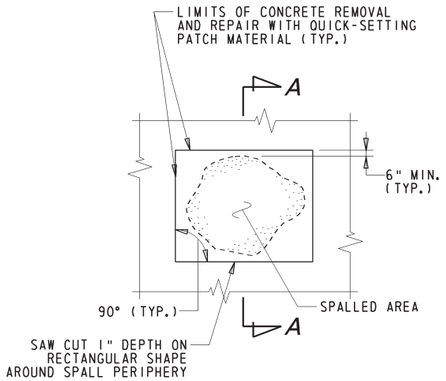

PLAN

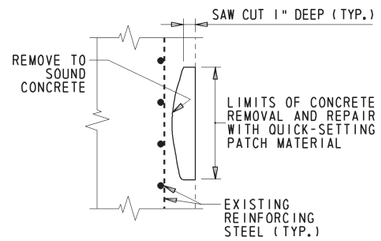

SECTION A-A

SHALLOW SPALL REPAIR

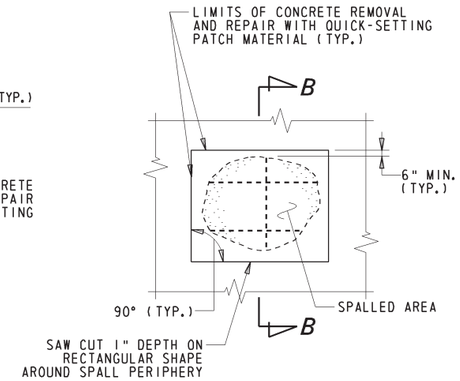

PLAN

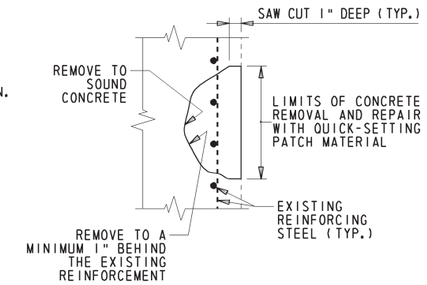

SECTION B-B

DEEP SPALL REPAIR

DESIGNER NOTES

1. THE DETAILS DEPICTED ON THIS SHEET ARE LARGELY DERIVED FROM SECTION 628 OF THE STANDARD SPECIFICATIONS. THE PURPOSE OF THE DETAILS SHOWN ON THIS SHEET IS TO ASSIST WITH VISUALIZING THE REPAIR METHODS TYPICALLY USED ON DELDOT PROJECTS.
2. THE DETAILS AND NOTES AS SHOWN ON THIS SHEET ARE REQUIRED TO BE SHOWN ON PLAN SETS THAT REQUIRE SUCH REPAIRS.
3. IF SUCH INFORMATION IS READILY AVAILABLE DURING PLAN DEVELOPMENT, THE DESIGNER SHOULD SHOW ON THE PLANS THE APPROXIMATE LOCATIONS AND DIMENSIONS OF THE SPALL REPAIRS AT BOTH SUBSTRUCTURE AND DECK LOCATIONS. THE QUANTITY CALCULATIONS SHOULD ALSO CLEARLY IDENTIFY AND EXPLAIN IN DEPTH WHICH ITEMS ARE TO BE USED AND THEIR ESTIMATED QUANTITIES AT EACH LOCATIONS, WITH ANY CONTINGENCIES OR TOKEN QUANTITIES ASSUMED.
4. THE DETAILS SHOWN FOR 'REHABILITATION OF PCC MASONRY' UTILIZES AN EXAMPLE USING PARTIAL RECONSTRUCTION OF AN EXISTING PIER CAP. THE DESIGNER SHOULD SHOW APPROXIMATE LOCATIONS AND ESTIMATED QUANTITY OF CONCRETE TO BE REMOVED AT EACH STRUCTURAL UNIT ON THE PLANS THAT WILL REQUIRE PARTIAL RECONSTRUCTION.
5. REPAIR DETAILS FOR PRESTRESSED OR POST-TENSIONED CONCRETE ELEMENTS WERE INTENTIONALLY OMITTED FROM THIS DETAIL. THESE TYPES OF REPAIRS ARE UNIQUE AND WILL VARY FROM PROJECT TO PROJECT. THE DESIGNER IS RESPONSIBLE FOR DEVELOPING APPROPRIATE REPAIR DETAILS FOR THESE TYPES OF CONCRETE ELEMENTS.

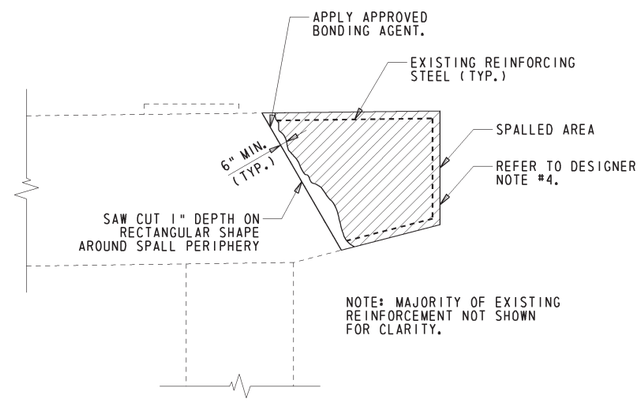

REHABILITATION OF PCC MASONRY

SHALLOW SPALL REPAIR NOTES

1. SHALLOW SPALLS ARE DEFINED AS PATCHES THAT DO NOT EXTEND BELOW THE TOP MAT OF REBAR.
2. ALL WORK INVOLVING METHODS OF CONCRETE REMOVAL; CLEANING OF CONCRETE SURFACE; SURFACE PREPARATION; AND CONCRETE PLACEMENT SHALL BE PERFORMED IN ACCORDANCE WITH SUBSECTION 628.03(E) OF THE STANDARD SPECIFICATIONS. PAYMENT INCIDENTAL TO 628040 - SHALLOW SPALL REPAIR.
3. FOR ANY SHALLOW SPALL REPAIR TO TAKE PLACE WITHIN THE SPLASH ZONE OR UNDERWATER, THE CONTRACTOR SHALL SUBMIT A WORKING DRAWING FOR APPROVAL IN ACCORDANCE WITH SUBSECTION 628.03(E)(2).

DEEP SPALL REPAIR NOTES

1. DEEP SPALLS ARE DEFINED AS PATCHES THAT EXTEND BELOW THE TOP MAT OF REINFORCEMENT.
2. ALL WORK INVOLVING METHODS OF CONCRETE REMOVAL; CLEANING OF CONCRETE SURFACE AND EXISTING REINFORCEMENT; REPAIRING OR REPLACING DAMAGED REINFORCEMENT AS RESULT OF CONSTRUCTION ACTIVITIES OR SECTION LOSS; PRESENCE OF CONTRACTION OR EXPANSION JOINTS; SURFACE PREPARATION; AND CONCRETE PLACEMENT SHALL BE PERFORMED IN ACCORDANCE WITH SUBSECTION 628.03(E) OF THE STANDARD SPECIFICATIONS. PAYMENT INCIDENTAL TO 628041 - DEEP SPALL REPAIR.
3. FOR ANY DEEP SPALL REPAIR TO TAKE PLACE WITHIN THE SPLASH ZONE OR UNDERWATER, THE CONTRACTOR SHALL SUBMIT A WORKING DRAWING IN ACCORDANCE WITH SUBSECTION 628.03(E)(2).

DECK REPAIR NOTES

1. ALL WORK INVOLVING METHODS OF CONCRETE REMOVAL; CLEANING OF CONCRETE SURFACE AND EXISTING REINFORCEMENT; REPAIRING OR REPLACING DAMAGED REINFORCEMENT AS RESULT OF CONSTRUCTION ACTIVITIES OR SECTION LOSS; PRESENCE OF CONTRACTION OR EXPANSION JOINTS; SURFACE PREPARATION; AND CONCRETE PLACEMENT SHALL BE PERFORMED IN ACCORDANCE WITH SUBSECTION 628.03(F) OF THE STANDARD SPECIFICATIONS. PAYMENT INCIDENTAL TO 628050 - DECK REPAIR, ½" TO 1" DEPTH; 628051 - DECK REPAIR, 1" TO 3" DEPTH; 628052 - DECK REPAIR, 3" TO < FULL DEPTH; AND/OR 628053 - DECK REPAIR, FULL DEPTH.
2. MILLING AND OVERLAY SHALL BE PAID FOR UNDER THEIR RESPECTIVE ITEMS.

REHABILITATION OF PCC MASONRY

1. REHABILITATION OF PCC MASONRY IS DEFINED AS DEEP SPALL PATCHES THAT EXCEED THE 0.5 C.Y. THRESHOLD IN A SINGLE AREA.
2. ALL WORK INVOLVING METHODS OF CONCRETE REMOVAL; CLEANING OF CONCRETE SURFACE AND EXISTING REINFORCEMENT; REPAIRING OR REPLACING DAMAGED REINFORCEMENT AS RESULT OF CONSTRUCTION ACTIVITIES OR SECTION LOSS; PRESENCE OF CONTRACTION OR EXPANSION JOINTS; SURFACE PREPARATION; AND CONCRETE PLACEMENT SHALL BE PERFORMED IN ACCORDANCE WITH SUBSECTION 628.03(E) OF THE STANDARD SPECIFICATIONS. PAYMENT INCIDENTAL TO 628042 - REHABILITATION OF PCC MASONRY.
3. FOR ANY WORK INCLUDED UNDER REHABILITATION OF PCC MASONRY TO TAKE PLACE WITHIN THE SPLASH ZONE OR UNDERWATER, THE CONTRACTOR SHALL SUBMIT A WORKING DRAWING IN ACCORDANCE WITH SUBSECTION 628.03(E)(2).

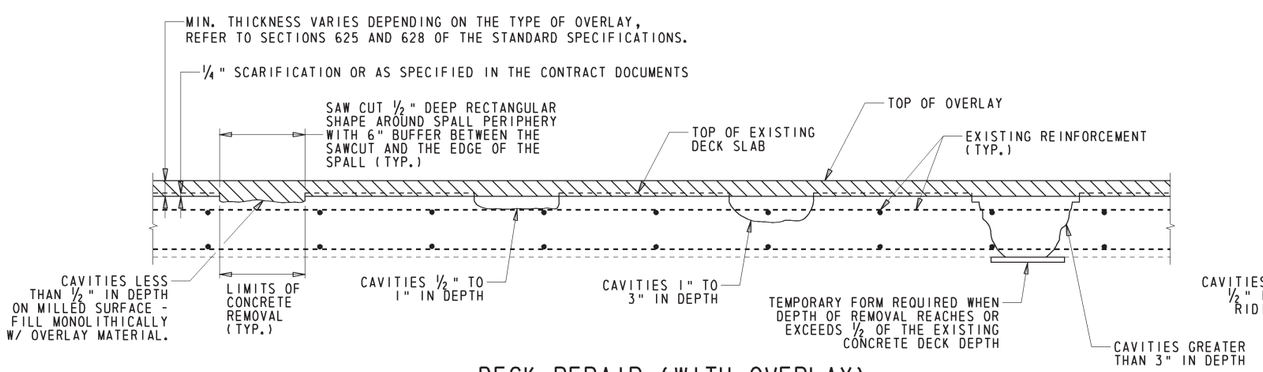

DECK REPAIR (WITH OVERLAY)

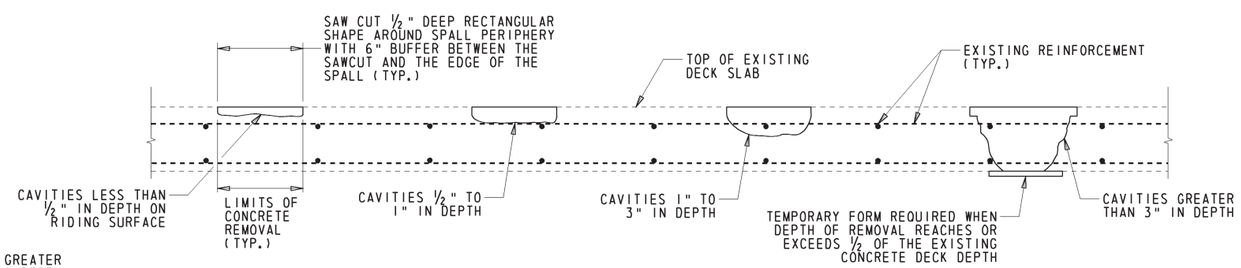

DECK REPAIR (WITHOUT OVERLAY)

DELAWARE DEPARTMENT OF TRANSPORTATION **BRIDGE DESIGN MANUAL**	CONCRETE REPAIR DETAILS	NOT TO SCALE	ISSUE DATE 10/01/2015 10/01/2016	DETAIL No. 301.03 SHEET No. 1 of 1

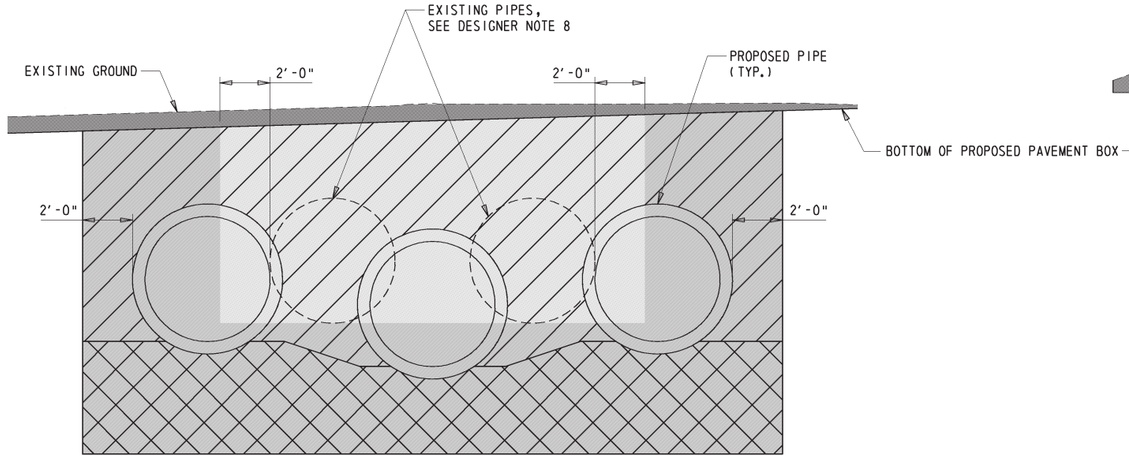

EXAMPLE 1

SEE DESIGNER NOTE 1

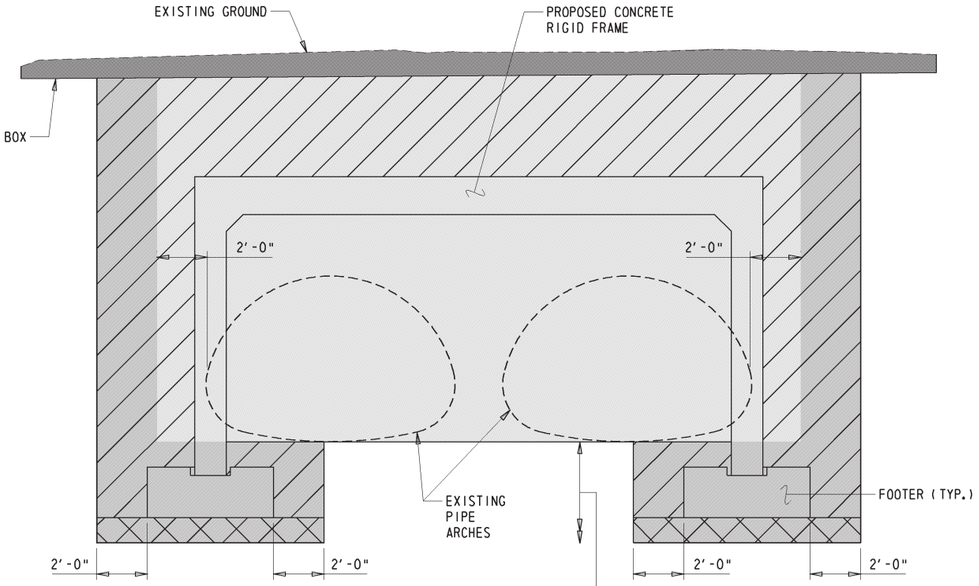

EXAMPLE 2

SEE DESIGNER NOTE 2

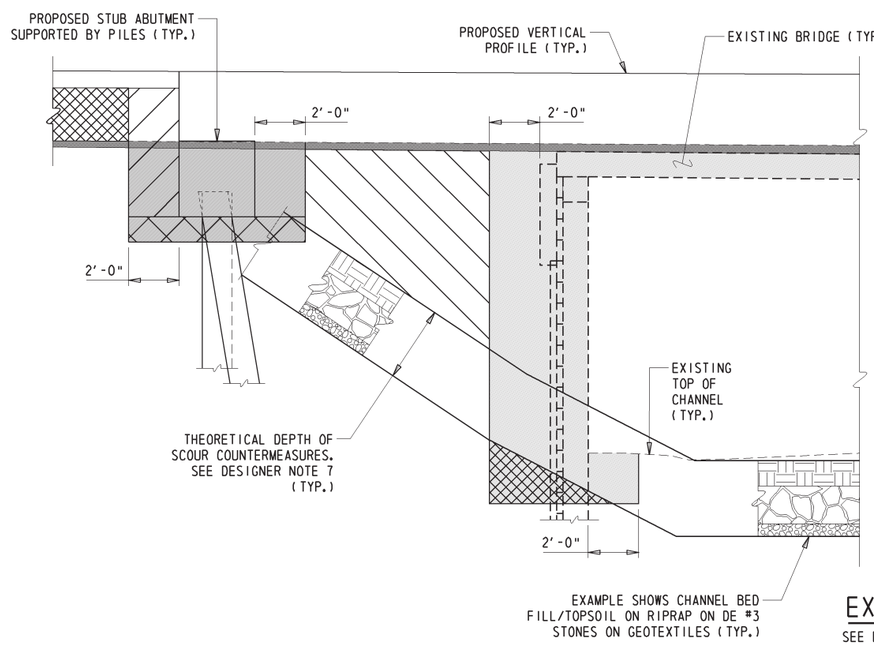

EXAMPLE 3

SEE DESIGNER NOTE 3

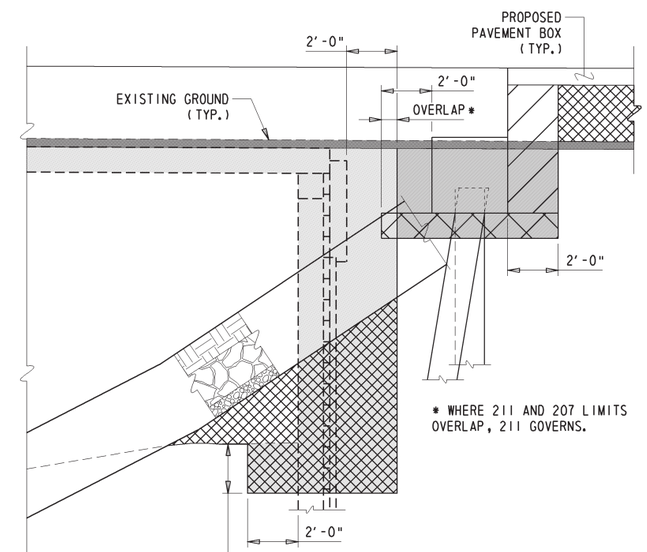

DEPTH OF 211 REMOVAL SHOWN AS 2'-0" BELOW EXISTING CHANNEL. DESIGNER MUST SPECIFY DEPTH OF 211 LIMITS IN PROJECT NOTES (TYP.), WHICH MAY INCLUDE REMOVAL OF SUBSTRUCTURE IN ITS ENTIRELY, REMOVED AT SPECIFIED DISTANCE BELOW THE GROUND OR CHANNEL, OR LEFT IN PLACE.

- = 211000 - REMOVAL OF STRUCTURES AND OBSTRUCTIONS
- = 207000 - STRUCTURAL EXCAVATION
- = 202000 - EXCAVATION AND EMBANKMENT
- = 203000 - CHANNEL EXCAVATION (SEE DESIGNER NOTE 11)
- = 207020 - STRUCTURAL BACKFILL (BORROW TYPE B) or 207021 - STRUCTURAL BACKFILL (BORROW TYPE C) or 208000 - FLOWABLE FILL (pipes only)
- = SUBFOUNDATION MATERIAL DETERMINED BY DESIGN (SEE DESIGNER NOTE 6)
- = 209XXX - BORROW TYPE (A, B, C, OR F) DETERMINED BY DESIGN

DELAWARE DEPARTMENT OF TRANSPORTATION **BRIDGE DESIGN MANUAL**	EXCAVATION AND BACKFILL PAY LIMIT DETAILS	NOT TO SCALE	ISSUE DATE 10/01/2016 — DETAIL No. 301.04 SHEET No. 1 of 2

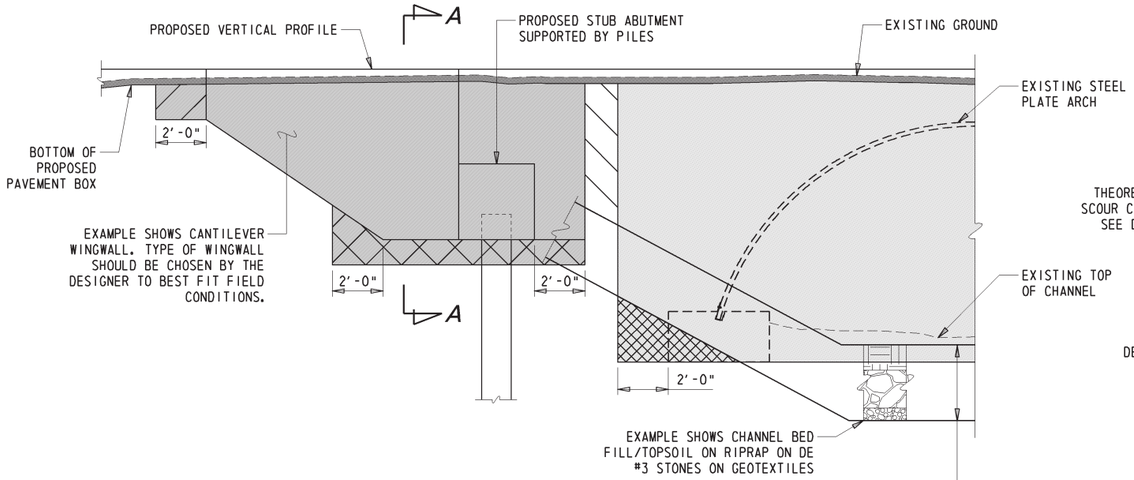

EXAMPLE 4

SEE DESIGNER NOTE 4

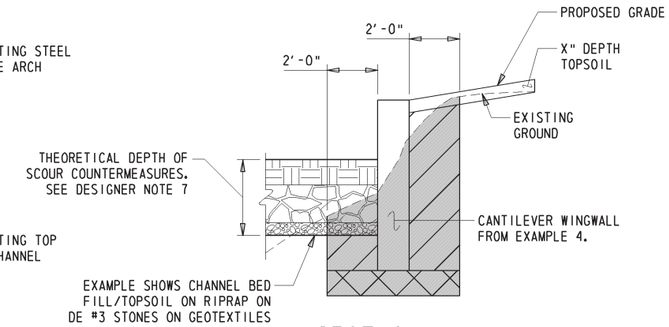

SECTION A-A

SEE DESIGNER NOTE 4

DESIGNER NOTES

1. EXAMPLE 1 ASSUMES THAT THREE 5'-0" DIA. REINFORCED CONCRETE PIPES REPLACE TWO EXISTING 5'-0" CORRUGATED METAL PIPES. IT IS ASSUMED THAT EXTRA EXCAVATION OF 3'-6" BELOW BOTTOM OF THE LOW FLOW CHANNEL PIPE IS REQUIRED.
2. EXAMPLE 2 ASSUMES THAT A CONCRETE RIGID FRAME (20'-0" CLEAR SPAN) REPLACES TWO EXISTING 117" X 79" PIPE ARCHES. IT IS ASSUMED THAT EXTRA EXCAVATION BELOW PIPES IS NOT REQUIRED.
3. EXAMPLE 3 ASSUMES THAT PRESTRESSED ADJACENT CONCRETE BOX BEAMS ATOP STUB ABUTMENTS WITH DECK SLAB POUROVER ON PILES REPLACE EXISTING TIMBER BRIDGE (35'-0" SPAN) SUPPORTED BY TIMBER SUBSTRUCTURE ON TIMBER PILES. IT IS ASSUMED THAT THE NEW VERTICAL PROFILE IS APPROXIMATELY 2'-9" HIGHER THAN THE EXISTING VERTICAL PROFILE AND ALSO THAT THE EXISTING BRIDGE IS NOT IN CENTER OF CHANNEL. SUPERSTRUCTURE NOT SHOWN FOR CLARITY.
4. EXAMPLE 4 ASSUMES THAT PRESTRESSED ADJACENT CONCRETE BOX BEAMS ATOP STUB ABUTMENTS WITH DECK SLAB POUROVER ON PILES REPLACE EXISTING 20'-0" WIDE STEEL PLATE ARCH SUPPORTED BY CONCRETE FOOTERS. IT IS ASSUMED THAT CANTILEVER WINGWALLS ARE REQUIRED. SUPERSTRUCTURE NOT SHOWN FOR CLARITY.
5. EXAMPLE 5 ASSUMES THAT WINGWALLS FOR A CONCRETE RIGID FRAME REPLACE SMALLER EXISTING CONCRETE RIGID FRAME WINGWALLS. ASSUME BOTH WINGWALLS ARE FLARED AT 45 DEGREES.
6. FOR MORE INFORMATION ON DETERMINING THE APPROPRIATE TYPE OF SUBFOUNDATION MATERIAL(S), REFER TO ENGINEERING INSTRUCTIONS 16-001 - 'GUIDANCE FOR EXCAVATION OF UNSUITABLE MATERIALS'.
7. POTENTIAL EXCAVATION FOR PLACEMENT OF SCOUR COUNTERMEASURES NOT SHOWN IN EXAMPLE 2. EXCAVATION FOR SCOUR COUNTERMEASURES WILL BE PAID FOR UNDER RESPECTIVE SCOUR COUNTERMEASURE ITEM(S). REFER TO DETAILS 350.01, 355.01, AND 360.01 FOR ADDITIONAL INFORMATION ON PLACEMENT OF SCOUR COUNTERMEASURES.
8. ALL EXISTING PIPES SHOWN IN THIS DETAIL ARE ASSUMED TO BE PIPES CLASSIFIED AS A BRIDGE. REMOVAL FOR ALL PIPES NOT CLASSIFIED AS BRIDGES WILL BE PER DELDOT STANDARD SPECIFICATIONS.
9. FOR ADDITIONAL INFORMATION, REFER TO SECTIONS 202, 203, 207, AND 211 OF THE DELDOT STANDARD SPECIFICATIONS.
10. EXCAVATION AND BACKFILL PAY LIMITS SHOULD BE SHOWN ON PLANS AND INCLUDED IN QUANTITY CALCULATIONS REPORT.
11. IF THE TOTAL QUANTITY FOR 203000 - CHANNEL EXCAVATION IS CALCULATED TO BE LESS THAN 20 CUBIC YARDS, THE DESIGNER MAY INCLUDE THE SMALL QUANTITY UNDER 207000 IN LIEU OF USING 203000 AND MUST MAKE A NOTE OF THIS IN THE PLANS AND QUANTITY CALCULATIONS.

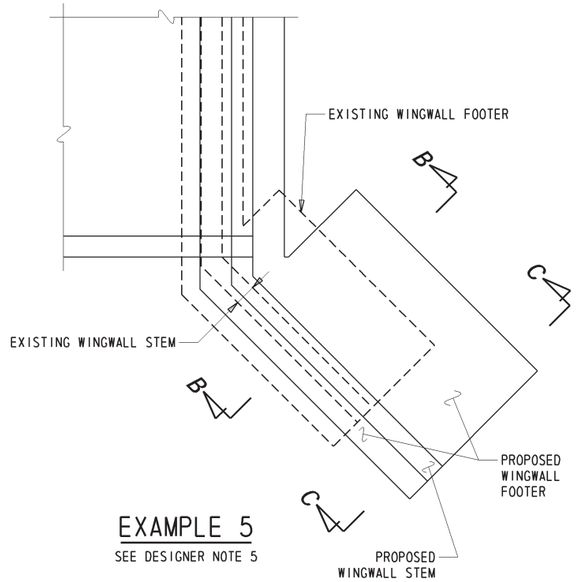

EXAMPLE 5

SEE DESIGNER NOTE 5

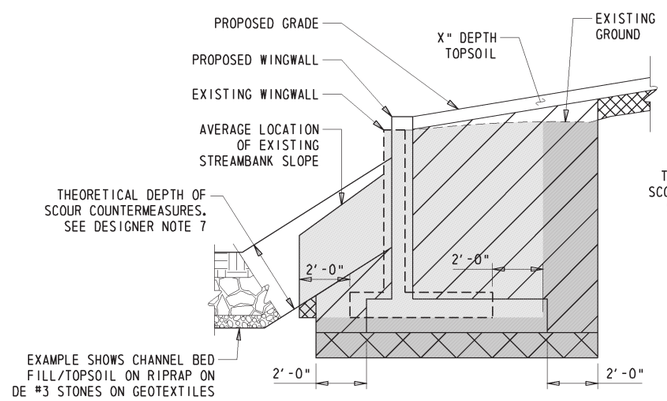

SECTION B-B

SEE DESIGNER NOTE 5

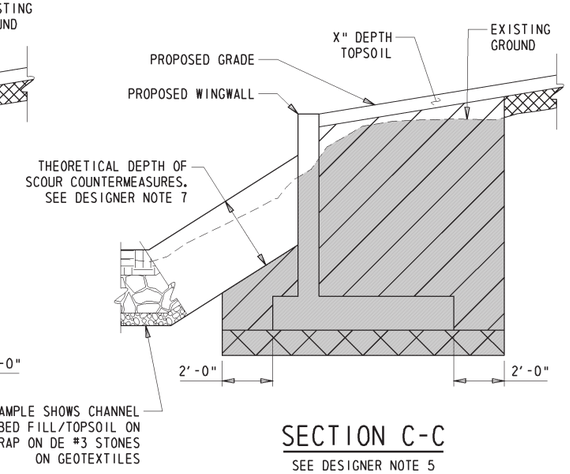

SECTION C-C

SEE DESIGNER NOTE 5

- = 211000 - REMOVAL OF STRUCTURES AND OBSTRUCTIONS
- = 207000 - STRUCTURAL EXCAVATION
- = 202000 - EXCAVATION AND EMBANKMENT
- = 203000 - CHANNEL EXCAVATION (SEE DESIGNER NOTE 11)
- = 207020 - STRUCTURAL BACKFILL (BORROW TYPE B) or 207021 - STRUCTURAL BACKFILL (BORROW TYPE C) or 208000 - FLOWABLE FILL (pipes only)
- = SUBFOUNDATION MATERIAL DETERMINED BY DESIGN (SEE DESIGNER NOTE 6)
- = 209XXX - BORROW TYPE (A, B, C, OR F) DETERMINED BY DESIGN

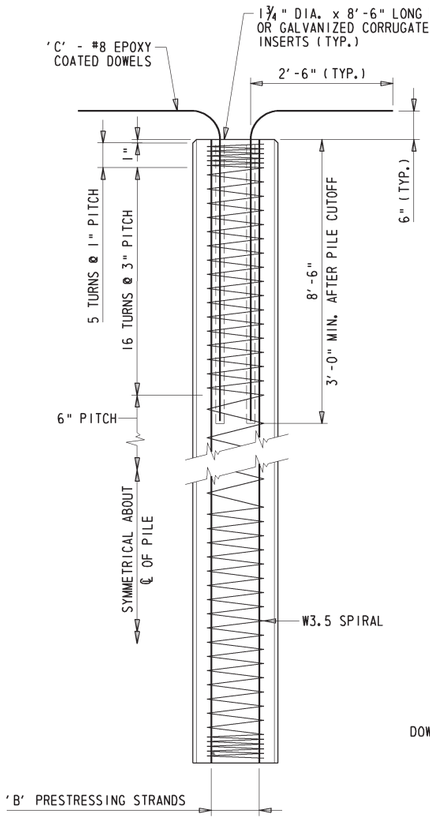

PILE ELEVATION

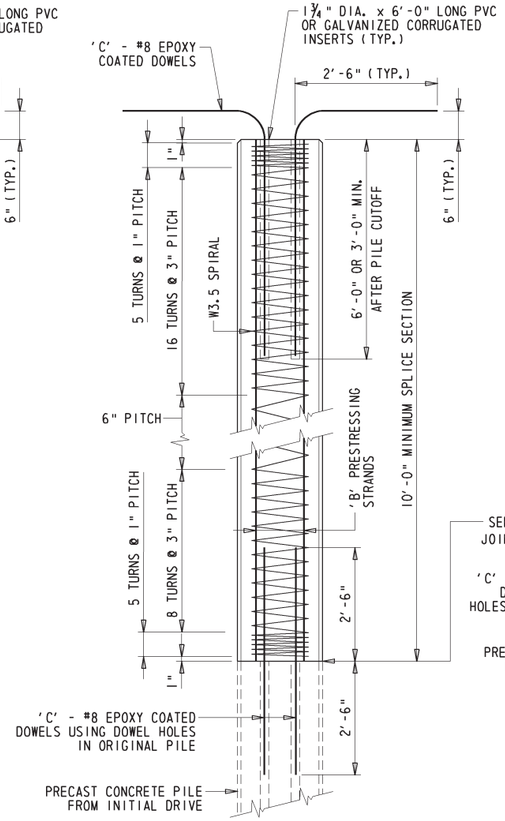

PILE BUILD-UP FOR DRIVING (PRECAST)

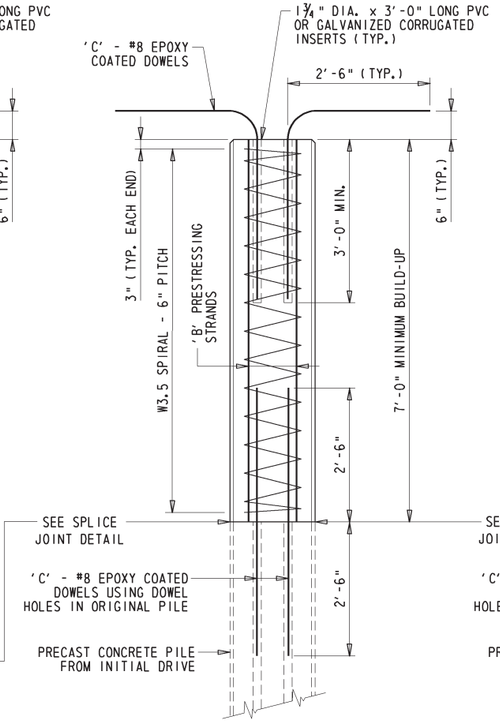

PILE BUILD-UP WITHOUT DRIVING (PRECAST)

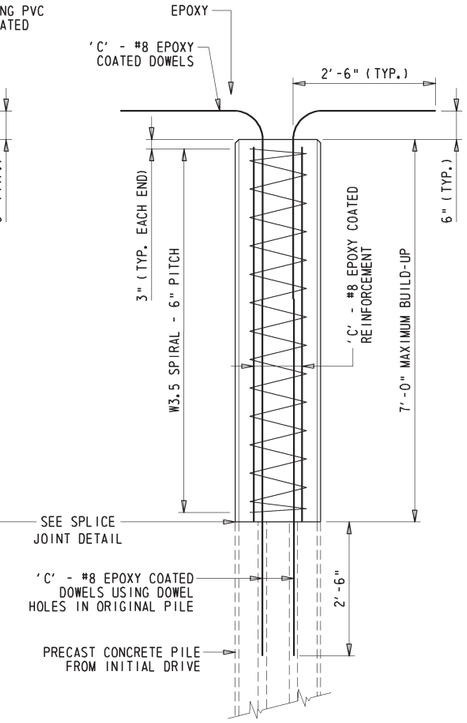

PILE BUILD-UP WITHOUT DRIVING (CAST-IN-PLACE)

PRECAST PRESTRESSED CONCRETE PILE SIZES		
PILE SIZE 'A'	STRANDS 'B'	DOWELS 'C'
12"	6	4
14"	8	4
16"	10	6
18"	12	8
20"	16	8
24"	24	12

PROJECT SPECIFIC PILE NOTES

1. PILE TYPE:
   THIS PROJECT SHALL UTILIZE __" x __" PRESTRESSED-PRECAST CONCRETE PILES.
2. ESTIMATED PRODUCTION PILE LENGTH IS ___'.
3. REQUIRED TEST PILE LENGTH IS __' LONGER THAN THE ESTIMATED PRODUCTION PILE LENGTH.
4. PILES SHALL BE DRIVEN TO A BEARING RESISTANCE OF ___ KIPS USING A RESISTANCE FACTOR OF ____.
5. MINIMUM TIP ELEVATION SHALL NOT BE REQUIRED FOR THIS PROJECT or REFER TO THE PILE INSTALLATION DATA TABLE FOR MINIMUM TIP ELEVATION.

GENERAL PILE NOTES

1. FOR MORE INFORMATION REGARDING PILE DRIVING, INSTALLATION, MATERIALS, AND FABRICATION, REFER TO SECTION 605 - DRIVEN PILES OF THE STANDARD SPECIFICATIONS.
2. EACH TEST PILE SHALL BE DYNAMICALLY TESTED BY THE CONTRACTOR IN ACCORDANCE WITH ITEM #605201 - DYNAMIC PILE TESTING BY CONTRACTOR. THE QUANTITY FOR DYNAMIC PILE TESTING SHALL INCLUDE ONE FOR THE INITIAL DRIVE AND ONE FOR THE RE-STRIKE OF EACH TEST PILE. THE NEED TO RESTRIKE EITHER A TEST PILE OR A PRODUCTION PILE SHALL BE THE SOLE DECISION OF THE ENGINEER.
3. WAVE EQUATION ANALYSIS SHALL BE SUBMITTED BY THE CONTRACTOR FOR REVIEW BY THE ENGINEER (ELECTRONIC PREFERRED, OTHERWISE 8 COPIES MINIMUM).
4. (A) TEST PILES SHALL BE DRIVEN AT EACH LOCATION SHOWN ON THE PLANS. PRODUCTION PILES SHALL BE ORDERED BASED ON THE RESULTS OF THE TEST PILE DRIVING.

   or

   (B) ALL PILES SHALL BE ORDERED THE SAME LENGTH (i.e. WITHOUT A LONGER TEST PILE). TEST PILES, AS NOTED, SHALL BE DRIVEN FIRST TO ESTABLISH DRIVING CRITERIA FOR THE OTHER PILES IN EACH SUBSTRUCTURE ELEMENT. AN ADDITIONAL __' HAS BEEN ADDED TO THE DESIGN LENGTH OF EACH PILE AS A CONTINGENCY.

PRESTRESSED-PRECAST CONCRETE PILE NOTES

1. DOWEL HOLES CAST IN THE TOP OF THE PILES SHALL BE CLEANED BY INSERTING A HIGH PRESSURE AIR HOSE TO THE BOTTOM AND BLOWING THE HOLE CLEAN FROM THE BOTTOM UPWARD PRIOR TO SETTING AND GROUTING THE DOWEL BARS. DOWELS SHALL BE SET WITH AN APPROVED NON-SHRINK EPOXY GROUT.
2. IF, AFTER A PILE CUTOFF, THE PREFORMED HOLES IN THE TOP OF PRESTRESSED-PRECAST CONCRETE PILES ARE NOT LONG ENOUGH TO PROVIDE SUFFICIENT DOWEL EMBEDMENT, THEY SHALL BE DRILLED TO THE PROPER DEPTH AT NO ADDITIONAL COST TO THE DEPARTMENT. THE MINIMUM LENGTH OF THE DOWEL BAR EMBEDMENT IN THE HOLE SHALL BE 3'-0" FEET.
3. EPOXY GROUT FOR GROUTING THE DOWEL BARS IN THE TOP OF THE PRESTRESSED-PRECAST CONCRETE PILE SHALL BE AN APPROVED NON-SHRINK EPOXY GROUT SPECIFICALLY DESIGNED AS A FAST SETTING COMPOUND THAT POURS EASILY TO FILL THE VOIDS. THE COST OF GROUTING THE DOWEL BARS SHALL BE INCIDENTAL TO THE UNIT BID ITEM FOR THAT RESPECTIVE PILE.
4. THE WORKING DRAWINGS SHALL ALSO INCLUDE DESIGN AND DETAILS OF THE PROPOSED PICK-UP AND SUPPORT POINTS, AND LIFTING LOOPS FOR THE DEPARTMENT'S APPROVAL.
5. THE CONTRACTOR MAY CONSIDER USING ALTERNATIVE PILE BUILD-UP DETAILS FOR BOTH DRIVING AND WITHOUT DRIVING. ALL ALTERNATIVE DETAILS FOR PILE BUILD-UPS SHALL BE SUBMITTED TO THE DEPARTMENT FOR APPROVAL.
6. THE CONTRACTOR MAY CONSIDER USING ALTERNATIVE SPLICE JOINT DETAIL. ALL ALTERNATIVE DETAILS FOR SPLICE JOINT SHALL BE SUBMITTED TO THE DEPARTMENT FOR APPROVAL.

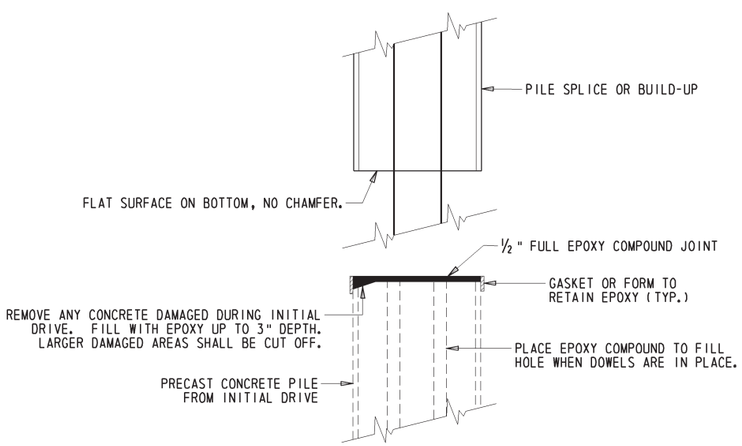

SPLICE JOINT DETAIL

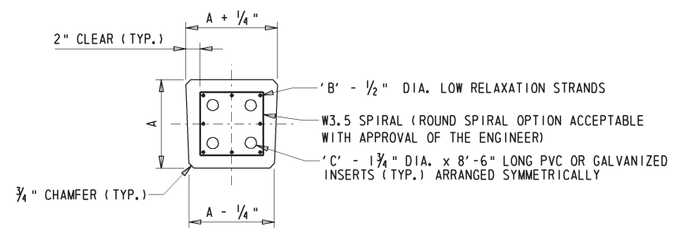

TYPICAL PRECAST PILE SECTION

PILE INSTALLATION DATA					
SUBSTRUCTURE UNIT	DESIGN DATA		ACTUAL FIELD DATA		
	MINIMUM TIP ELEVATION	ESTIMATED PILE TIP ELEVATION	ACTUAL MINIMUM TIP ELEVATION	ACTUAL AVERAGE TIP ELEVATION	ACTUAL MAXIMUM TIP ELEVATION

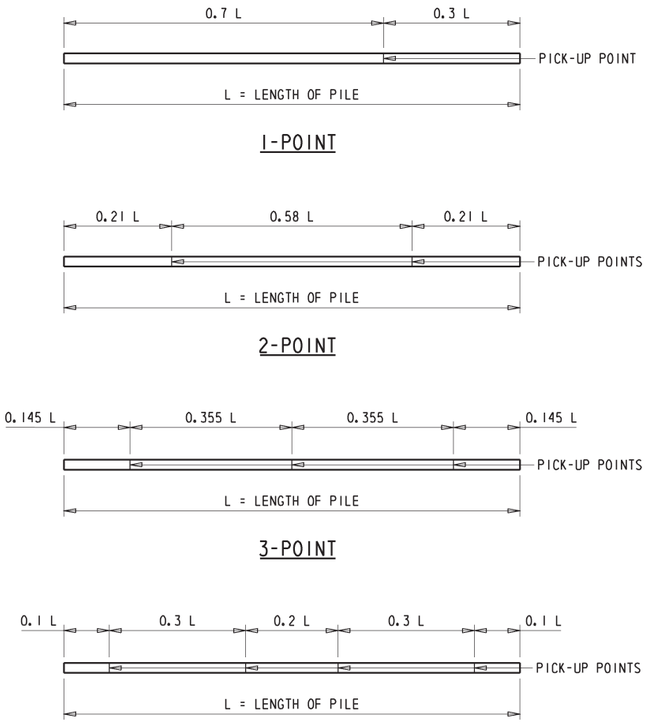

PICK-UP DIAGRAMS

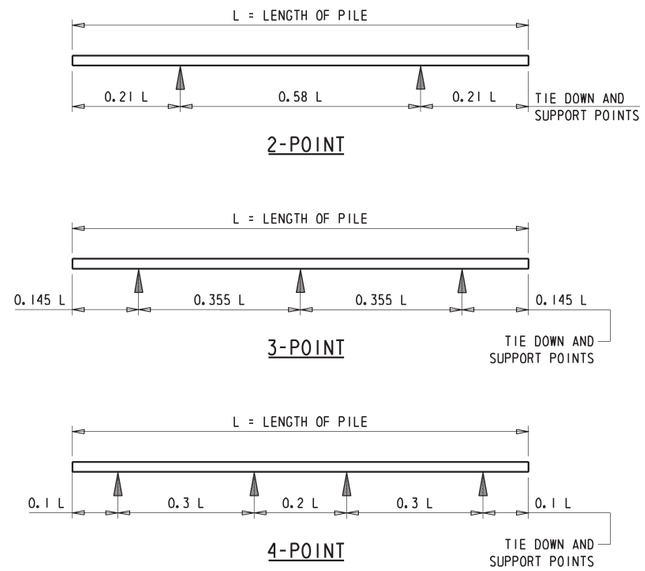

SUPPORT DIAGRAMS FOR STORAGE AND TRANSPORTATION

MAXIMUM PILE PICK-UP AND SUPPORT LENGTHS

PICK-UP METHOD	PILE SIZE 12"	PILE SIZE 14"	PILE SIZE 16"	PILE SIZE 18"	PILE SIZE 20"	PILE SIZE 24"	REQUIRED SUPPORT METHOD
1-POINT	62'	67'	70'	73'	79'	88'	2, 3, OR 4-POINT
2-POINT	88'	94'	99'	103'	112'	125'	2, 3, OR 4-POINT
3-POINT	126'	135'	142'	148'	160'	179'	3 OR 4-POINT
4-POINT	177'	189'	199'	207'	225'	250'	4-POINT

NOTE:
1. THE PICK-UP DIAGRAMS, SUPPORT DIAGRAMS FOR STORAGE AND TRANSPORTATION, AND THE 'MAXIMUM PILE PICK-UP AND SUPPORT LENGTHS' TABLE ARE FOR INFORMATION PURPOSES ONLY AND SHOULD NOT BE INCLUDED ON THE PLAN SET.
2. THE 'MAXIMUM PILE PICK-UP AND SUPPORT LENGTHS' TABLE IS BASED ON THE COMPRESSIVE STRENGTH (f'ci) AT THE TIME OF INITIAL RELEASE AT 4800 psi.
3. THE DESIGNER MUST CONSIDER THE POSSIBILITY THAT THE CONTRACTOR WILL POSITION PILE INTO PLACE FOR DRIVING USING THE ONE-POINT PICK-UP METHOD. THEREFORE IT IS RECOMMENDED THAT THE PILE LENGTH BE LIMITED TO THE MAXIMUM LENGTH FOR THE ONE-POINT PICK-UP METHOD.

DESIGNER NOTES

1. 'PROJECT SPECIFIC PILE NOTES', 'GENERAL PILE NOTES', AND 'PRESTRESSED-PRECAST CONCRETE PILE NOTES' ARE REQUIRED TO BE SHOWN ON THE PLAN SETS.
2. UNDER 'PROJECT SPECIFIC PILE NOTES', NOTE 2, THE ESTIMATED PRODUCTION PILE LENGTH SHOULD BE EQUAL TO THE ESTIMATED DESIGN PILE LENGTH IF 'GENERAL PILE NOTES', NOTE 4(A) IS USED. IF 'GENERAL PILE NOTES', NOTE 4(B) IS USED, THEN THE ESTIMATED PRODUCTION PILE LENGTH SHOULD BE EQUAL TO THE ESTIMATED DESIGN PILE LENGTH + 5'-0".
3. UNDER 'PROJECT SPECIFIC PILE NOTES', NOTE 3, THE REQUIRED TEST PILE LENGTH SHOULD BE 10'-0" LONGER THAN THE ESTIMATED PRODUCTION PILE LENGTH IF 'GENERAL PILE NOTES', NOTE 4(A) IS USED. IF 'GENERAL PILE NOTES', NOTE 4(B) IS USED, THEN THE REQUIRED TEST PILE LENGTH SHOULD BE EQUAL TO THE ESTIMATED PRODUCTION PILE LENGTH + 5'-0".
4. UNDER 'GENERAL NOTES', NOTE 4, THE DESIGNER MUST CHOOSE BETWEEN 4(A) AND 4(B) (AND DELETE THE NOTE CONTAINING THE METHOD NOT USED FOR THE PROJECT). METHOD 4(A) SHOULD BE USED IF THERE IS SUFFICIENT TIME FOR THE CONTRACTOR TO ORDER PRODUCTION PILES BASED ON TEST PILE RESULTS. THIS TYPICALLY APPLIES ONLY TO LARGER-SIZED PROJECTS OR WHEN PILE DRIVING IS NOT THE CRITICAL PATH. METHOD 4(B) IS MORE COMMON DUE TO TIME CONSTRAINTS IN THE CONSTRUCTION SCHEDULE AND THEREFORE IS USED FOR MAJORITY OF DELDOT PROJECTS.
5. AS PER SECTION 612 - PRECAST CONCRETE OF THE STANDARD SPECIFICATIONS, UNLESS OTHERWISE NOTED ON THE PLANS, THE 28-DAY COMPRESSIVE STRENGTH (f'c) OF THE PRESTRESSED-PRECAST CONCRETE PILE IS ASSUMED TO BE 6000 psi WITH A COMPRESSIVE STRENGTH (f'ci) AT THE TIME OF INITIAL RELEASE AT 4800 psi.
6. THE 'PILE INSTALLATION DATA' TABLE SHOULD BE USED FOR ALL PROJECTS. IF MINIMUM TIP ELEVATION IS NOT REQUIRED FOR THE PROJECT, THE DESIGNER SHOULD SIMPLY PLACE 'N/A' UNDER THE 'MINIMUM TIP ELEVATION' COLUMN. THE 'ACTUAL FIELD DATA' INFORMATION SHOULD BE FILLED OUT BY THE FIELD INSPECTOR AND INCLUDED IN THE AS-BUILT DRAWINGS.
7. THE DESIGNER MUST EVALUATE THE STRUCTURAL CAPACITY OF THE PILE FOR ANTICIPATED DRIVING CONDITIONS AND WHEN STRENGTH I LOADS ARE APPLIED TO THE PILES AS PART OF PILE SIZING SELECTION.
8. THE PILE BUILD-UP AND SPLICE JOINT DETAILS AS SHOWN ON SHEET 1 ARE RECOMMENDED. THE CONTRACTOR SHOULD BE ENCOURAGED TO SUBMIT ALTERNATIVE DETAILS IF SUCH DETAILS REDUCES CONSTRUCTION TIME AND/OR THE TOTAL CONSTRUCTION COSTS.
9. THE DESIGNER MUST DETERMINE WHETHER THE PILE BE CLASSIFIED AS 'FREE HEAD' OR 'FIXED HEAD'.
   (a) STANDARD DELDOT PRACTICE REQUIRES THE TOP OF PILE TO PROJECT A MINIMUM OF 12" INTO THE PILE CAP AFTER ALL DAMAGED MATERIAL HAS BEEN REMOVED WHILE MEETING REQUIRED QUANTITY OF DOWELS 'C' IN THE TABLE PROVIDED ON SHEET 1. PILES MEETING THESE MINIMUM REQUIREMENTS WILL BE CONSIDERED AS 'FREE HEAD'.
   (b) FOR A PILE TO BE CLASSIFIED AS 'FIXED HEAD', THE PILE MUST MEET ALL THE REQUIREMENTS AS SPECIFIED IN 9(a) WITH EXCEPTION THAT TOP OF PILE MUST PROJECT INTO THE PILE CAP A MINIMUM OF 2*PILE DIA. AFTER ALL DAMAGED MATERIAL HAVE BEEN REMOVED.
10. FOR PILE BENTS, THE DESIGNER MUST DETERMINE THE POINT OF FIXITY AS PER A10.7.3.13.2 AND SECTION 107.5.4. FURTHERMORE, THE DESIGNER MUST CONSIDER THE SLENDERNESS RATIO WHEN SELECTING THE PILE SIZE FOR BOTH PRODUCTION AND TEST PILES.
11. REFER TO SECTION 107.3.4.1 FOR MORE INFORMATION ON PRESTRESSED-PRECAST CONCRETE PILES.

PROJECT SPECIFIC PILE NOTES

1. PILE TYPE:
   THIS PROJECT SHALL UTILIZE __" DIA. CAST-IN-PLACE PILES, _ GAGE. THE TAPERED END SECTION SHALL BE A "_" TAPER (____" IN/FT), 8" POINT DIAMETER x __" BUTT DIAMETER x __' LENGTH. REINFORCEMENT SHALL EXTEND INTO THE PILE THE MINIMUM OF 20'-0" OR THE STRAIGHT PORTION OF THE PILE.
2. ESTIMATED PRODUCTION PILE LENGTH IS ___'.
3. REQUIRED TEST PILE LENGTH IS __' LONGER THAN THE ESTIMATED PRODUCTION PILE LENGTH.
4. PILES SHALL BE DRIVEN TO A BEARING RESISTANCE OF ___ KIPS USING A RESISTANCE FACTOR OF ____.
5. MINIMUM TIP ELEVATION SHALL NOT BE REQUIRED FOR THIS PROJECT or REFER TO THE PILE INSTALLATION DATA TABLE FOR MINIMUM TIP ELEVATION.

GENERAL PILE NOTES

1. FOR MORE INFORMATION REGARDING PILE DRIVING, INSTALLATION, MATERIALS, AND FABRICATION, REFER TO SECTION 605 - DRIVEN PILES OF THE STANDARD SPECIFICATIONS.
2. EACH TEST PILE SHALL BE DYNAMICALLY TESTED BY THE CONTRACTOR IN ACCORDANCE WITH ITEM #605201 - DYNAMIC PILE TESTING BY CONTRACTOR. THE QUANTITY FOR DYNAMIC PILE TESTING SHALL INCLUDE ONE FOR THE INITIAL DRIVE AND ONE FOR THE RE-STRIKE OF EACH TEST PILE. THE NEED TO RESTRIKE EITHER A TEST PILE OR A PRODUCTION PILE SHALL BE THE SOLE DECISION OF THE ENGINEER.
3. WAVE EQUATION ANALYSIS SHALL BE SUBMITTED BY THE CONTRACTOR FOR REVIEW BY THE ENGINEER (ELECTRONIC PREFERRED, OTHERWISE 8 COPIES MINIMUM).
4. (A) TEST PILES SHALL BE DRIVEN AT EACH LOCATION SHOWN ON THE PLANS. PRODUCTION PILES SHALL BE ORDERED BASED ON THE RESULTS OF THE TEST PILE DRIVING.

   or

   (B) ALL PILES SHALL BE ORDERED THE SAME LENGTH (I.e. WITHOUT A LONGER TEST PILE). TEST PILES, AS NOTED, SHALL BE DRIVEN FIRST TO ESTABLISH DRIVING CRITERIA FOR THE OTHER PILES IN EACH SUBSTRUCTURE ELEMENT. AN ADDITIONAL __' HAS BEEN ADDED TO THE DESIGN LENGTH OF EACH PILE AS A CONTINGENCY.

CAST-IN-PLACE PILE NOTES

1. COST OF REINFORCING BARS INSIDE THE STEEL SHELL IS INCLUDED IN THE BID PRICE FOR THE APPROPRIATE CAST-IN-PLACE CONCRETE PILE ITEMS. REINFORCEMENT SHALL BE EPOXY COATED.
2. PILES SHALL BE COAL TAR EPOXY COATED.

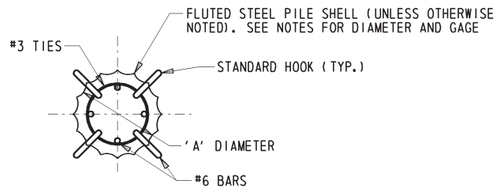

TYPICAL PILE REINFORCEMENT PLAN

CAST-IN-PLACE PILE SIZES	
PILE SIZE 'A'	DOWELS AND HOOKS 'B'
12"	3 EA.
14"	4 EA.
16"	4 EA.
18"	4 EA.

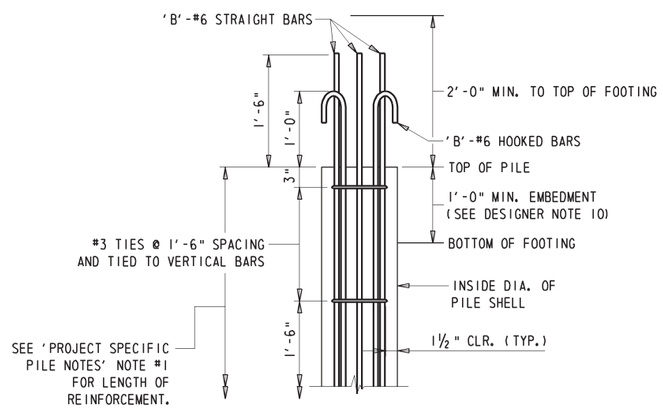

TYPICAL PILE REINFORCEMENT ELEVATION

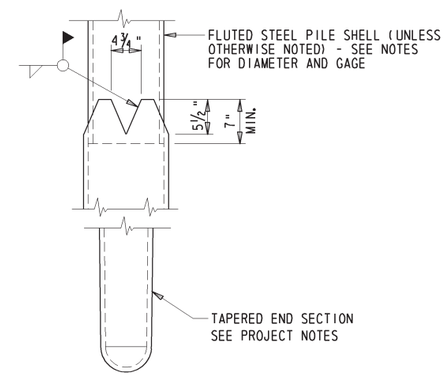

NOTE: THIS SPLICE DETAIL SHALL ALSO BE USED FOR FIELD SPLICES OF BUILD-UP SECTIONS.

TYPICAL PILE SPLICE

DESIGNER NOTES

1. 'PROJECT SPECIFIC PILE NOTES', 'GENERAL PILE NOTES', AND 'CAST-IN-PLACE PILE NOTES' ARE REQUIRED TO BE SHOWN ON THE PLAN SETS.
2. UNDER 'PROJECT SPECIFIC PILE NOTES', NOTE 1, THE DESIGNER MUST DETERMINE THE APPROPRIATE GAGE THICKNESS FOR THE PILE BASED ON ANTICIPATED DRIVING STRESSES. IF THE ULTIMATE BEARING CAPACITY IS LESS THAN 400 KIPS, 7 GAGE IS USUALLY APPROPRIATE. IF THE ULTIMATE BEARING CAPACITY IS EXPECTED TO EXCEED 400 KIPS, A MINIMUM GAGE THICKNESS OF 5 SHOULD BE USED. THE MINIMUM GAGE THICKNESS OF 7 SHALL BE USED IN ALL CASES. HOWEVER, IN SOME CASES DUE TO DRIVABILITY REASONS OR IN EXTREMELY CORROSIVE CONDITIONS, USE OF 3 GAGE MAY BE REQUIRED.
3. UNDER 'PROJECT SPECIFIC PILE NOTES', NOTE 1, THE DESIGNER MUST DETERMINE THE POINT OF FIXITY OF THE PILE AS PER A10.7.3.13.4 AND SECTION 107.5.4. IF THE DISTANCE FROM TOP OF THE PILE TO THE POINT OF FIXITY + 3'-0" IS LESS THAN 20'-0" (OR STRAIGHT PORTION OF THE PILE IF LESS THAN 20'-0"), THEN A MINIMUM OF 20'-0" (OR STRAIGHT PORTION OF THE PILE IF LESS THAN 20'-0") SHALL BE REQUIRED. IF THE POINT OF FIXITY + 3'-0" IS GREATER THAN 20'-0", THEN NOTE 1 SHALL BE REVISED ACCORDINGLY TO REFLECT THE ADDITIONAL LENGTH FOR REINFORCEMENT REQUIRED TO BE EXTENDED INTO THE PILE.
4. UNDER 'PROJECT SPECIFIC PILE NOTES', NOTE 2, THE ESTIMATED PRODUCTION PILE LENGTH SHOULD BE EQUAL TO THE ESTIMATED DESIGN PILE LENGTH IF 'GENERAL PILE NOTES', NOTE 4(A) IS USED. IF 'GENERAL PILE NOTES', NOTE 4(B) IS USED, THEN THE ESTIMATED PRODUCTION PILE LENGTH SHOULD BE EQUAL TO DESIGN PILE LENGTH + 5'-0".
5. UNDER 'PROJECT SPECIFIC PILE NOTES', NOTE 3, THE REQUIRED TEST PILE LENGTH SHOULD BE 10'-0" LONGER THAN THE ESTIMATED PRODUCTION PILE LENGTH IF 'GENERAL PILE NOTES', NOTE 4(A) IS USED. IF 'GENERAL PILE NOTES', NOTE 4(B) IS USED, THEN THE REQUIRED TEST PILE LENGTH SHOULD BE EQUAL TO THE ESTIMATED PRODUCTION PILE LENGTH + 5'-0".
6. UNDER 'GENERAL NOTES', NOTE 4, THE DESIGNER MUST CHOOSE BETWEEN 4(A) AND 4(B) (AND DELETE THE NOTE CONTAINING THE METHOD NOT USED FOR THE PROJECT). METHOD 4(A) SHOULD BE USED IF THERE IS SUFFICIENT TIME FOR THE CONTRACTOR TO ORDER PRODUCTION PILES BASED ON TEST PILE RESULTS. THIS TYPICALLY APPLIES ONLY TO LARGER-SIZED PROJECTS OR WHEN PILE DRIVING IS NOT THE CRITICAL PATH. METHOD 4(B) IS MORE COMMON DUE TO TIME CONSTRAINTS IN THE CONSTRUCTION SCHEDULE AND THEREFORE IS USED FOR MAJORITY OF DELDOT PROJECTS.
7. UNDER 'CAST-IN-PLACE PILE NOTES', NOTE 2, THE DESIGNER MAY CONSIDER WAIVING REQUIREMENTS OF APPLYING COATING TO THE PILE IF EVIDENCE SUPPORTS THAT THE SOIL IS NON-CORROSIVE AND IS NOT LOCATED IN MARINE ENVIRONMENT. IF NO COATING IS REQUIRED, THIS NOTE MAY BE DELETED.
8. THE 'PILE INSTALLATION DATA' TABLE SHOULD BE USED FOR ALL PROJECTS. IF MINIMUM TIP ELEVATION IS NOT REQUIRED FOR THE PROJECT, THE DESIGNER SHOULD SIMPLY PLACE 'N/A' UNDER THE 'MINIMUM TIP ELEVATION' COLUMN. THE 'ACTUAL FIELD DATA' INFORMATION SHOULD BE FILLED OUT BY THE FIELD INSPECTOR AND INCLUDED IN THE AS-BUILT DRAWINGS.
9. THE DESIGNER MUST EVALUATE THE STRUCTURAL CAPACITY OF THE PILE FOR ANTICIPATED DRIVING CONDITIONS AND WHEN STRENGTH I LOADS ARE APPLIED TO THE PILES AS PART OF PILE SIZING SELECTION.
10. THE DESIGNER MUST DETERMINE WHETHER THE PILE BE CLASSIFIED AS 'FREE HEAD' OR 'FIXED HEAD'.
    (a) STANDARD DELDOT PRACTICE REQUIRES THE TOP OF PILE TO PROJECT A MINIMUM OF 12" INTO THE PILE CAP AFTER ALL DAMAGED MATERIAL HAS BEEN REMOVED WHILE MEETING REQUIRED QUANTITY OF DOWELS AND HOOKS 'B' IN THE TABLE PROVIDED ON THIS SHEET. PILES MEETING THESE MINIMUM REQUIREMENTS WILL BE CONSIDERED AS 'FREE HEAD'.
    (b) FOR A PILE TO BE CLASSIFIED AS 'FIXED HEAD', THE PILE MUST MEET ALL THE REQUIREMENTS AS SPECIFIED IN 10(a) WITH EXCEPTION THAT TOP OF PILE MUST PROJECT INTO THE PILE CAP A MINIMUM OF 2*PILE DIA. AFTER ALL DAMAGED MATERIAL HAVE BEEN REMOVED.
11. REFER TO SECTION 107.3.4.3 FOR MORE INFORMATION ON CAST-IN-PLACE PILES.
12. FOR PILE BENTS, THE DESIGNER MUST DETERMINE THE POINT OF FIXITY AS PER A10.7.3.13 AND SECTION 107.5.4. FURTHERMORE, THE DESIGNER MUST CONSIDER THE SLENDERNESS RATIO WHEN SELECTING THE PILE SIZE FOR BOTH PRODUCTION AND TEST PILES.
13. SINCE FLUTED STEEL PILES ARE PROPRIETARY, THE DESIGNER MUST INCLUDE ALTERNATIVE PILE TYPE ON THE PLANS OR THE CONTRACT DOCUMENT.

CAST-IN-PLACE PILE DETAILS

PILE INSTALLATION DATA					
SUBSTRUCTURE UNIT	DESIGN DATA		ACTUAL FIELD DATA		
	MINIMUM TIP ELEVATION	ESTIMATED PILE TIP ELEVATION	ACTUAL MINIMUM TIP ELEVATION	ACTUAL AVERAGE TIP ELEVATION	ACTUAL MAXIMUM TIP ELEVATION

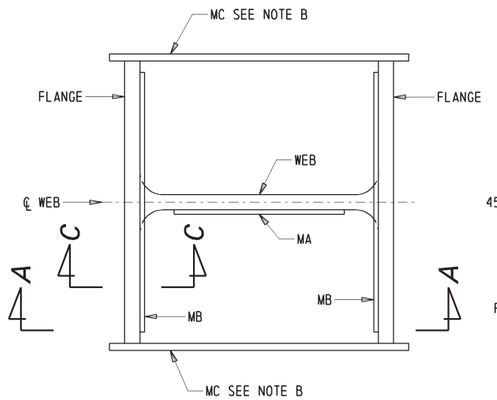

PLAN

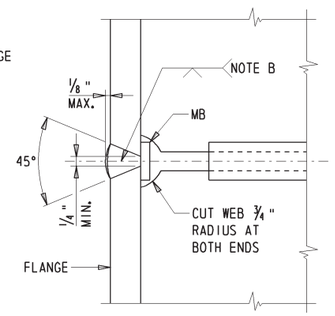

SECTION C-C
ALTERNATE FLANGE WELD

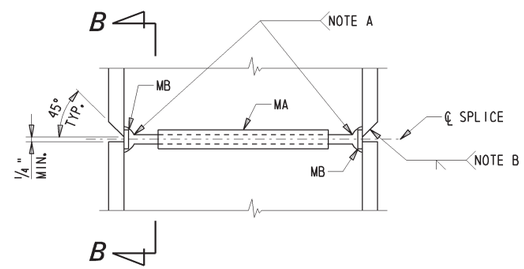

SECTION A-A

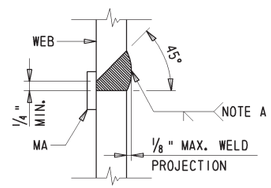

SECTION B-B

SPLICE MATERIAL REQUIREMENTS		
HP 10"	HP 12"	HP 14"
1 BAR MA 1" x 3/16" x 7 1/4"	1 BAR MA 1" x 3/16" x 9 3/8"	1 BAR MA 1" x 3/16" x 1'-0""
2 BARS MB 1" x 3/16" x 10"	2 BARS MB 1" x 3/16" x 1'-0"	2 BARS MB 1" x 3/16" x 1'-2 1/2"
2 BARS MC 3" x 3/8" x 11"	2 BARS MC 3" x 3/8" x 1'-1"	2 BARS MC 3" x 3/8" x 1'-3"

NOTE A: END OF WELD SHALL BE SMOOTH AND FLUSH WITH WEB CUT, 1/4" MIN. EFFECTIVE THROAT.
NOTE B: BAR MC SHALL BE TACK WELDED TO FLANGE AT SPLICE TO BACK UP END OF FLANGE WELD, REMOVE MC AFTER WELD IS COMPLETED. END OF WELD MUST BE SMOOTH AND FLUSH WITH EDGE OF FLANGE. GRIND WELD SMOOTH WITH EDGE OF FLANGE IF PILE IS UNSUPPORTED IN WELD AREA SUCH AS: IN AIR, WATER, OR SOFT MUD, 1/4" MIN. EFFECTIVE THROAT.
NOTE C: LET WELDS COOL TO AIR TEMPERATURE BEFORE RESUMING THE PILE DRIVING.
NOTE D: NO PILE SPLICING SHALL BE ALLOWED ON ANY PORTION OF PILE THAT IS TO REMAIN EXPOSED OR TO BE ABOVE FINISHED GROUNDLINE IN COMPLETED STRUCTURE.
NOTE E: ALL SPLICE MATERIALS SHALL BE ASTM A709, GRADE 50.

STEEL H-PILE SPLICE DETAILS

PILE INSTALLATION DATA					
SUBSTRUCTURE UNIT	DESIGN DATA		ACTUAL FIELD DATA		
	MINIMUM TIP ELEVATION	ESTIMATED PILE TIP ELEVATION	ACTUAL MINIMUM TIP ELEVATION	ACTUAL AVERAGE TIP ELEVATION	ACTUAL MAXIMUM TIP ELEVATION

TYPICAL H-PILE SIZES	
SECTION	WEIGHT (LB/FT)
HP 8"	36
HP 10"	42
	57
HP 12"	53
	63
	74
	84
	89
	102
	117
HP 14"	73
	89
	102
	117
HP 16"	88
	101
	121
	141
	162
	183
HP 18"	135
	157
	181
	204

PROJECT SPECIFIC PILE NOTES

1. PILE TYPE:
   THIS PROJECT SHALL UTILIZE HP__X___ PILES CONFORMING TO ASTM A709, GRADE 50.
2. ESTIMATED PRODUCTION PILE LENGTH IS ___'.
3. REQUIRED TEST PILE LENGTH IS __' LONGER THAN THE ESTIMATED PRODUCTION PILE LENGTH.
4. PILES SHALL BE DRIVEN TO A BEARING RESISTANCE OF ___ KIPS USING A RESISTANCE FACTOR OF ____.
5. MINIMUM TIP ELEVATION SHALL NOT BE REQUIRED FOR THIS PROJECT or REFER TO THE PILE INSTALLATION DATA TABLE FOR MINIMUM TIP ELEVATION.

GENERAL PILE NOTES

1. FOR MORE INFORMATION REGARDING PILE DRIVING, INSTALLATION, MATERIALS, AND FABRICATION, REFER TO SECTION 605 - DRIVEN PILES OF THE STANDARD SPECIFICATIONS.
2. EACH TEST PILE SHALL BE DYNAMICALLY TESTED BY THE CONTRACTOR IN ACCORDANCE WITH ITEM #605201 - DYNAMIC PILE TESTING BY CONTRACTOR. THE QUANTITY FOR DYNAMIC PILE TESTING SHALL INCLUDE ONE FOR THE INITIAL DRIVE AND ONE FOR THE RE-STRIKE OF EACH TEST PILE. THE NEED TO RESTRIKE EITHER A TEST PILE OR A PRODUCTION PILE SHALL BE THE SOLE DECISION OF THE ENGINEER.
3. WAVE EQUATION ANALYSIS SHALL BE SUBMITTED BY THE CONTRACTOR FOR REVIEW BY THE ENGINEER (ELECTRONIC PREFERRED, OTHERWISE 8 COPIES MINIMUM).
4. (A) TEST PILES SHALL BE DRIVEN AT EACH LOCATION SHOWN ON THE PLANS. PRODUCTION PILES SHALL BE ORDERED BASED ON THE RESULTS OF THE TEST PILE DRIVING.

   or

   (B) ALL PILES SHALL BE ORDERED THE SAME LENGTH (I.e. WITHOUT A LONGER TEST PILE). TEST PILES, AS NOTED, SHALL BE DRIVEN FIRST TO ESTABLISH DRIVING CRITERIA FOR THE OTHER PILES IN EACH SUBSTRUCTURE ELEMENT. AN ADDITIONAL __' HAS BEEN ADDED TO THE DESIGN LENGTH OF EACH PILE AS A CONTINGENCY.

STEEL H-PILE NOTES

1. PILES SHALL BE COAL TAR EPOXY COATED.
2. STEEL H-PILE SPLICE DETAILS APPLIES ONLY TO HP 10", HP 12", AND HP 14" PILES.
3. THE CONTRACTOR MAY CONSIDER USING ALTERNATIVE STEEL H-PILE SPLICE DETAILS. ALL ALTERNATIVE DETAILS FOR STEEL H-PILE SPLICING SHALL BE SUBMITTED TO THE DEPARTMENT FOR APPROVAL.
4. ALL PILES SHALL HAVE A HEAVY-DUTY TIP REINFORCEMENT. THE TYPE OF TIP REINFORCEMENT MUST BE APPROVED BY THE DEPARTMENT. PAYMENT SHALL BE INCIDENTAL TO THE RESPECTIVE PILE ITEM.

DESIGNER NOTES

1. 'PROJECT SPECIFIC PILE NOTES', 'GENERAL PILE NOTES', AND 'STEEL H-PILE NOTES' ARE REQUIRED TO BE SHOWN ON THE PLAN SETS.
2. UNDER 'PROJECT SPECIFIC PILE NOTES', NOTE 2, THE ESTIMATED PRODUCTION PILE LENGTH SHOULD BE EQUAL TO THE ESTIMATED DESIGN PILE LENGTH IF 'GENERAL PILE NOTES', NOTE 4(A) IS USED. IF 'GENERAL PILE NOTES', NOTE 4(B) IS USED, THEN THE ESTIMATED PRODUCTION PILE LENGTH SHOULD BE EQUAL TO THE ESTIMATED DESIGN PILE LENGTH + 5'-0".
3. UNDER 'PROJECT SPECIFIC PILE NOTES', NOTE 3, THE REQUIRED TEST PILE LENGTH SHOULD BE 10'-0" LONGER THAN THE ESTIMATED PRODUCTION PILE LENGTH IF 'GENERAL PILE NOTES', NOTE 4(A) IS USED. IF 'GENERAL PILE NOTES', NOTE 4(B) IS USED, THEN THE REQUIRED TEST PILE LENGTH SHOULD BE EQUAL TO PRODUCTION PILE LENGTH + 5'-0".
4. UNDER 'GENERAL NOTES', NOTE 4, THE DESIGNER MUST CHOOSE BETWEEN 4(A) AND 4(B) (AND DELETE THE NOTE CONTAINING THE METHOD NOT USED FOR THE PROJECT). METHOD 4(A) SHOULD BE USED IF THERE IS SUFFICIENT TIME FOR THE CONTRACTOR TO ORDER PRODUCTION PILES BASED ON TEST PILE RESULTS. THIS TYPICALLY APPLIES ONLY TO LARGER-SIZED PROJECTS OR WHEN PILE DRIVING IS NOT THE CRITICAL PATH. METHOD 4(B) IS MORE COMMON DUE TO TIME CONSTRAINTS IN THE CONSTRUCTION SCHEDULE AND THEREFORE IS USED FOR MAJORITY OF DELDOT PROJECTS.
5. UNDER 'STEEL H-PILE NOTES', NOTE 1, THE DESIGNER MAY CONSIDER WAIVING REQUIREMENTS OF APPLYING COATING TO THE PILE IF EVIDENCE SUPPORTS THAT THE SOIL IS NON-CORROSIVE AND IS NOT LOCATED IN MARINE ENVIRONMENT. IF NO COATING IS REQUIRED, THIS NOTE MAY BE DELETED.
6. UNDER 'STEEL H-PILE NOTES', NOTE 3, AND THE STEEL H-PILE SPLICE DETAILS; IT SHOULD BE CLEAR THAT WHILE SUCH DETAILS ARE RECOMMENDED AND 'PRE-APPROVED', THE CONTRACTOR SHOULD BE ENCOURAGED TO USE OTHER ALTERNATIVE SPLICE DETAILS THAT REDUCES CONSTRUCTION TIME AND/OR THE TOTAL CONSTRUCTION COSTS.
7. UNDER 'STEEL H-PILE NOTES', NOTE 4, THIS NOTE IS ONLY NECESSARY IF THE PILE TIP IS EXPECTED TO COME IN CONTACT WITH BOULDERS AND/OR WILL BE DRIVEN INTO THE BEDROCK. OTHERWISE, DELETE THE NOTE.
8. THE 'PILE INSTALLATION DATA' TABLE SHOULD BE USED FOR ALL PROJECTS. IF MINIMUM TIP ELEVATION IS NOT REQUIRED FOR THE PROJECT, THE DESIGNER SHOULD SIMPLY PLACE 'N/A' UNDER THE 'MINIMUM TIP ELEVATION' COLUMN. THE 'ACTUAL FIELD DATA' INFORMATION SHOULD BE FILLED OUT BY THE FIELD INSPECTOR AND INCLUDED IN THE AS-BUILT DRAWINGS.
9. THE DESIGNER MUST EVALUATE THE STRUCTURAL CAPACITY OF THE PILE FOR ANTICIPATED DRIVING CONDITIONS AND WHEN STRENGTH I LOADS ARE APPLIED TO THE PILES AS PART OF PILE SIZING SELECTION.
10. THE DESIGNER MUST DETERMINE WHETHER THE PILE BE CLASSIFIED AS 'FREE HEAD' OR 'FIXED HEAD'.
    (a) STANDARD DELDOT PRACTICE REQUIRES THE TOP OF PILE TO PROJECT A MINIMUM OF 12" INTO THE PILE CAP AFTER ALL DAMAGED MATERIAL HAS BEEN REMOVED. PILES MEETING THESE MINIMUM REQUIREMENTS WILL BE CONSIDERED AS 'FREE HEAD'.
    (b) FOR A PILE TO BE CLASSIFIED AS 'FIXED HEAD', THE PILE MUST MEET ALL THE REQUIREMENTS AS SPECIFIED IN 10(a) WITH EXCEPTION THAT TOP OF PILE MUST PROJECT INTO THE PILE CAP A MINIMUM OF 2*PILE DIA. AFTER ALL DAMAGED MATERIAL HAVE BEEN REMOVED.
11. FOR PILE BENTS, THE DESIGNER MUST DETERMINE THE POINT OF FIXITY AS PER A10.7.3.13.2 AND SECTION 107.5.4. FURTHERMORE, THE DESIGNER MUST CONSIDER THE SLENDERNESS RATIO WHEN SELECTING THE PILE SIZE FOR BOTH PRODUCTION AND TEST PILES.
12. REFER TO SECTION 107.3.4.4 FOR MORE INFORMATION ON STEEL H-PILES.

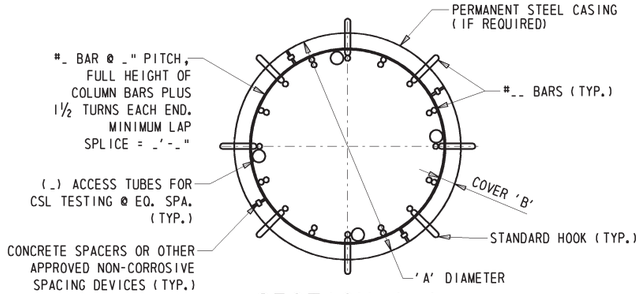

SECTION A-A

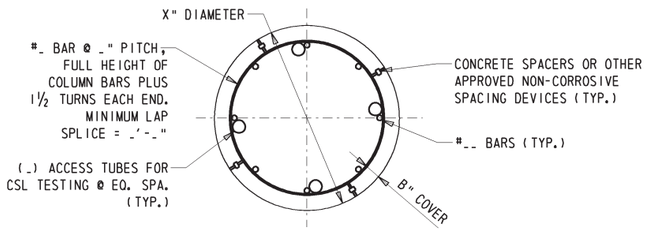

SECTION B-B

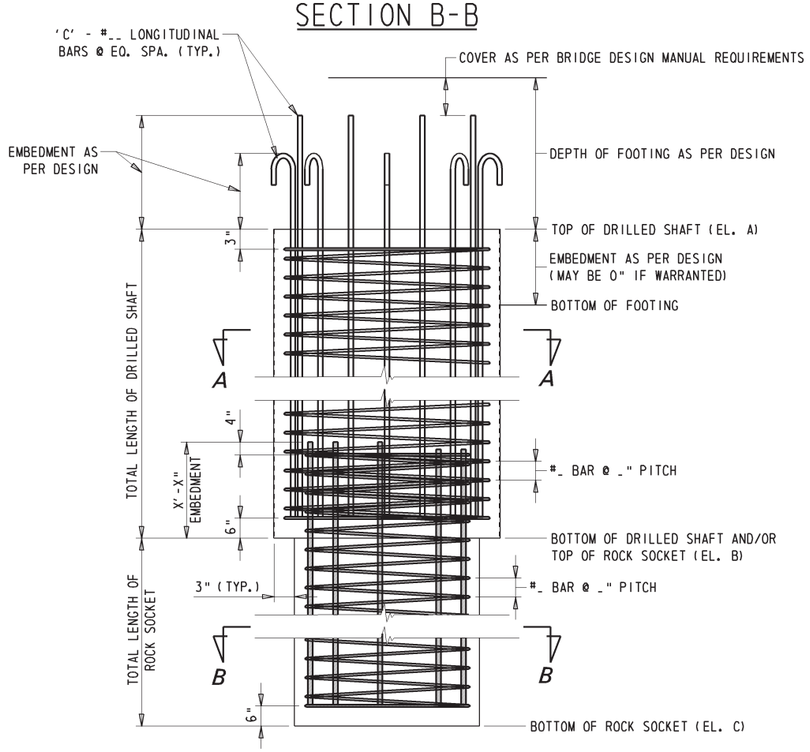

ELEVATION

NOTE: POTENTIAL BUNDLED BARS, ACCESS TUBES, AND SPACERS NOT SHOWN FOR CLARITY. ROCK SOCKET REINFORCEMENT SHADED FOR CLARITY.

DRILLED SHAFT DETAILS FOR BRIDGE STRUCTURES

DRILLED SHAFT SIZES & REQUIREMENTS		
DRILLED SHAFT SIZE 'A'	MINIMUM CONCRETE COVER 'B'	MAXIMUM LONGITUDINAL BAR LOCATIONS 'C' @ EQ. SPA.
30"	3"	15 (8 STRAIGHT & 7 HOOKED)
36"	3"	17 (9 STRAIGHT & 8 HOOKED)
42"	4"	21 (11 STRAIGHT & 10 HOOKED)
48"	4"	25 (13 STRAIGHT & 12 HOOKED)
60"	6"	30 (16 STRAIGHT & 14 HOOKED)
72"	6"	37 (19 STRAIGHT & 18 HOOKED)

NOTE:
- MINIMUM CONCRETE COVER 'B' ARE FOR LONGITUDINAL BARS. MINIMUM CONCRETE COVER FOR TRANSVERSE BARS MAY BE LESS THAN REQUIRED FOR LONGITUDINAL BARS BY NO MORE THAN 0.5".
- BARS MAY BE BUNDLED (IN MAXIMUM OF TWO'S) AS DEFINED IN LONGITUDINAL BAR LOCATIONS 'C' COLUMN.
- IF HOOKED BARS ARE BUNDLED, THE SECOND BAR WITH THE HOOKED BAR SHALL BE STRAIGHT.
- LONGITUDINAL BUNDLED BARS SHALL BE BUNDLED IN THE RADIAL DIRECTION.
- TRANSVERSE BUNDLED BARS SHALL BE BUNDLED VERTICALLY.
- BARS DENOTES AS HOOKED IN THE TABLE ABOVE AND DETAILS MAY BE SUBSTITUTED FOR STRAIGHT OR 90° BEND BARS IF JUSTIFIED THROUGH DESIGN.

DRILLED SHAFT INSTALLATION DATA					
SHAFT NO. or SUBSTRUCTURE UNIT	DESIGN DATA			ACTUAL FIELD DATA	
	EL. A	ESTIMATED EL. B	ESTIMATED EL. C	ACTUAL EL. B	ACTUAL EL. C

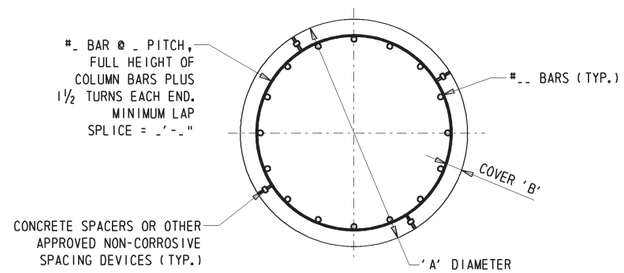

SECTION C-C

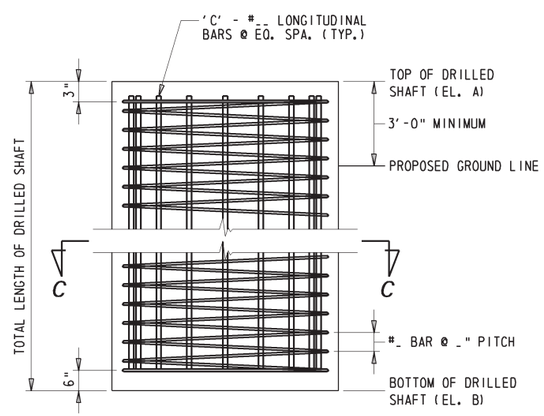

ELEVATION

NOTE: POTENTIAL BUNDLED BARS AND SPACERS NOT SHOWN FOR CLARITY.

DRILLED SHAFT DETAILS FOR SIGN STRUCTURES

PROJECT SPECIFIC NOTES

1. THIS PROJECT SHALL UTILIZE __" DIA. DRILLED SHAFTS. THE LONGITUDINAL BARS SHALL BE #__ BARS AND SHALL or SHALL NOT BE BUNDLED. THE TRANSVERSE BARS SHALL BE #_ BARS SPIRALED SPACED AT __" PITCH AND SHALL or SHALL NOT BE BUNDLED. THE MINIMUM CONCRETE COVER SHALL BE _".
2. ESTIMATED DRILLED SHAFT LENGTH IS ___'.
3. DRILLED SHAFTS ARE ESTIMATED TO HAVE A BEARING RESISTANCE OF ___ KIPS USING A RESISTANCE FACTOR OF ____.
4. DRILLED SHAFTS SHALL UTILIZE CLASS A or CLASS B CONCRETE.
5. DRILLED SHAFTS SHALL or SHALL NOT REQUIRE _" THICK PERMANENT CASING.
6. EXPLORATORY DRILLING SHALL or SHALL NOT BE REQUIRED. PAYMENT UNDER ITEM #606031.
7. TOTAL OF _ DRILLED SHAFT(s) SHALL LOAD TESTED BY THE CONTRACTOR IN ACCORDANCE WITH ITEM #606030 - LOAD TESTING OF DRILLED SHAFTS.

GENERAL DRILLED SHAFT NOTES

1. FOR MORE INFORMATION REGARDING PLACEMENT, MATERIALS, AND FABRICATON OF DRILLED SHAFTS, REFER TO SECTION 606 - DRILLED SHAFTS OF THE STANDARD SPECIFICATIONS.
2. ALL ELEVATIONS SHALL BE VERIFIED IN THE FIELD PRIOR TO FABRICATION AND CONSTRUCTION.
3. COST OF REINFORCING BARS INSIDE THE DRILLED SHAFT IS INCLUDED IN THE BID PRICE FOR THE APPROPRIATE DRILLED SHAFT ITEMS. REINFORCEMENT SHALL BE EPOXY COATED.
4. CONCRETE SPACERS OR OTHER APPROVED NON-CORROSIVE SPACING DEVICES SHALL BE INSTALLED IN ACCORDANCE WITH SUBSECTION 606.03(9) OF THE STANDARD SPECIFICATIONS.
5. ACCESS TUBES FOR CROSSHOLE SONIC LOG (CSL) TESTING SHALL BE INSTALLED IN ACCORDANCE WITH SUBSECTION 606.03(13) OF THE STANDARD SPECIFICATIONS.

DESIGNER NOTES

1. 'PROJECT SPECIFIC NOTES' AND 'GENERAL DRILLED SHAFT NOTES' ARE REQUIRED TO BE SHOWN ON THE PLAN SETS. NOTES LISTED THAT ARE NOT REQUIRED FOR THE PROJECT SHOULD BE DELETED.
2. NOTES UNDER 'PROJECT SPECIFIC NOTES' ARE GENERAL. ADDITIONAL PROJECT SPECIFIC NOTES UNIQUE TO THE PROJECT SHOULD BE ADDED AS THE CONDITIONS DICTATE.
3. UNDER 'PROJECT SPECIFIC PILE NOTES', NOTE 1, WHILE BOTH LONGITUDINAL AND TRANSVERSE REINFORCEMENT IS REQUIRED FOR THE FULL DEPTH OF THE DRILLED SHAFT IN ORDER TO MAINTAIN STABILITY OF THE REBAR CAGE DURING TRANSPORTATION AND PLACEMENT, THE DESIGNER MAY SPECIFY AN ACCEPTABLE REDUCTION IN REINFORCEMENT BEYOND THE DEPTH OF AT LEAST 3*DIAMETERS BELOW THE DEPTH OF MOMENT FIXITY. THE POINT OF MOMENT FIXITY MAY BE OBTAINED VIA THE P-Y METHOD.
4. UNDER 'PROJECT SPECIFIC PILE NOTES', NOTE 4, THE DESIGNER MUST CHOOSE BETWEEN CLASS A OR CLASS B CONCRETE. CLASS B CONCRETE IS USUALLY THE APPROPRIATE CHOICE IN MOST CASES. HOWEVER, CLASS A MAY BE A MORE ACCEPTABLE OPTION IN CASES WHERE THE DRILLED SHAFT IS VISIBLY EXPOSED AND/OR IS ACTING AS A BEAM-COLUMN.
5. UNDER 'GENERAL NOTES', NOTE 5, WHILE CSL TESTING IS REQUIRED AS PER SUBSECTION 606.03(13) IN THE STANDARD SPECIFICATIONS, IF THE CONDITIONS DICTATE, ALTERNATIVE NON-DESTRUCTIVE TESTS SUCH AS GAMMA-GAMMA, SONIC ECHO/IMPULSE, OR THERMAL INTEGRITY PROFILING MAY BE SPECIFIED ON THE PLANS TO USE ALONGSIDE CSL TESTING. REVISE THE NOTE ACCORDINGLY.
6. IN THE 'DRILLED SHAFT SIZES & REQUIREMENTS" TABLE, THE MAXIMUM LONGITUDINAL BAR LOCATIONS 'C' IS BASED ON MINIMUM LONGITUDINAL BAR SPACING OF 5" AS PER A5.13.4.5.2. HOWEVER IF TREMIE CONCRETE IS USED, THE MINIMUM SPACING MUST NOT BE LESS THAN 10 TIMES THE MAXIMUM AGGREGATE SIZE. THE DESIGNER SHOULD ATTEMPT TO USE SLIGHTLY LESS NUMBER OF LOCATIONS THAN THE MAXIMUM ALLOWABLE LOCATIONS AND TO BUNDLE BARS WHENEVER NECESSARY. HOWEVER, THERE SHOULD BE NOT LESS THAN 6 BARS AT EQUAL SPACING IN A CIRCULAR ARRANGEMENT.
7. IN THE 'DRILLED SHAFT SIZES & REQUIREMENTS" TABLE, THE MINIMUM CONCRETE COVER SPECIFIED ARE FOR UNCASED SHAFTS. IF THE SHAFT IS CASED, THE DESIGNER HAS THE OPTION TO USE REDUCED MINIMUM CONCRETE COVER AS SPECIFIED IN TABLE 205.12.3-1.
8. MINIMUM SIZE OF LONGITUDINAL BARS IS #5 AS PER A5.7.4.2. THE RECOMMENDED AREA OF REINFORCEMENT ABOVE THE MOMENT FIXITY SHOULD BE BETWEEN 1% TO 2% OF THE CROSS-SECTION OF THE DRILLED SHAFT. THE REDUCED AREA AS DESCRIBED IN DESIGNER NOTE #3 MAY BE BELOW 1%, BUT STILL MUST MEET MINIMUM REINFORCEMENT REQUIREMENTS AS PER A5.7.4.2.
9. MINIMUM SIZE OF TRANSVERSE (SPIRAL) BARS IS #3. THE MAXIMUM PITCH OF THE SPIRAL REINFORCEMENT SHALL BE 6" DOWN TO THE DEPTH OF AT LEAST 3*DIAMETERS PLUS 12" BELOW THE DEPTH OF MOMENT FIXITY. BUT IN ALL CASES, THE MINIMUM REINFORCEMENT REQUIREMENTS AS PER A5.7.4.6 MUST BE MET.
10. ALTERNATIVELY, THE DESIGNER MAY CONSIDER USE OF HOOPS IN LIEU OF SPIRAL REINFORCEMENT FOR SIGN STRUCTURE FOUNDATION.
11. THE ANCHOR BOLT AND ANCHOR PLATE DETAILS ARE OMITTED FROM THIS SHEET AT THE 'DRILLED SHAFT FOR SIGN STRUCTURES' ELEVATION VIEW. THESE DETAILS CAN BE FOUND IN SECTION 365.01 - SIGN STRUCTURES.
12. THE DRILLED SHAFT INSTALLATION DATA' TABLE SHOULD BE USED FOR ALL PROJECTS. THE 'ACTUAL FIELD DATA' INFORMATION SHOULD BE FILLED OUT BY THE FIELD INSPECTOR AND INCLUDED IN THE AS-BUILT DRAWINGS.
13. THE DESIGNER MUST EVALUATE THE STRUCTURAL CAPACITY OF THE DRILLED SHAFT FOR THE CONTROLLING LOADS AS PART OF DRILLED SHAFT SIZING SELECTION.
14. IF PERMANENT CASING IS USED, AND IS GREATER THAN ⅛" THICK, IT MAY BE CONSIDERED AS PART OF THE REINFORCEMENT AND AS BEING STRUCTURALLY EFFECTIVE TO RESIST AXIAL LOADS AND BENDING MOMENTS AS PER A5.13.4.5.2. HOWEVER, A MINIMUM OF ⅛" MUST BE DEDUCTED FROM THE CASING THICKNESS IN CORROSIVE ENVIRONMENTS, BUT THE DESIGNER SHOULD ALSO GIVE FURTHER CONSIDERATION ON INCREASING THE REDUCTION FOR CASINGS THAT ARE DIRECTLY EXPOSED TO SALT WATER, PARTICULARLY IN SPLASH ZONES.
15. THE DESIGNER WILL EVALUATE THE NEED FOR ROCK SOCKETS IN ALL CASES WHERE THE DRILLED SHAFTS COME INTO CONTACT WITH THE ROCK BED.
16. FOR PILE BENTS, THE DESIGNER MUST DETERMINE THE POINT OF FIXITY AS PER A10.8.3.9 AND SECTION 107.5.4. FURTHERMORE, THE DESIGNER MUST CONSIDER THE SLENDERNESS RATIO WHEN SELECTING THE DRILLED SHAFT SIZE.
17. REFER TO SECTION 107.3.4.6 AND PUBLICATION NO. FHWA-NHI-10-016 (FHWA GEC 010) - 'DRILLED SHAFTS: CONSTRUCTION PROCEDURES AND LRFD DESIGN METHODS' FOR MORE INFORMATION ON DRILLED SHAFTS.

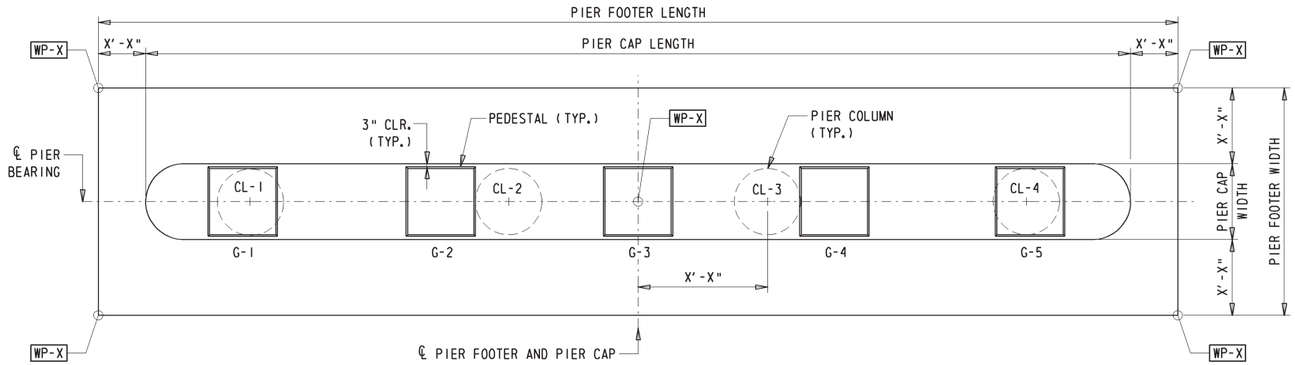

PIER FOOTER AND PIER CAP PLAN

NOTE: C-C GIRDER, SKEW, AND CONSTRUCTION BASELINE UNDER PLAN VIEW NOT SHOWN FOR CLARITY.

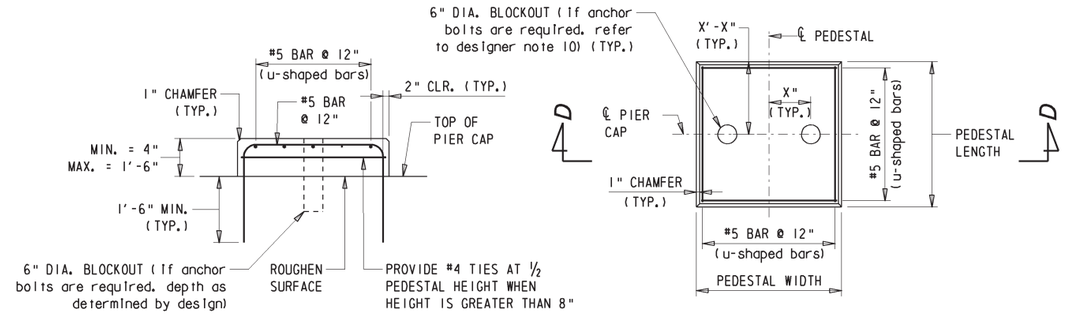

SECTION (D-D)

NOTE: POTENTIAL ANCHOR BOLTS NOT SHOWN FOR CLARITY.

PLAN (B-B)

NOTE: C-C GIRDER, SKEW, AND POTENTIAL ANCHOR BOLTS UNDER PLAN VIEW NOT SHOWN FOR CLARITY.

PEDESTAL REINFORCEMENT

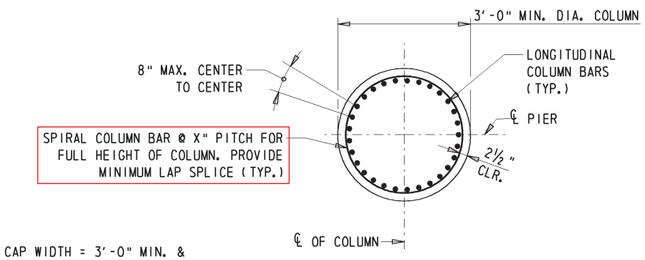

TYPICAL COLUMN SECTION (SECTION C-C)

NOTE: EXAMPLE SHOWN USING SPIRAL REINFORCEMENT. USE OF TIES AS AN ALTERNATIVE IS PERMITTED.

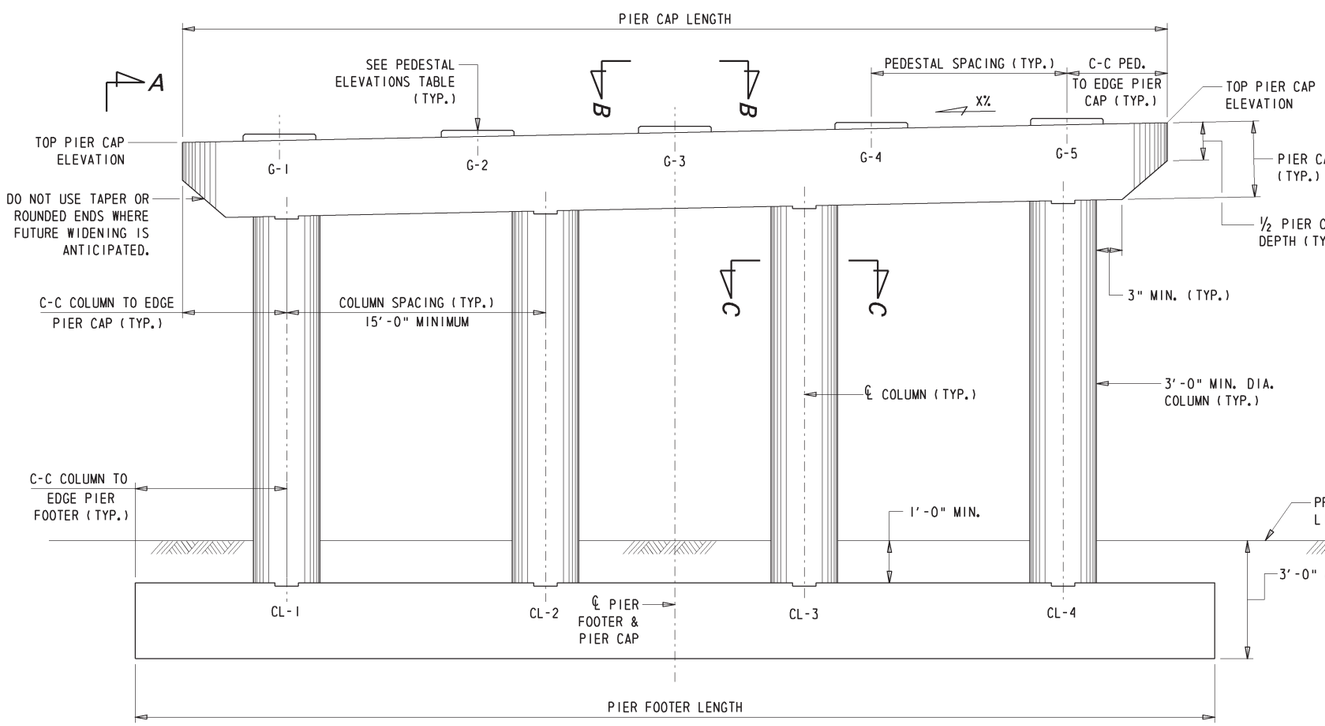

PIER ELEVATION

NOTE: CONSTRUCTION BASELINE AND DEEP FOUNDATION ELEMENTS UNDER ELEVATION AND END VIEWS NOT SHOWN FOR CLARITY. ALSO EXAMPLE UTILIZES CONTINUOUS FOOTING. ISOLATED FOOTINGS MAY BE USED IF DEEMED TO BE ECONOMICAL.

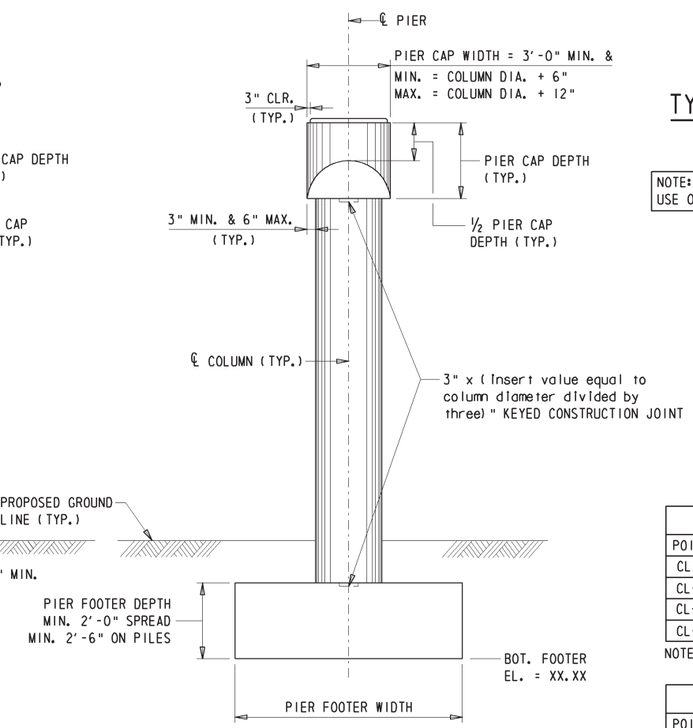

END VIEW (A-A)

NOTE: POTENTIAL PIER PROTECTION NOT SHOWN FOR CLARITY. WHEN REQUIRED, DESIGN PIER PROTECTION IN ACCORDANCE WITH AASHTO LRFD BRIDGE DESIGN SPECIFICATIONS AND INCLUDE SUCH DETAILS ON PLANS.

PEDESTAL ELEVATIONS

GIRDER	ELEVATION
G-1	-------
G-2	-------
G-3	-------
G-4	-------
G-5	-------

PIER COLUMN COORDINATES

POINT	STATION	OFFSET	NORTHING	EASTING
CL-1	-------	-------	-------	-------
CL-2	-------	-------	-------	-------
CL-3	-------	-------	-------	-------
CL-4	-------	-------	-------	-------

NOTE: COORDINATES AT CENTER OF COLUMN.

PIER WORKING POINTS

POINT	STATION	OFFSET	NORTHING	EASTING
WP-X	-------	-------	-------	-------
WP-X	-------	-------	-------	-------
WP-X	-------	-------	-------	-------
WP-X	-------	-------	-------	-------
WP-X	-------	-------	-------	-------

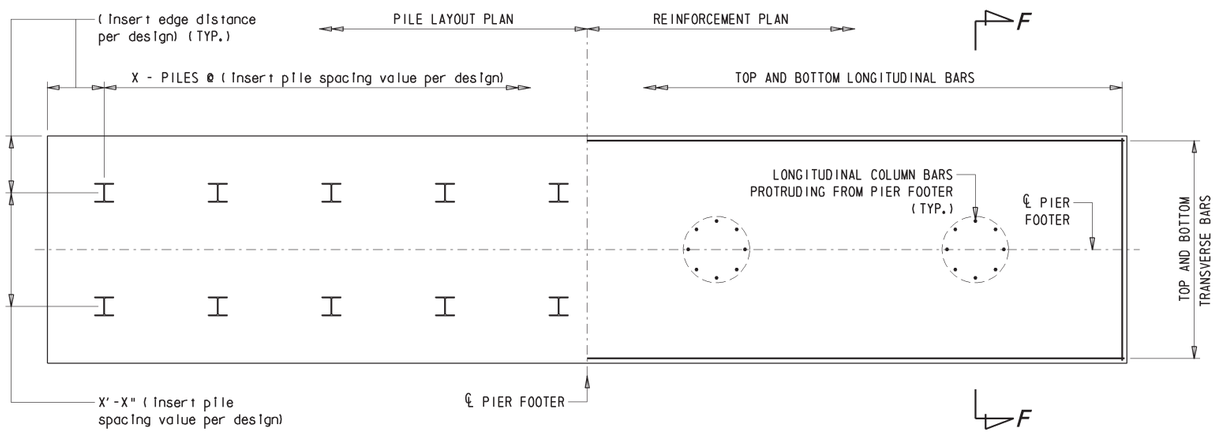

PIER FOOTER REINFORCEMENT AND PILE LAYOUT PLAN

NOTE: PROVIDE WORKING POINTS FOR EACH PILE AND DENOTE ALL BATTERED AND TEST PILES. EXAMPLE SHOWN USING TWO ROWS OF PILES.

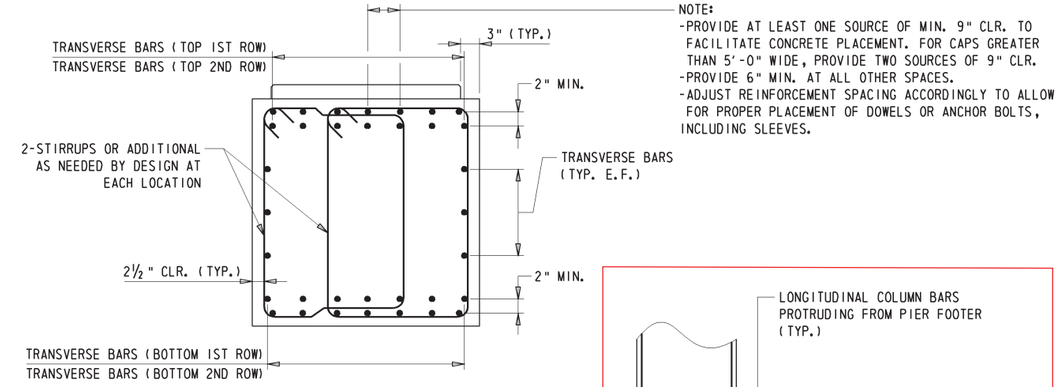

SECTION E-E

NOTE: PEDESTAL REINFORCEMENT NOT SHOWN FOR CLARITY. REFER TO SECTIONS B-B & D-D. EXAMPLE UTILIZES TWO TOP AND BOTTOM TRANSVERSE ROWS.

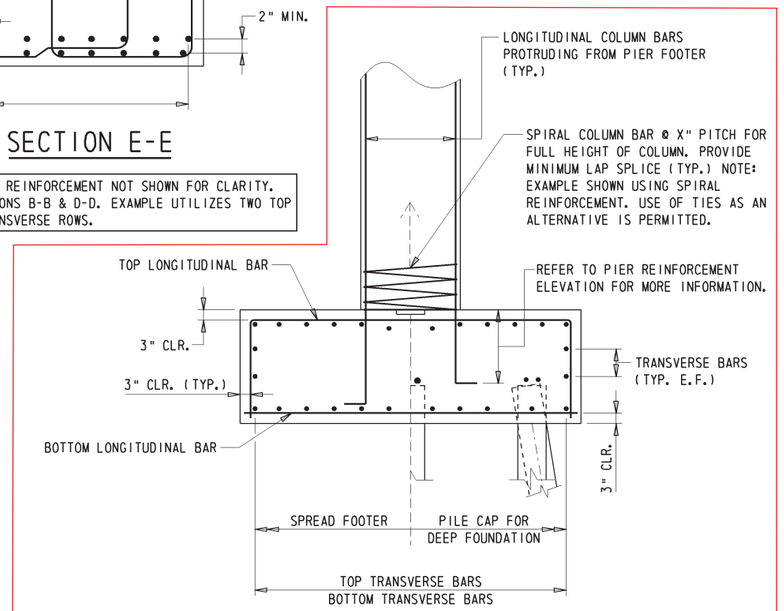

TYPICAL REINFORCEMENT SECTION (F-F)

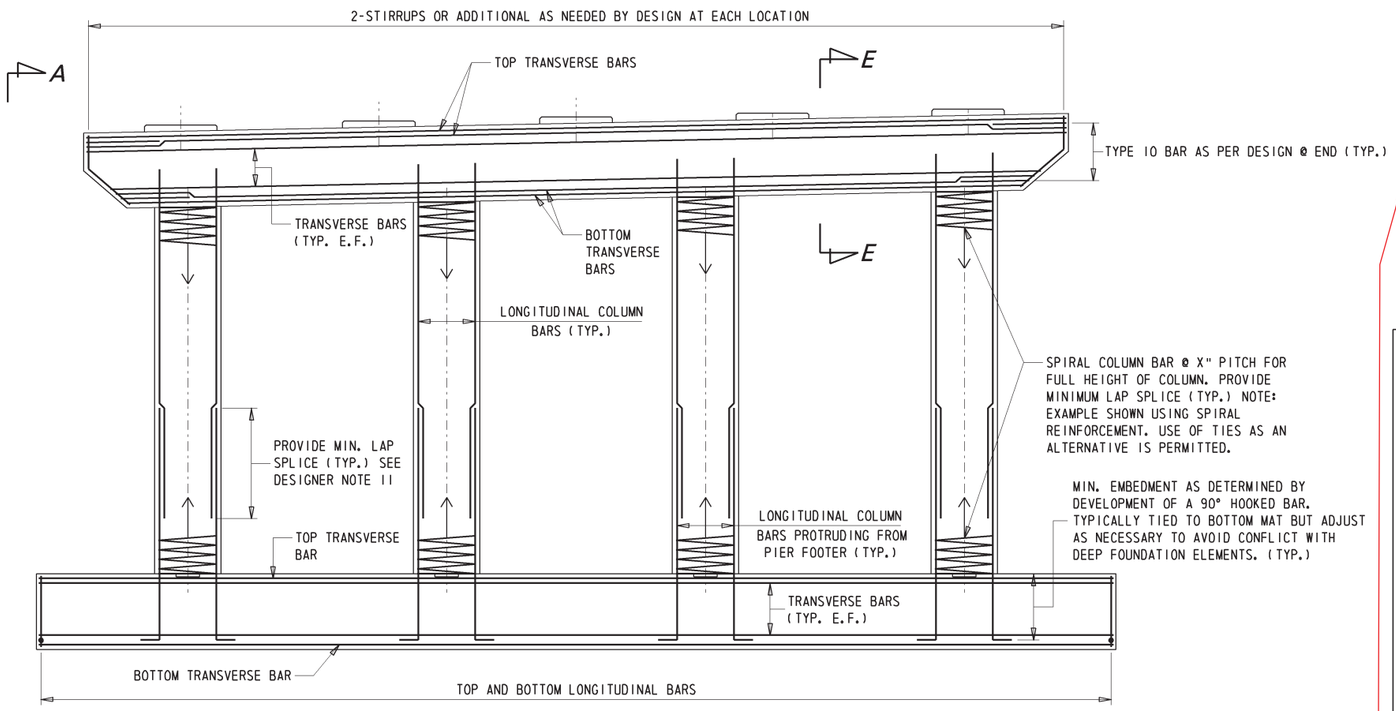

PIER REINFORCEMENT ELEVATION

NOTE: PEDESTAL PAD REINFORCEMENT AND DEEP FOUNDATION ELEMENTS AT ELEVATION VIEW NOT SHOWN FOR CLARITY.

DESIGNER NOTES

1. REFER TO SECTIONS 103.6.3, 107.5, AND 203 FOR MORE INFORMATION ON PIER DESIGN.
2. THE EXAMPLE PIER USED FOR THIS DETAIL IS A 'CAP-AND-COLUMN' TYPE PIER WITH 4 COLUMNS ON A CONSTANT SMALL SUPERELEVATION GRADE. ALSO THE EXAMPLE ASSUMES 5 GIRDERS ARE PRESENT.
3. THE 'PEDESTAL ELEVATIONS' TABLE MUST BE SHOWN ON THE PLANS FOR EACH PEDESTAL LOCATION.
4. THE 'PIER COLUMN COORDINATES' TABLE MUST BE SHOWN ON THE PLANS FOR EACH COLUMN LOCATION.
5. THE 'PIER WORKING POINTS' TABLE MUST BE SHOWN ON THE PLANS. INCLUDE EACH CORNERS AND CENTER OF THE PIER FOOTER AS A MINIMUM. ADDITIONAL WORKING POINTS MAY BE NEEDED AT STEPS OR CONSTRUCTION JOINT LOCATIONS FOR PHASED CONSTRUCTION.
6. UNDER 'END VIEW (A-A)', EXAMPLE PIER PROTECTION NOT SHOWN FOR CLARITY. OPTIONS FOR PIER PROTECTION MAY INCLUDE: STEEL BEAM GUARDRAIL, F-SHAPED BARRIERS, OR DESIGNING THE PIER TO WITHSTAND VEHICULAR COLLISION. REFER TO SECTION 103.3.4 FOR HORIZONTAL CLEARANCE AND PIER PROTECTION. REFER TO A3.6.5 AND A3.14 FOR MORE INFORMATION ON VEHICULAR AND VESSEL COLLISION FORCES.
7. UNDER 'TYPICAL REINFORCEMENT SECTION (F-F)' AND 'PIER FOOTER REINFORCEMENT AND PILE LAYOUT PLAN' THE EXAMPLE DEEP FOUNDATION ELEMENT USED ARE H-PILES. REFER TO DETAIL NO. 305.01 - 305.04 FOR MORE INFORMATION ON DEEP FOUNDATION ELEMENTS THAT ARE TYPICALLY USED ON DELDOT PROJECTS.
8. UNDER 'PIER REINFORCEMENT ELEVATION' AND 'SECTION E-E', THE EXAMPLE USED UTILIZES TWO TRANSVERSE REINFORCEMENT ROWS AT TOP AND BOTTOM OF PIER CAP.
9. FOR BRIDGES OVER RAILROAD, REFER TO SECTIONS 103.3.4.3, 103.3.5.3, 103.10, AND AC3.6.5.1 FOR MORE INFORMATION ON RAILROAD CLEARANCE ENVELOPES AND HORIZONTAL CLEARANCE LIMITS WHERE THE INCORPORATION OF RAILROAD COLLISION FORCES INTO THE DESIGN OF PIERS IS REQUIRED, WHEN CRASH PROTECTION IS NOT PROVIDED.
10. FOR MORE INFORMATION ON ALLOWABLE ALTERNATIVE BLOCKOUT SIZES, REFER TO SECTIONS 106.10.9.2, 107.4.1.5.3, AND 107.5.3 AND ALSO DETAIL NO. 345.01 - ELASTOMERIC BEARING DETAILS. NOTE THAT POTENTIAL ANCHOR RODS FOR MASONRY PLATES NOT SHOWN IN THIS DETAIL.
11. REGARDING SPLICING LONGITUDINAL BARS:
    - ONLY SPLICE BARS IF THE BAR LENGTH EXCEEDS SHIPPING LENGTH REQUIREMENTS OR THE LENGTH IS SUCH THAT ONE PIECE WILL CAUSE CONSTRUCTIBILITY ISSUES BETWEEN THE FOOTER AND COLUMNS.
    - STAGGER SPLICES SUCH THAT NO MORE THAN 50% OF THE REINFORCING BARS ARE SPACED AT ONE LOCATION.
    - USE A 6" MAXIMUM TIE SPACING ALONG THE LENGTH OF THE SPLICE.
    - IF THE ABOVE REQUIREMENTS CANNOT BE MET, FULL MECHANICAL CONNECTION SPLICES CAN BE USED PROVIDED NOT MORE THAN ALTERNATE REINFORCING BARS IN EACH LAYER ARE SPLICED AT A SECTION, AND THE DISTANCE BETWEEN SPLICES OF ADJACENT REINFORCING BARS IS GREATER THAN 24" MEASURED ALONG THE LONGITUDINAL AXIS OF THE COLUMN.

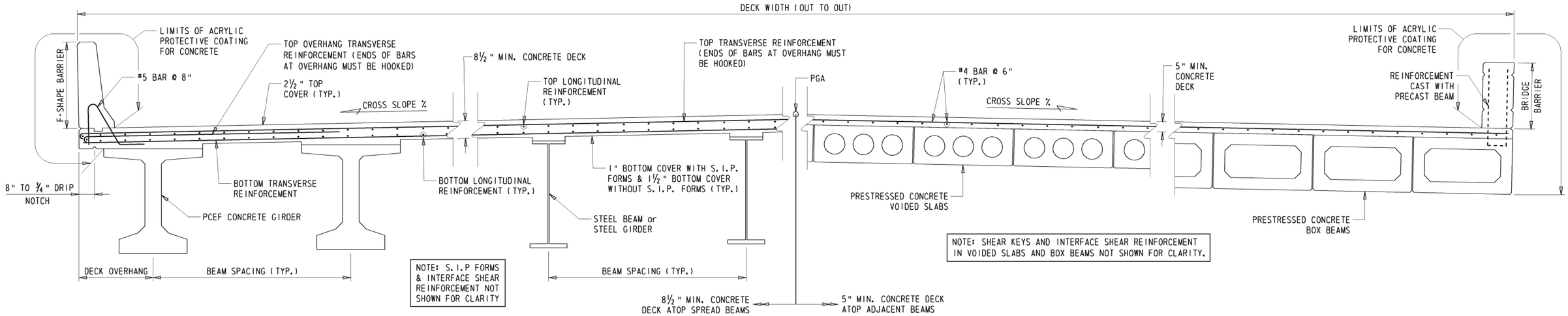

NOTE: S.I.P FORMS & INTERFACE SHEAR REINFORCEMENT NOT SHOWN FOR CLARITY

NOTE: SHEAR KEYS AND INTERFACE SHEAR REINFORCEMENT IN VOIDED SLABS AND BOX BEAMS NOT SHOWN FOR CLARITY.

DECK SECTION

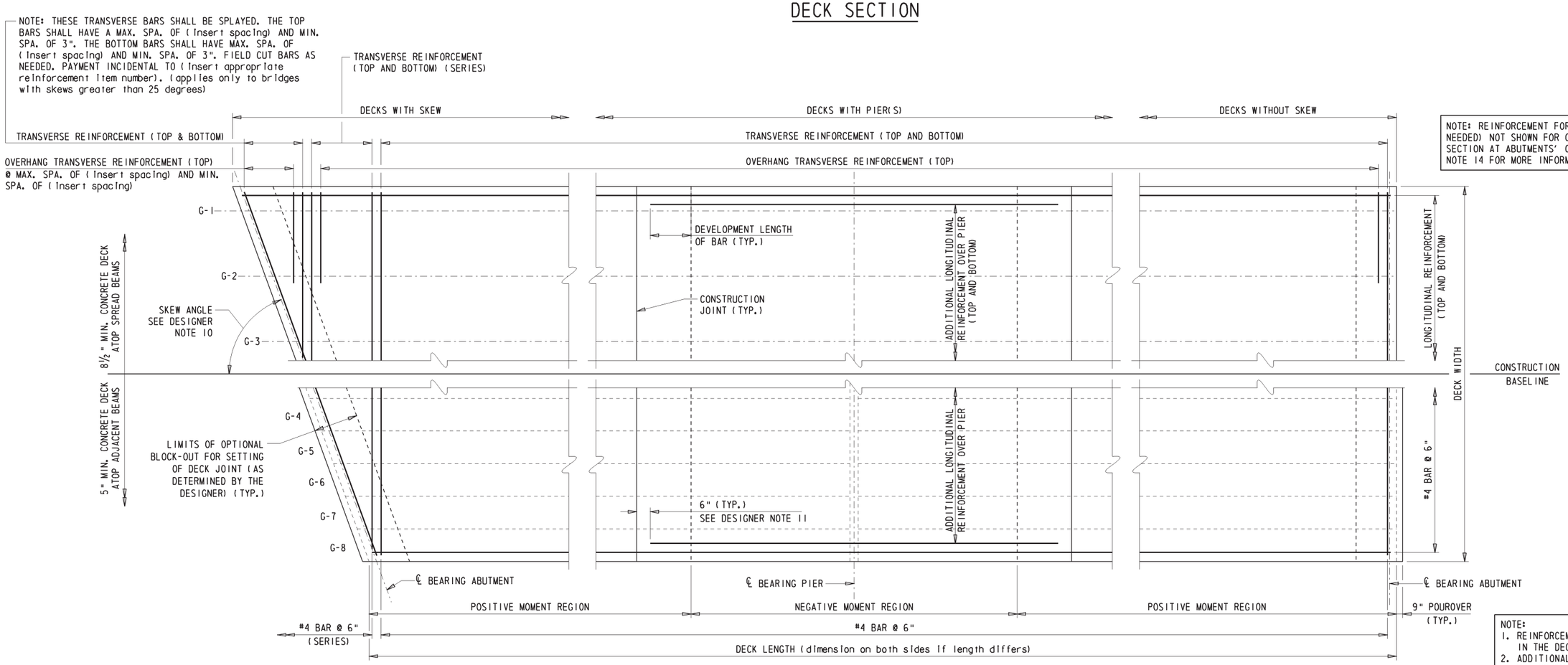

NOTE: REINFORCEMENT FOR DECK END HAUNCH (IF NEEDED) NOT SHOWN FOR CLARITY. REFER TO 'TYPICAL SECTION AT ABUTMENTS' ON SHEET 2 AND DESIGNER NOTE 14 FOR MORE INFORMATION.

DECK PLAN

NOTE:
1. REINFORCEMENT FOR BARRIERS CAST IN THE DECK NOT SHOWN FOR CLARITY.
2. ADDITIONAL REINFORCEMENT AT POUROVER NOT SHOWN FOR CLARITY.
3. ADDITIONAL REINFORCEMENT AT PIER BETWEEN ENDS OF BEAMS NOT SHOWN FOR CLARITY.

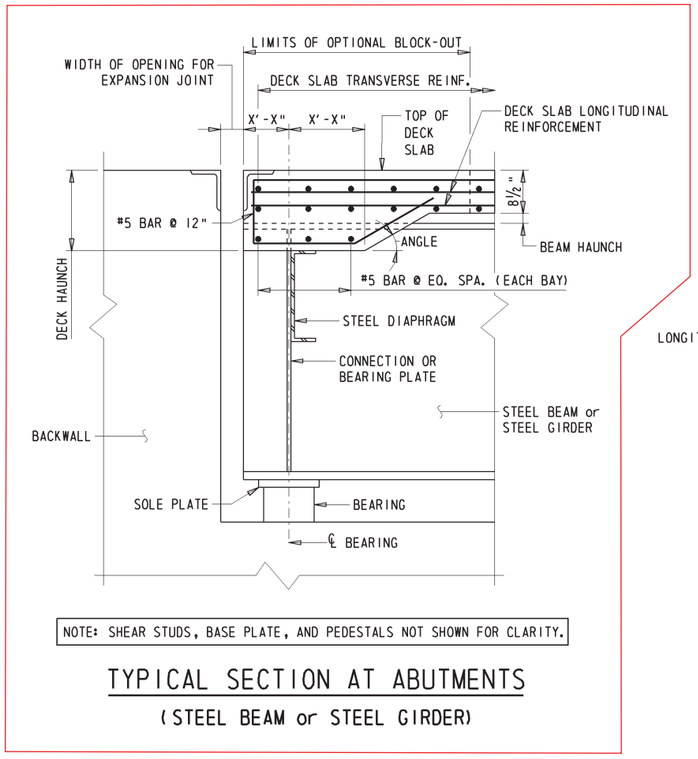

NOTE: SHEAR STUDS, BASE PLATE, AND PEDESTALS NOT SHOWN FOR CLARITY.

TYPICAL SECTION AT ABUTMENTS

(STEEL BEAM or STEEL GIRDER)

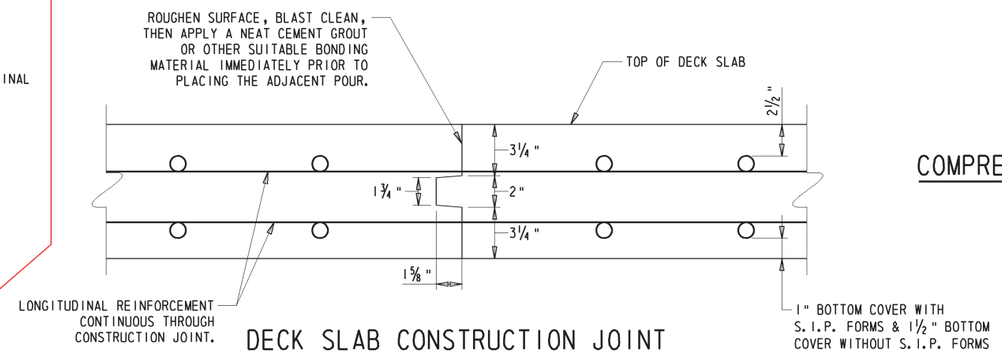

DECK SLAB CONSTRUCTION JOINT

NOTE: TYPICAL FOR 8½" DECK SLABS. INCREASE BOTH 3¼" DIMENSIONS EQUALLY FOR THICKER SLABS.

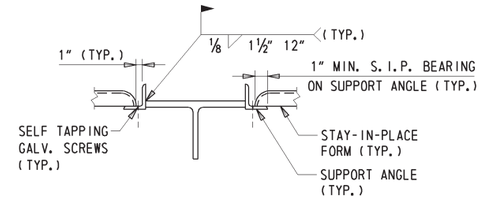

COMPRESSION FLANGE STAY-IN-PLACE FORM CONNECTION DETAIL

(STEEL BEAM or STEEL GIRDER)

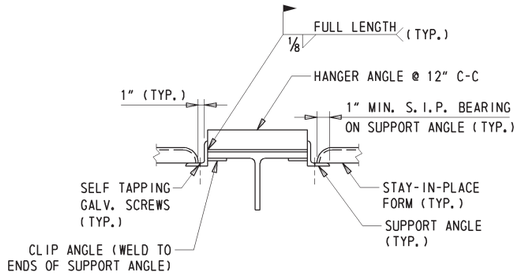

TENSION FLANGE STAY-IN-PLACE FORM CONNECTION DETAIL

(STEEL BEAM or STEEL GIRDER)

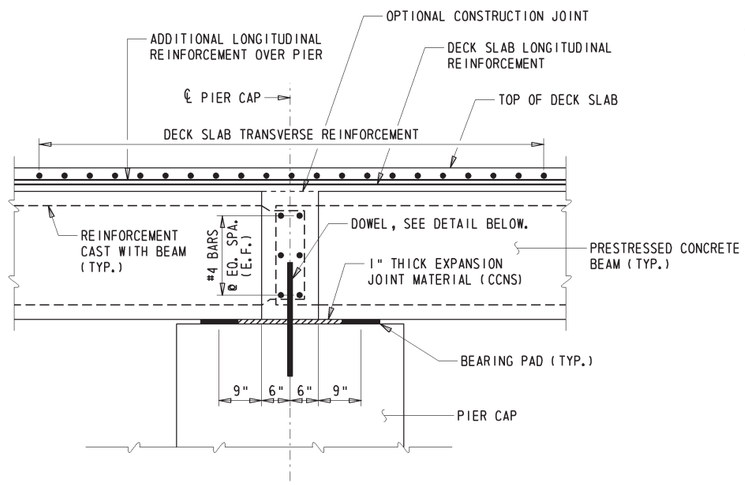

NOTE: THE QUANTITY, LOCATION, AND SPACING OF DOWELS AS DETERMINED BY DESIGNER.

DECK SLAB DETAIL AT PIER

(ADJACENT BEAMS)

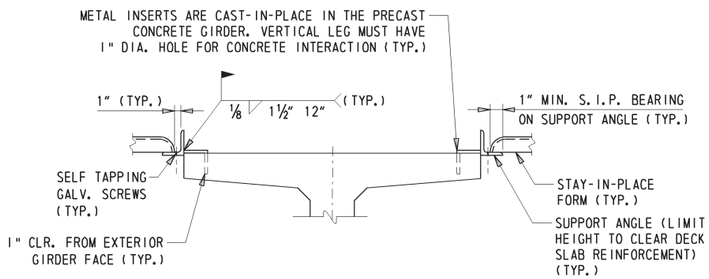

FLANGE STAY-IN-PLACE FORM CONNECTION DETAIL

(PCEF CONCRETE GIRDER SHOWN BUT SAME DETAILS MAY BE USED AT SPREAD BOX BEAMS)

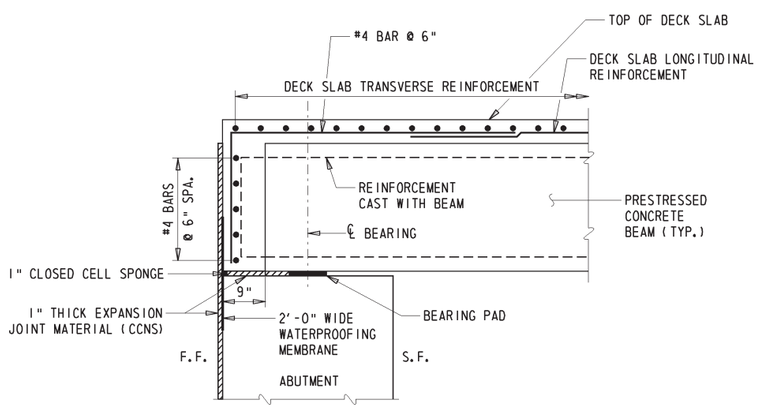

DECK SLAB POUROVER DETAIL

(ADJACENT BEAMS)

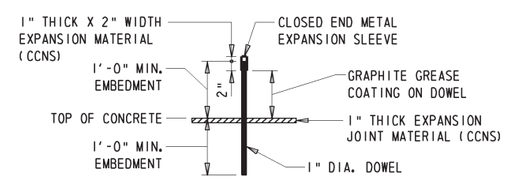

DOWEL DETAIL FOR DECK SLAB AT PIER

(ADJACENT BEAMS OR PCEF GIRDERS @ FIXED BEARING ONLY)

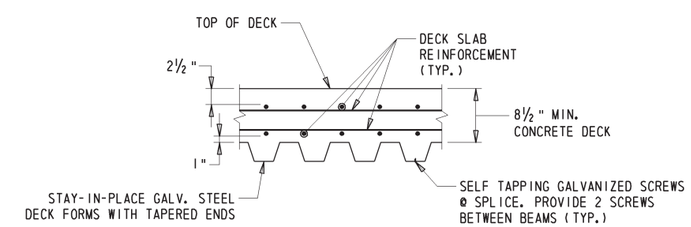

STAY-IN-PLACE STEEL FORM DETAIL

F.F. = FILL FACE
S.F. = STREAM FACE
CCNS = CLOSED CELL NEOPRENE SPONGE

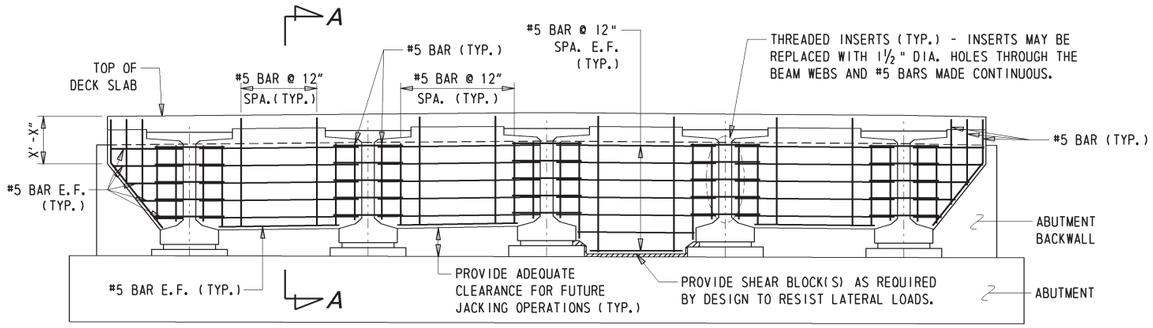

END DIAPHRAGM ELEVATION

NOTE: EXAMPLE UTILIZING PCEF CONCRETE GIRDERS

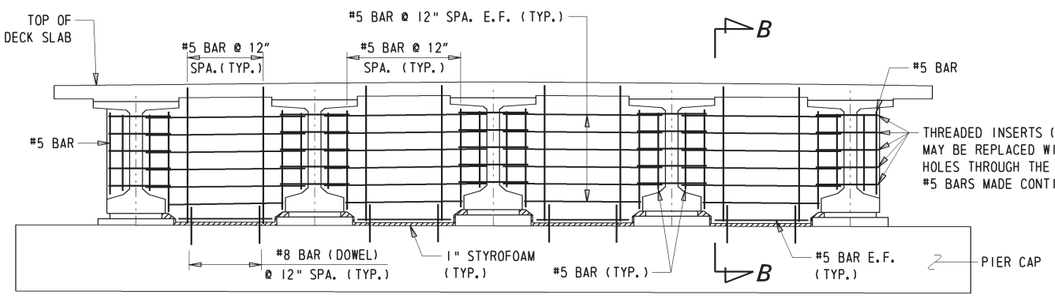

PIER DIAPHRAGM ELEVATION

NOTE: EXAMPLE UTILIZING PCEF CONCRETE GIRDERS

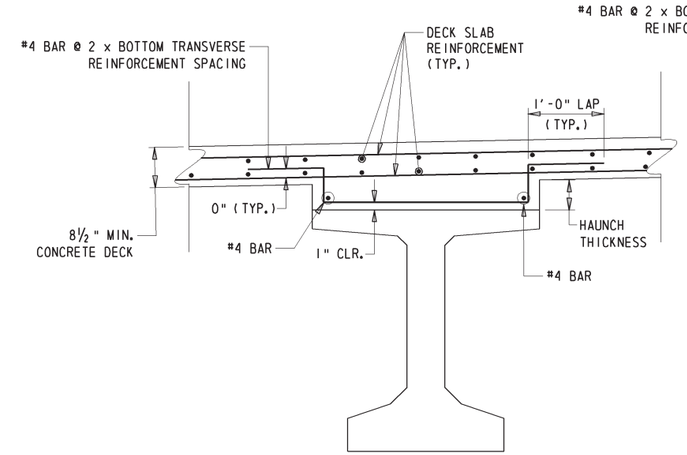

PCEF CONCRETE GIRDERS

HAUNCH REINFORCEMENT IS REQUIRED WHEN HAUNCH THICKNESS IS 5" OR GREATER AT ANY POINT ACROSS THE WIDTH OF HAUNCH IF S.I.P. FORMS ARE USED. IF S.I.P. FORMS ARE NOT USED, THE HAUNCH REINFORCEMENT REQUIREMENT IS LOWERED TO THICKNESS OF 3" OR GREATER.

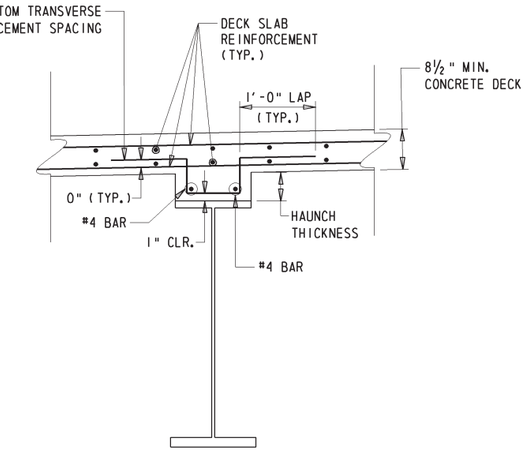

STEEL BEAM AND STEEL GIRDERS

HAUNCH REINFORCEMENT IS REQUIRED WHEN HAUNCH THICKNESS IS 3" OR GREATER AT ANY POINT ACROSS THE WIDTH OF HAUNCH. THIS APPLIES TO BOTH CASES WHERE S.I.P. FORMS ARE USED OR NOT USED.

HAUNCH REINFORCEMENT DETAILS

NOTE: S.I.P FORMS & INTERFACE SHEAR REINFORCEMENT NOT SHOWN FOR CLARITY

NOTE: DIMENSIONS PROVIDED IN PIER DIAPHRAGM SECTIONS ARE BASED ON ZERO SKEW. THE DIMENSIONS WILL LIKELY INCREASE WITH SKEW. EXPANSION JOINT DETAILS AND P/S STRANDS EXTENDING INTO DIAPHRAGM IN THESE SECTIONS NOT SHOWN FOR CLARITY.

NOTE: REFER TO DETAIL NO. 310.03 FOR FURTHER INFORMATION ON SEMI-INTEGRAL DETAILING.

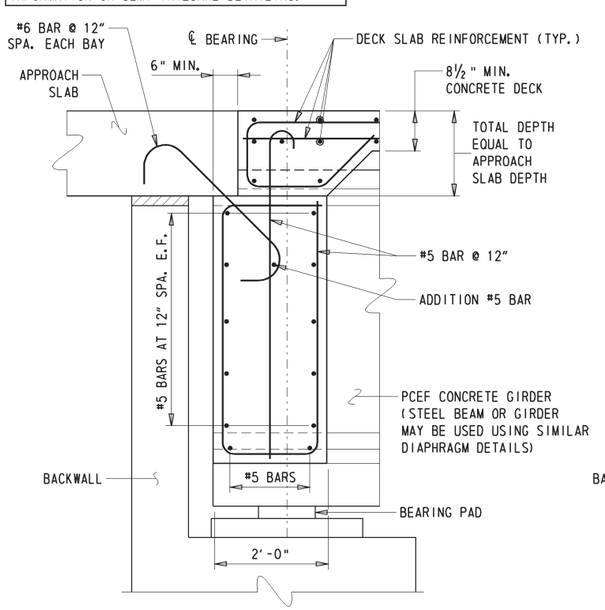

END DIAPHRAGM SECTION

(SEMI-INTEGRAL ABUT. - SECTION A-A)

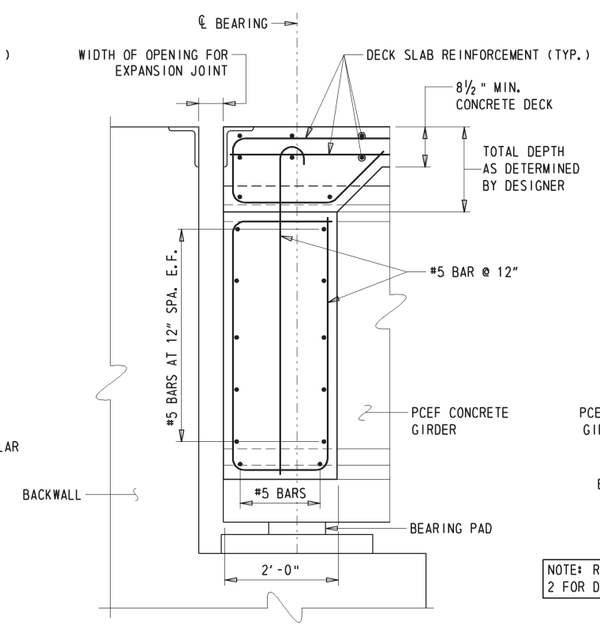

END DIAPHRAGM SECTION

(JOINT @ ABUTMENT & BACKWALL - SECTION A-A)

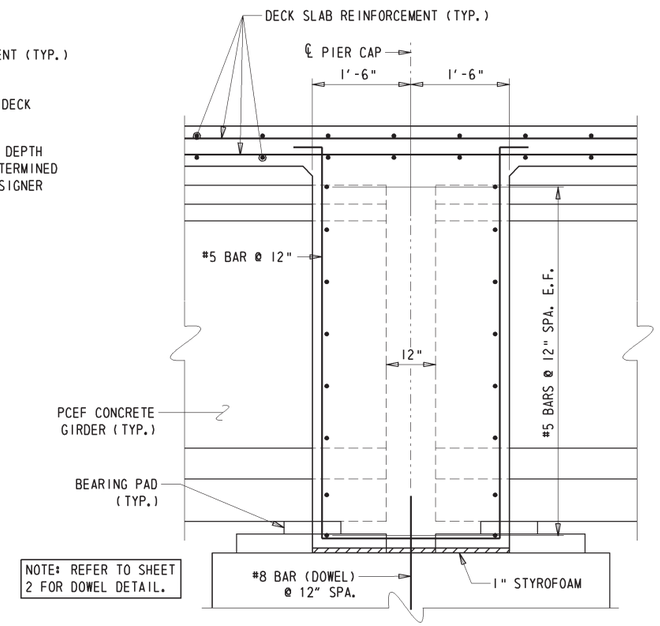

NOTE: REFER TO SHEET 2 FOR DOWEL DETAIL.

PIER DIAPHRAGM SECTION

(FIXED BEARINGS - SECTION B-B)

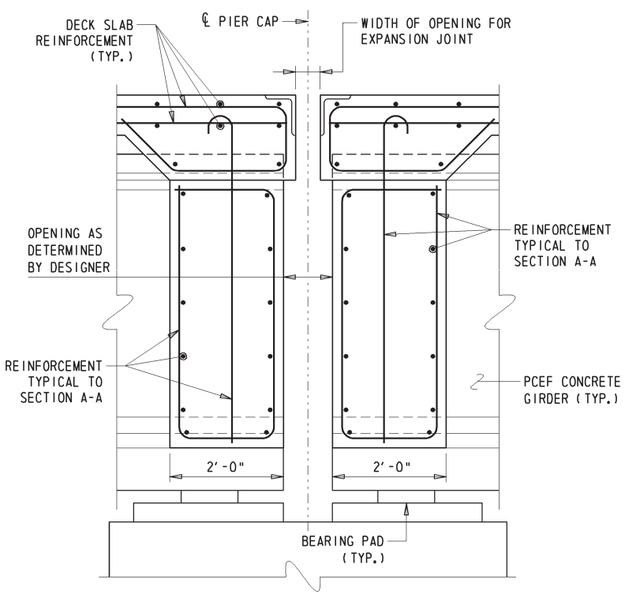

PIER DIAPHRAGM SECTION

(EXPANSION BEARINGS - SECTION B-B)

DELAWARE DEPARTMENT OF TRANSPORTATION
BRIDGE DESIGN MANUAL

CONCRETE DECK DETAILS

NOT TO SCALE

ISSUE DATE 10/01/2015

DETAIL No. 325.01

SHEET No. 3 of 4

PROJECT SPECIFIC NOTES

1. (phased construction only) MECHANICAL COUPLERS SHALL BE USED AT LOCATIONS WHERE USE OF LAP SPLICES ARE NOT FEASIBLE. MECHANICAL COUPLERS SHALL BE EPOXY COATED. PAYMENT FOR COUPLERS SHALL BE INCIDENTAL TO THE APPROPRIATE BAR REINFORCEMENT ITEM.
2. (phased construction only) REINFORCEMENT CONNECTED VIA MECHANICAL COUPLERS MAY NEED TO BE FIELD CUT TO ALLOW FOR PROPER ROOM FOR THE COUPLER. PAYMENT FOR SUCH WORK SHALL BE INCIDENTAL TO THE APPROPRIATE BAR REINFORCEMENT ITEM.
3. (phased construction only) THE CONTRACTOR HAS THE OPTION TO DRILL IN LIEU OF USING MECHANICAL COUPLERS. #(insert reinforcing bar number) MUST BE USED. THE BARS MUST BE EMBEDDED INTO THE DECK A MINIMUM OF (insert length) EACH WAY. ANY DRILLING MUST NOT COME INTO CONTACT WITH THE EXISTING REINFORCEMENT. ANY DAMAGE TO THE EXISTING REINFORCEMENT MUST BE REPAIRED AT THE CONTRACTOR'S EXPENSE TO THE SATISFACTION OF THE ENGINEER.

STAY-IN-PLACE FORM NOTES

1. THESE FORMS SHALL BE VERTICALLY ADJUSTED TO ATTAIN LINE AND GRADE REQUIRED ON THE PLANS.
2. THE CONTRACTOR SHALL SUBMIT SHOP DRAWINGS FOR APPROVAL. METAL FORMS MUST BE GALVANIZED AND MORTAR TIGHT. STEEL METAL SCREWS MUST BE NON-CORROSIVE. SELF TAPPING SCREWS SHALL BE INSTALLED AT THE SIDE LAP OF THE SHEETS AT MID-SPAN SUPPORTS. ALL ANGLES, WELDS, AND INSERTS MUST BE DESIGNED BY THE CONTRACTOR.
3. ALL MATERIALS AND LABOR NEEDED FOR FORMS SHALL BE INCIDENTAL TO ITEM 610017 - P.C.C. MASONRY, SUPERSTRUCTURE, CLASS D.
4. (for multi-span steel beams or steel girders only) TENSION FLANGE DETAIL IS IN THE AREA ALONG THE BEAM BETWEEN SPLICES.
5. (for multi-span steel beams or steel girders only) WELDING TO STEEL BEAM FLANGES IN TENSION ZONE IS STRICTLY PROHIBITED.

DESIGNER NOTES

1. 'PROJECT SPECIFIC NOTES' AND 'STAY-IN-PLACE FORM NOTES' ARE REQUIRED TO BE SHOWN ON THE PLAN SETS WHEN APPLICABLE.
2. UNDER 'STAY-IN-PLACE FORM NOTES', IF ECONOMICAL FOR REHABILITATION PROJECTS OR WHEN DEAD LOAD IS A CONTROL, ADD A NOTE THAT METAL FORMS WITH BLOCKED OUT VALLEYS MAY BE USED.
3. UNDER 'DECK SECTION', A TYPICAL DECK THICKNESS OF 8½" OVER SPREAD BEAMS IS SHOWN. THE ALLOWABLE RANGE AS PER SECTION 106.4.2.2 IS 8½" TO 10" THICK. NOTE THAT THE ½" THICK INTEGRAL SACRIFICIAL WEARING SURFACE IS INCLUDED IN THE ALLOWABLE RANGE.
4. UNDER 'DECK SECTION', THE EXAMPLE BARRIER USED ON DECK OVER SPREAD BEAMS IS A C.I.P. F-SHAPE BARRIER. THE EXAMPLE BARRIER USED ON DECK OVER ADJACENT BEAMS IS A C.I.P. VERTICAL FACE BARRIER, TYPICALLY WITH AESTHETIC RUSTICATION ON BOTH FACES OF THE BARRIER. REFER TO DETAIL NO. 325.02 - BRIDGE RAILING DETAILS AND SECTION 106.5 FOR MORE INFORMATION ON BRIDGE BARRIERS AND RAILINGS.
5. UNDER 'DECK SECTION', IF REQUIRED, THE LIMITS OF ACRYLIC PROTECTIVE COATING FOR CONCRETE MUST BE SHOWN ON THE PLANS IN ACCORDANCE WITH SECTION 106.5.1.
6. UNDER 'DECK SECTION', S.I.P FORMS ARE NOT SHOWN FOR CLARITY, BUT IT IS THE DEPARTMENT'S PREFERENCE TO UTILIZE USE OF S.I.P. FORMS FOR C.I.P. DECKS. REFER TO SECTION 106.4.2.
7. UNDER 'DECK SECTION' AND 'DECK PLAN', FOR SPREAD BEAMS, IT IS ASSUMED THAT THE REINFORCEMENT UTILIZES THE EMPIRICAL DESIGN IN ACCORDANCE WITH A9.7.2 WHICH TYPICALLY CONSIST OF #5 BARS AT 12" SPACING. NOTE THAT THE AASHTO CRITERIA TO QUALIFY THE USE OF EMPIRICAL DESIGN MUST BE MET.
8. UNDER 'DECK SECTION' AND 'DECK PLAN', FOR ADJACENT BEAMS, THE REINFORCEMENT USED IS #4 AT 6" FOR A SINGLE MAT IN EACH DIRECTION IN ACCORDANCE WITH SECTION 106.4.2.3.2.
9. UNDER 'DECK SECTION' AND 'DECK PLAN', ANY ADDITIONAL LONGITUDINAL REINFORCEMENT USED OVER PIER(S) TO RESIST NEGATIVE MOMENTS MUST MEET REQUIREMENTS OF A6.10.1.7 FOR STEEL BEAMS or STEEL GIRDERS AND APPROPRIATE SUBSECTIONS IN A5 FOR PRECAST PRESTRESSED CONCRETE BEAMS.
10. UNDER 'DECK PLAN', THE TRANSVERSE REINFORCEMENT LAYOUT AT THE SKEW IS SHOWN WITH ASSUMPTION THAT THE BRIDGE SKEW IS GREATER THAN 25 DEGREES. FOR BRIDGES WITH SKEW OF 25 DEGREES OR LESS, THE TRANSVERSE REINFORCEMENT LAYOUT MUST BE PLACED PARALLEL TO THE C-C BEARINGS. REFER TO SECTION 106.4.2.3.1.1. THIS APPLIES BOTH TO DECKS OVER SPREAD BEAMS AND ADJACENT BEAMS.
11. UNDER 'DECK PLAN', THE TRANSVERSE CONSTRUCTION JOINT ADJACENT TO NEGATIVE MOMENTS MUST BE LOCATED 6 INCHES OUTSIDE OF THE END OF THE ADDITIONAL LONGITUDINAL REINFORCEMENT OVER PIER(S) IN ACCORDANCE WITH SECTION 106.4.2.10. ALSO REFER TO 'DECK SLAB CONSTRUCTION JOINT' ON SHEET 2 OF THIS DETAIL, WHICH MUST BE SHOWN ON THE PLAN SET.
12. UNDER 'DECK PLAN', THE BARRIER REINFORCEMENTS TO BE CAST WITH THE DECK ARE NOT SHOWN FOR CLARITY, BUT MUST BE SHOWN ON THE PLANS.
13. UNDER 'DECK PLAN', IF ANY LAP SPLICING ARE NEEDED, THE MINIMUM LENGTH OF THE LAP SPLICE FOR EACH BAR SIZE MUST BE SHOWN ON THE DECK PLAN.
14. UNDER 'TYPICAL SECTION AT ABUTMENTS', THIS DETAIL IS ONLY FOR STEEL BEAM OR STEEL GIRDERS UTILIZING EXPANSION JOINTS BETWEEN ABUTMENT BACKWALL AND END OF DECK. THE END DECK HAUNCH MUST REST ATOP THE END DIAPHRAGMS. THE END DIAPHRAGM SHOWN IS A C-CHANNEL, BUT OTHER END DIAPHRAGM TYPES MAY BE CONSIDERED. THE DIMENSIONS OF THE DECK END HAUNCH VARIES AND MUST BE DETERMINED BY THE DESIGNER ON A CASE-BY-CASE BASIS. SUCH DETAILS WERE NOT SHOWN FOR EXPANSION JOINTS AT PIERS SINCE THESE ARE NOT COMMON, HOWEVER IF THERE ARE NEED FOR SUCH JOINTS AT PIERS, THE DETAILS AS SHOWN UNDER 'TYPICAL SECTIONS AT ABUTMENTS' ARE SIMILAR AND MUST BE SHOWN ON THE PLANS.
15. UNDER 'DECK SLAB POUROVER DETAIL', THIS DETAIL IS FOR ADJACENT BEAMS ONLY AND IS CONSIDERED A PART OF SEMI-INTEGRAL ABUTMENT SYSTEM. THE INFORMATION SHOWN UNDER THIS DETAIL IS TYPICAL FOR MAJORITY OF THE PROJECTS THAT UTILIZES DECK SLAB POUROVER. THE DESIGNER MUST EVALUATE THE NEED TO MODIFY THE DETAILS IF NECESSARY. REFER TO DETAIL NO. 310.03 FOR MORE INFORMATION ON ABUTMENT DETAILS FOR THE DECK SLAB POUROVER.
16. UNDER 'DECK SLAB DETAIL AT PIER', THIS DETAIL IS FOR ADJACENT BEAMS ONLY. THE INFORMATION SHOWN UNDER THIS DETAIL IS TYPICAL FOR MAJORITY OF THE PROJECTS. THE DESIGNER MUST EVALUATE THE NEED TO MODIFY THE DETAILS IF NECESSARY.
17. STAY-IN-PLACE FORM DETAILS MUST BE SHOWN FOR THE APPROPRIATE BEAM TYPE AND BRIDGE TYPE ON THE PLANS.
18. UNDER 'DECK SLAB POUR SEQUENCE', THE EXAMPLE SHOWN IS FOR A 2-SPAN BRIDGE. FOR MORE INFORMATION ON DECK POUR SEQUENCE, REFER TO SECTION 106.4.2.6 ANY PHASING WORK WILL REQUIRE ADDITIONAL INFORMATION AND MUST BE SHOWN ON THE PLANS.
19. UNDER 'FINISHED DECK ELEVATIONS', THE EXAMPLE SHOWN IS FOR A 2-SPAN BRIDGE ON CONSTANT GRADE. REFER TO SECTION 106.4.3 FOR MORE INFORMATION.
20. THE DESIGNER MUST CONSIDER THE AFFECTS OF CAMBER OF PRESTRESSED CONCRETE BEAMS WHEN SETTING THEIR DECK GRADES. THE DECKS OR HAUNCHES WILL TYPICALLY BE THICKER AT THE ENDS OF THE BEAM THAN AT THE CENTER OF SPAN.

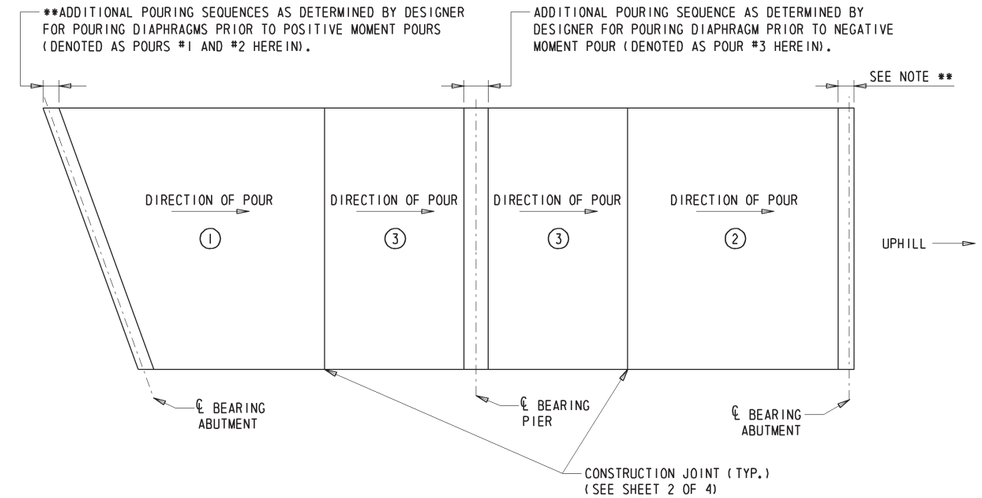

DECK SLAB POUR SEQUENCE

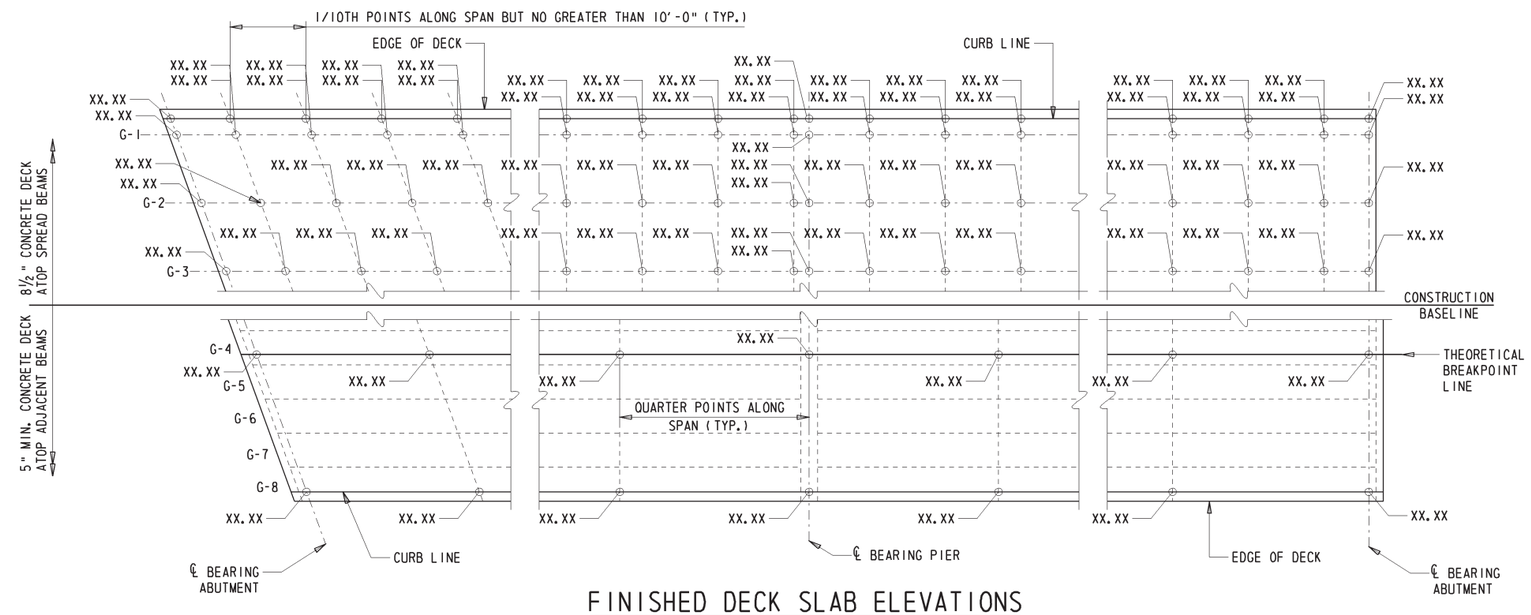

FINISHED DECK SLAB ELEVATIONS

TL-3 OPTION A

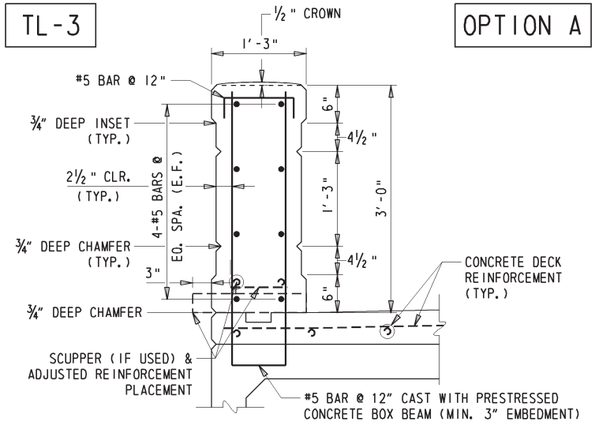

3'-0" VERTICAL FACE BARRIER SECTION

(EXAMPLE: BARRIER ATOP 5" CONCRETE DECK ON ADJACENT BOX BEAMS)

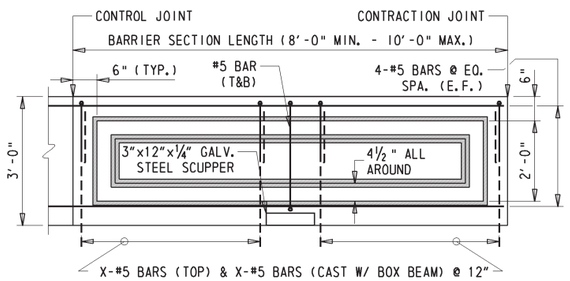

TYPICAL INTERIOR BARRIER WITH SCUPPER

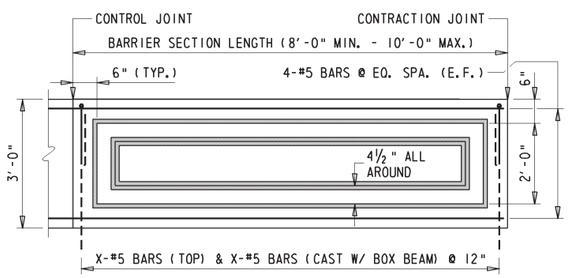

TYPICAL INTERIOR BARRIER

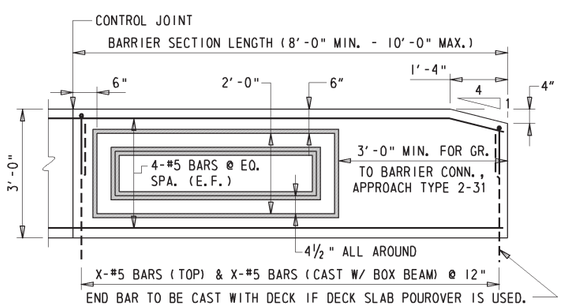

TYPICAL END BARRIER

TL-3 OPTION B

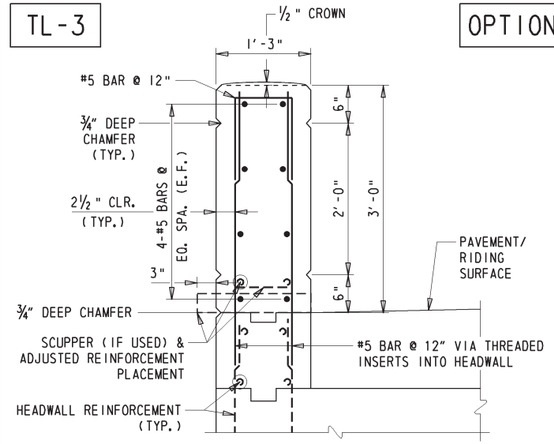

3'-0" VERTICAL FACE BARRIER SECTION

(EXAMPLE: BARRIER ATOP RIGID FRAME OR BOX CULVERT HEADWALL)

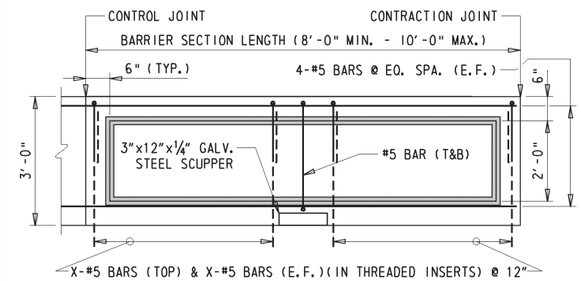

TYPICAL INTERIOR BARRIER WITH SCUPPER

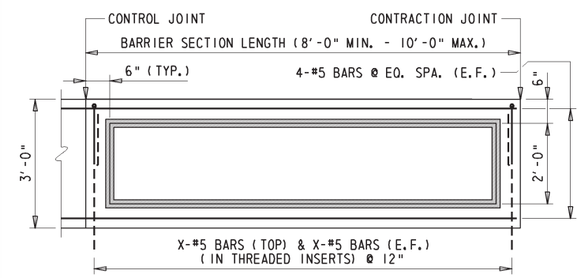

TYPICAL INTERIOR BARRIER

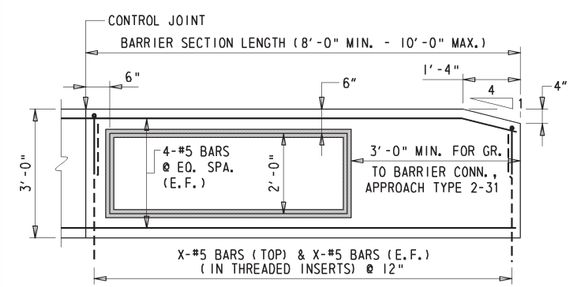

TYPICAL END BARRIER

TL-4

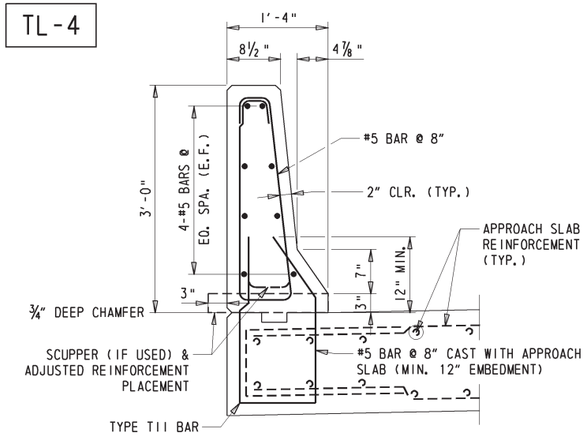

3'-0" F-SHAPE BARRIER SECTION

(EXAMPLE: BARRIER ATOP APPROACH SLAB)

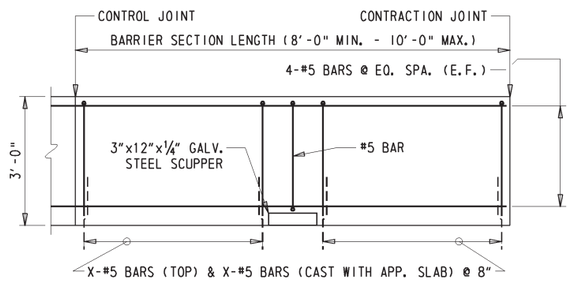

TYPICAL INTERIOR BARRIER WITH SCUPPER

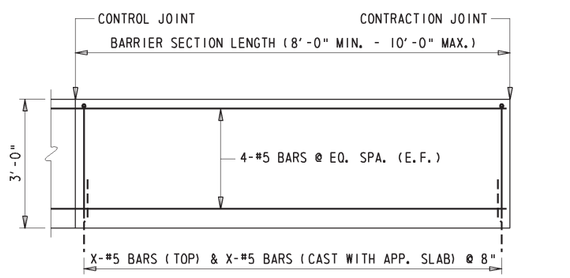

TYPICAL INTERIOR BARRIER

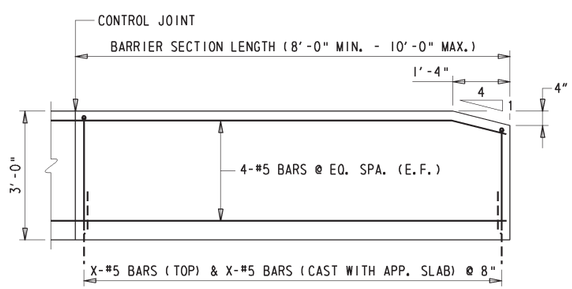

TYPICAL END BARRIER

FOR ATTACHMENT WITH GR. TO BARRIER CONN., APPROACH TYPE 1-31

TL-5

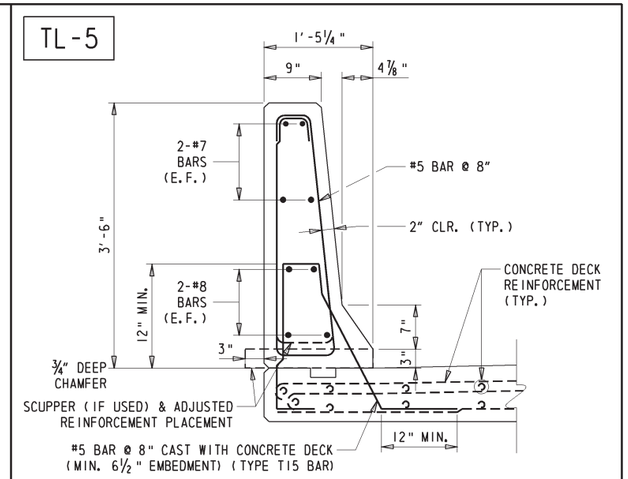

3'-6" F-SHAPE BARRIER SECTION

(EXAMPLE: BARRIER ATOP 8½" CONCRETE DECK)

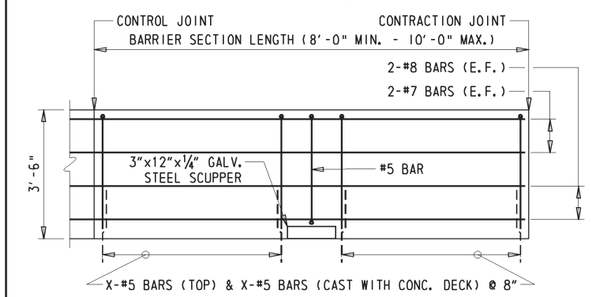

TYPICAL INTERIOR BARRIER WITH SCUPPER

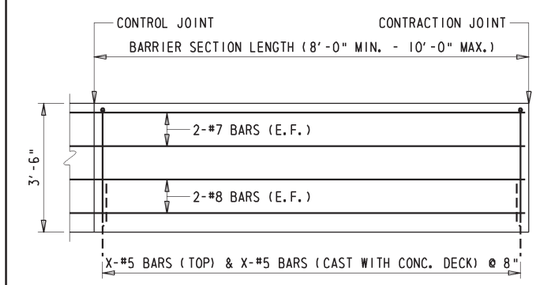

TYPICAL INTERIOR BARRIER

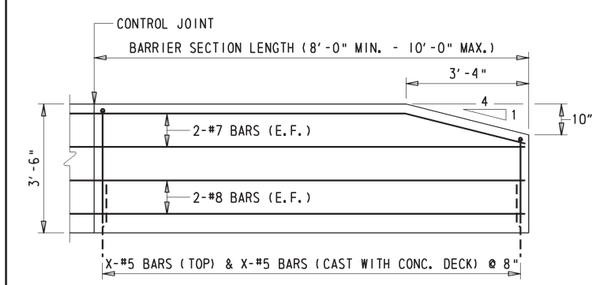

TYPICAL END BARRIER

FOR ATTACHMENT WITH GR. TO BARRIER CONN., APPROACH TYPE 1-31

TL-5

NOTE: POTENTIAL SCUPPER NOT SHOWN FOR CLARITY.

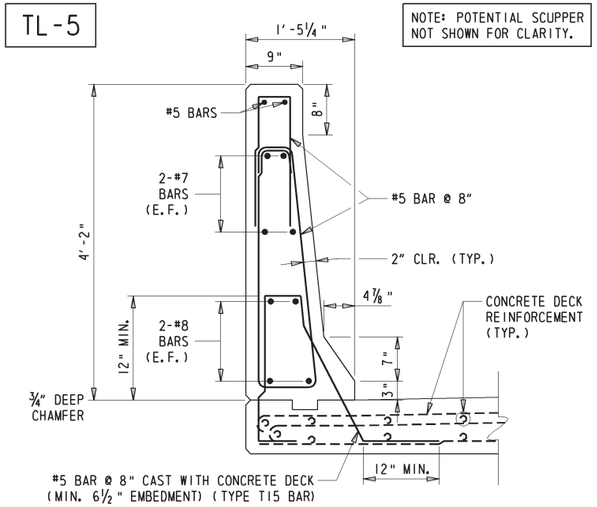

4'-2" F-SHAPE BARRIER SECTION

(EXAMPLE: BARRIER ATOP 8½" CONCRETE DECK)

NOTE: TYPICALLY USED AS GLARE SCREEN MEDIAN BARRIER.

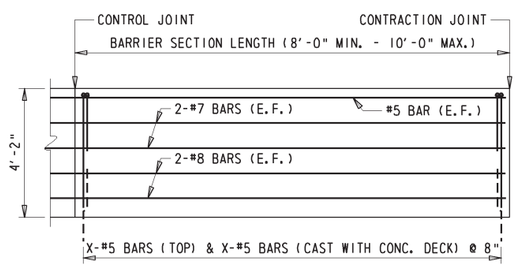

TYPICAL INTERIOR BARRIER

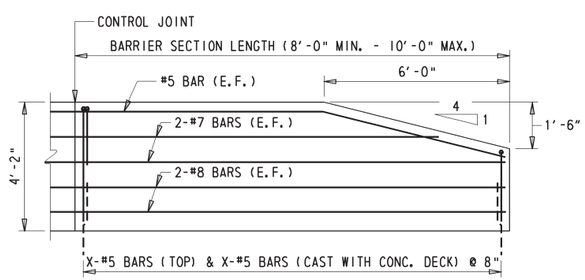

TYPICAL END BARRIER

FOR ATTACHMENT WITH GR. TO BARRIER CONN., APPROACH TYPE 1-31

TL-5

NOTE: POTENTIAL SCUPPER NOT SHOWN FOR CLARITY.

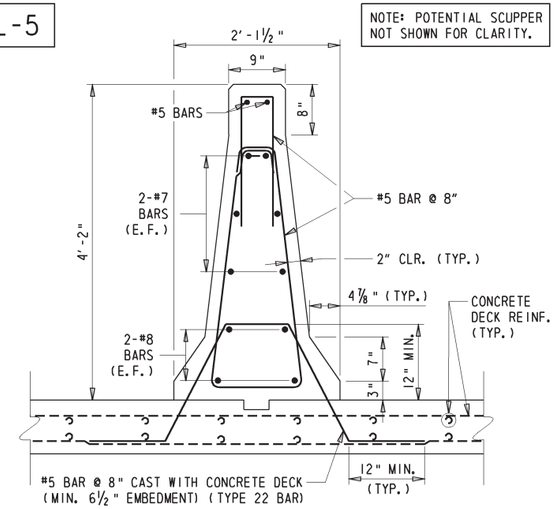

4'-2" F-SHAPE MEDIAN BARRIER SECTION

(EXAMPLE: BARRIER ATOP 8½" CONCRETE DECK)

NOTE: TYPICALLY USED AS GLARE SCREEN MEDIAN BARRIER. THIS EXAMPLE ASSUMES CURB WILL BE CONSTRUCTED ON BOTH FACES OF THE BARRIER.

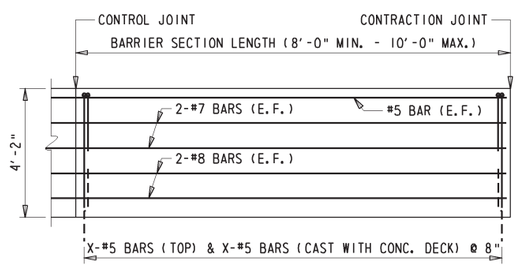

TYPICAL INTERIOR BARRIER

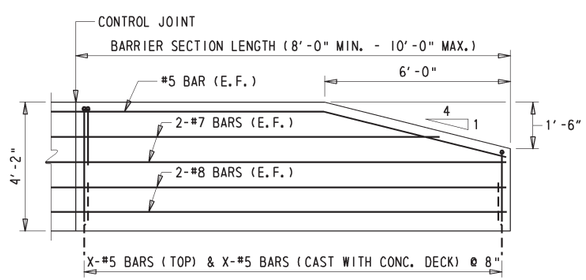

TYPICAL END BARRIER

FOR ATTACHMENT WITH GR. TO BARRIER CONN., APPROACH TYPE 1-31

TL-5

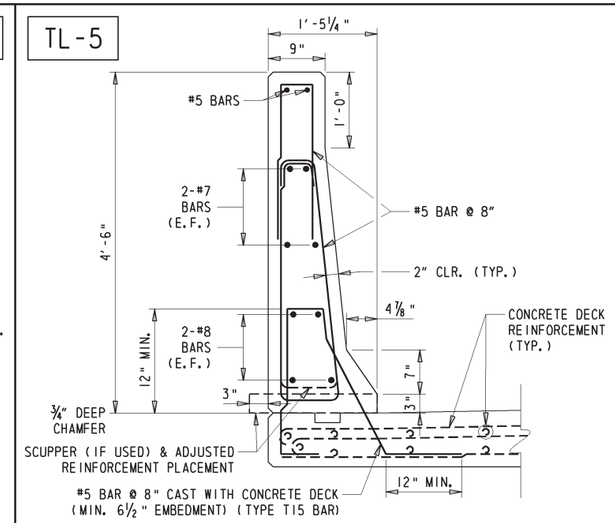

4'-6" F-SHAPE BARRIER SECTION

(EXAMPLE: BARRIER ATOP 8½" CONCRETE DECK)

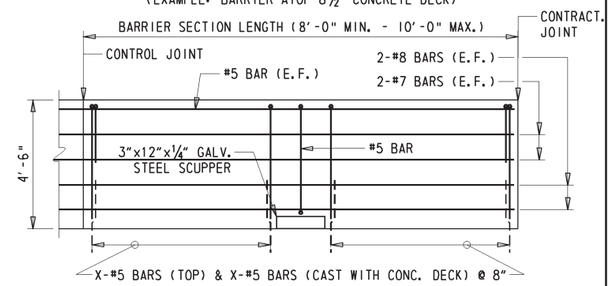

TYPICAL INTERIOR BARRIER WITH SCUPPER

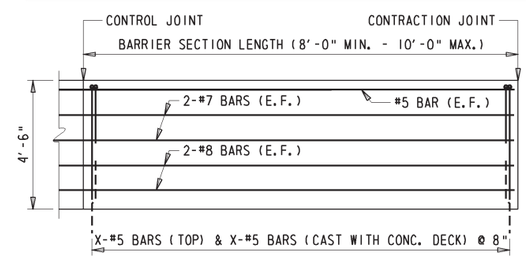

TYPICAL INTERIOR BARRIER

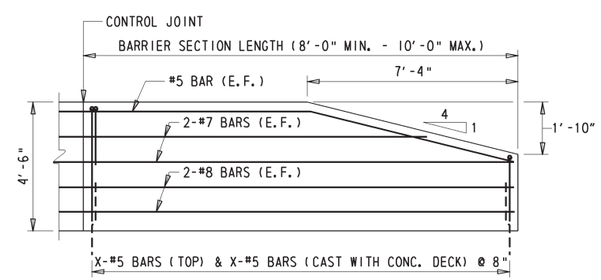

TYPICAL END BARRIER

FOR ATTACHMENT WITH GR. TO BARRIER CONN., APPROACH TYPE 1-31

TL-2

NOTE: ALUMINUM RAILING DETAILS ATOP PARAPET NOT SHOWN FOR CLARITY. REFER TO SHEET 4 FOR ALUMINUM HANDRAIL DETAILS.

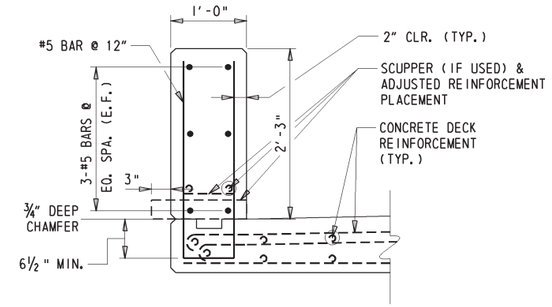

2'-3" PARAPET SECTION

(EXAMPLE: PARAPET ATOP 8½" CONCRETE DECK)

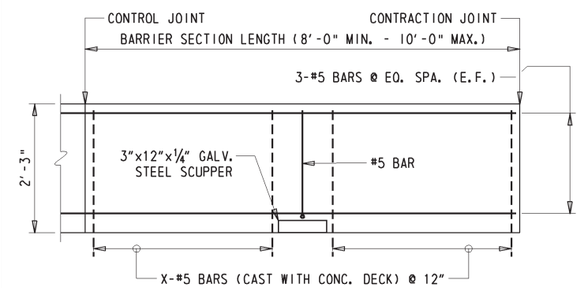

TYPICAL INTERIOR PARAPET WITH SCUPPER

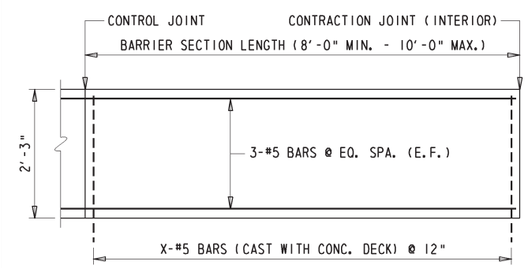

TYPICAL INTERIOR & END PARAPET

TL-4

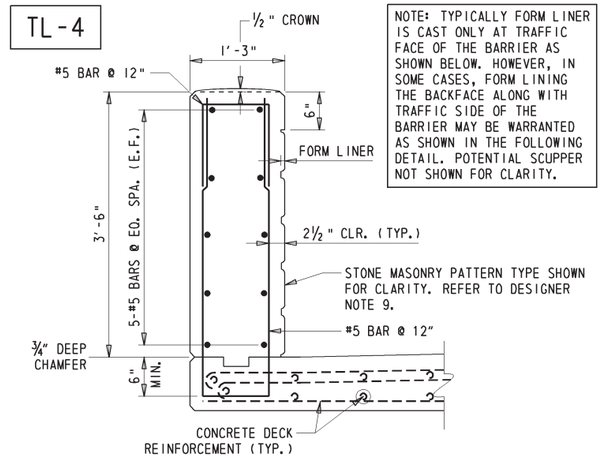

NOTE: TYPICALLY FORM LINER IS CAST ONLY AT TRAFFIC FACE OF THE BARRIER AS SHOWN BELOW. HOWEVER, IN SOME CASES, FORM LINING THE BACKFACE ALONG WITH TRAFFIC SIDE OF THE BARRIER MAY BE WARRANTED AS SHOWN IN THE FOLLOWING DETAIL. POTENTIAL SCUPPER NOT SHOWN FOR CLARITY.

3'-6" FORM-LINER BARRIER SECTION

(EXAMPLE: TRAFFIC-SIDED FORM-LINER BARRIER ATOP 8½" CONCRETE DECK)

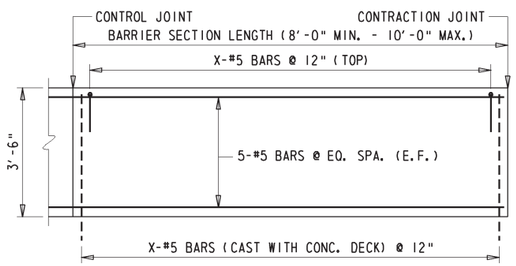

TYPICAL INTERIOR BARRIER

(FORM LINER FACE NOT SHOWN FOR CLARITY)

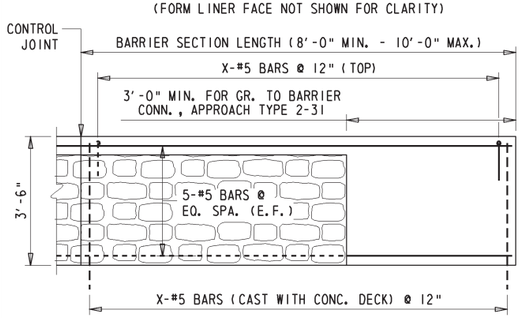

TYPICAL END BARRIER

(IN SOME CASES, GR. TO BARRIER CONN., APPROACH TYPE 2-31 MAY BE ATTACHED DIRECTLY ON FORM LINER)

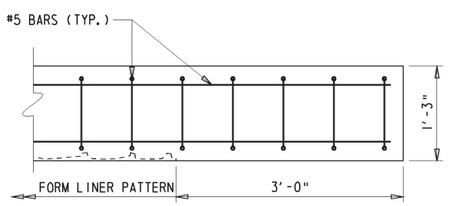

TYPICAL END BARRIER (PLAN VIEW)

(IN SOME CASES, GR. TO BARRIER CONN., APPROACH TYPE 2-31 MAY BE ATTACHED DIRECTLY ON FORM LINER)

TL-4

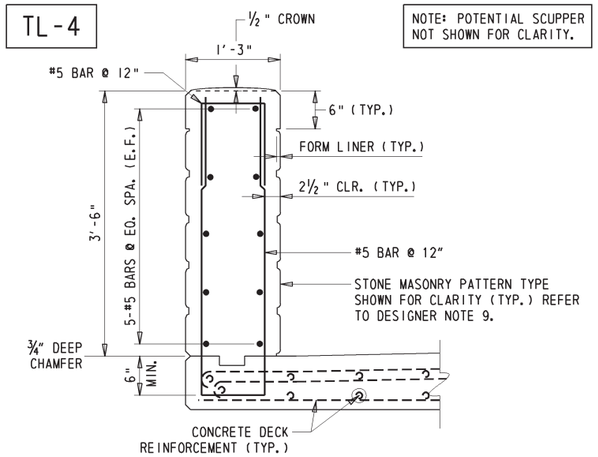

NOTE: POTENTIAL SCUPPER NOT SHOWN FOR CLARITY.

3'-6" FORM-LINER BARRIER SECTION

(EXAMPLE: 2-SIDED FORM-LINER BARRIER ATOP 8½" CONCRETE DECK)

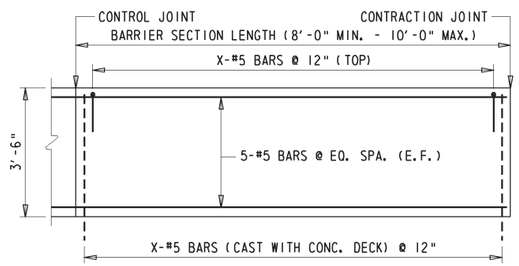

TYPICAL INTERIOR BARRIER

(FORM LINER FACE NOT SHOWN FOR CLARITY)

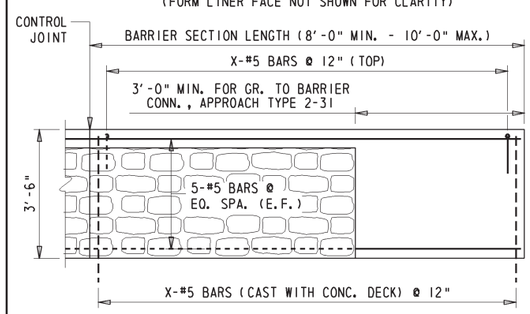

TYPICAL END BARRIER

(IN SOME CASES, GR. TO BARRIER CONN., APPROACH TYPE 2-31 MAY BE ATTACHED DIRECTLY ON FORM LINER)

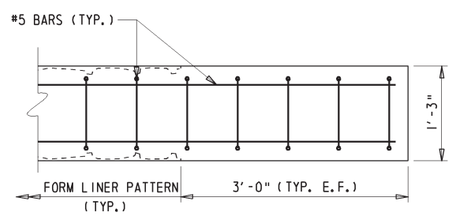

TYPICAL END BARRIER (PLAN VIEW)

(IN SOME CASES, GR. TO BARRIER CONN., APPROACH TYPE 2-31 MAY BE ATTACHED DIRECTLY ON FORM LINER)

DESIGNER NOTES

1. REFER TO SECTION 106.5 - 'BRIDGE BARRIERS AND RAILINGS' FOR MORE INFORMATION.
2. 3'-0" VERTICAL FACE BARRIERS ARE THE PREFERRED BARRIERS FOR BRIDGE PROJECTS REQUIRING MINIMUM USE OF TL-3 BARRIERS. THESE BARRIERS ARE TYPICALLY USED AT PROJECTS ON LOCAL ROADS UTILIZING BOX CULVERTS, RIGID FRAMES, AND ADJACENT BOX BEAMS.
3. 3'-0" F-SHAPE BARRIERS MEET TL-4 REQUIREMENTS. THIS BARRIER IS TYPICALLY USED AT BRIDGE PROJECTS ON ARTERIAL AND COLLECTOR ROADS WHERE USE OF 3'-0" VERTICAL FACE BARRIERS ARE NOT SUITABLE, AND WHEN BARRIERS AS DESCRIBED IN DESIGNER NOTES 4 AND 5 ARE NOT REQUIRED.
4. 3'-6" F-SHAPE BARRIERS ARE THE PREFERRED BARRIERS FOR BRIDGE PROJECTS REQUIRING MINIMUM USE OF TL-5 BARRIERS ON FREEWAYS, EXPRESSWAYS, AND OVERPASSES OVER ROADWAY/RAILROAD.
5. 4'-2" F-SHAPE BARRIERS SHOULD BE USED IN LIEU OF 3'-6" F-SHAPE BARRIERS IN CASES WHERE THE GLARE FROM OPPOSITE TRAFFIC IS A CONCERN. IT CAN BE PLACED AS AN EXTERIOR OR MEDIAN BARRIER.
6. 4'-6" F-SHAPE BARRIERS ARE THE PREFERRED BARRIERS FOR PROTECTION OF MEDIAN GAP OF PARALLEL STRUCTURES WITH GAPS OF 6 INCHES TO 12 FEET WIDE. REFER TO SECTION 103.3.3 FOR MORE INFORMATION.
7. 2'-3" PARAPETS (SHEET 2) ARE REQUIRED ALONG WITH 1'-9" PEDESTRIAN METAL RAILING (SHEET 4) MOUNTED ATOP THE PARAPET AS EXTERIOR PROTECTION WHERE THERE ARE SIDEWALK OR SHARED-USER PATHS PRESENT ON THE BRIDGE. THIS SYSTEM IS TYPICALLY USED ON BRIDGE OVERPASSES (TO PREVENT DEBRIS FROM FALLING DOWN TO THE TRAFFIC BELOW) OR BRIDGES WITH LOW VOLUME ADT (IF A CURB IS PROVIDED IN FRONT OF THE PARAPET). IN ADDITION, FOR ROADWAYS WITH HIGH VOLUME ADT, THESE PARAPETS SHOULD ONLY BE USED IF THERE IS A CRASH-TESTED BARRIER BETWEEN THE TRAVEL WAY AND SIDEWALK/SHARED-USER PATHS. THE DESIGNER MAY CONSIDER ALTERNATIVE PARAPET/RAILING SYSTEMS ON ROADWAYS WITH HIGH VOLUME ADT IF THE PARAPET IS EXPOSED TO TRAFFIC WITH APPROVAL OF THE BRIDGE DESIGN ENGINEER.
8. 4'-0" PEDESTRIAN RAILINGS (SHEETS 5 AND 6) ARE REQUIRED AS EXTERIOR PROTECTION WHERE THERE ARE SIDEWALK OR SHARED-USER PATHS ON THE BRIDGE. THIS SYSTEM IS TYPICALLY USED ON BRIDGES OVER WATERWAY.
9. 3'-6" FORM-LINER BARRIERS ARE TYPICALLY USED TO MEET AESTHETICS REQUIREMENTS. THIS TYPE OF BARRIER IS TYPICALLY USED IN NEW CASTLE COUNTY, BUT MAY BE USED IN KENT AND SUSSEX COUNTIES IF WARRANTED. THE DESIGNER SHOULD SPECIFY ON THE PLANS THE TYPE, FINISH, AND COLOR OF THE FORM-LINER SURFACE. USE OF ANY FORM-LINER PATTERNS OTHER THAN STONE MASONRY PATTERN MUST BE APPROVED BY THE BRIDGE DESIGN ENGINEER.
10. BARRIER CONTROL JOINTS SHOULD BE USED WHERE THE LONGITUDINAL BARRIER REINFORCEMENT IS CONTINUOUS THROUGH THE JOINT.
11. BARRIER CONTRACTION JOINT SHOULD BE USED WHERE THE LONGITUDINAL BARRIER REINFORCEMENT TERMINATES AT THE JOINT.
12. THE LONGITUDINAL BARRIER REINFORCEMENT SHOULD BE CONTINUOUS BETWEEN MINIMUM OF TWO, AND MAXIMUM OF THREE BARRIER SECTIONS.
13. 'TYPICAL END BARRIER' SECTIONS AS SHOWN ON SHEETS 1 TO 3 ASSUMES BARRIER CONNECTION, APPROACH TYPES 1-31 OR 2-31 WILL BE ATTACHED TO THE END BARRIERS. IF THERE ARE NO CURRENT PLANS TO ATTACH THE APPROACH GUARDRAILS TO THE BARRIER, THE DESIGNER STILL SHOULD TAPER THE END BARRIERS IN AN EVENT THE GUARDRAIL WILL BE ATTACHED TO THE END BARRIER IN THE FUTURE.
14. BARRIER SECTIONS LENGTHS MUST BE MINIMUM OF 8'-0" AND MAXIMUM OF 10'-0". FOR SHORT SPANS (TYPICALLY BOX CULVERTS OR RIGID FRAMES), THE DESIGNER SHOULD CONSIDER USING GUARDRAIL OVER CULVERTS IF APPLICABLE, OR IF ONLY ONE OR TWO SECTIONS OF BARRIERS ARE REQUIRED ON EACH SIDE OF THE BRIDGE, THE 10'-0" MAXIMUM SECTION LENGTH REQUIREMENT MAY BE EXTENDED TO MAXIMUM SECTION LENGTH OF 11'-6".
15. 32" TALL BARRIERS ARE NO LONGER PERMITTED FOR USE ON DELDOT PROJECTS. ANY CONSIDERATIONS FOR USE OF 32" TALL BARRIERS MUST BE APPROVED BY THE BRIDGE DESIGN ENGINEER.

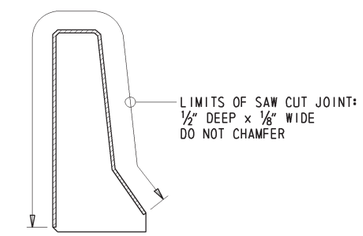

SECTION F-F

EXAMPLE SHOWN USING F-SHAPE BARRIER.
REINFORCEMENT NOT SHOWN FOR CLARITY.

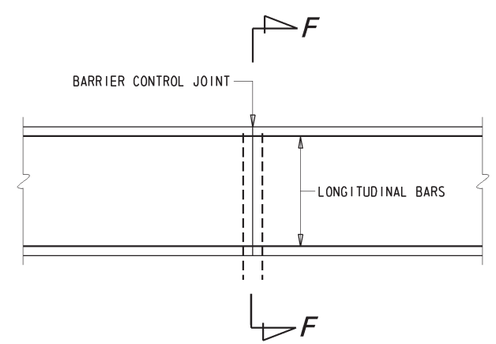

BARRIER CONTROL JOINT DETAIL (ELEVATION)

(REINFORCEMENT CONTINUOUS THROUGH JOINT)

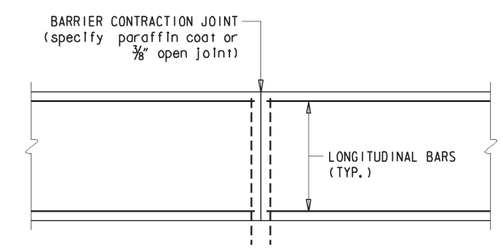

BARRIER CONTRACTION JOINT DETAIL

(REINFORCEMENT NOT CONTINUOUS THROUGH JOINT)

NOTE: USE OF PARAFFIN COAT AT THE JOINT OR A ⅜" OPEN JOINT IS PERMITTED. BARRIER EXPANSION JOINT DETAIL SIMILAR TO BARRIER CONTRACTION JOINT DETAIL WITH OPENING TYPICALLY GREATER THAN 2 INCHES. REFER TO DETAIL NO. 340.01 FOR MORE INFORMATION.

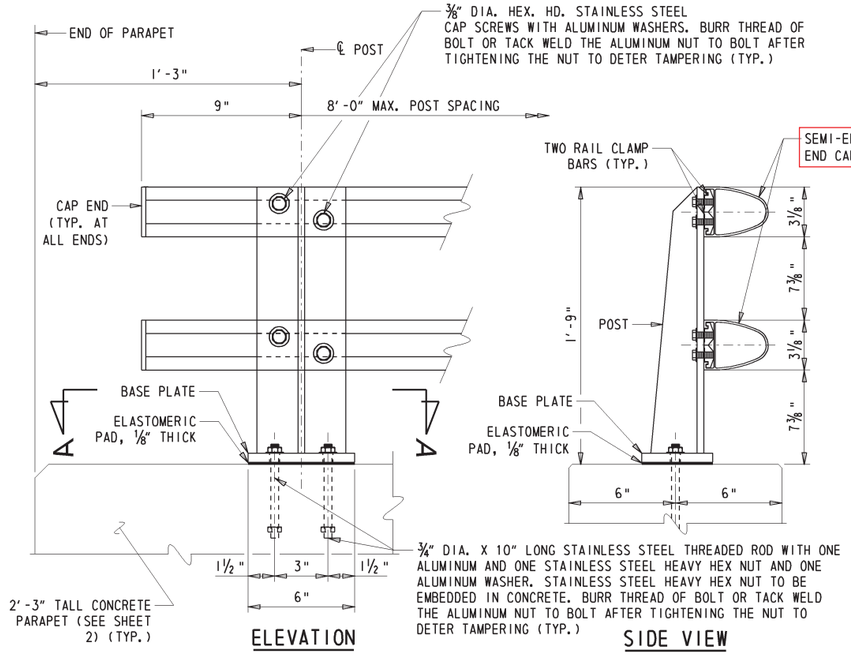

ELEVATION

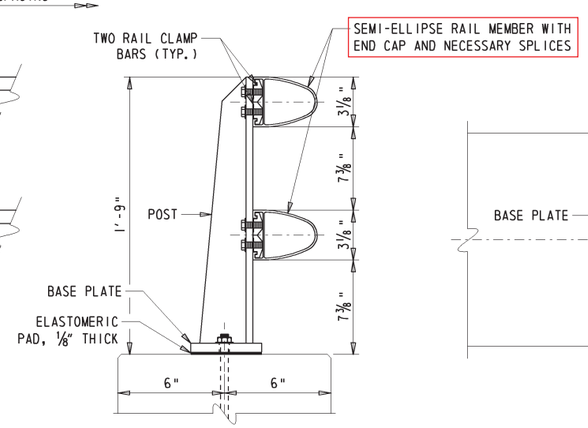

SIDE VIEW

METAL BRIDGE RAILING

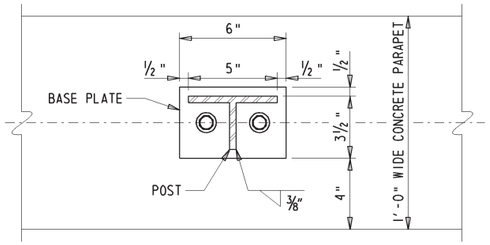

SECTION A-A

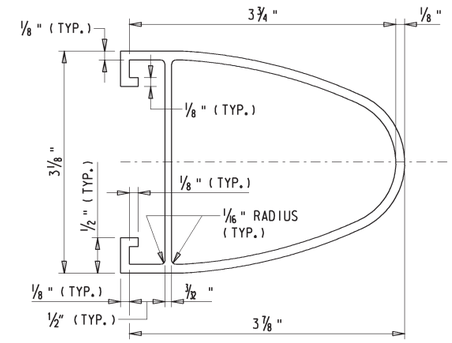

SEMI-ELLIPTICAL RAIL

GENERAL METAL RAILING NOTES

1. POSTS SHALL BE SET PERPENDICULAR TO GRADE.
2. ℄ POST MUST BE LOCATED A MINIMUM OF 6" FROM CONTROL JOINTS AND A MINIMUM OF 12" FROM EXPANSION OR CONTRACTION JOINTS.
3. RAILS SHALL BE CONTINUOUS WITH SPLICES WHERE RAIL SECTIONS CROSS EXPANSION JOINTS.
4. THE CENTERLINE OF ANY SPLICE SHALL BE LOCATED AT LEAST 2'-0" AWAY FROM CENTERLINE OF A POST.
5. SET NUTS 1/4" CLEAR MINIMUM OF PLATES AND BURR THREADS ABOVE NUTS.
6. THE METAL RAILING DETAILS SHALL BE PLACED ALONG ENTIRE LENGTH OF 2'-3" TALL CONCRETE PARAPET (list any exceptions here).
7. FABRICATION AND INSTALLATION OF THE ALUMINUM RAILING SYSTEM WILL BE INCIDENTAL TO ITEM 626011 - ALUMINUM RAILING, TYPE 1.

MATERIAL NOTES

1. POSTS, RAILS, SPLICE SLEEVES, CLAMP BARS, AND ALUMINUM HEX NUTS MUST MEET REQUIREMENTS OF ASTM B-221 ALLOY 6061-T6.
2. BASE PLATES MUST MEET REQUIREMENTS OF ASTM B209 ALLOY 6061-T6.
3. END CAPS MUST MEET REQUIREMENTS OF ASTM B26 ALLOY 356-F.
4. ELASTOMERIC PADS MUST MEET REQUIREMENTS OF 60 +/- SHORE A DUROMETER.
5. STAINLESS STEEL HEX NUTS MUST MEET REQUIREMENTS OF ASTM A-307, GRADE A.
6. ANCHOR BOLTS MUST MEET REQUIREMENTS OF ASTM A-276 TYPE 430 (THREADS TO BE ROLLED NOT CUT).
7. STAINLESS STEEL HEX HEAD CAP SCREWS (CLAMPS) MUST MEET REQUIREMENTS OF ASTM A-193, GRADE B-8.
8. ALUMINUM WASHERS MUST MEET REQUIREMENTS OF ASTM B-209 ALLOY ALCLAD 2024-T4.

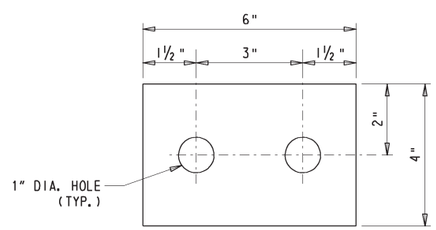

BASE PLATE

NOTE: BASE PLATE 1/2" THICK. THE 1/8" THICK ELASTOMERIC PAD WILL HAVE IDENTICAL DIMENSIONS AS BASE PLATE WITH 1" DIA x 1 1/2" SLOTS.

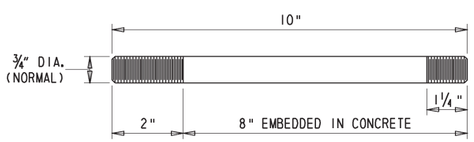

ANCHOR BOLT

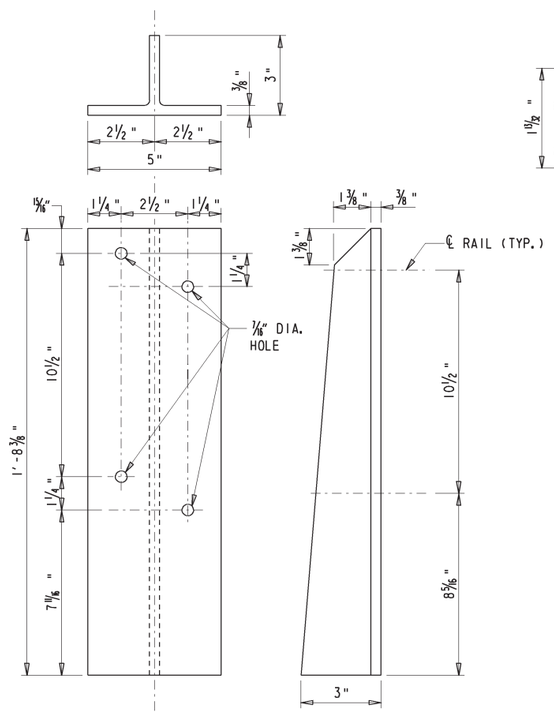

POST

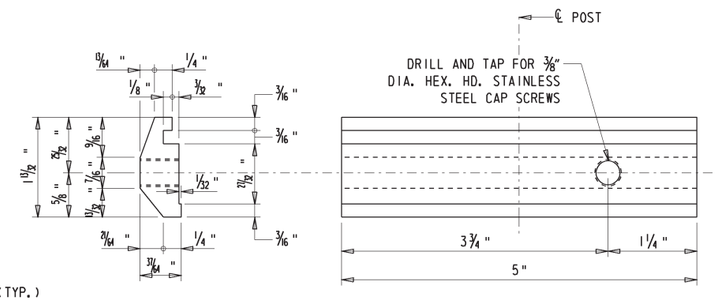

RAIL CLAMP BAR

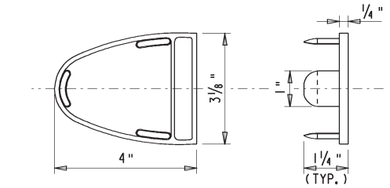

END CAP

NOTE: CAPS SHALL BE SPOT WELDED TO RAILS WITH WELDS GROUND SMOOTH (3 WELDS REQUIRED FOR EACH CAP)

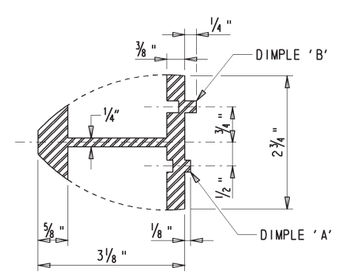

SECTION B-B

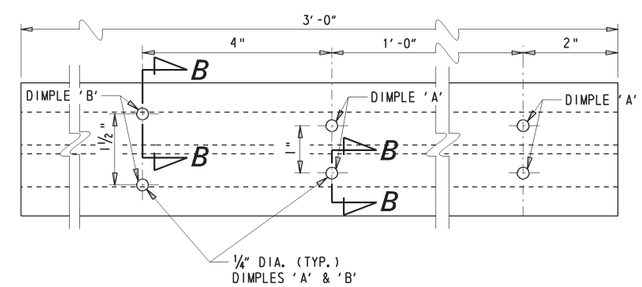

SLEEVE

DELAWARE DEPARTMENT OF TRANSPORTATION BRIDGE DESIGN MANUAL	BRIDGE RAILING DETAILS	NOT TO SCALE	ISSUE DATE 10/01/2015 10/01/2016	DETAIL No. 325.02 SHEET No. 4 of 6

NOTE: MAINTAIN UNIFORM NORMAL POST SPACING WHEN POSSIBLE.

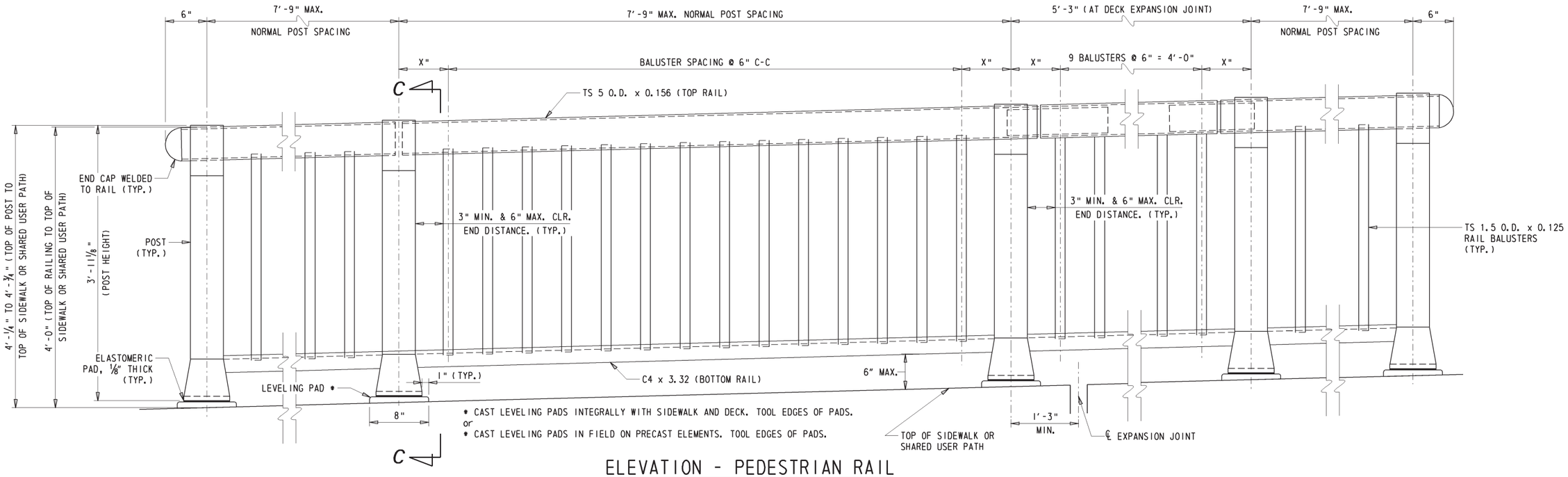

ELEVATION - PEDESTRIAN RAIL

NOTE: NOT FOR USE ADJACENT TO VEHICULAR TRAFFIC.

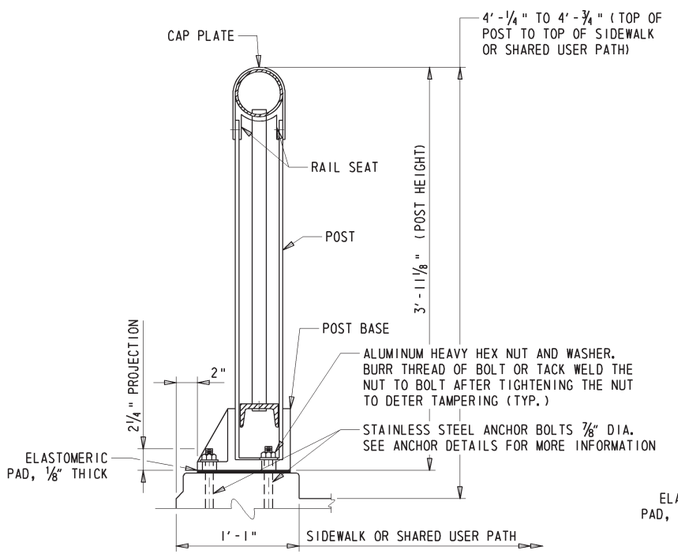

SECTION C-C

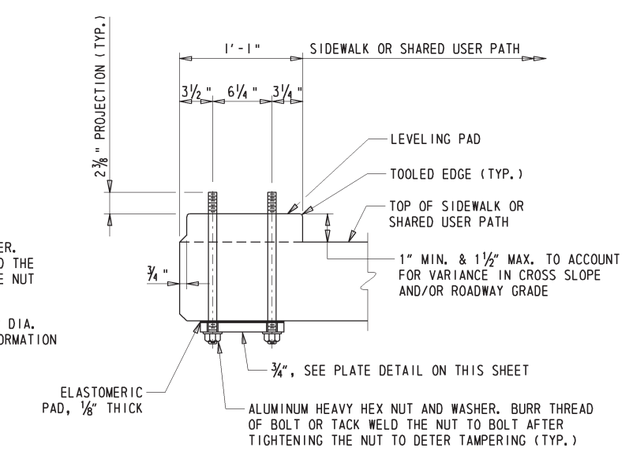

ANCHOR DETAIL FOR RAILING MOUNTED ONTO CONCRETE DECK

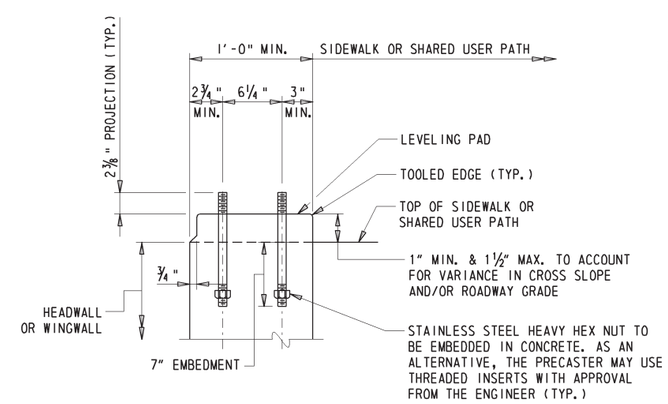

ANCHOR DETAIL FOR RAILING MOUNTED ONTO CONCRETE HEADWALL OR WINGWALL

NOTE: FOR ANCHOR DETAIL, THE CONTRACTOR HAS THE OPTION TO PROPOSE FIELD DRILLING AND INSTALLING MANUFACTURED ANCHORS OR MECHANICAL FASTENERS CAPABLE OF DEVELOPING THE FULL STRENGTH OF THE BOLT WITH APPROVAL OF THE ENGINEER.

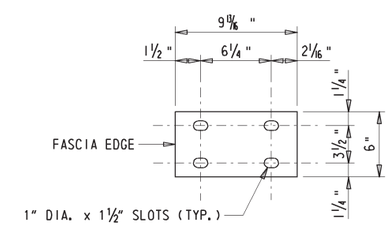

ELASTOMERIC PAD DETAIL
1/8" THICK

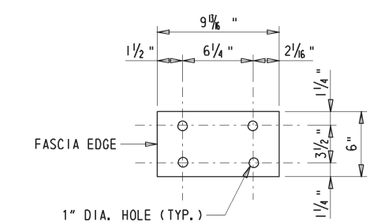

PLATE DETAIL
3/4" THICK

DELAWARE DEPARTMENT OF TRANSPORTATION **BRIDGE DESIGN MANUAL**	BRIDGE RAILING DETAILS	NOT TO SCALE	ISSUE DATE 10/01/2015	DETAIL No. 325.02 SHEET No. 5 of 6

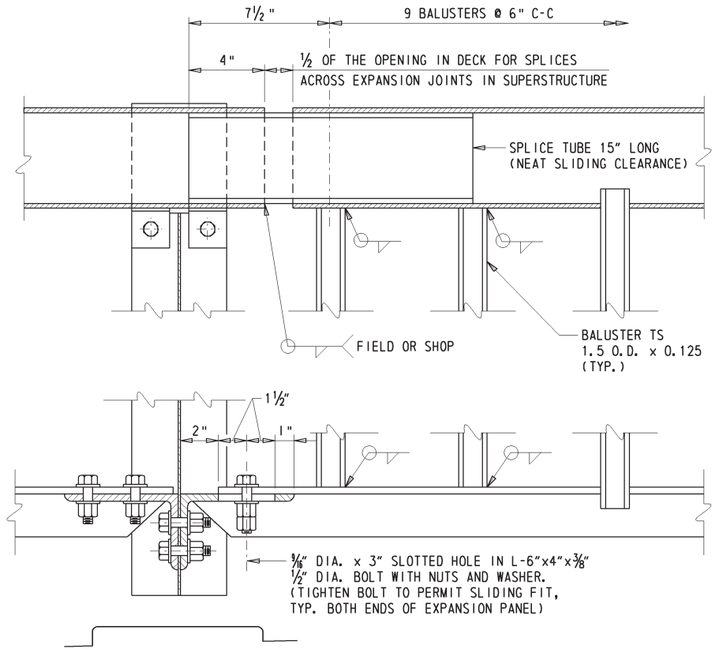

TYPICAL EXPANSION PANEL DETAIL

NOTE: POST BASE NOT SHOWN FOR CLARITY.

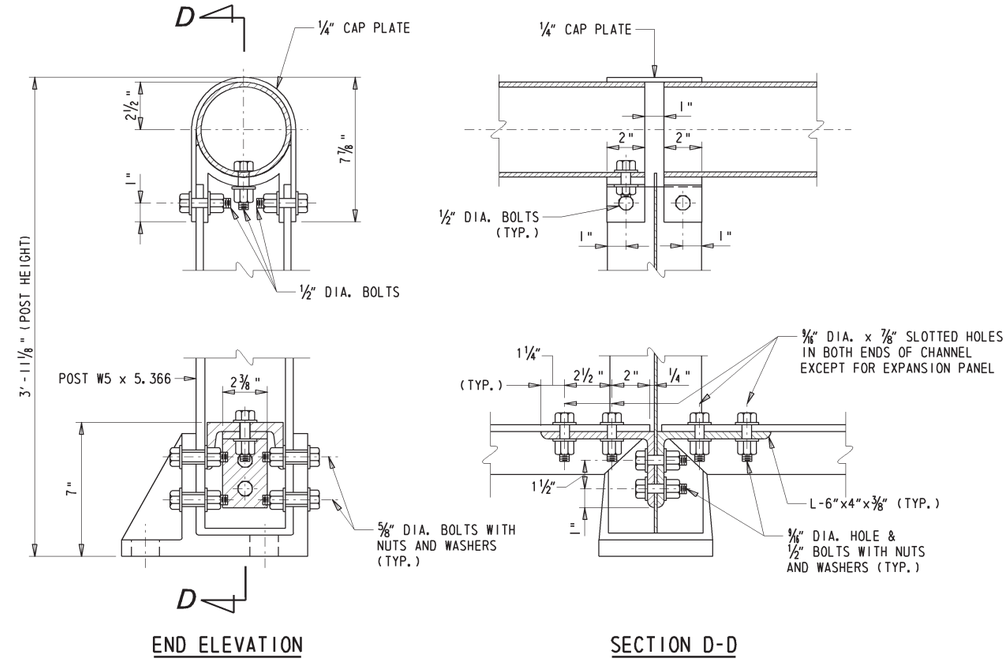

END ELEVATION

SECTION D-D

TYPICAL DETAIL AT POST

GENERAL PEDESTRIAN RAILING NOTES

1. PLACE POSTS, BALUSTERS, AND ANCHOR BOLTS TRULY VERTICAL. PLACE RAILS PARALLEL TO GRADE.
2. PLACE END CAPS FLUSH WITH RAILS.
3. DO NOT PAINT ANY MATERIALS.
4. PROVIDE UNIFORM SPACING OF BALUSTERS IN EACH PANEL. IF POST SPACING SHOWN ON SHEETS 5 AND 6 DOES NOT RESULT IN 6" SPACING FOR THE BALUSTERS, ADJUST THE DIFFERENCE BY INCREASING OR DECREASING BALUSTER SPACING BY NOT MORE THAN ¼". WHEN REQUIRED, ADJUST END CLEAR SPACING BETWEEN POST TO ADJACENT BALUSTER FROM 3" MIN. TO 6" MAX.
5. SIMILAR ALUMINUM RAILING SYSTEM MAY BE SUBSTITUTED FOR THE SPECIFIED RAILING SYSTEM WITH APPROVAL OF THE ENGINEER.
6. FABRICATION AND INSTALLATION OF THE ALUMINUM RAILING SYSTEM WILL BE INCIDENTAL TO ITEM 626010 - ALUMINUM PEDESTRIAN RAILING.

MATERIAL NOTES

1. MATERIALS FOR ALUMINUM RAILING SYSTEM AND NUTS MUST MEET REQUIREMENTS OF ASTM B-221 ALLOY 6061-T6.
2. ELASTOMERIC PADS MUST MEET REQUIREMENTS OF 60 +/- SHORE A DUROMETER.
3. STAINLESS STEEL HEX NUTS MUST MEET REQUIREMENTS OF ASTM A-307, GRADE A.
4. BOLTS MUST MEET REQUIREMENTS OF ASTM B-211, ALUMINUM ALLOY 2024-T4.
5. ANCHOR BOLTS MUST MEET REQUIREMENTS OF ASTM A-276 TYPE 430 (THREADS TO BE ROLLED NOT CUT).
6. ALUMINUM WASHERS MUST MEET REQUIREMENTS OF ASTM B-209 ALLOY ALCLAD 2024-T4.

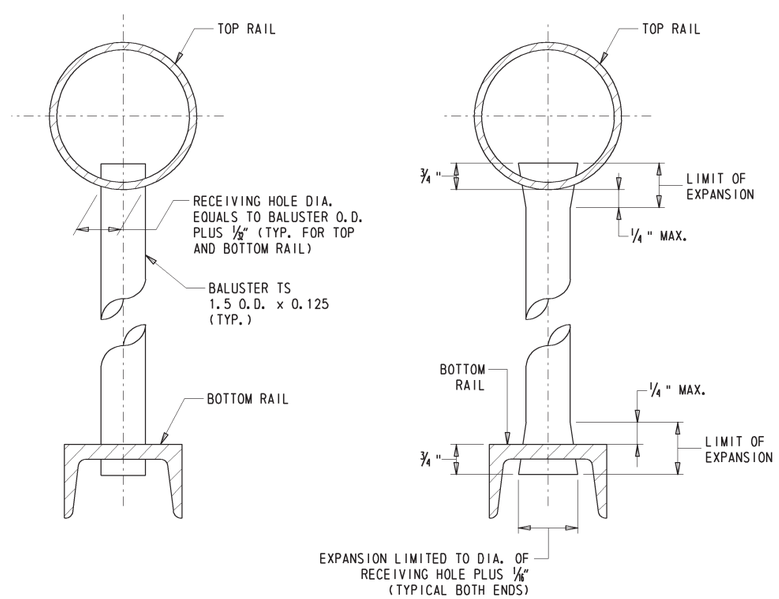

PRIOR TO EXPANDING

EXPANDED

BALUSTER DETAILS

EXPAND FULL CIRCUMFERENCE OF BALUSTER WITHIN THE LIMIT OF EXPANSION.

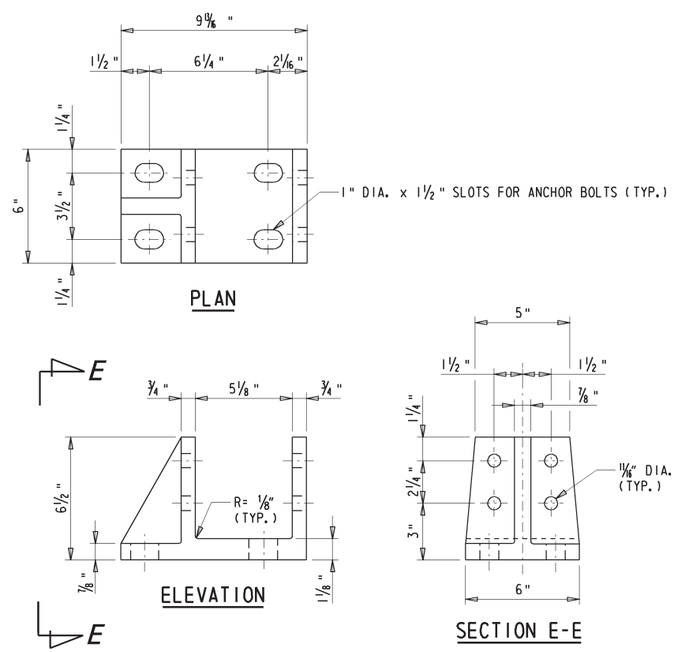

PLAN

ELEVATION

SECTION E-E

POLE BASE DETAIL

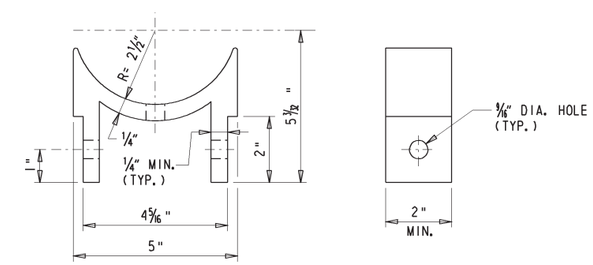

ELEVATION

END VIEW

RAIL SEAT DETAIL

NOTE: THE PLACEMENT OF #5 STIRRUP BARS IN THE TRANSVERSE DIRECTION MUST AVOID CONFLICTING WITH #5 STIRRUP BARS IN THE LONGITUDINAL DIRECTION.

NOTE: ABUTMENT AND SLEEPER SLAB DETAILS NOT SHOWN FOR CLARITY.

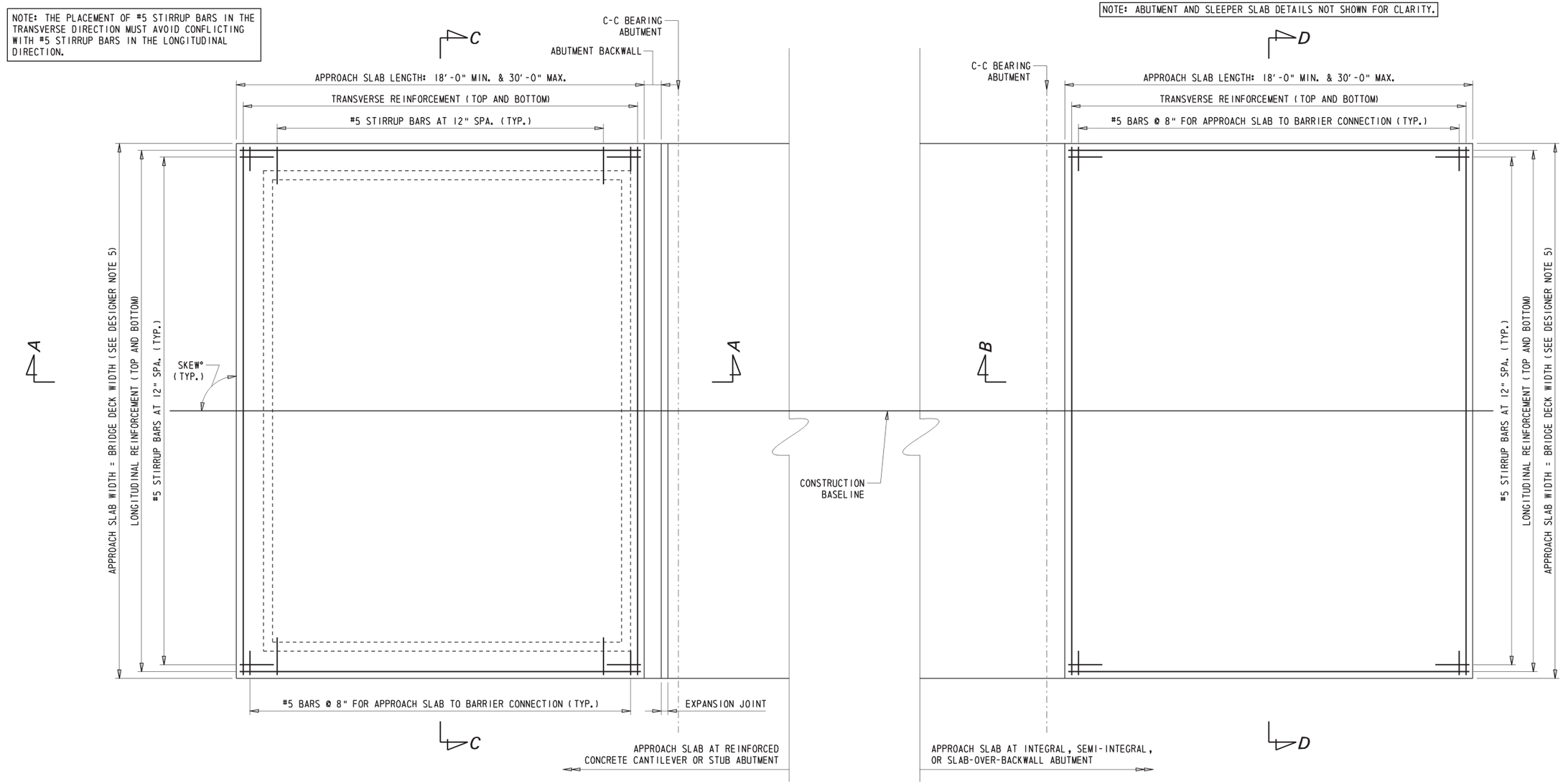

PLAN

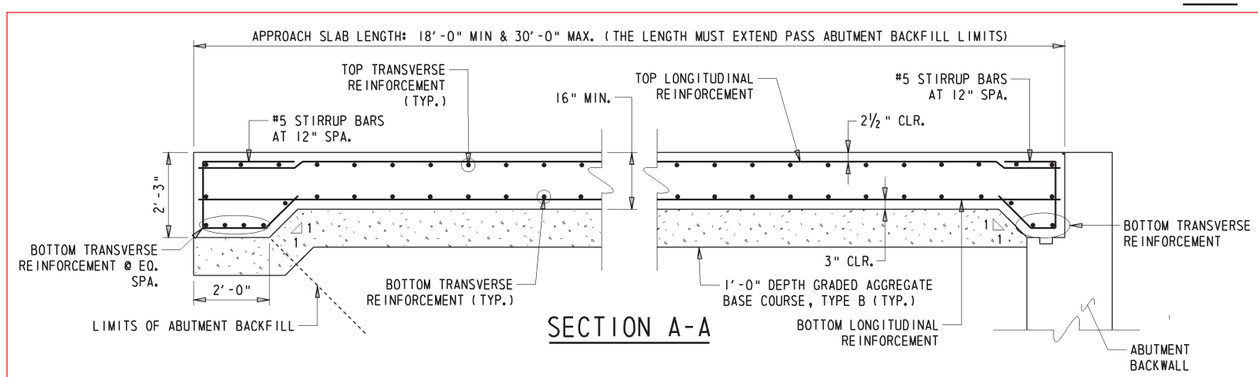

SECTION A-A

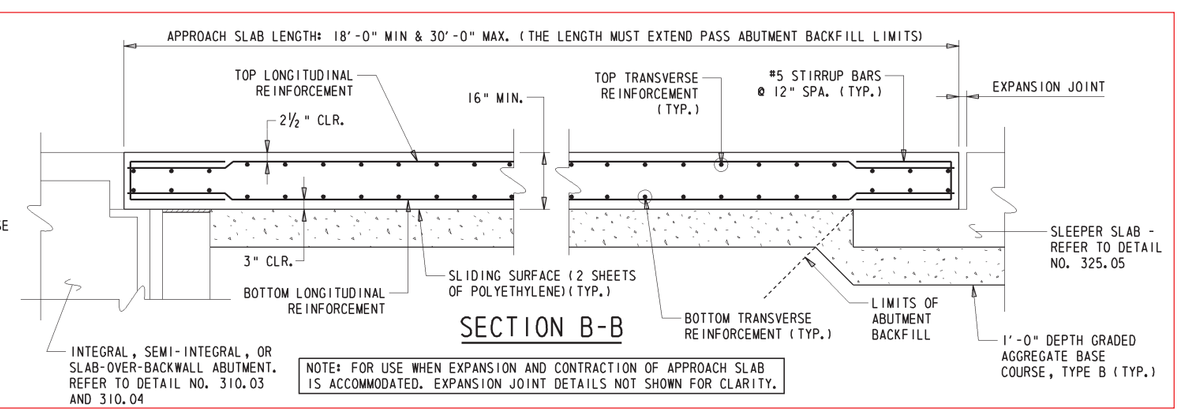

SECTION B-B

NOTE: FOR USE WHEN EXPANSION AND CONTRACTION OF APPROACH SLAB IS ACCOMMODATED. EXPANSION JOINT DETAILS NOT SHOWN FOR CLARITY.

DELAWARE DEPARTMENT OF TRANSPORTATION **BRIDGE DESIGN MANUAL**	APPROACH SLAB DETAILS	NOT TO SCALE	ISSUE DATE 10/01/2015 10/01/2016	DETAIL No. 325.03 SHEET No. 1 of 2

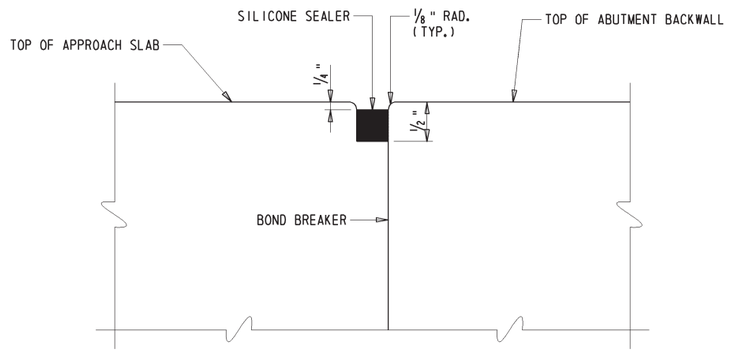

JOINT BETWEEN APPROACH SLAB AND CANTILEVER OR STUB ABUTMENT BACKWALL

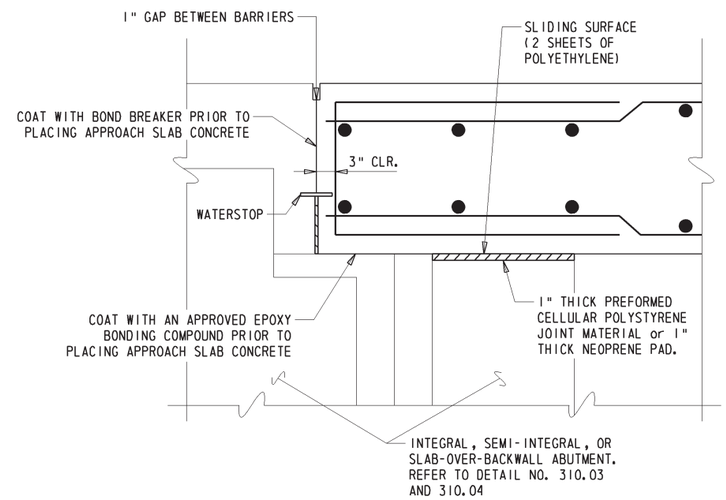

JOINT BETWEEN APPROACH SLAB AND INTEGRAL, SEMI-INTEGRAL OR SLAB-OVER-BACKWALL ABUTMENT

NOTE: REINFORCEMENT PROTRUDING FROM END CONCRETE DECK DIAPHRAGM INTO APPROACH SLAB NOT SHOWN FOR CLARITY. THE EXAMPLE USED IS A SEMI-INTEGRAL ABUTMENT WITH A BACKWALL. OTHER OPTIONS INCLUDE HAVING THE APPROACH SLAB REST ON THE END DIAPHRAGM NOTCH.

DESIGNER NOTES

1. REFER TO SECTIONS 103.3.7, 103.6.2(6), AND 106.7 FOR MORE INFORMATION ON APPROACH SLAB DESIGN.
2. THE APPROACH SLAB DETAILS AS SHOWN AT REINFORCED CONCRETE CANTILEVER OR STUB ABUTMENT UTILIZES LONGITUDINAL EDGE BEAMS. HOWEVER THIS IS NOT REQUIRED FOR ALL PROJECTS. THE NEED FOR LONGITUDINAL EDGE BEAMS WILL BE EVALUATED BY THE DESIGNER ON A CASE-BY-CASE BASIS.
3. SUPPORT AT THE ROADWAY END FOR APPROACH SLAB AT INTEGRAL, SEMI-INTEGRAL, OR SLAB-OVER-BACKWALL ABUTMENTS SHALL BE PROVIDED BY SLEEPER SLAB TO REMOVE OR MINIMIZE THE NUMBER OF EXPANSION JOINTS AT THE BRIDGE. REFER TO DETAIL NO. 325.05 - SLEEPER SLAB DETAILS.
4. THE PREFERRED EXPANSION JOINT TYPE BETWEEN THE ROADWAY END OF THE APPROACH SLAB AND SLEEPER SLAB IS STRIP SEAL EXPANSION JOINT. REFER TO DETAIL NO. 340.01 - STRIP SEAL EXPANSION JOINT DETAILS.
5. IT IS DELDOT'S PREFERENCE TO HAVE THE APPROACH SLAB WIDTH EQUAL TO THE BRIDGE DECK WIDTH. HOWEVER, EXCEPTIONS MAY BE MADE FOR REDUCTION IN APPROACH SLAB WIDTH TO ACCOMMODATE GUARDRAIL POST PLACEMENTS.
6. UNDER SECTION A-A OR B-B VIEWS, THE EXAMPLE ASSUMES A ZERO PERCENT ROADWAY GRADE. IF THE GRADE IS ABOVE ZERO PERCENT, THE DETAILS SHOULD BE SHOWN AS SLOPED WITH THE SLOPE GRADE VALUE LISTED.
7. BREAK POINTS SHOULD BE CALLED OUT AND SHOWN IN SECTION C-C OR D-D VIEWS IN THE PLANS. IF POSSIBLE, ANY SUPERELEVATION TRANSITIONS SHOULD BE COMPLETED OUTSIDE THE LIMITS OF THE BRIDGE, INCLUDING THE LIMITS OF APPROACH SLAB. HENCE THE BREAK POINT LOCATIONS AND CROSS SLOPE VALUES AT THE BRIDGE SHOULD MIRROR THOSE AT APPROACH SLAB.
8. IN CASES WHERE P.C.C. PAVEMENT TIES IN WITH THE END OF APPROACH SLAB, THE DESIGNER SHOULD CONSIDER PROVIDING EXPANSION MATERIAL (ASPHALT PLUG JOINT, 6" TO 12" ASPHALT STRIP, ETC.) BETWEEN THE APPROACH SLAB AND P.C.C. PAVEMENT.

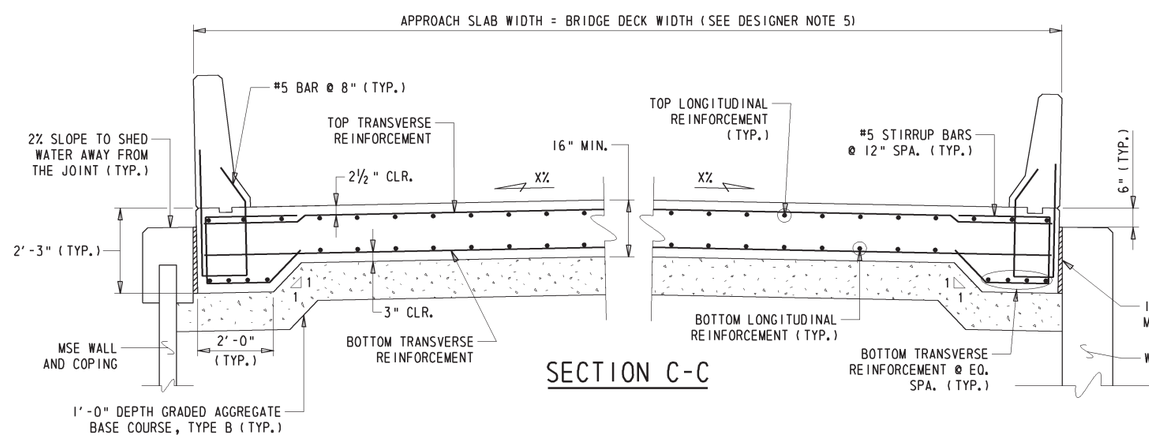

SECTION C-C

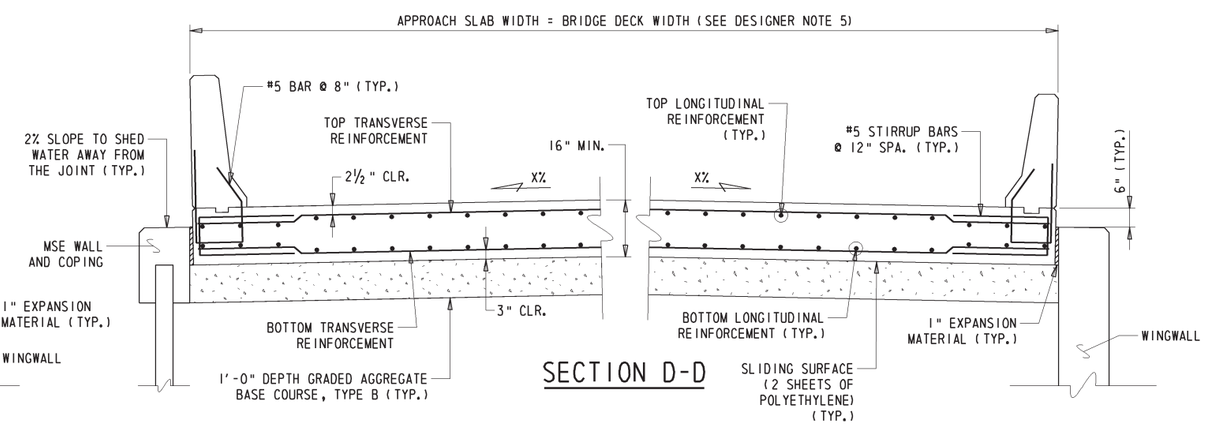

SECTION D-D

DELAWARE DEPARTMENT OF TRANSPORTATION **BRIDGE DESIGN MANUAL**	APPROACH SLAB DETAILS	NOT TO SCALE	ISSUE DATE 10/01/2015 10/01/2016	DETAIL No. 325.03 SHEET No. 2 of 2

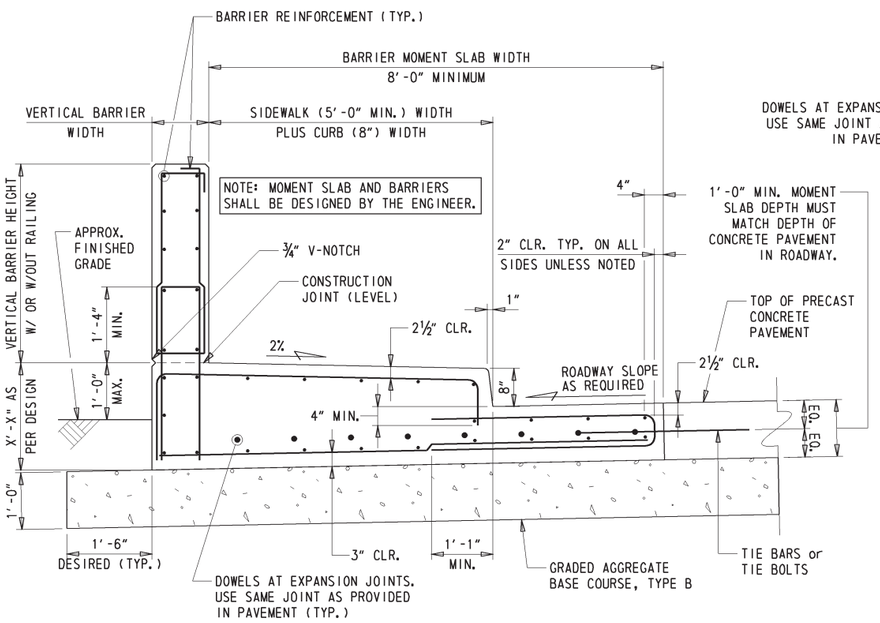

MOMENT SLAB WITH ALTERNATE SIDEWALK AND VERTICAL C.I.P. WALL BARRIER (P.C.C. PAVEMENT)

NOTE: MOMENT SLAB AND BARRIERS SHALL BE DESIGNED BY THE ENGINEER.

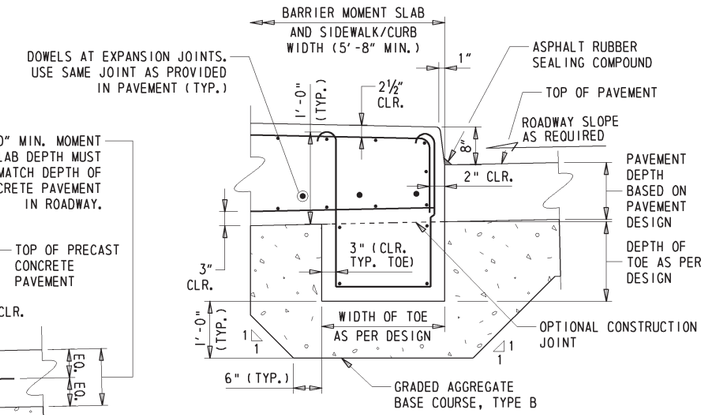

MOMENT SLAB WITH ALTERNATE SIDEWALK AND VERTICAL C.I.P. WALL BARRIER (HALF-SECTION FOR BITUMINOUS CONCRETE)

NOTE: THE DESIGNER MAY CONSIDER INCREASING THE DEPTH OF THE MOMENT SLAB IN LIEU OF USING TOE.

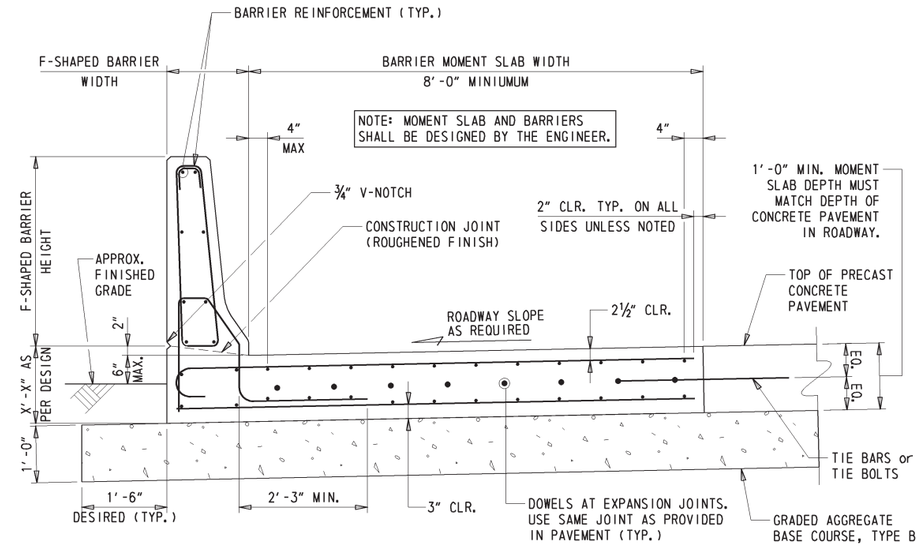

MOMENT SLAB WITH P.C.C. PAVEMENT (AT-GRADE) WITH TYPICAL C.I.P. BARRIER

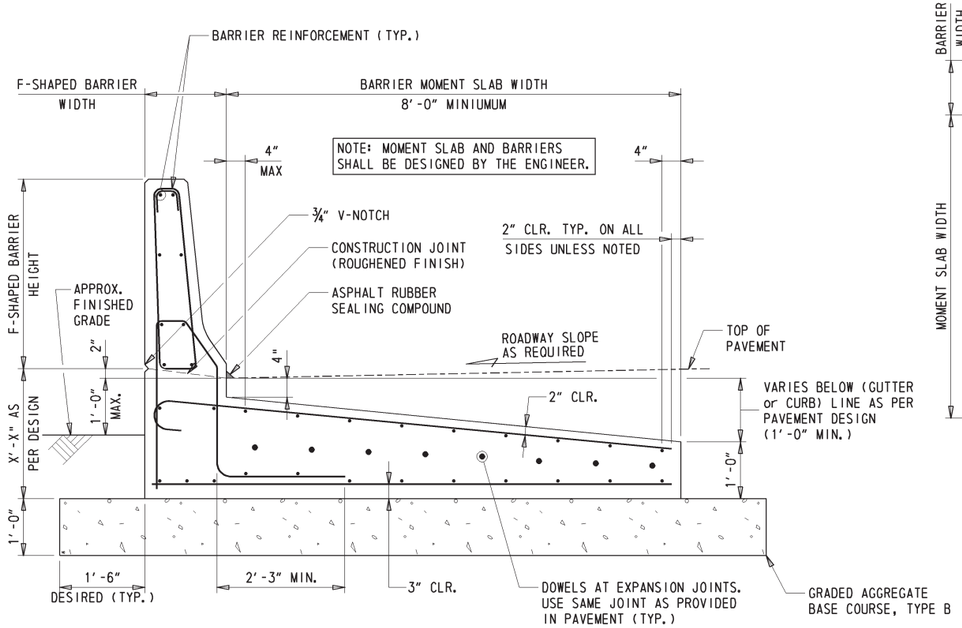

MOMENT SLAB WITH BITUMINOUS CONCRETE (BURIED) WITH TYPICAL C.I.P. BARRIER

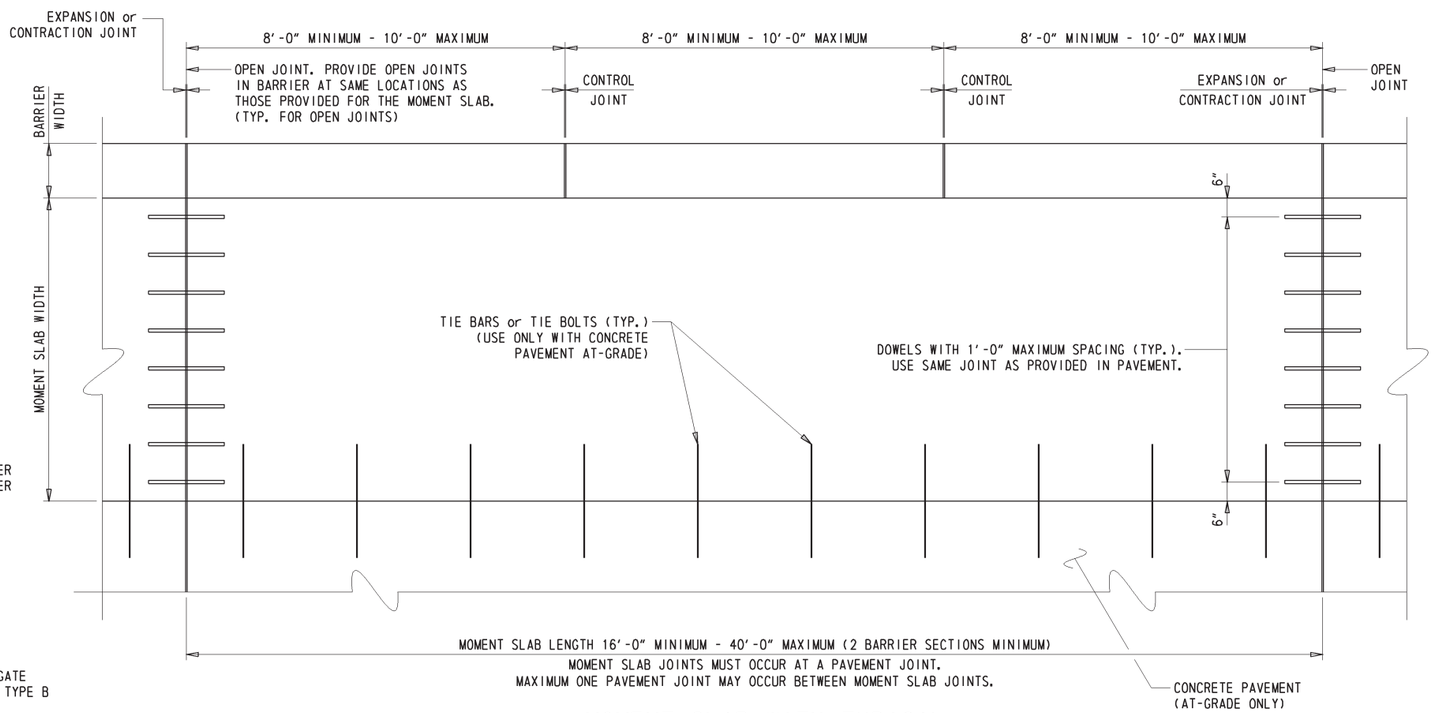

MOMENT SLAB WITH TYPICAL C.I.P. BARRIER PLAN

NOTE: MOMENT SLAB REINFORCEMENT NOT SHOWN FOR CLARITY, BUT MUST BE SHOWN ON THE PLANS. LONGITUDINAL BARRIER REINFORCEMENT MUST BE CONTINUOUS THROUGH BARRIER SECTIONS THROUGHOUT THE ENTIRE MOMENT SLAB LENGTH.

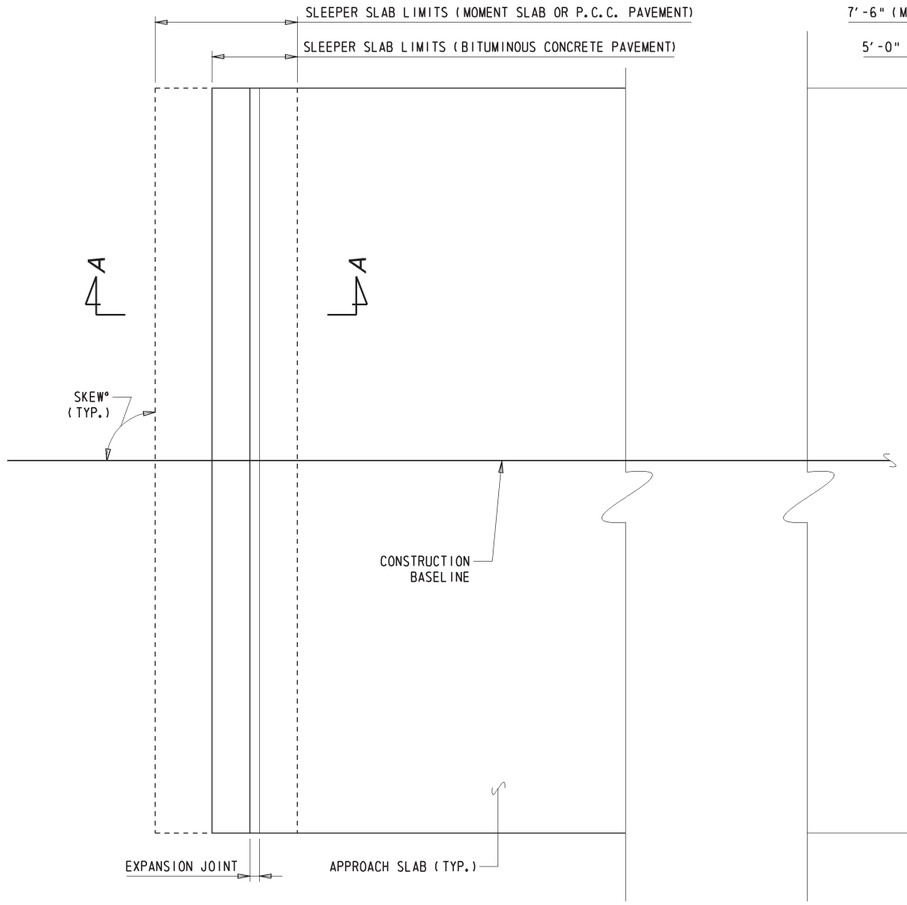

SLEEPER SLAB PLAN

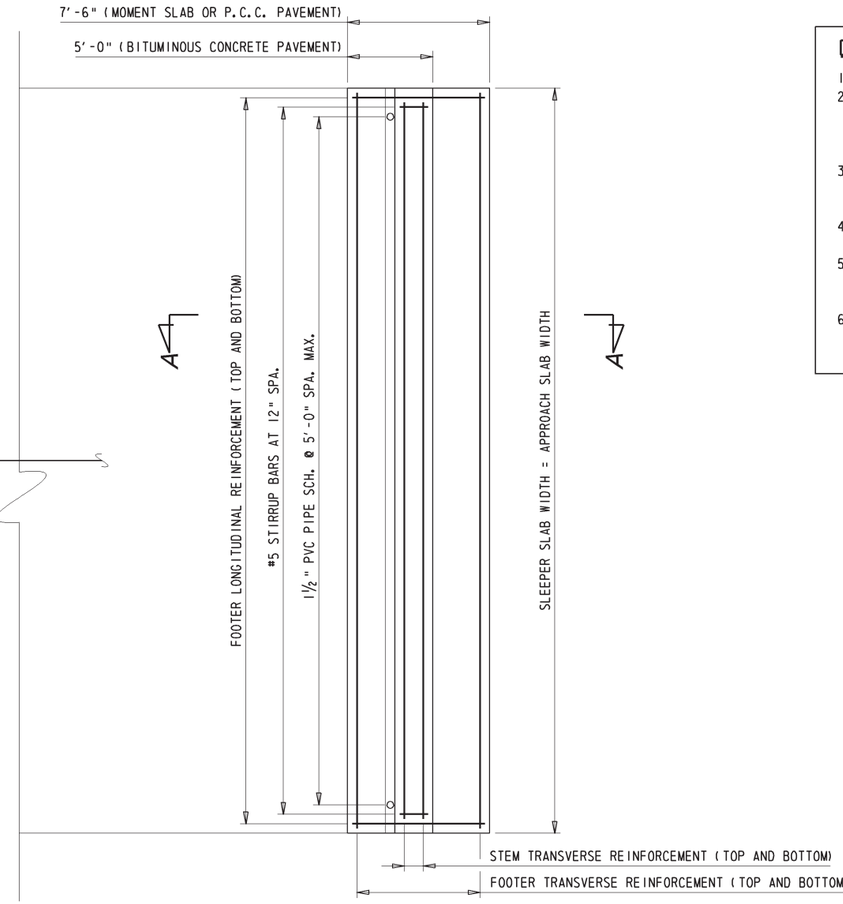

SLEEPER SLAB REINFORCEMENT PLAN

DESIGNER NOTES

1. REFER TO SECTION 106.7.1 FOR MORE INFORMATION ON SLEEPER SLAB DESIGN.
2. SLEEPER SLABS SHALL BE REQUIRED FOR ALL PROJECTS THAT UTILIZE INTEGRAL, SEMI-INTEGRAL, AND DECK SLAB POUROVER ABUTMENTS WHERE THE DECK JOINT IS PROVIDED AT THE ROADWAY END OF THE APPROACH SLAB. REFER TO DETAIL NO. 325.03 - APPROACH SLAB DETAILS.
3. THE PREFERRED EXPANSION JOINT TYPE BETWEEN THE ROADWAY END OF THE APPROACH SLAB AND SLEEPER SLAB IS STRIP SEAL EXPANSION JOINT. REFER TO DETAIL NO. 340.01 - STRIP SEAL EXPANSION JOINT.
4. PROVIDE SLIDING SURFACE BETWEEN BOTTOM OF P.C.C. PAVEMENT OR MOMENT SLAB AND TOP OF SLEEPER SLAB FOOTER.
5. IT IS DELDOT'S PREFERENCE TO HAVE THE SLEEPER SLAB WIDTH EQUAL TO THE APPROACH SLAB WIDTH. REFER TO DETAIL NO. 325.03 - 'APPROACH SLAB DETAILS' FOR MORE INFORMATION.
6. BREAK POINTS SHOULD BE CALLED OUT AND SHOWN IN SLEEPER SLAB PLAN. IF POSSIBLE, ANY SUPERELEVATION TRANSITIONS SHOULD BE COMPLETED OUTSIDE THE LIMITS OF THE BRIDGE, INCLUDING THE LIMITS OF SLEEPER SLAB.

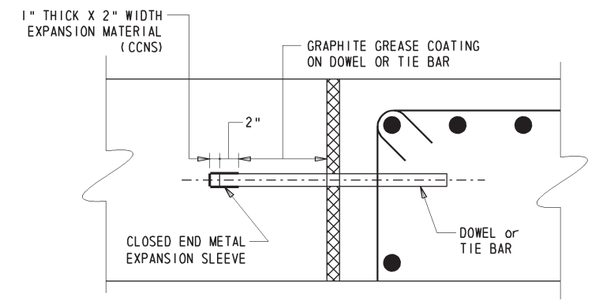

DETAIL A

CCNS = CLOSED CELL NEOPRENE SPONGE

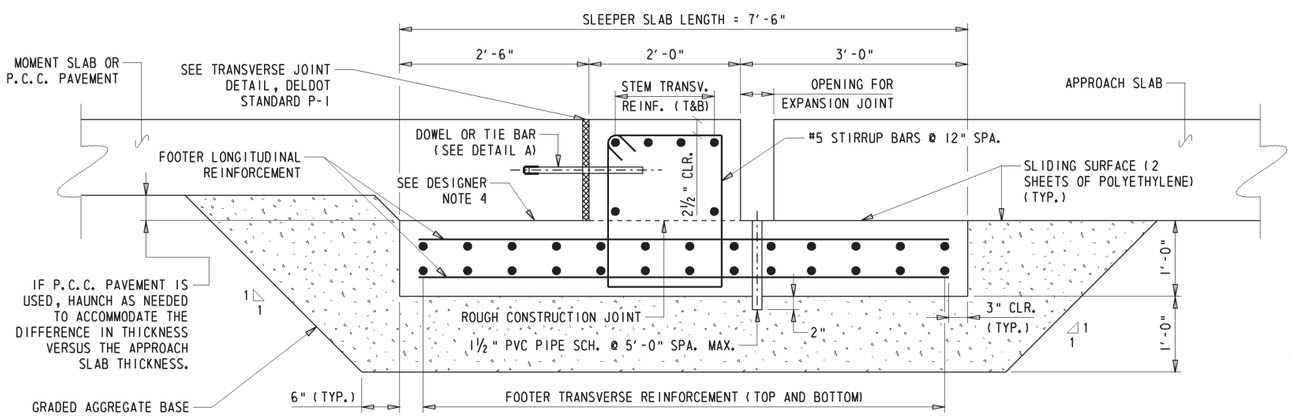

SECTION A-A (WITH MOMENT SLAB OR P.C.C. PAVEMENT)

NOTE: EXPANSION JOINT DETAILS NOT SHOWN FOR CLARITY.

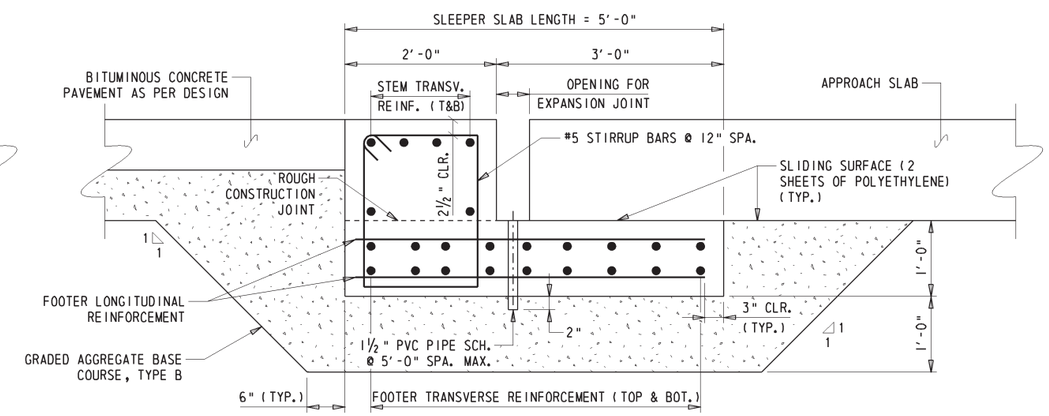

SECTION A-A (WITH BITUMINOUS CONCRETE PAVEMENT)

DELAWARE DEPARTMENT OF TRANSPORTATION **BRIDGE DESIGN MANUAL**	SLEEPER SLAB DETAILS	NOT TO SCALE	ISSUE DATE 10/01/2015	DETAIL No. 325.05 SHEET No. 1 of 1

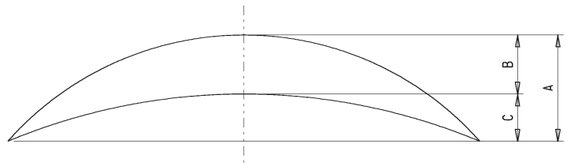

A =ESTIMATED PRESTRESS CAMBER LESS DEFLECTION DUE TO DEAD LOAD OF BEAM TIMES CREEP.
B =DEFLECTION DUE TO DEAD LOAD OF (SLAB or OVERLAY) AND PARAPET.
C =A - B = NET CAMBER.

CAMBER DIAGRAM

CAMBER (INCHES)

SPAN	A	B	C	SPAN	A	B	C
SX-GX	----	----	----	SX-GX	----	----	----
SX-GX	----	----	----	SX-GX	----	----	----
SX-GX	----	----	----	SX-GX	----	----	----
SX-GX	----	----	----	SX-GX	----	----	----
SX-GX	----	----	----	SX-GX	----	----	----
SX-GX	----	----	----	SX-GX	----	----	----
SX-GX	----	----	----	SX-GX	----	----	----
SX-GX	----	----	----	SX-GX	----	----	----
SX-GX	----	----	----	SX-GX	----	----	----
SX-GX	----	----	----	SX-GX	----	----	----
SX-GX	----	----	----	SX-GX	----	----	----
SX-GX	----	----	----	SX-GX	----	----	----
SX-GX	----	----	----	SX-GX	----	----	----
SX-GX	----	----	----	SX-GX	----	----	----
SX-GX	----	----	----	SX-GX	----	----	----
SX-GX	----	----	----	SX-GX	----	----	----
SX-GX	----	----	----	SX-GX	----	----	----
SX-GX	----	----	----	SX-GX	----	----	----

NOTE:
'S' DENOTES SPAN
'G' DENOTES GIRDER

DESIGNER NOTES

1. REFER TO SECTIONS 106.9.9 AND 205.7.3.6 FOR MORE INFORMATION ON CAMBER OF PRESTRESSED CONCRETE BEAMS.
2. REFER TO SECTION 612.03(E) IN THE STANDARD SPECIFICATIONS TO DETERMINE THE NEED TO ADD PROJECT-SPECIFIC BEAM NOTES ON BEAM DETAIL SHEETS.
3. CAMBER DIAGRAM AND CAMBER TABLE ARE REQUIRED TO BE SHOWN ON THE PRESTRESSED CONCRETE BEAM PLAN SHEETS. THE CAMBER TABLE SHOWN ON THIS SHEET IS A RECOMMENDED EXAMPLE TO USE. FOR SMALLER AND NON-COMPLEX PROJECTS, THE DESIGNER MAY CONSIDER USING ONLY CAMBER DIAGRAM.
4. REFER TO DETAIL NO. 330.02 FOR MORE INFORMATION ON SHEAR CONNECTORS, TIE RODS, AND SHEAR KEY TREATMENTS OF ADJACENT BOX BEAMS AND VOIDED SLABS.
5. REFER TO DETAIL NO. 330.03 FOR MORE INFORMATION ON FLANGE CONNECTOR DETAILS BETWEEN NEXT BEAMS.
6. REFER TO DETAIL NO. 330.04 FOR MORE INFORMATION ON INTERMEDIATE DIAPHRAGMS BETWEEN PCEF BEAMS.
7. THE EXAMPLE FRAMING PLAN FOR ADJACENT BOX BEAMS/VOIDED SLABS SHOWS THE SHEAR CONNECTORS AND TIE RODS ALTERNATIVE BEING USED. FOR MORE INFORMATION ON THE SECOND ALTERNATIVE UTILIZING USE OF UHPC CONNECTIONS (NOT SHOWN ON THIS DETAIL), REFER TO DETAIL NO. 330.02 (uhpc details to be added in future revisions).
8. TIE RODS ARE TYPICALLY PLACED AT THE MIDPOINT FOR BEAM LENGTHS OF 40'-0" OR LESS. FOR BEAM LENGTHS GREATER THAN 40'-0", TIE RODS ARE TYPICALLY PLACED AT THIRD-POINTS.
9. SHEAR CONNECTORS ARE TYPICALLY SPACED AT 4'-0" BUT AT BREAK POINTS WHERE THE BEAMS ARE NOT CONNECTED VIA TIE RODS, THE SHEAR CONNECTOR SPACING TYPICALLY IS REDUCED TO 2'-0".
10. REFER TO SECTION 106.9.3 FOR MORE INFORMATION ON INTERMEDIATE DIAPHRAGM SPACINGS TO USE.
11. EXAMPLE USED IN FRAMING PLAN ASSUMES A TWO-SPAN BRIDGE WITH SKEWED LEFT-MOST ABUTMENT AND PIER/RIGHT-MOST ABUTMENT WITH A ZERO SKEW.

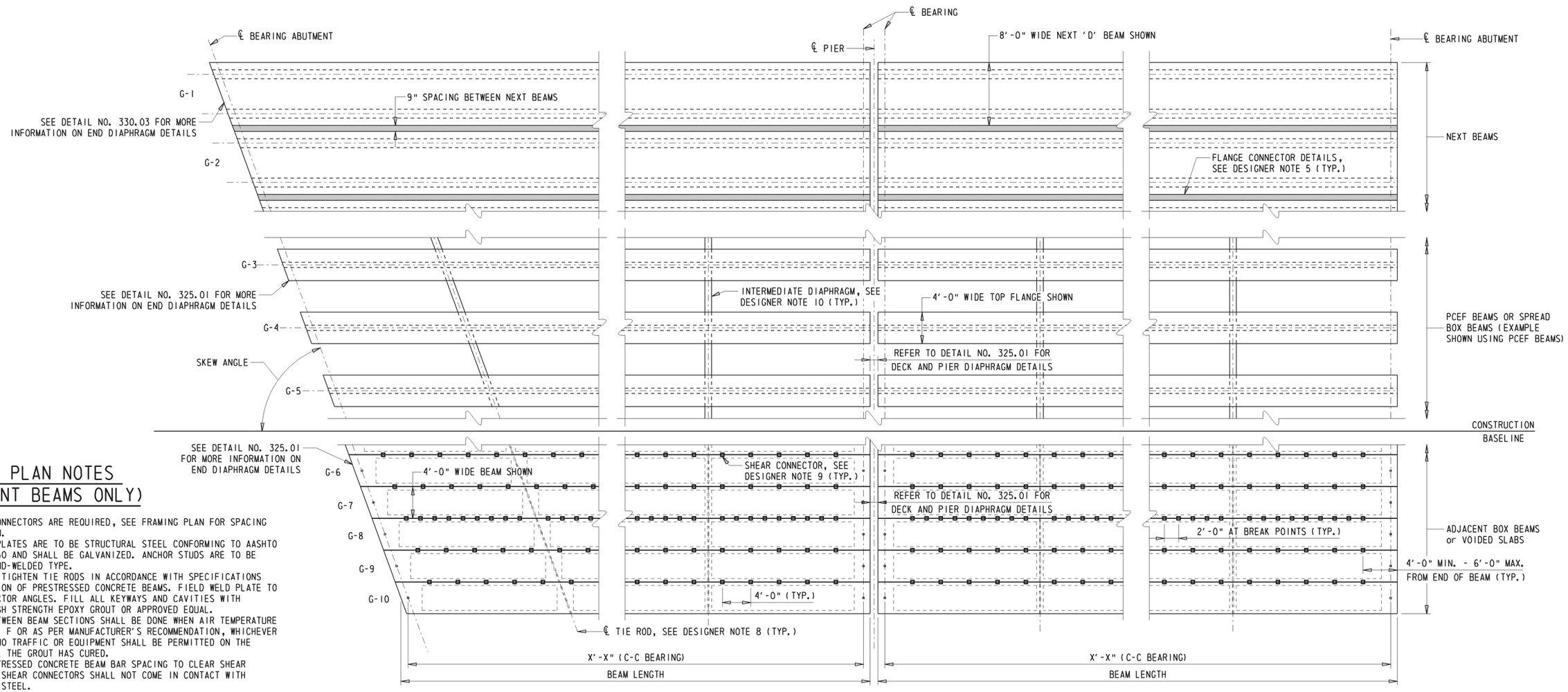

FRAMING PLAN

FRAMING PLAN NOTES (ADJACENT BEAMS ONLY)

1. ___ SHEAR CONNECTORS ARE REQUIRED, SEE FRAMING PLAN FOR SPACING AND LOCATION.
2. ANGLES AND PLATES ARE TO BE STRUCTURAL STEEL CONFORMING TO AASHTO M270 GRADE 50 AND SHALL BE GALVANIZED. ANCHOR STUDS ARE TO BE AUTOMATIC END-WELDED TYPE.
3. INSTALL AND TIGHTEN TIE RODS IN ACCORDANCE WITH SPECIFICATIONS AFTER ERECTION OF PRESTRESSED CONCRETE BEAMS. FIELD WELD PLATE TO SHEAR CONNECTOR ANGLES. FILL ALL KEYWAYS AND CAVITIES WITH APPROVED HIGH STRENGTH EPOXY GROUT OR APPROVED EQUAL.
4. GROUTING BETWEEN BEAM SECTIONS SHALL BE DONE WHEN AIR TEMPERATURE IS ABOVE 40° F OR AS PER MANUFACTURER'S RECOMMENDATION, WHICHEVER IS HIGHER. NO TRAFFIC OR EQUIPMENT SHALL BE PERMITTED ON THE BRIDGE UNTIL THE GROUT HAS CURED.
5. ADJUST PRESTRESSED CONCRETE BEAM BAR SPACING TO CLEAR SHEAR CONNECTORS. SHEAR CONNECTORS SHALL NOT COME IN CONTACT WITH REINFORCING STEEL.
6. PAYMENT FOR MATERIAL AND LABOR OF SHEAR CONNECTORS, TIE RODS, AND SHEAR KEY TREATMENT SHALL BE INCIDENTAL TO (insert appropriate beam item number).

DELAWARE DEPARTMENT OF TRANSPORTATION
BRIDGE DESIGN MANUAL

PRESTRESSED CONCRETE BEAM FRAMING PLAN AND CAMBER DETAILS

NOT TO SCALE

ISSUE DATE
10/01/2015

DETAIL No. 330.01
SHEET No. 1 of 1

NOTE: NO STRANDS SHOWN FOR CLARITY, + = DENOTES AVAILABLE LOCATIONS FOR STRAND PLACEMENT. POTENTIAL BARRIER REINFORCEMENT NOT SHOWN FOR CLARITY, BUT MUST BE SHOWN IN REINFORCING BAR LIST AND BENDING DIAGRAMS.

NOTE: LEGEND TO BE ADDED ON PLAN SHEETS MUST SHOW THE FOLLOWING:

- ○ = 0.5" or 0.6" DIA., 270 ksi PRESTRESSING STRANDS
- ◉ = 0.5" or 0.6" DIA., 270 ksi PRESTRESSING STRANDS TO BE EXTENDED INTO THE PIER or DECK SLAB POUROVER
- ▣ = 0.5" or 0.6" DIA., 270 ksi PRESTRESSING STRANDS TO BE DEBONDED AT X'-X" @ EACH END
- ◬ = 0.5" or 0.6" DIA., 270 ksi PRESTRESSING STRANDS TO BE DEBONDED AT X'-X" @ EACH END (If more than one debonded length is required)

NOTE: EXAMPLE SHOWN USING 4'-0" WIDE BEAM WITH HEIGHT OF 18" OR 21" UTILIZING 3 CIRCULAR VOIDS. 3'-0" WIDE BEAMS ONLY REQUIRE TWO CIRCULAR VOIDS. THE DESIGNER MAY CONSIDER ELIMINATING VOIDS IN BEAMS WITH HEIGHTS OF 18" OR 21" IF NECESSARY. EXTERIOR CIRCULAR VOID IN EXTERIOR BEAM MAY BE REMOVED TO ACCOMMODATE PROTRUDING BARS FOR BARRIERS. IT IS RECOMMENDED THAT CIRCULAR VOIDS HAVE DIAMETER OF 8 INCHES. BEAMS WITH HEIGHTS OF 12" AND 15" WILL BE SOLID SLABS.

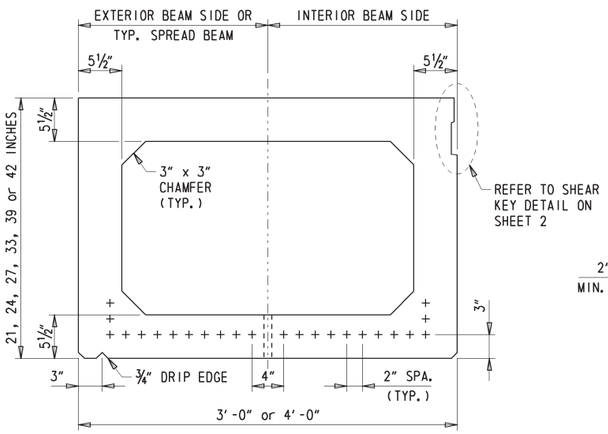

BOX BEAM STRAND CONFIGURATION

NOTE: EXAMPLE SHOWN USING 4'-0" WIDE BEAM.

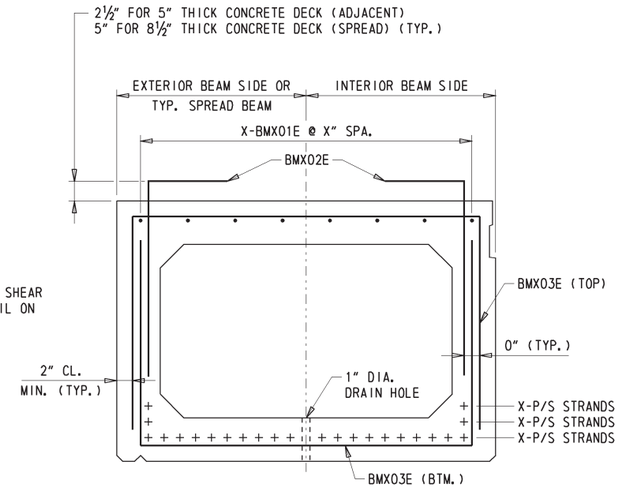

BOX BEAM REINFORCEMENT SECTION

NOTE: BMX02E REINFORCEMENT NOT REQUIRED IF BITUMINOUS CONCRETE OVERLAY IS USED IN LIEU OF CONCRETE DECK. TOP LONGITUDINAL BARS MAY BE PLACED TOP OF BMX03E TO MEET DESIGN REQUIREMENTS.

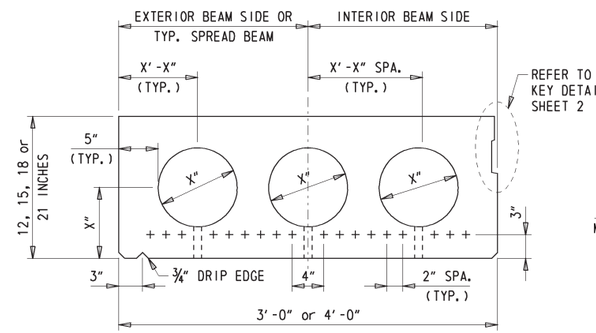

SLAB BEAM STRAND CONFIGURATION

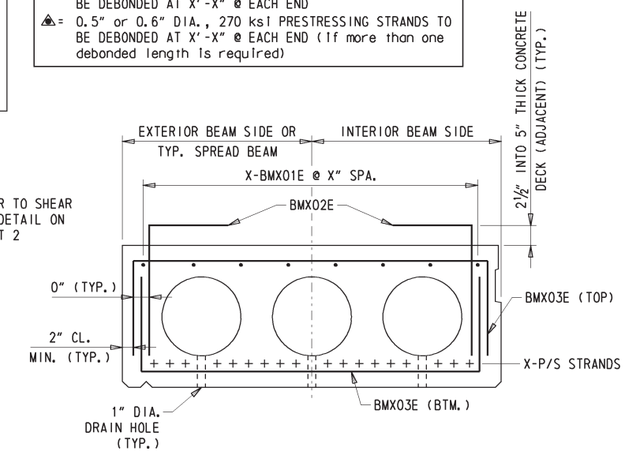

SLAB BEAM REINFORCEMENT SECTION

NOTE: BMX02E AND BMX03E (BOTTOM ONLY) REINFORCEMENT SHOULD BE COMBINED INTO ONE BAR BEND FOR SOLID SLABS IN ORDER TO REDUCE REBAR CONGESTION. BMX02E REINFORCEMENT NOT REQUIRED IF BITUMINOUS CONCRETE OVERLAY IS USED IN LIEU OF CONCRETE DECK. TOP LONGITUDINAL BARS MAY BE PLACED TOP OF BMX03E TO MEET DESIGN REQUIREMENTS.

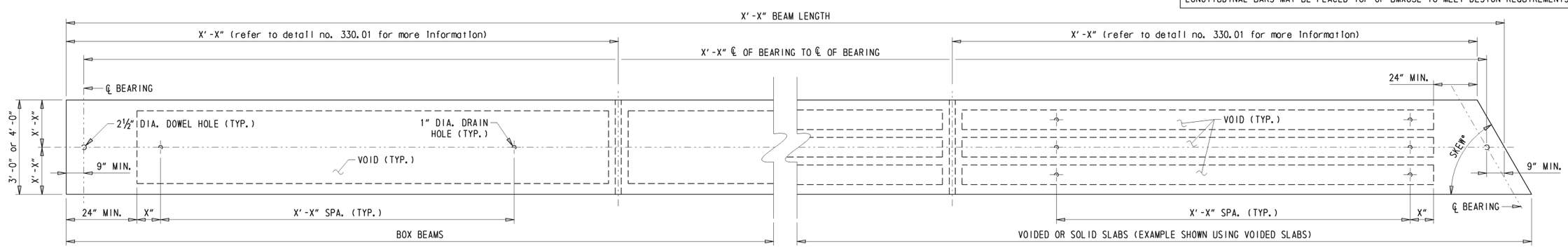

PLAN VIEW

NOTE: SHEAR CONNECTIONS FOR ADJACENT BEAMS AND SLABS NOT SHOWN FOR CLARITY. REFER TO DETAIL NO. 330.01.

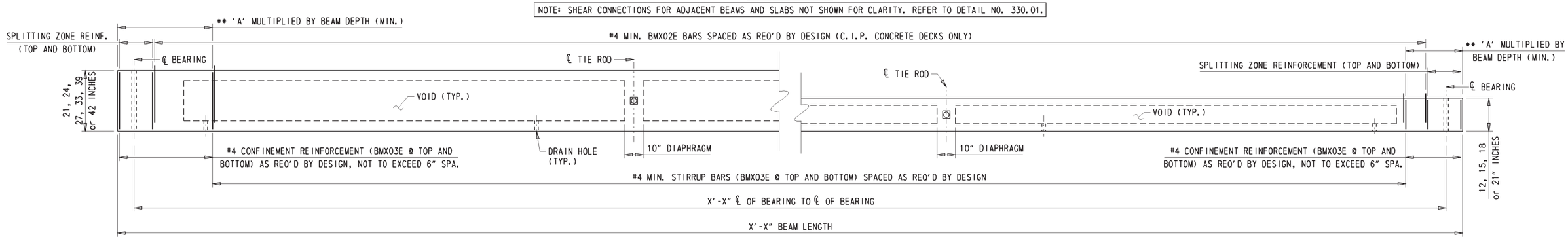

** CONFINEMENT ZONE
'A' = 1.5 FOR 0.5" DIA. STRANDS
'A' = 2.0 FOR 0.6" DIA. STRANDS

ELEVATION

NOTE: BMX01E BARS NOT SHOWN FOR CLARITY.

DELAWARE DEPARTMENT OF TRANSPORTATION **BRIDGE DESIGN MANUAL**	PRESTRESSED CONCRETE BOX BEAM BRIDGE DETAILS	NOT TO SCALE	ISSUE DATE 10/01/2015	DETAIL No. 330.02 SHEET No. 1 of 3

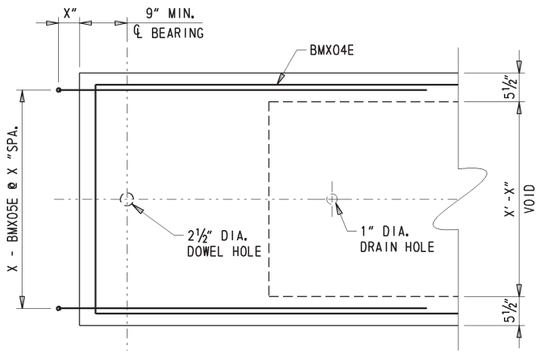

TYPICAL BOX BEAM END PLAN

WITH PROTRUDING BARS

NOTE: EXAMPLE SHOWN USING 4'-0" WIDE BEAM.

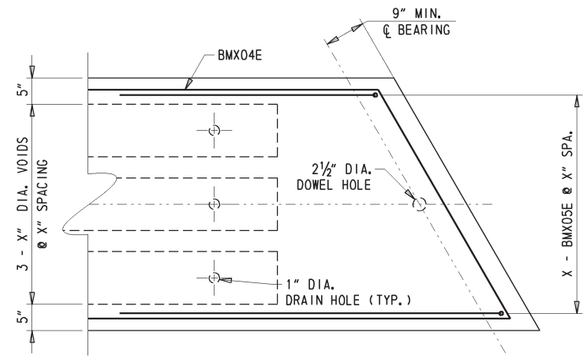

TYPICAL SLAB END PLAN

WITHOUT PROTRUDING BARS

NOTE: EXAMPLE SHOWN USING 4'-0" WIDE BEAM WITH 3 CIRCULAR VOIDS.

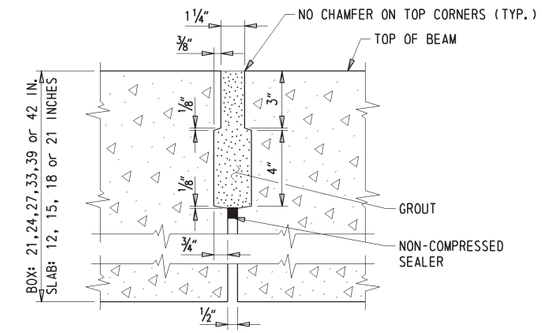

SHEAR KEY DETAIL

NOTE: THE DESIGNER MUST SPECIFY THE TYPE OF GROUT ON THE PLANS. TYPICALLY NON-EXPANSIVE/NON-SHRINKING/NON-STAINING GROUT IS USED.

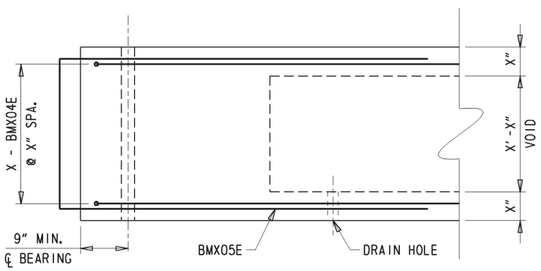

TYPICAL BOX BEAM END ELEVATION

WITH PROTRUDING BARS

NOTE: PROTRUDING BAR USED IN DIAPHRAM AND/OR DECK OVERPOUR.

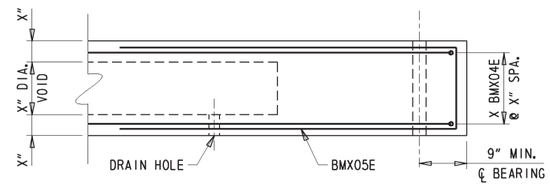

TYPICAL SLAB END ELEVATION

WITHOUT PROTRUDING BARS

NOTE: EXAMPLE SHOWN USING VOIDED SLAB BEAM.

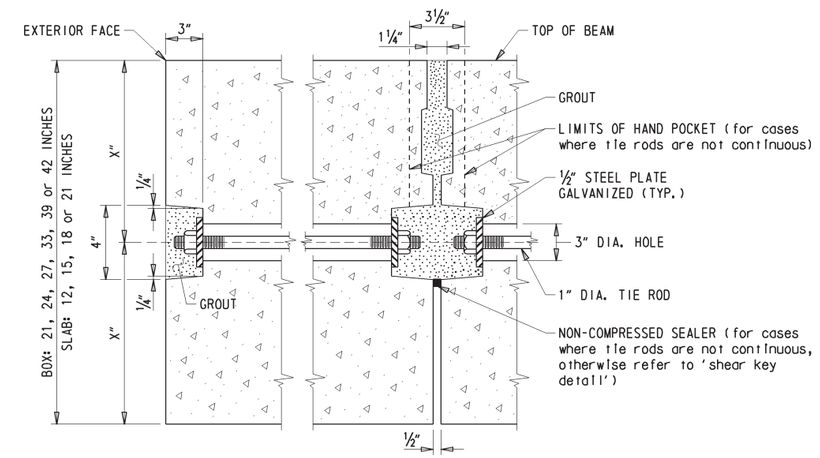

TIE ROD END DETAIL

NOTE: PRECASTER SHALL PROVIDE A HAND POCKET TO TIGHTEN TIE ROD NUT. MULTI-RODS SHOULD BE USED IF BREAK POINTS EXIST IN CROSS SLOPE.

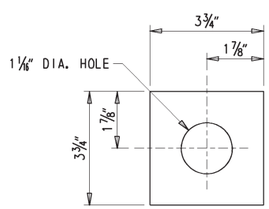

½" THK. PLATE WASHER

PLATE WASHER TO BE ASTM A572 STEEL AND PROTECTED WITH FUSION BONDED EPOXY.

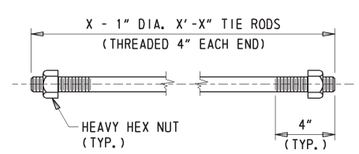

1" DIA. TIE ROD

TIE RODS TO BE ASTM A572 STEEL AND PROTECTED WITH FUSION BONDED EPOXY.

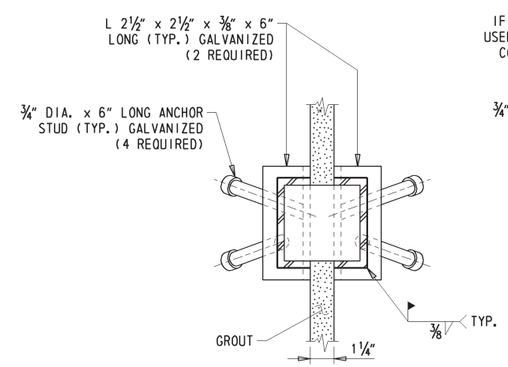

PLAN

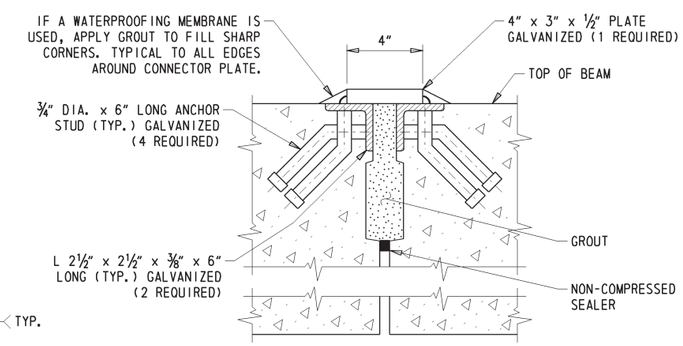

ELEVATION

SHEAR KEY CONNECTION

DELAWARE DEPARTMENT OF TRANSPORTATION **BRIDGE DESIGN MANUAL**	PRESTRESSED CONCRETE BOX BEAM BRIDGE DETAILS	NOT TO SCALE	ISSUE DATE 10/01/2015	DETAIL No. 330.02 SHEET No. 2 of 3

NOTE: ALL REINFORCEMENT FOR THE BOX BEAM IS INCLUDED IN ITEM (Insert appropriate beam item number). THE REINFORCING BAR LIST AND BENDING DIAGRAMS MUST BE SHOWN ON THE BOX BEAM SHEETS AND SEPARATE FROM THE BRIDGE REINFORCEMENT BAR SHEET.

REINFORCING BAR LIST

STRAIGHT BARS				BENT BARS			
MARK	SIZE	QTY.	LENGTH	MARK	SIZE	QTY.	LENGTH
BMX01E	----	----	----	BMX02E	----	----	----
----	----	----	----	BMX03E	----	----	----
----	----	----	----	BMX04E	----	----	----
----	----	----	----	BMX05E	----	----	----

BENDING DIAGRAMS

ALL DIMENSIONS ARE FROM OUT TO OUT. DIAGRAMS ARE NOT TO SCALE.

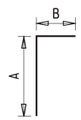

BMX02E

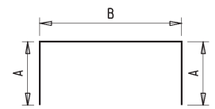

BMX03E

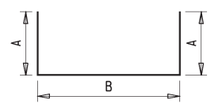

BMX04E AND BMX05E

			DEPTH OF BOX BEAM					
MARK	WIDTH	LETTER	21"	24"	27"	33"	39"	42"
BMX02E	36"	A	1'-7½"	1'-10½"	2'-1½"	2'-7½"	3'-1½"	3'-4½"
		B	0'-10"	0'-10"	0'-10"	0'-10"	0'-10"	0'-10"
	48"	A	1'-7½"	1'-10½"	2'-1½"	2'-7½"	3'-1½"	3'-4½"
		B	0'-10"	0'-10"	0'-10"	0'-10"	0'-10"	0'-10"
BMX03E	36"	A	1'-3"	1'-6"	1'-9"	2'-3"	2'-9"	3'-0"
		B	2'-8"	2'-8"	2'-8"	2'-8"	2'-8"	2'-8"
	48"	A	1'-3"	1'-6"	1'-9"	2'-3"	2'-9"	3'-0"
		B	3'-8"	3'-8"	3'-8"	3'-8"	3'-8"	3'-8"
BMX04E	36"	A	5'-9"	5'-9"	5'-9"	5'-9"	5'-9"	5'-9"
		B	2'-6"	2'-6"	2'-6"	2'-6"	2'-6"	2'-6"
	48"	A	5'-9"	5'-9"	5'-9"	5'-9"	5'-9"	5'-9"
		B	3'-6"	3'-6"	3'-6"	3'-6"	3'-6"	3'-6"
BMX05E	36"	A	5'-9"	5'-9"	5'-9"	5'-9"	5'-9"	5'-9"
		B	1'-3"	1'-6"	1'-9"	2'-3"	2'-9"	3'-0"
	48"	A	5'-9"	5'-9"	5'-9"	5'-9"	5'-9"	5'-9"
		B	1'-3"	1'-6"	1'-9"	2'-3"	2'-9"	3'-0"

			DEPTH OF SLAB BEAM					
MARK	WIDTH	LETTER	12"	15"	18"	21"	----	----
BMX02E	36"	A	10½"	1'-1½"	1'-4½"	1'-7½"	----	----
		B	0'-10"	0'-10"	0'-10"	0'-10"	----	----
	48"	A	10½"	1'-1½"	1'-4½"	1'-7½"	----	----
		B	0'-10"	0'-10"	0'-10"	0'-10"	----	----
BMX03E	36"	A	0'-6"	0"-9"	1'-0"	1'-3"	----	----
		B	2'-8"	2'-8"	2'-8"	2'-8"	----	----
	48"	A	0'-6"	0"-9"	1'-0"	1'-3"	----	----
		B	3'-8"	3'-8"	3'-8"	3'-8"	----	----
BMX04E	36"	A	5'-9"	5'-9"	5'-9"	5'-9"	----	----
		B	2'-6"	2'-6"	2'-6"	2'-6"	----	----
	48"	A	5'-9"	5'-9"	5'-9"	5'-9"	----	----
		B	3'-6"	3'-6"	3'-6"	3'-6"	----	----
BMX05E	36"	A	5'-9"	5'-9"	5'-9"	5'-9"	----	----
		B	0'-6"	0'-9"	1'-0"	1'-3"	----	----
	48"	A	5'-9"	5'-9"	5'-9"	5'-9"	----	----
		B	0'-6"	0'-9"	1'-0"	1'-3"	----	----

NOTE: THE ABOVE DIMENSIONS ARE RECOMMENDED. THE DESIGNER IS STILL RESPONSIBLE FOR ENSURING THAT THE DIMENSIONS SHOWN ON PLANS ARE ACCURATE AND PROJECT-SPECIFIC. DIMENSIONS FOR BMX02E ARE BASED ON 5" THICK CONCRETE DECK. REDUCE 'A' DIMENSION FOR BMX02E AS NECESSARY TO REDUCE CONGESTION IF MULTIPLE ROWS OF STRANDS WILL BE USED.

DESIGNER NOTES

1. REFER TO SECTION 106.9 FOR MORE INFORMATION ON THE DESIGN AND DETAILING OF PRESTRESSED CONCRETE BOX AND SLAB BEAMS. ALSO REFER TO SECTION 103.4.1.2 FOR MORE INFORMATION ON WHEN USE OF BOX OR SLAB BEAM IS APPROPRIATE.
2. FOR MORE INFORMATION ON ALLOWABLE PRESTRESSING STRAND TYPE AND SIZES, REFER TO SECTION 205.4.4.
3. REINFORCEMENT FOR BARRIERS TO BE CAST WITH PRESTRESSED CONCRETE BOX AND SLAB BEAMS NOT SHOWN FOR CLARITY. REFER TO DETAIL NO. 325.02 - 'BRIDGE RAILING DETAILS' FOR MORE INFORMATION.
4. THE PRESTRESSED CONCRETE BOX AND SLAB BEAM SECTIONS AND STRAND CONFIGURATION AS SHOWN IN THESE DETAILS ARE RECOMMENDED. IF THE DESIGNER IS CONSIDERING USING DIFFERENT STRAND PATTERNS OR CREATING NON SYMMETRICAL SECTIONS, NOTE THAT THE FABRICATION COSTS WILL LIKELY INCREASE SIGNIFICANTLY.
5. THE DETAILS SHOWN IN THIS DETAIL DOES NOT CURRENTLY INCLUDE THE UNIQUE SHEAR KEYS UTILIZING ULTRA HIGH PERFORMANCE CONCRETE (UHPC) DEVELOPED BY FHWA. THE DEPARTMENT IS CURRENTLY USING THIS OPTION IN A TRIAL PHASE. APPROVAL MUST BE OBTAINED FROM THE BRIDGE DESIGN ENGINEER TO CONSIDER THIS ALTERNATIVE.
6. THE DETAILS SHOWN ASSUMES THAT 5" THICK CONCRETE DECK ON ADJACENT BEAMS WILL BE USED. THE DESIGNER IS RESPONSIBLE FOR MODIFYING THE DETAILS HEREIN AS NECESSARY IF BITUMINOUS CONCRETE AND WATERPROOFING MEMBRANE OR 8½" THICK CONCRETE DECK ON SPREAD BEAMS WILL BE USED IN LIEU OF 5" THICK CONCRETE DECK ON ADJACENT BEAMS.
7. THE DESIGNER SHOULD NOTE ON THE PLANS THE TOTAL NUMBER OF INTERIOR AND EXTERIOR BEAMS NEEDED FOR THE PROJECT AND THE ESTIMATED WEIGHT OF THE BEAMS.
8. DETAILS FOR STAY-IN-PLACE FORMS, DECK SLAB DETAIL AT PIER, AND DECK SLAB POUROVER AT ABUTMENT CAN BE FOUND IN DETAIL NO. 325.01 - CONCRETE DECK DETAILS.
9. ENSURE WORKING DRAWINGS MEET ALL REQUIREMENTS AS OUTLINED IN SECTION 612.03(B)&(E) OF THE DELDOT STANDARD SPECIFICATIONS.
10. THIS DETAIL DOES NOT SHOW POTENTIAL PRESTRESSING STRANDS EXTENDING INTO PIER DIAPHRAGM OR DECK SLAB POUROVER FOR CLARITY. IF REQUIRED PER DESIGN, REFER TO A5.14.1.4.9 FOR MORE INFORMATION ON DESIGN AND DETAILING FOR EXTENDING OF PRESTRESSING STRANDS INTO PIER DIAPHRAGM OR DECK SLAB POUROVER.
11. THE DESIGNER MUST CONSIDER THE DIFFERENCES IN DECK THICKNESS BETWEEN CENTERLINE OF BEARINGS AND POINT OF MINIMUM THICKNESS ALONG THE BEAM DUE TO THE DIFFERENCE IN THE PROFILE TO CAMBERED SHAPE OF THE PRESTRESSED CONCRETE ADJACENT BOX AND SLAB BEAMS. THE FINAL GRADES AND SUBSTRUCTURE ELEVATIONS MUST BE ADJUSTED ACCORDINGLY.

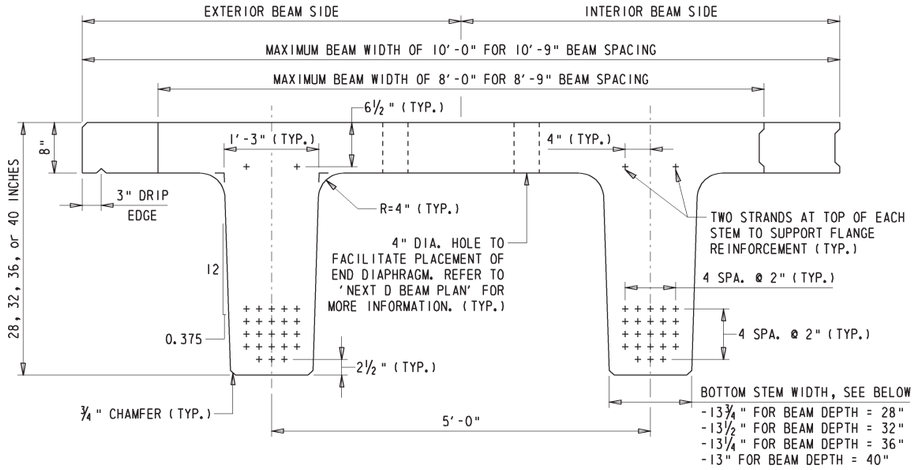

NEXT D BEAM STRAND CONFIGURATION

REFER TO FLANGE CONNECTION DETAILS FOR MORE INFORMATION ON SHEAR KEY END

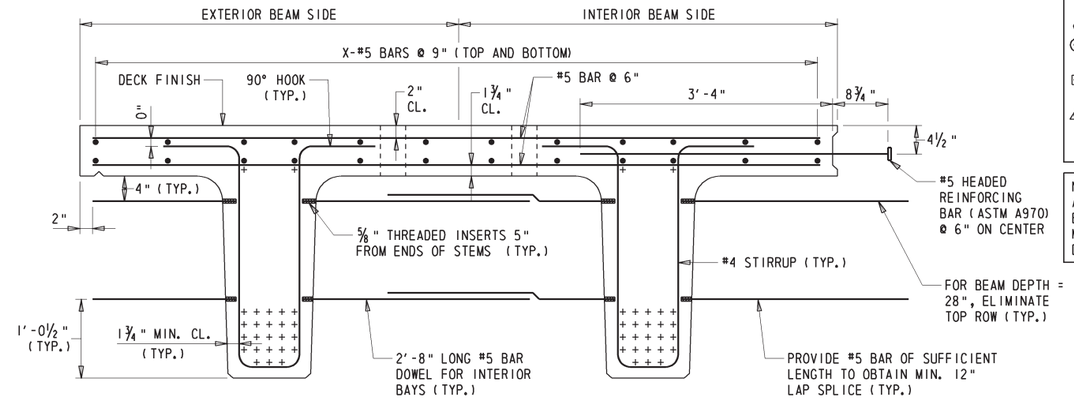

NEXT D BEAM TYPICAL REINFORCING SECTION

EXAMPLE SHOWN USING MAXIMUM WIDTH OF 10'-0"

NOTE: LEGEND TO BE ADDED ON PLAN SHEETS MUST SHOW THE FOLLOWING:

- ○ = 0.5" or 0.6" DIA., 270 ksi PRESTRESSING STRANDS
- ⊙ = 0.5" or 0.6" DIA., 270 ksi PRESTRESSING STRANDS TO BE EXTENDED INTO THE PIER OR END DIAPHRAGM
- ▣ = 0.5" or 0.6" DIA., 270 ksi PRESTRESSING STRANDS TO BE DEBONDED AT X'-X" @ EACH END
- ◬ = 0.5" or 0.6" DIA., 270 ksi PRESTRESSING STRANDS TO BE DEBONDED AT X'-X" @ EACH END (If more than one debonded length is required)

NOTE: NO STRANDS SHOWN FOR CLARITY, + = DENOTES AVAILABLE LOCATIONS FOR STRAND PLACEMENT. POTENTIAL BARRIER REINFORCEMENT NOT SHOWN FOR CLARITY, BUT MUST BE SHOWN IN REINFORCING BAR LIST AND BENDING DIAGRAMS.

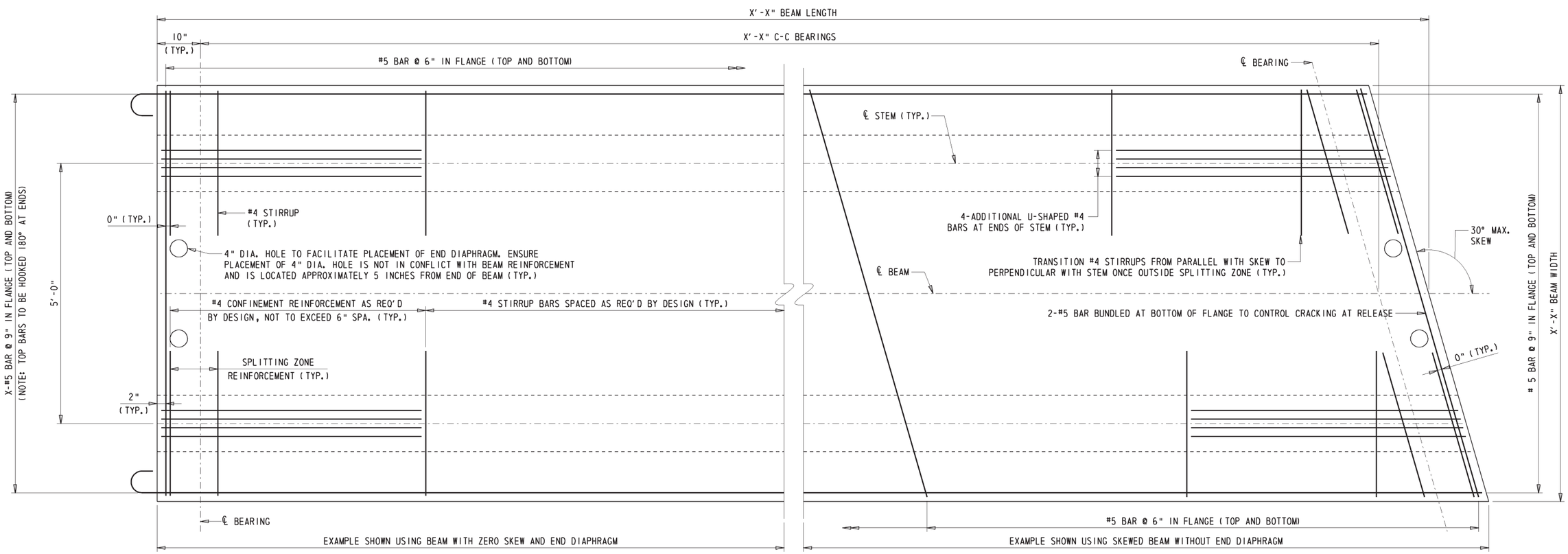

NEXT D BEAM PLAN

EXAMPLE SHOWN USING MINIMUM WIDTH OF 8'-0"

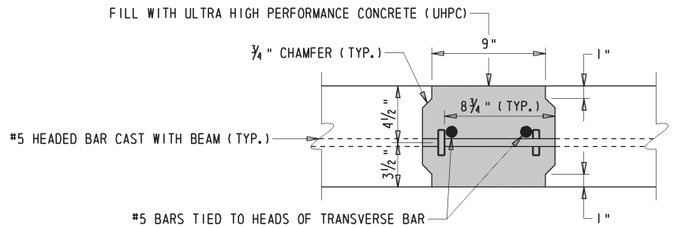

FLANGE CONNECTION SECTION

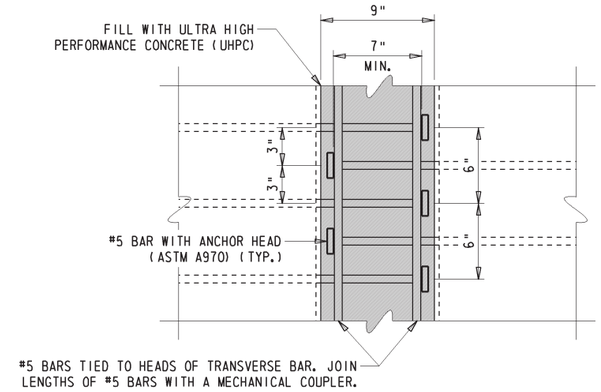

FLANGE CONNECTION PLAN

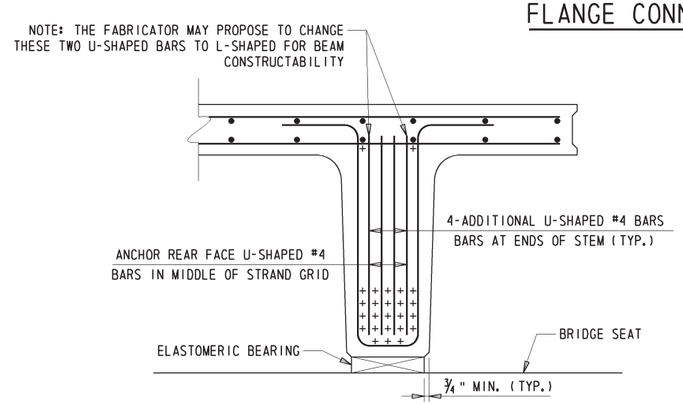

NEXT D BEAM STEM END SECTION

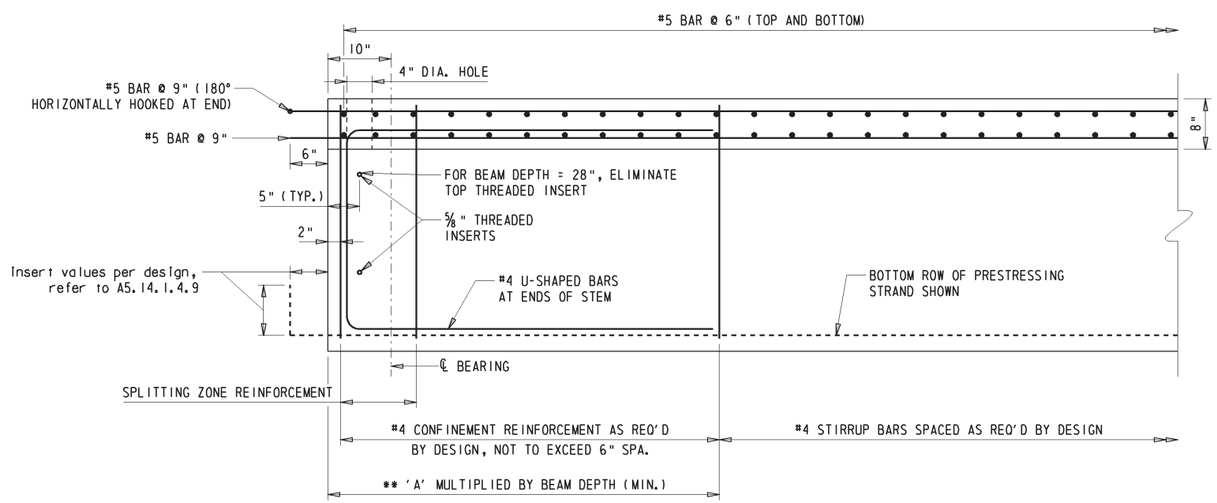

** CONFINEMENT ZONE
'A' = 1.5 FOR 0.5" DIA. STRANDS
'A' = 2.0 FOR 0.6" DIA. STRANDS

NEXT D BEAM HALF-ELEVATION

NOTE: EXAMPLE SHOWN WITH END DIAPHRAGM.

NOTE: ALL REINFORCEMENT FOR THE NEXT BEAM IS INCLUDED IN ITEM (Insert approprlate beam Item number). THE REINFORCING BAR LIST AND BENDING DIAGRAMS MUST BE SHOWN ON THE NEXT BEAM SHEETS AND SEPARATE FROM THE BRIDGE REINFORCEMENT BAR SHEET.

REINFORCING BAR LIST

STRAIGHT BARS				BENT BARS			
MARK	SIZE	QTY.	LENGTH	MARK	SIZE	QTY.	LENGTH
BM5XXE	5	----	----	BM4XXE	4	----	----
BM5XXE	5	----	----	BM4XXE	4	----	----
BM5XXE	5	----	----	BM4XXE	4	----	----
BM5XXE	5	----	----	BM4XXE	4	----	----

BENDING DIAGRAMS

NOTE: ALL DIMENSIONS ARE FROM OUT TO OUT.

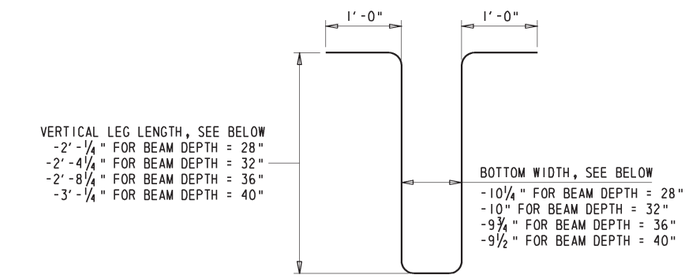

BM4XXE (#4 STIRRUP)

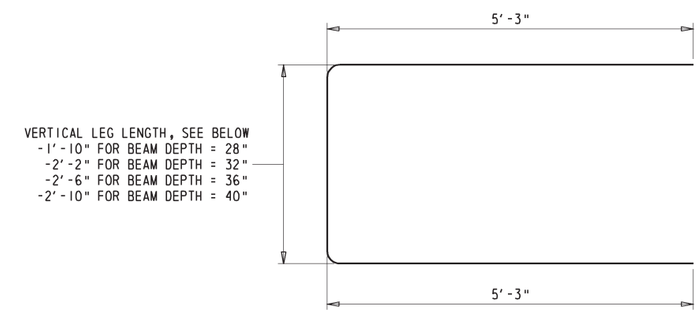

BM4XXE (#4 U-SHAPED BARS AT ENDS OF STEM)

NOTE: REINFORCING BAR LIST COUNT IS PER BEAM

NOTE: THE ABOVE DIMENSIONS ARE RECOMMENDED. THE DESIGNER IS STILL RESPONSIBLE FOR ENSURING THAT THE DIMENSIONS SHOWN ON PLANS ARE ACCURATE AND PROJECT-SPECIFIC.

NOTE: BARS SHOWN AS SOLID LINES REPRESENT BARS TO BE PLACED AT S.F. AND BETWEEN STEMS. BARS SHOWN AS DASHED LINES REPRESENT BARS PLACED AT F.F. OF DIAPHRAGMS.

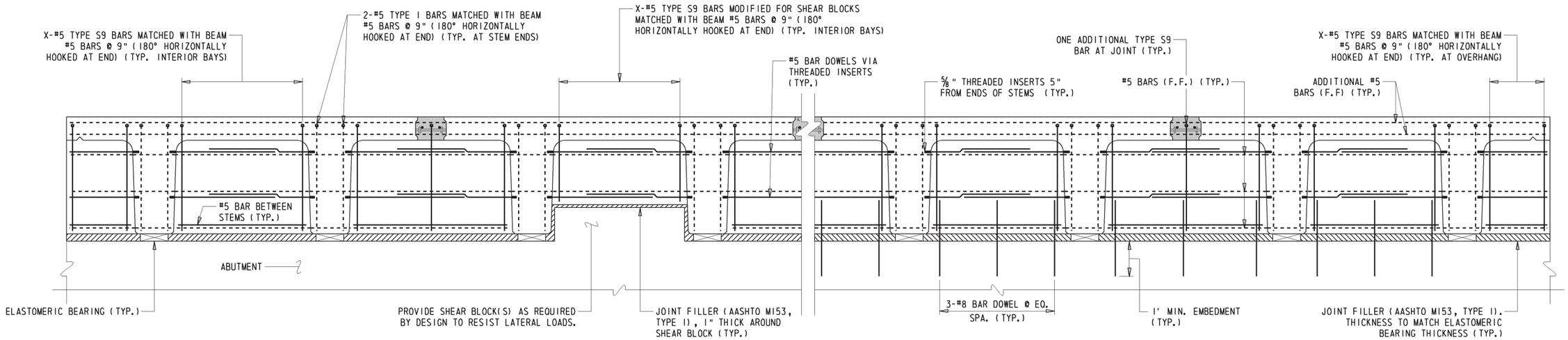

END DIAPHRAGM DETAIL FOR EXPANSION BEARINGS

EXAMPLE SHOWN USING 40" NEXT D BEAM WITH MAXIMUM BEAM WIDTH OF 10'-0" WITH 10'-9" BEAM SPACING

END DIAPHRAGM DETAIL FOR FIXED BEARINGS

EXAMPLE SHOWN USING 40" NEXT D BEAM WITH MAXIMUM BEAM WIDTH OF 10'-0" WITH 10'-9" BEAM SPACING

NOTE: EXAMPLE SHOWN USING ZERO CROSS SLOPE. FOR BITUMINOUS CONCRETE OVERLAYS, THE DESIGNER MUST SPECIFY AN INITIAL WATERPROOFING MEMBRANE TO BE PLACED ATOP THE DECKS. IN CASES WHERE THE DECK SURFACE IS EXPOSED TO THE TRAFFIC OR IF A THIN POLYMER OR EPOXY OVERLAY IS APPLIED ATOP THE DECK, PLACE THE BEAMS ON SLOPED ABUTMENT/PIER TO MEET CROSS SLOPE REQUIREMENTS. FULL DEPTH ROADBOX IS NOT REQUIRED OVER NEXT D BEAMS, THEREFORE BITUMINOUS CONCRETE OVERLAY THICKNESS SHOULD BE MINIMAL.

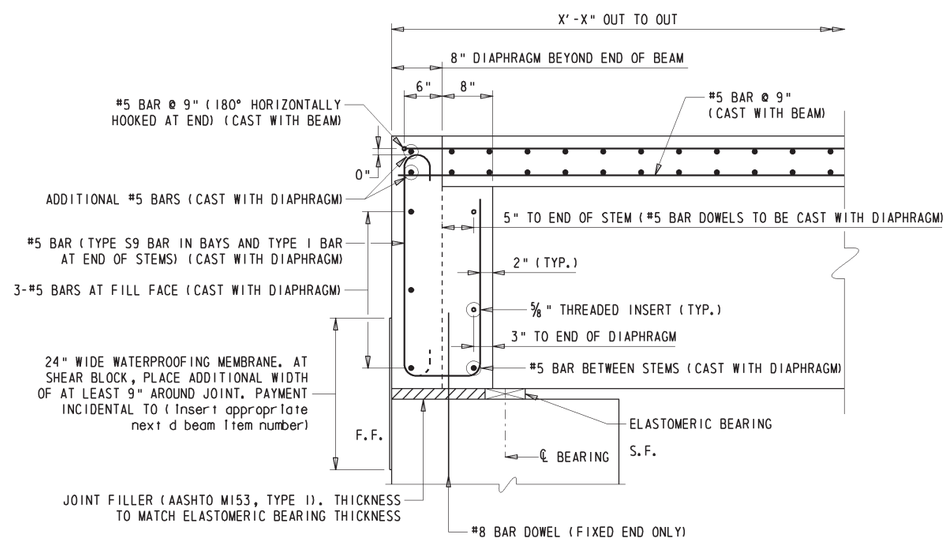

END DIAPHRAGM SECTION

EXAMPLE SHOWN USING 40" NEXT D BEAM (SECTION BETWEEN STEMS) WITH 1'-4" WIDE END DIAPHRAGM AND 3'-0" WIDE ABUTMENT

F.F. = FILL FACE
S.F. = STREAM FACE

DESIGNER NOTES

1. REFER TO SECTIONS 103.4.1.2.3 AND 106.9 FOR MORE INFORMATION ON PRESTRESSED CONCRETE NEXT BEAMS.
2. ADDITIONAL GUIDANCE ON PRESTRESSED CONCRETE NEXT BEAMS CAN BE FOUND IN PUBLICATION 'GUIDELINES FOR NORTHEAST EXTREME TEE BEAM (NEXT BEAM)' BY PRECAST/PRESTRESSED CONCRETE INSTITUTE NORTHEAST.
3. THE DEPARTMENT PREFERS USE OF NEXT D BEAMS OVER NEXT E OR NEXT F BEAMS. AS RESULT, ONLY NEXT D BEAMS ARE SHOWN IN THESE DETAILS. APPROVAL FROM THE BRIDGE DESIGN ENGINEER IS NEEDED BEFORE CHOOSING NEXT E OR NEXT F BEAMS OVER NEXT D BEAMS.
4. USE OF 4" DIA. HOLES IN FLANGES TO FACILITATE PLACEMENT OF END DIAPHRAGM IS PREFERRED OVER USE OF FLANGE BLOCKOUTS. THE DESIGNER MAY CONSIDER INCREASING THE DIAMETER OF THE HOLE AS NECESSARY BUT MUST ADJUST PLACEMENT OF FLANGE REINFORCEMENT TO AVOID ANY CONFLICTS. FOR BEAMS WITH MAXIMUM WIDTH OF 10', THE DESIGNER SHOULD CONSIDER INSTALLING ONE ADDITIONAL HOLE IN EACH OF INTERIOR FLANGE OVERHANGS.
5. POTENTIAL USE OF FLANGE BLOCKOUTS ARE NOT SHOWN IN THE DETAILS. THE DESIGNER MAY CONSIDER USE OF FLANGE BLOCKOUTS IF IT IS DETERMINED IT WILL NOT CAUSE SEVERE CRACKING WITHIN THE SPLITTING ZONE AT RELEASE.
6. FURTHER GUIDANCE ON PIER DIAPHRAGM DETAILS AND DOWEL DETAILS CAN BE FOUND IN DETAIL 325.01 - CONCRETE DECK DETAILS.
7. REINFORCEMENT FOR BARRIERS TO BE CAST WITH PRESTRESSED CONCRETE NEXT BEAMS NOT SHOWN FOR CLARITY. REFER TO DETAIL NO. 325.02 - 'BRIDGE RAILING DETAILS' FOR MORE INFORMATION.
8. THE PRESTRESSED CONCRETE NEXT BEAM SECTION AND STRAND CONFIGURATION AS SHOWN IN THESE DETAILS ARE RECOMMENDED. IF THE DESIGNER IS CONSIDERING USING DIFFERENT STRAND PATTERNS OR CREATING NON SYMMETRICAL SECTIONS, NOTE THAT THE FABRICATION COSTS WILL LIKELY INCREASE SIGNIFICANTLY.
9. 0.6" DIA. PRESTRESSING STRANDS SHALL BE USED IN PRESTRESSED CONCRETE NEXT BEAMS. DRAPING OF STRANDS IN PRESTRESSED CONCRETE NEXT BEAMS IS NOT PERMITTED.
10. FLANGE CONNECTION REINFORCEMENT MUST BE PLACED PERPENDICULAR TO THE BEAM EDGE IN ALL CASES (SKEWED AND NON SKEWED CONDITIONS). FOR PRESTRESSED CONCRETE NEXT BEAMS WITH SKEWED ENDS, THE CONNECTION REINFORCEMENT SHOULD BE BEND WITHIN THE FLANGE IN ACUTE CORNERS TO PRODUCE A SQUARE PROJECTION.
11. MORE INFORMATION ON ALTERNATIVE BARRIER/PARAPET ATTACHMENTS, END DIAPHRAGM DETAILS, PIER CONTINUITY DETAILS, AND UTILITY SUPPORT DETAILS CAN BE FOUND IN THE PUBLICATION REFERENCED IN DESIGNER NOTE 2. THESE DETAILS SHOULD BE CONSIDERED IF THE DETAILS AS SHOWN IN DETAIL NO. 325.01, 325.02, AND 330.03 ARE NOT REASONABLE CHOICES BASED ON PROJECT CONDITIONS.
12. THE DESIGNER MUST VERIFY THAT THE OVERHANG REINFORCEMENT AS SHOWN IN DETAIL NO. 330.03 IS SUFFICIENT TO RESIST VEHICULAR IMPACT FORCES. ADDITIONAL REINFORCEMENT MAY BE REQUIRED.
13. FOR BRIDGES ON SAG VERTICAL CURVES, THE DESIGNER MUST CONSIDER THE APPROPRIATE OVERLAY TYPE TO USE DUE TO POTENTIAL CONFLICT BETWEEN BEAM CAMBER AND PROFILE GRADES. THE THICKNESS OF THE OVERLAY MAY BECOME EXCESSIVE AT THE BEAM ENDS.
14. FOR BRIDGES ON CREST VERTICAL CURVES, SMALL DIFFERENCES BETWEEN THE BEAM CAMBER AND THE PROFILE GRADE CAN BE ACCEPTABLE WITHOUT ANY FURTHER ADJUSTMENTS. THIS SHOULD BE NOTED AS SO ON THE PLANS.
15. ENSURE WORKING DRAWINGS MEET ALL REQUIREMENTS AS OUTLINED IN SECTION 612.03(B)&(E) OF THE DELDOT STANDARD SPECIFICATIONS.
16. THE DESIGNER MUST CONSIDER THE DIFFERENCES IN DECK THICKNESS BETWEEN CENTERLINE OF BEARINGS AND POINT OF MINIMUM THICKNESS ALONG THE BEAM DUE TO THE DIFFERENCE IN THE PROFILE TO CAMBERED SHAPE OF THE PRESTRESSED CONCRETE NEXT BEAMS. THE FINAL GRADES AND SUBSTRUCTURE ELEVATIONS MUST BE ADJUSTED ACCORDINGLY.

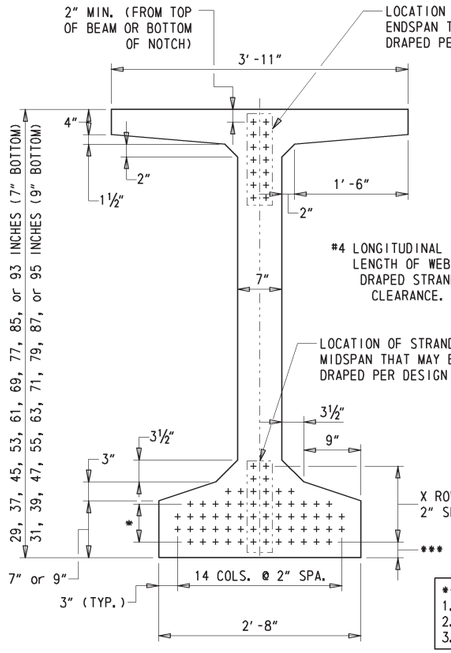

STRAND CONFIGURATION

(7" WEB, EXAMPLE SHOWN USING 9" BOTTOM FLANGE)

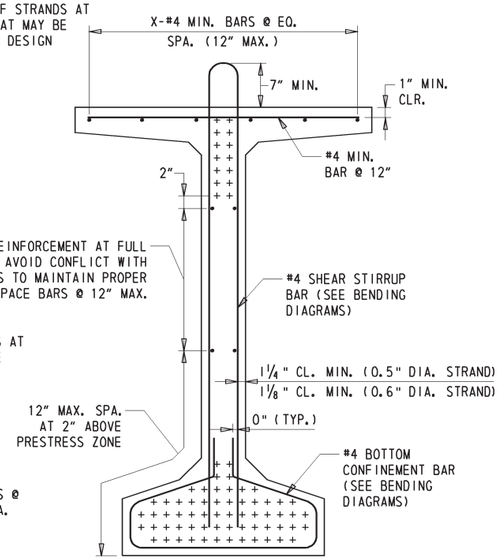

*** SPACING FROM ℄ BOTTOM ROW STRANDS TO BOTTOM OF BEAM:
1. 2" MIN. IF BEAM DAP IS NOT REQUIRED.
2. REFER TO DESIGNER NOTE 5 FOR REQ. SPACING IF BEAM DAP IS USED.
3. EXAMPLE DETAILS SHOW 2½" SPACING USED.

TYPICAL REINFORCING SECTION

(7" WEB, EXAMPLE SHOWN USING 9" BOTTOM FLANGE)

NOTE: + = DENOTES AVAILABLE LOCATIONS FOR STRAND PLACEMENT.

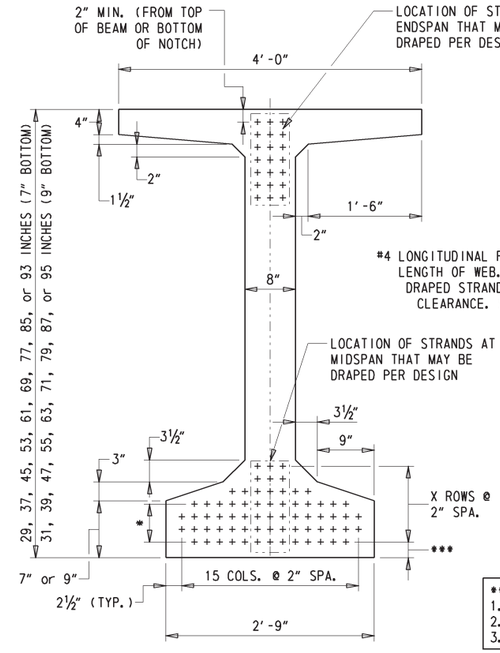

STRAND CONFIGURATION

(8" WEB, EXAMPLE SHOWN USING 9" BOTTOM FLANGE)

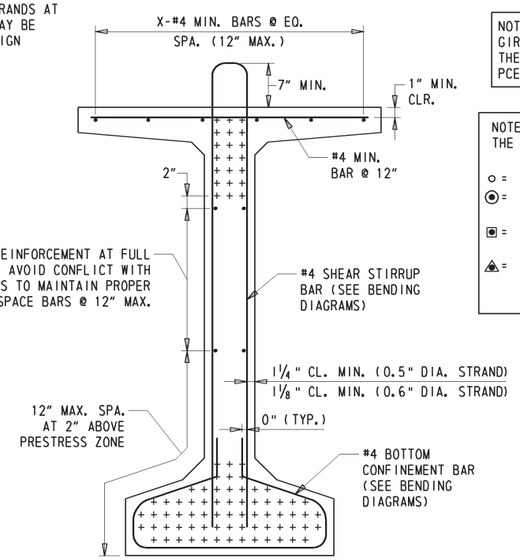

*** SPACING FROM ℄ BOTTOM ROW STRANDS TO BOTTOM OF BEAM:
1. 2" MIN. IF BEAM DAP IS NOT REQUIRED.
2. REFER TO DESIGNER NOTE 5 FOR REQ. SPACING IF BEAM DAP IS USED.
3. EXAMPLE DETAILS SHOW 2½" SPACING USED.

TYPICAL REINFORCING SECTION

(8" WEB, EXAMPLE SHOWN USING 9" BOTTOM FLANGE)

NOTE: + = DENOTES AVAILABLE LOCATIONS FOR STRAND PLACEMENT.

NOTE: THE STRAND CONFIGURATION AS SHOWN FOR PCEF GIRDERS UTILIZING 7" WEBS MAY BE SUBSTITUTED FOR THE STRAND CONFIGURATION AS SHOWN IN DETAILS FOR PCEF GIRDERS UTILIZING 8" WEBS.

NOTE: LEGEND TO BE ADDED ON PLAN SHEETS MUST SHOW THE FOLLOWING:

- ○ = 0.5" or 0.6" DIA., 270 ksi PRESTRESSING STRANDS
- ⊙ = 0.5" or 0.6" DIA., 270 ksi PRESTRESSING STRANDS TO BE EXTENDED INTO THE PIER
- ▣ = 0.5" or 0.6" DIA., 270 ksi PRESTRESSING STRANDS TO BE DEBONDED AT X'-X" @ EACH END
- ▲ = 0.5" or 0.6" DIA., 270 ksi PRESTRESSING STRANDS TO BE DEBONDED AT X'-X" @ EACH END (If more than one debonded length is required)

* STRAND LOCATION:
3 ROWS FOR 7" BOTTOM FLANGE
4 ROWS FOR 9" BOTTOM FLANGE

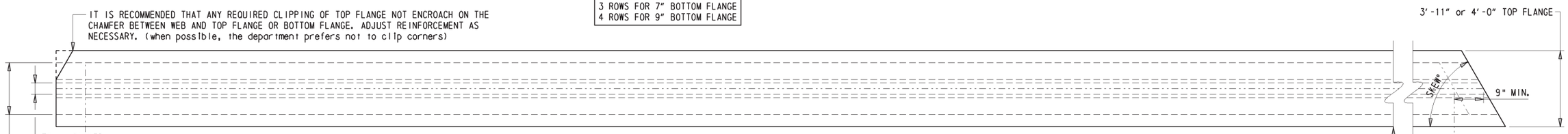

PLAN VIEW

NOTE: EXAMPLE UTILIZES ZERO SKEW AT ABUTMENT END AND 60° SKEW AT PIER END.

** CONFINEMENT ZONE
'A' = 1.5 FOR 0.5" DIA. STRANDS
'A' = 2.0 FOR 0.6" DIA. STRANDS

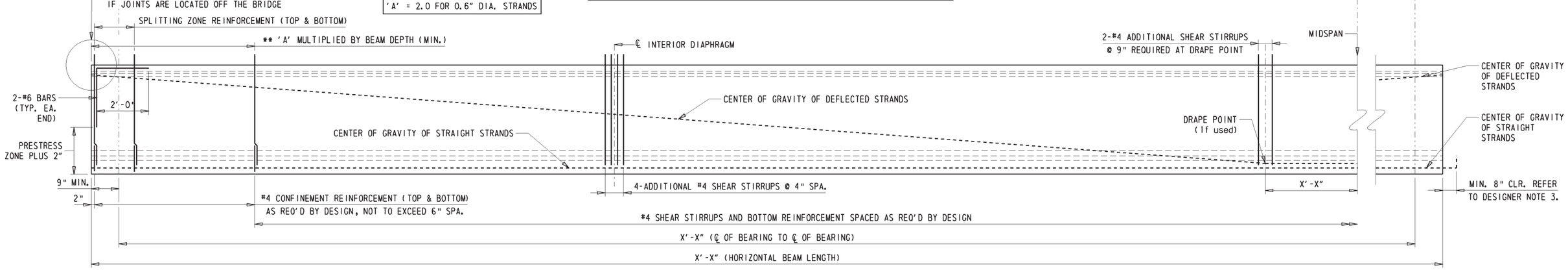

ELEVATION

NOTE: PRESTRESS ZONE IS DEFINED AS THE DISTANCE FROM THE BOTTOM OF THE BEAM TO THE TOP ROW OF STRAIGHT STRANDS.

NOTE: EXAMPLE ASSUMES JOINT WILL BE AT ABUTMENT (NO NOTCH ON TOP OF BEAM AT ABUTMENT END). LONGITUDINAL BARS NOT SHOWN FOR CLARITY.

NOTE: ALL REINFORCEMENT FOR THE PCEF BEAM IS INCLUDED IN ITEM (Insert appropriate beam Item number). THE REINFORCING BAR LIST AND BENDING DIAGRAMS MUST BE SHOWN ON THE PCEF GIRDER SHEETS AND SEPARATE FROM THE BRIDGE REINFORCEMENT BAR SHEET. THE BELOW DIMENSIONS ARE RECOMMENDED. THE DESIGNER IS STILL RESPONSIBLE FOR ENSURING THAT THE DIMENSIONS SHOWN ON PLANS ARE ACCURATE AND PROJECT-SPECIFIC.

REINFORCING BAR LIST

STRAIGHT BARS				BENT BARS			
MARK	SIZE	NUMBER	LENGTH	MARK	SIZE	NUMBER	LENGTH
BMXXXE	----	---	----	BM4XXE	4	----	----
BMXXXE	----	----	----	BM4XXE	4	----	----
BMXXXE	----	----	----	BM4XXE	4	----	----
BMXXXE	----	----	----	BM4XXE	4	----	----

BENDING DIAGRAMS

NOTE: ALL DIMENSIONS ARE FROM OUT TO OUT.

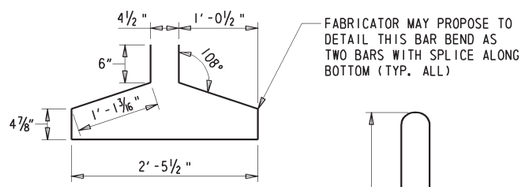

BM4XXE (7" WEB, 7" BOTTOM)

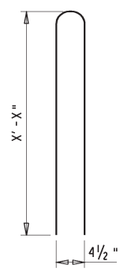

BM4XXE (7" WEB)

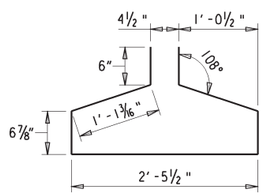

BM4XXE (7" WEB, 9" BOTTOM)

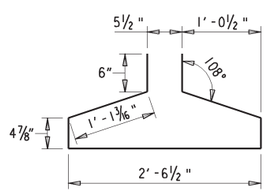

BM4XXE (8" WEB, 7" BOTTOM)

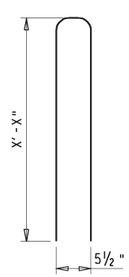

BM4XXE (8" WEB)

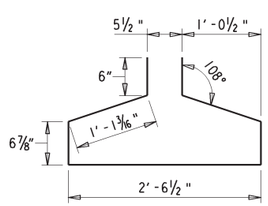

BM4XXE (8" WEB, 9" BOTTOM)

NOTE: REINFORCING BAR LIST COUNT IS PER BEAM

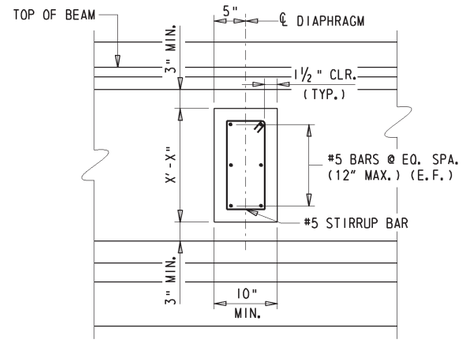

SECTION A-A

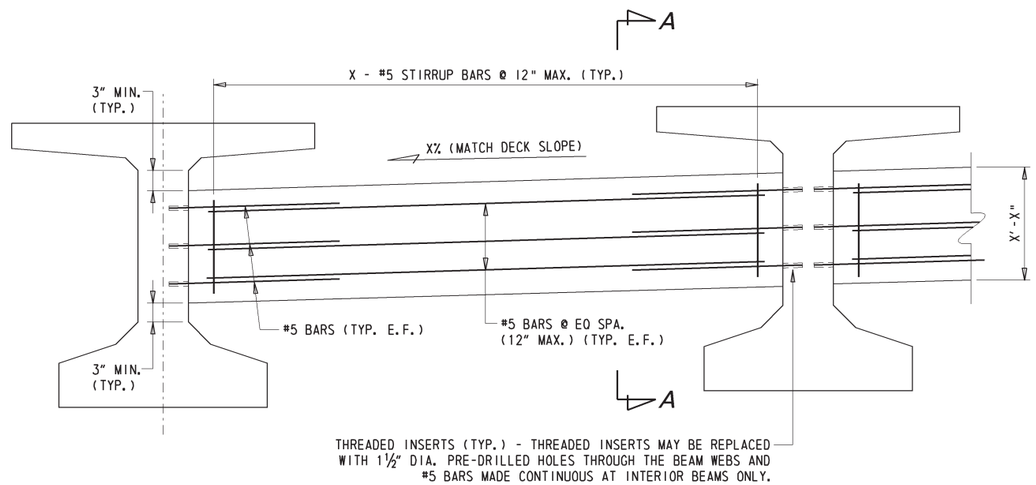

INTERMEDIATE DIAPHRAGM ELEVATION

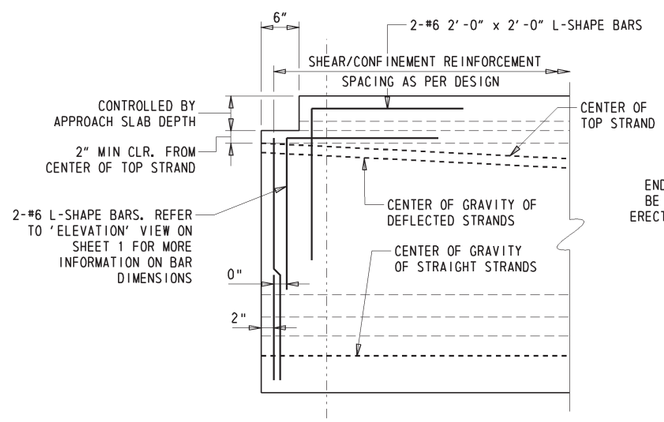

BEAM ELEVATION AT ABUTMENT

(TYPICAL FOR JOINTS LOCATED OFF THE BRIDGE. REFER TO 'ELEVATION' VIEW ON SHEET 1 FOR MORE INFORMATION ON REINFORCEMENT)

DESIGNER NOTES

1. REFER TO SECTION 106.9 FOR MORE INFORMATION ON THE DESIGN AND DETAILING OF PRESTRESSED CONCRETE PCEF GIRDERS. ALSO REFER TO SECTION 103.4.1.2 FOR MORE INFORMATION ON WHEN USE OF PCEF GIRDERS IS APPROPRIATE.
2. FOR MORE INFORMATION ON ALLOWABLE PRESTRESSING STRAND TYPE AND SIZES, REFER TO SECTION 205.4.4.
3. FOR MORE INFORMATION ON DESIGN AND DETAILING OF PRESTRESSING STRANDS EXTENDING INTO THE PIER DIAPHRAGM, REFER TO A5.14.1.4.9.
4. EXAMPLES IN THIS DETAIL UTILIZE #4 BARS. THIS IS THE MINIMUM REBAR SIZE. HIGHER BAR SIZES MAY BE REQUIRED AS PER DESIGN.
5. BEAM DAP CALCULATIONS INCLUDE BOTH BEAM CAMBER AND ROADWAY GRADE. BEAM DAP SHOULD BE USED ONLY WHEN H(MAX.) IS ¼" TO 1½". THE MINIMUM DISTANCE FROM BOTTOM OF BEAM TO CENTER OF BOTTOM-MOST STRAND ROW SHALL BE AS FOLLOW:
   -DISTANCE = 2½" WHEN H(MAX.) IS ¼" TO LESS THAN OR EQUAL TO ¾"
   -DISTANCE = 3" WHEN H(MAX.) IS GREATER THAN ¾" TO LESS THAN OR EQUAL TO 1¼"
   -DISTANCE = 3¼" WHEN H(MAX.) IS GREATER THAN 1¼" TO LESS THAN OR EQUAL TO 1½"
   -WHEN H(MAX.) IS GREATER THAN 1½", USE BEVELED SOLE PLATE AND 2" MINIMUM DISTANCE.
   -IF THE BEAM END IS SKEWED, USE OF BEVELED SOLE PLATE IS PREFERRED OVER USE OF BEAM DAP.
6. INTERMEDIATE DIAPHRAGMS FOR PRESTRESSED CONCRETE PCEF GIRDERS SHALL BE CAST-IN-PLACE CONCRETE, PRECAST CONCRETE, OR GALVANIZED STEEL. THE INTERMEDIATE DIAPHRAGM DETAILS DEPICTED ON SHEET 2 SHOWS THE CAST-IN-PLACE CONCRETE OPTION. FURTHER GUIDANCE MAY BE FOUND IN SECTION 106.9.3.
7. DETAILS FOR STAY-IN-PLACE FORMS, PIER DIAPHRAGM, AND END DIAPHRAGM CAN BE FOUND IN DETAIL NO. 325.01 - CONCRETE DECK DETAILS.
8. ENSURE WORKING DRAWINGS MEET ALL REQUIREMENTS AS OUTLINED IN SECTION 612.03(B)&(E) OF THE DELDOT STANDARD SPECIFICATIONS.

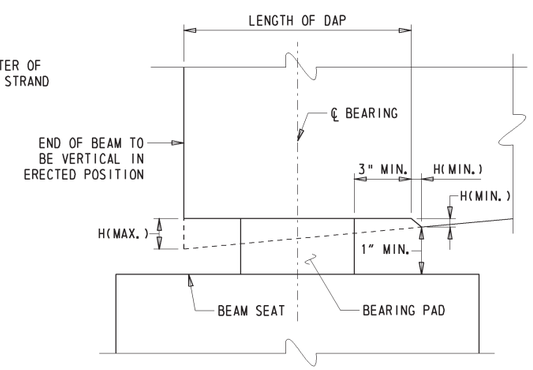

LOW END OF BEAM

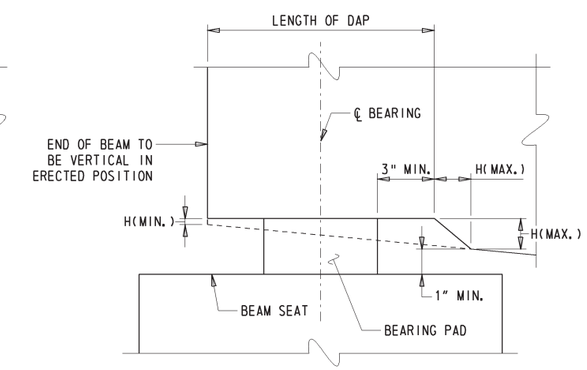

HIGH END OF BEAM

BEAM DAP DETAILS

NOTE: THE DAP LENGTH MUST PARALLEL BEARING PAD EDGE. REFER TO DESIGNER NOTE 5 FOR MORE INFORMATION.

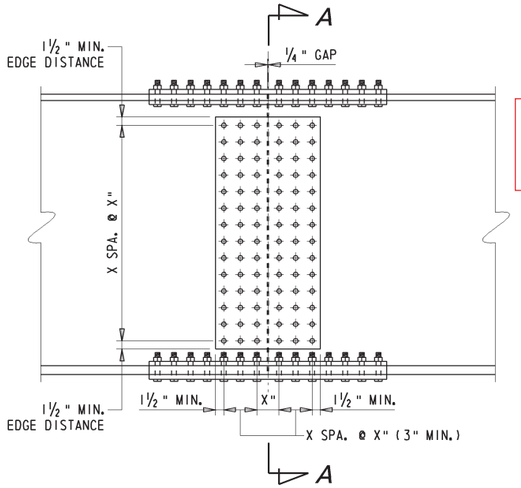

WEB SPLICE DETAIL

NOTE: EXAMPLE SHOWN MUST BE MODIFIED TO MEET DESIGN REQUIREMENTS. TYP. ALL FOR SPLICE DETAILS SHOWN ON THIS SHEET.

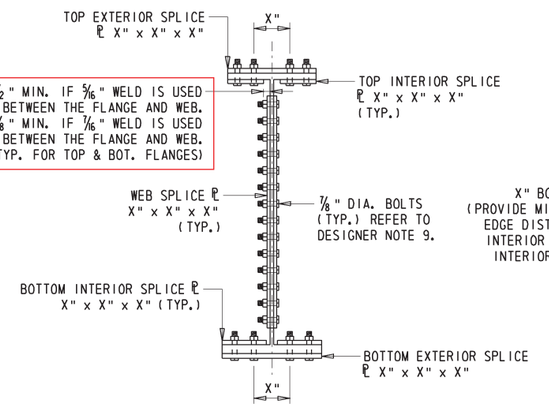

SECTION A-A

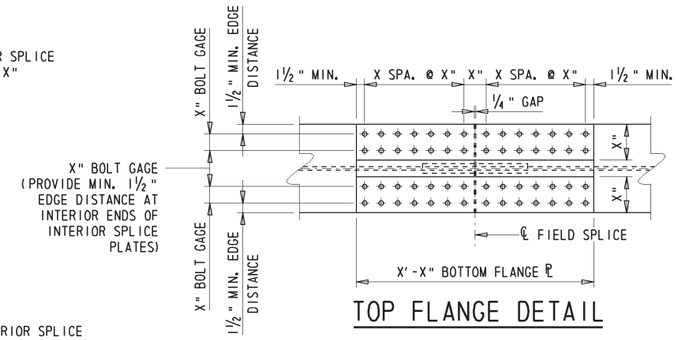

TOP FLANGE DETAIL

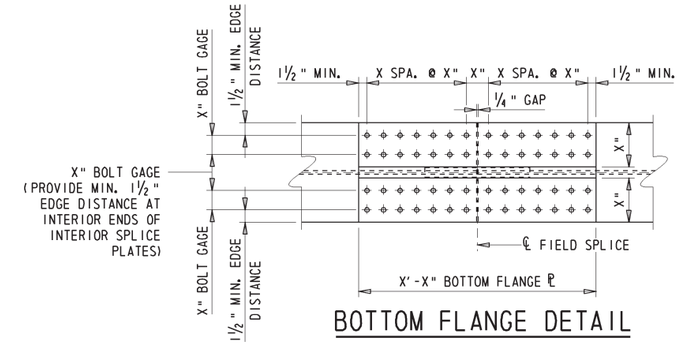

BOTTOM FLANGE DETAIL

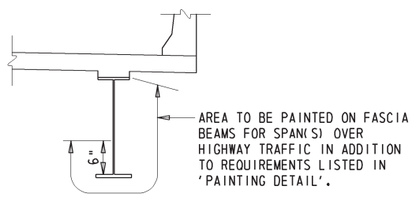

FASCIA BEAM PAINTING DETAIL

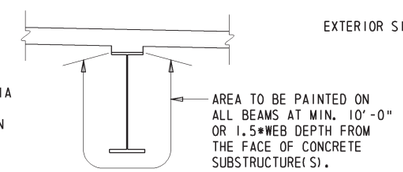

PAINTING DETAIL

NOTE: PROVIDE ABOVE DETAILS FOR WEATHERED STEEL BRIDGES.

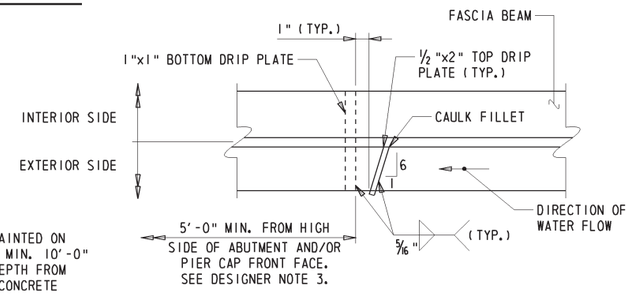

DRIP PLATE DETAIL

NOTE: PROVIDE ABOVE DETAIL FOR WEATHERED STEEL BRIDGES.

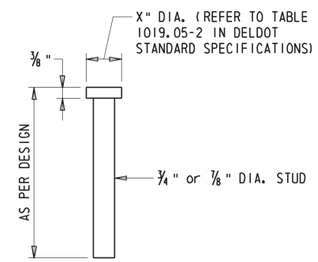

STUD DETAIL

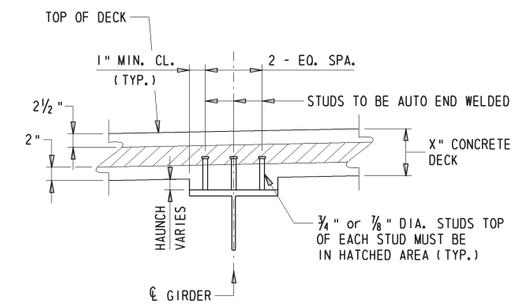

SHEAR STUD DETAIL

NOTE: EXAMPLE SHOWN USING 3 SHEAR STUDS PER ROW.

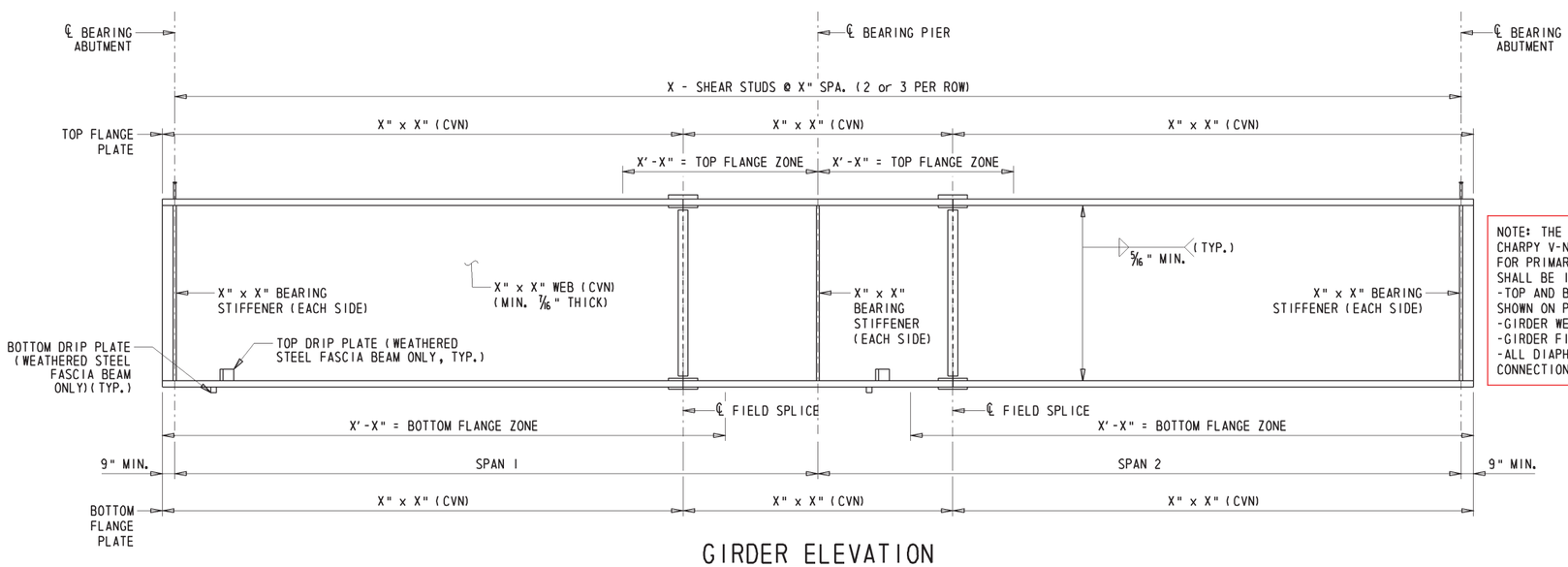

GIRDER ELEVATION

NOTE: THE ADDITIONAL REQUIREMENTS FOR CHARPY V-NOTCH TESTING OF AASHTO M270 FOR PRIMARY LOAD CARRYING MEMBERS SHALL BE INCLUDED FOR THE FOLLOWING:
- TOP AND BOTTOM GIRDER FLANGES AS SHOWN ON PLANS
- GIRDER WEB PLATES AS SHOWN ON PLANS
- GIRDER FIELD SPLICE PLATES
- ALL DIAPHRAGM MEMBERS AND DIAPHRAGM CONNECTION PLATES

NOTE: CONNECTION PLATES AND POTENTIAL JACKING STIFFENERS NOT SHOWN FOR CLARITY. 'CVN' DENOTES CHARPY V-NOTCH TESTING.

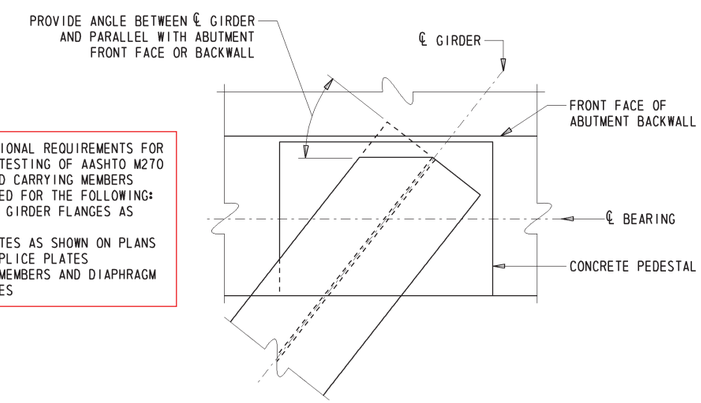

GIRDER FLANGE CLIP DETAIL

NOTE: PROVIDE SIMILAR ABOVE DETAIL AS REQUIRED FOR SKEWED BRIDGES. SOLE PLATE AND BEARING NOT SHOWN FOR CLARITY.

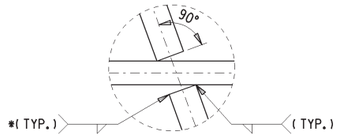

DETAIL A

* NOTE: WELD SIZE MUST BE INCREASED BY AMOUNT OF GAP BETWEEN BEARING STIFFENER OR CONNECTION PLATE AND WEB WHEN GAP EXCEEDS 1/16". INDICATE SIZE ON SHOP DRAWINGS.

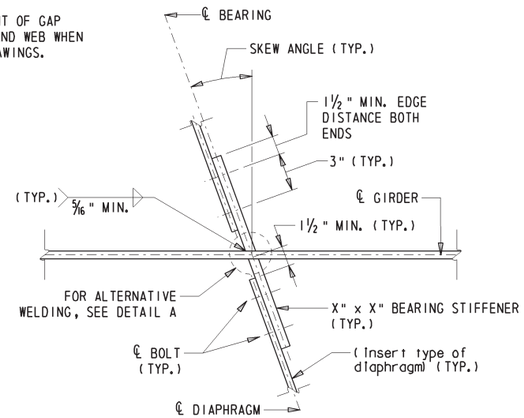

CONNECTION PLATE DETAIL FOR SKEWS UP TO 20° (OPTION 1)

NOTE: EXAMPLE SHOWN USING BEARING STIFFENERS. TYPICAL FOR K-SHAPED INTERMEDIATE DIAPHRAGMS AND END/INTERMEDIATE DIAPHRAGMS UTILIZING MC CHANNELS OR W-BEAMS.

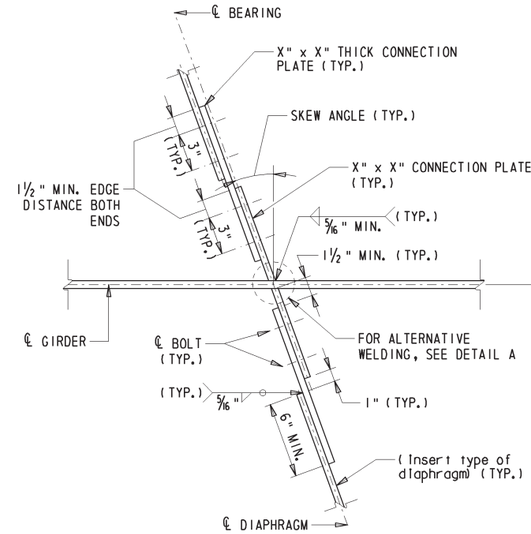

CONNECTION PLATE DETAIL FOR SKEWS UP TO 20° (OPTION 2)

NOTE: THE WELDING IN 'ALTERNATE INSTALLATION' MUST BE DONE BY THE FABRICATOR. EXAMPLE SHOWN USING CONNECTION PLATES. TYPICAL FOR INTERMEDIATE CROSS FRAME DIAPHRAGMS AND END DIAPHRAGMS UTILIZING W-BEAMS.

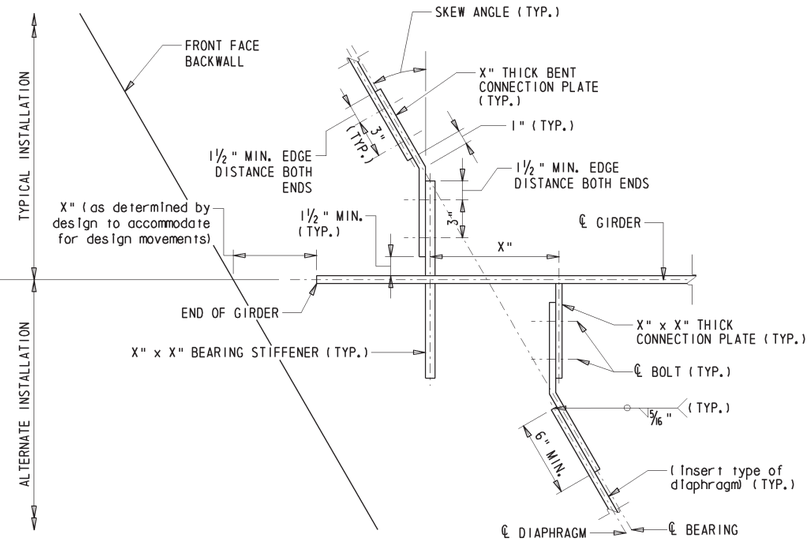

CONNECTION PLATE DETAIL FOR SKEWS GREATER THAN 20° (END & PIER ONLY)

NOTE: THE WELDING IN 'ALTERNATE INSTALLATION' MUST BE DONE BY THE FABRICATOR.

NOTE:
X = 1/4" +/- 1/8"
Y = 1/2" +/- 1/4"
Z = FOLLOWING:
-2½" FOR ½" WEB
-3" FOR 9/16" WEB
-4" FOR ¾" WEB

BEARING AREA NOTES: PROVIDE BOTTOM FLANGE IN A TRUE HORIZONTAL PLANE IN TRANSVERSE DIRECTION AND IN A TRUE PLANE LONGITUDINALLY OVER DIMENSION "L", WHERE L = WIDTH OF SOLE PLATE + (Insert value)" AHEAD AND BACK, WHERE APPLICABLE. IF THE SOLE PLATE IS WELDED TO THE BOTTOM FLANGE, PROVIDE THE SOLE PLATE MEETING THE SAME FLATNESS REQUIREMENTS. ENSURE THE SOLE PLATES AND BEARINGS ARE IN FULL CONTACT WITH ONE OTHER AND LOADED UNIFORMLY AFTER ALL DEAD LOAD IS PLACED. MAKE NECESSARY SHOP AND/OR FIELD ADJUSTMENTS TO PROVIDE UNIFORM BEARING STRESS UNDER ALL DEAD LOADS.

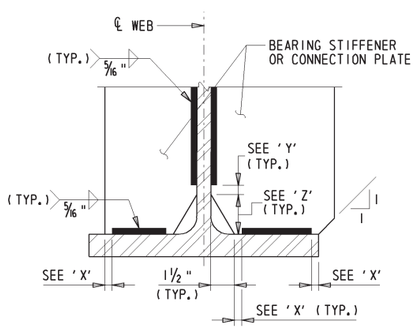

WELD TERMINATION AND CORNER CHAMFER DETAIL

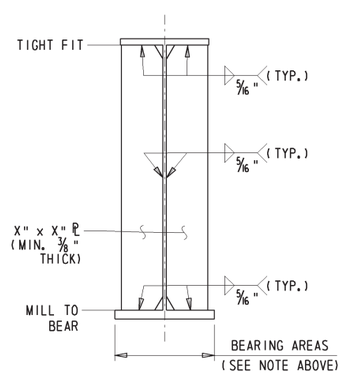

BEARING STIFFENER DETAIL

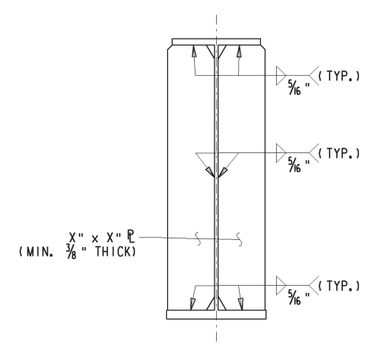

CONNECTION PLATE DETAIL FOR INTERMEDIATE DIAPHRAGMS

NOTE: CONNECTION PLATES NOT NEEDED ON EXTERIOR SIDE OF THE FASCIA GIRDER/BEAM.

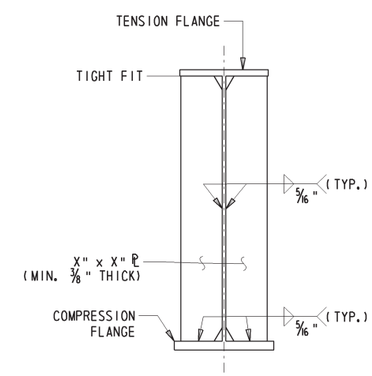

INTERMEDIATE STIFFENER DETAIL

NEGATIVE MOMENT REGION

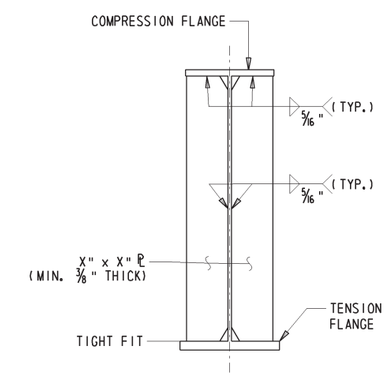

INTERMEDIATE STIFFENER DETAIL

POSITIVE MOMENT REGION

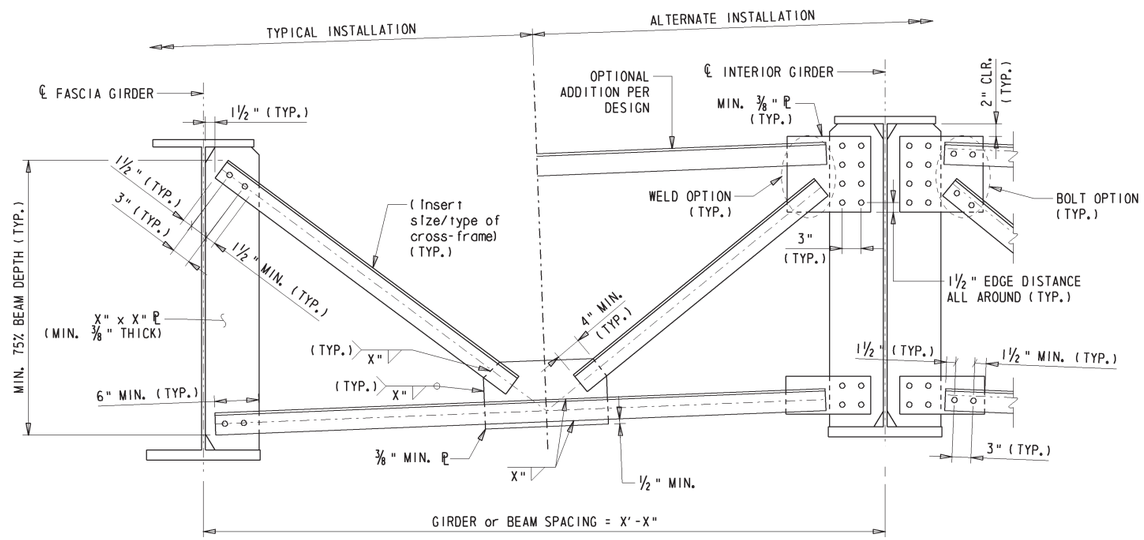

INTERMEDIATE CROSS-FRAME DETAIL

NOTE: EXAMPLE SHOWN USING L-SHAPE CROSS-FRAMES. WT-SHAPES OPTIONAL FOR CURVED GIRDERS.

DESIGNER NOTES

1. REFER TO SECTION 106.8 FOR FURTHER INFORMATION ON STEEL SUPERSTRUCTURE DESIGN CONSIDERATIONS.
2. ADDITIONAL GUIDANCE ON DETAILING OF STEEL SUPERSTRUCTURES CAN BE FOUND IN PUBLICATION 'AASHTO/NSBA STEEL BRIDGE COLLABORATION G 1.2 - 2003 -DESIGN DRAWING PRESENTATION GUIDELINES'.
3. AT 'DRIP PLATE DETAIL', THE DESIGNER SHOULD CONSIDER INCREASING THE DISTANCE GREATER THAN THE SPECIFIED 5'-0" MINIMUM FOR TALL ABUTMENTS OR PIERS TO LIMIT THE POTENTIAL FOR WIND-BLOWN WATER TO SPLASH ON THE CONCRETE SURFACES.
4. IF USE OF HIGHER PERFORMANCE STEELS (GRADES HPS 70W OR HPS 100W) ARE NEEDED, SPECIFICALLY CALL OUT WHICH STEEL PLATES WITHIN THE BEAM ARE TO BE MADE OF MATERIALS OTHER THAN GRADE 50W. REFER TO SECTION 106.8.1.3 FOR MORE INFORMATION.
5. MODIFIED DIAPHRAGMS OR CROSS-FRAMES TO SUPPORT UTILITY INFRASTRUCTURE NOT SHOWN IN THESE DETAILS. IF SUCH SUPPORTS ARE NEEDED, THE DETAILS MUST BE SHOWN ON PLANS.
6. IT IS PREFERRED TO NOT INCLUDE JACKING STIFFENERS IN END DIAPHRAGMS (IF MC-SHAPE OR W-BEAM DIAPHRAGMS ARE USED) FOR FUTURE JACKING DUE TO UNCERTAINLY OF EXACT PLACEMENT OF FUTURE JACKING. SUCH JACKING STIFFENERS SHOULD BE ADDED IN THE FIELD BY THE CONTRACTOR TO PERFORM JACKING OPERATIONS AT A LATER DATE. HOWEVER IF THE ALTERNATE END CROSS-FRAME AS SHOWN IN 'END DIAPHRAGM or END CROSS FRAME DETAILS' IS USED, THE DESIGNER SHOULD ADD FUTURE JACKING STIFFENERS AS APPROPRIATE IN THE MAIN BEAM/GIRDERS AND INCLUDE SUCH DETAILS ON PLANS.
7. DETAILS SPECIFICALLY FOR CURVED GIRDERS, TRUSS STRUCTURES, GUSSET PLATES, LONGITUDINAL STIFFENERS, AND LATERAL BRACING NOT INCLUDED IN DETAIL 335.01.
8. ADDITIONAL PROJECT SPECIFIC STEEL NOTES MAY BE NEEDED IF NOT COVERED IN SECTION 615 OF THE STANDARD SPECIFICATIONS OR DETAIL NO. 301.01 - BRIDGE PROJECT NOTES.
9. REFER TO SECTION 106.8.6 FOR MORE INFORMATION ON ALLOWABLE ALTERNATIVES TO HIGH STRENGTH ⅞" DIA. BOLTS.

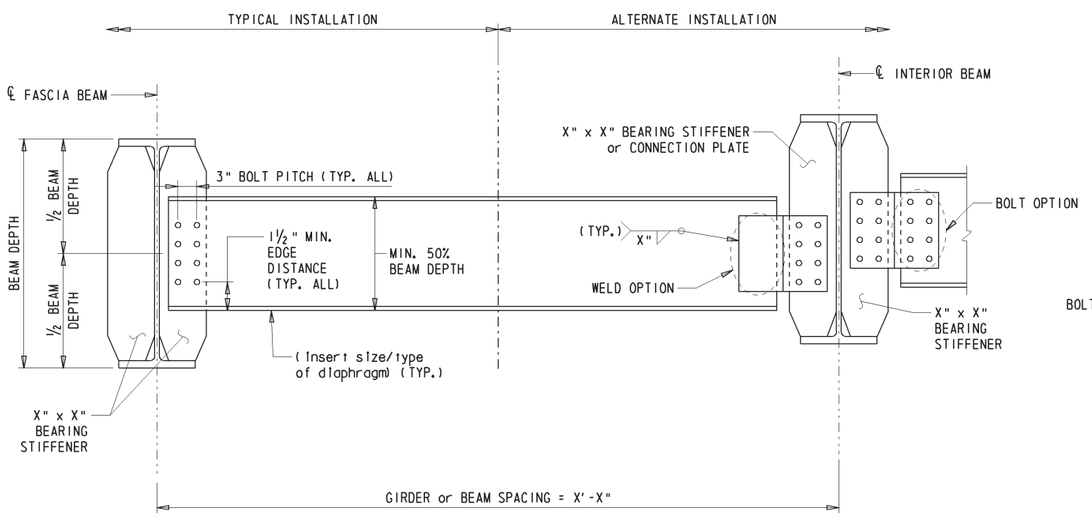

INTERMEDIATE DIAPHRAGM DETAILS FOR ROLLED BEAMS

NOTE: EXAMPLE SHOWN USING MC-SHAPE DIAPHRAGMS. W-BEAM OPTIONAL TO SERVE AS A DIAPHRAGM IF ROLLED BEAM DEPTH GREATER THAN 36 INCHES DEEP.

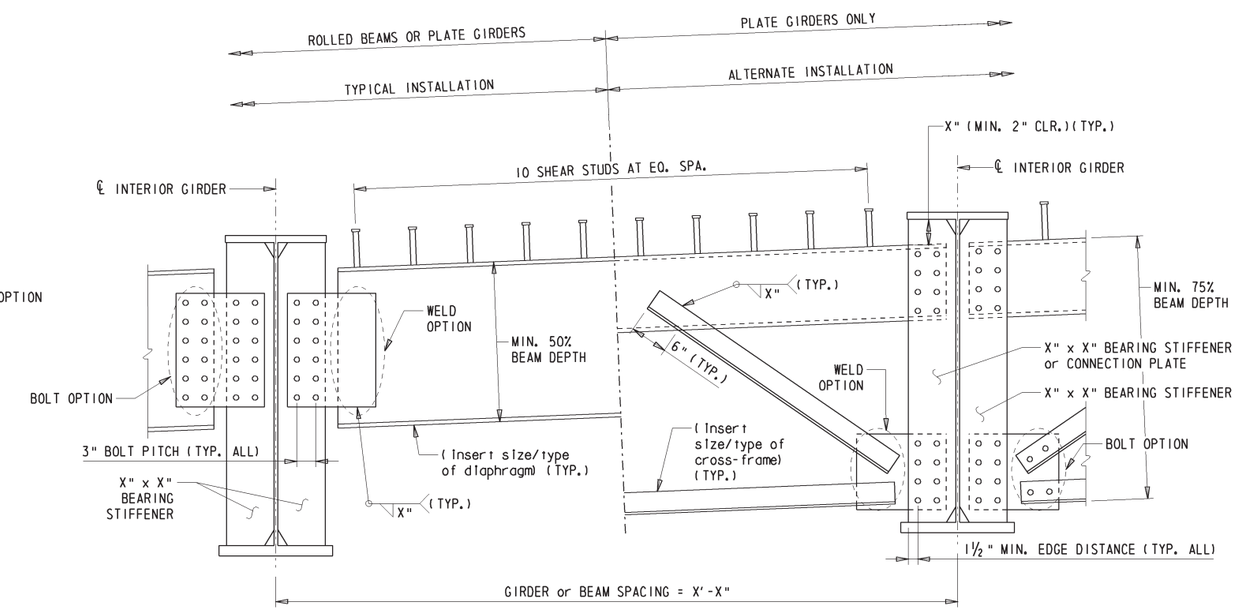

END DIAPHRAGM or END CROSS-FRAME DETAILS

NOTE: EXAMPLE SHOWN USING W-BEAM DIAPHRAGMS AT 'TYPICAL INSTALLATION' AND L-SHAPE AND C-CHANNEL AT 'ALTERNATE INSTALLATION. 'TYPICAL INSTALLATION' IS THE PREFERRED METHOD FOR PURPOSE OF FUTURE JACKING. IN THIS CASE, USE OF MC-CHANNEL OR W-BEAM ARE PREFERRED FOR END DIAPHRAGMS. HOWEVER IF ACCOMMODATIONS FOR FUTURE JACKING CAN BE ACHIEVED UNDER THE GIRDER, THE 'ALTERNATE INSTALLATION' MAY BE CONSIDERED.

DESIGNER NOTES

1. REFER TO SECTION 106.8 FOR GENERAL INFORMATION ON STEEL SUPERSTRUCTURE DESIGN CONSIDERATIONS.
2. REFER TO SECTION 615 IN THE STANDARD SPECIFICATIONS TO ENSURE THERE IS NO NEED TO ADD PROJECT SPECIFIC BEAM NOTES ON BEAM DETAIL SHEETS.
3. REFER TO DETAIL NO. 335.01 - 'STEEL BEAM BRIDGE DETAILS' FOR MORE INFORMATION ON INTERMEDIATE AND END DIAPHRAGMS BETWEEN STEEL BEAMS, SHEAR STUDS, BEARING STIFFENERS, CONNECTION PLATES, AND OTHER MISCELLANEOUS BEAM DETAILS.
4. REFER TO SECTIONS 106.8.5 AND 106.8.8.2 FOR MORE INFORMATION ON INTERMEDIATE DIAPHRAGM, CROSS BRACING, AND END DIAPHRAGM LAYOUT.
5. EXAMPLE USED IN FRAMING PLAN ASSUMES A NINE-GIRDER TWO-SPAN BRIDGE WITH SKEWED LEFT-MOST ABUTMENT AND PIER/RIGHT-MOST ABUTMENT WITH A ZERO SKEW.
6. THE FOLLOWING MUST BE SHOWN ON THE FRAMING PLAN IF PRESENT ON THE BRIDGE: MODIFIED DIAPHRAGMS/UTILITY SUPPORTS FOR CONDUITS (TYPE & SPA.), CONDUITS, LIGHT POLES, AND SCUPPERS.

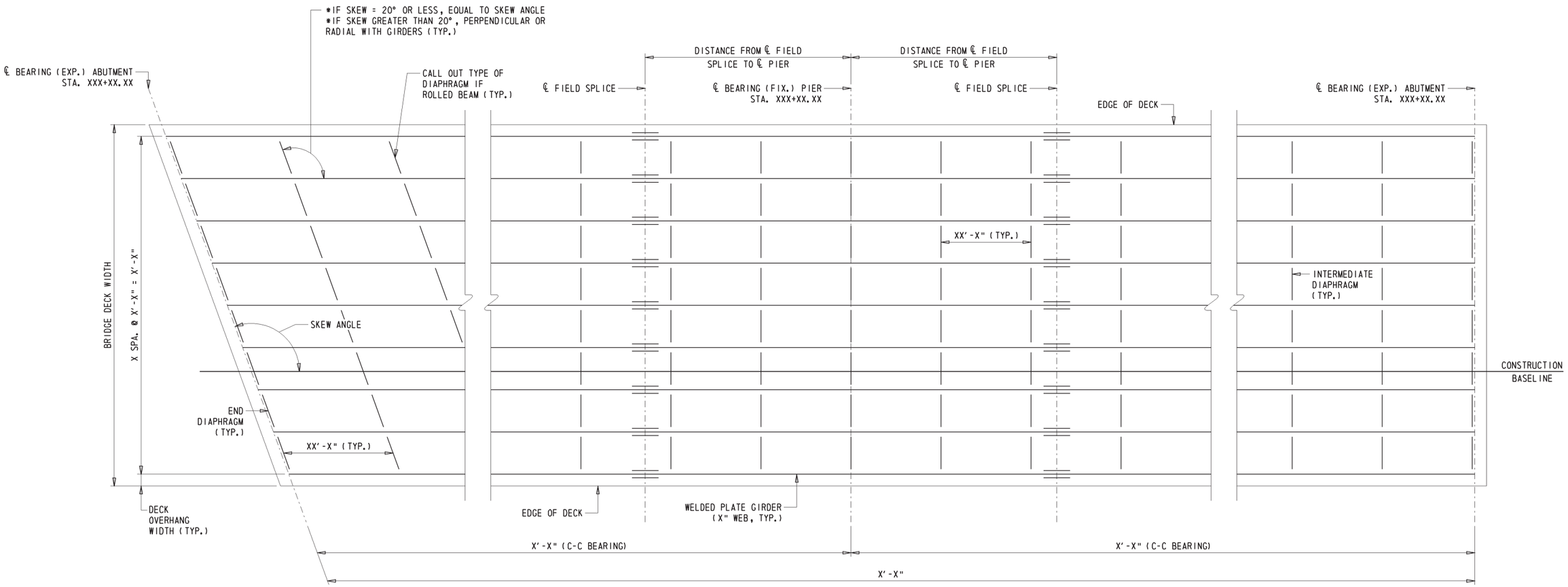

FRAMING PLAN

DELAWARE DEPARTMENT OF TRANSPORTATION **BRIDGE DESIGN MANUAL**	STEEL BEAM FRAMING PLAN DETAILS	NOT TO SCALE	ISSUE DATE 10/01/2015	DETAIL No. 335.02 SHEET No. 1 of 1

STEEL BEAM CAMBER NOTES:

1. ALL GIRDERS SHALL BE CAMBERED FOR DEAD LOAD ORDINATES TO THE DIMENSIONS SHOWN ON THESE PLANS. THE CAMBER TOLERANCE IS ZERO UNDER TO ¾ INCH OVER.
2. AFTER THE ERECTION OF STEEL AND THE CONNECTIONS OF THE STEEL CROSS FRAMES ARE COMPLETE, THE CONTRACTOR SHALL OBTAIN ELEVATIONS AT TENTH POINTS ON THE TOP FLANGES OF ALL GIRDERS TO DETERMINE THE REQUIRED HAUNCH THICKNESS. ALL OF THE DATA SHALL BE SUBMITTED WITH DETAILS OF STAY-IN-PLACE FORMS FOR REVIEW AND APPROVAL BY THE ENGINEER IN THE FIELD.
3. AFTER THE ERECTION OF STEEL AND THE CONNECTIONS OF THE STEEL CROSS FRAMES ARE COMPLETE, THE CONTRACTOR SHALL VERIFY THAT ALL UNDERCLEARANCES ARE SUFFICIENT AFTER SUBTRACTING THE CALCULATED TOTAL DEAD LOAD DEFLECTION.
4. VARY THICKNESS OF HAUNCH TO ACCOUNT FOR ANY INACCURACIES IN CAMBER.

LEGEND:

DLS = DENOTES DEFLECTION DUE TO STRUCTURAL STEEL

DLC = DENOTES DEFLECTION DUE TO CONCRETE DECK SLAB, HAUNCH, & S.I.P. FORMS

SDL = DENOTES DEFLECTION DUE TO BARRIER, SAFETY FENCE & FUTURE WEARING SURFACE

TD&C = DENOTES TOTAL DEAD LOAD DEFLECTION & CAMBER

VCO = DENOTES CAMBER FOR VERTICAL CURVE ORDINATE DUE TO ROADWAY PROFILE

DESIGNER NOTES

1. STEEL BEAM CAMBER DETAILS MUST BE INCLUDED IN ALL PLAN SETS FOR BRIDGES UTILIZING STEEL BEAMS OR STEEL GIRDERS.
2. RELEVANT STEEL BEAM CAMBER NOTES MUST BE INCLUDED IN ALL PLAN SETS FOR BRIDGES UTILIZING STEEL BEAMS OR STEEL GIRDERS. ADD ANY PROJECT-SPECIFIC NOTES AS NECESSARY.
3. THE DEFLECTION AND TOTAL CAMBER TABLE MUST INCLUDE RELEVANT INFORMATION AT TENTH POINTS.
4. THE EXAMPLE CAMBER DIAGRAM AND THE DEFLECTION AND TOTAL CAMBER TABLE AS SHOWN ASSUMES A TWO SPAN BRIDGE WITH 5 GIRDERS. MODIFY THE CAMBER DIAGRAM AND THE DEFLECTION AND TOTAL CAMBER TABLE AS NECESSARY TO ENSURE THE DETAILS ARE PROJECT SPECIFIC.

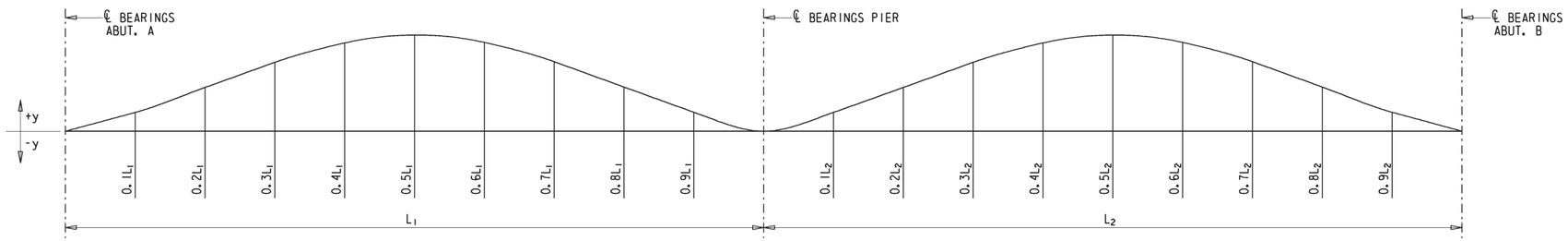

DEFLECTION AND TOTAL CAMBER (INCHES)

PROPOSED GIRDERS		℄ BRG. ABUT. A	0.1L1	0.2L1	0.3L1	0.4L1	0.5L1	0.6L1	0.7L1	0.8L1	0.9L1	℄ BRG. PIER	0.1L2	0.2L2	0.3L2	0.4L2	0.5L2	0.6L2	0.7L2	0.8L2	0.9L2	℄ BRG. ABUT. B
GIRDER 1	DLS	--	--	--	--	--	--	--	--	--	--	--	--	--	--	--	--	--	--	--	--	--
	DLC	--	--	--	--	--	--	--	--	--	--	--	--	--	--	--	--	--	--	--	--	--
	SDL	--	--	--	--	--	--	--	--	--	--	--	--	--	--	--	--	--	--	--	--	--
	TD & C	--	--	--	--	--	--	--	--	--	--	--	--	--	--	--	--	--	--	--	--	--
	VCO	--	--	--	--	--	--	--	--	--	--	--	--	--	--	--	--	--	--	--	--	--
	TD & C + VCO	--	--	--	--	--	--	--	--	--	--	--	--	--	--	--	--	--	--	--	--	--
GIRDER 2	DLS	--	--	--	--	--	--	--	--	--	--	--	--	--	--	--	--	--	--	--	--	--
	DLC	--	--	--	--	--	--	--	--	--	--	--	--	--	--	--	--	--	--	--	--	--
	SDL	--	--	--	--	--	--	--	--	--	--	--	--	--	--	--	--	--	--	--	--	--
	TD & C	--	--	--	--	--	--	--	--	--	--	--	--	--	--	--	--	--	--	--	--	--
	VCO	--	--	--	--	--	--	--	--	--	--	--	--	--	--	--	--	--	--	--	--	--
	TD & C + VCO	--	--	--	--	--	--	--	--	--	--	--	--	--	--	--	--	--	--	--	--	--
GIRDER 3	DLS	--	--	--	--	--	--	--	--	--	--	--	--	--	--	--	--	--	--	--	--	--
	DLC	--	--	--	--	--	--	--	--	--	--	--	--	--	--	--	--	--	--	--	--	--
	SDL	--	--	--	--	--	--	--	--	--	--	--	--	--	--	--	--	--	--	--	--	--
	TD & C	--	--	--	--	--	--	--	--	--	--	--	--	--	--	--	--	--	--	--	--	--
	VCO	--	--	--	--	--	--	--	--	--	--	--	--	--	--	--	--	--	--	--	--	--
	TD & C + VCO	--	--	--	--	--	--	--	--	--	--	--	--	--	--	--	--	--	--	--	--	--
GIRDER 4	DLS	--	--	--	--	--	--	--	--	--	--	--	--	--	--	--	--	--	--	--	--	--
	DLC	--	--	--	--	--	--	--	--	--	--	--	--	--	--	--	--	--	--	--	--	--
	SDL	--	--	--	--	--	--	--	--	--	--	--	--	--	--	--	--	--	--	--	--	--
	TD & C	--	--	--	--	--	--	--	--	--	--	--	--	--	--	--	--	--	--	--	--	--
	VCO	--	--	--	--	--	--	--	--	--	--	--	--	--	--	--	--	--	--	--	--	--
	TD & C + VCO	--	--	--	--	--	--	--	--	--	--	--	--	--	--	--	--	--	--	--	--	--
GIRDER 5	DLS	--	--	--	--	--	--	--	--	--	--	--	--	--	--	--	--	--	--	--	--	--
	DLC	--	--	--	--	--	--	--	--	--	--	--	--	--	--	--	--	--	--	--	--	--
	SDL	--	--	--	--	--	--	--	--	--	--	--	--	--	--	--	--	--	--	--	--	--
	TD & C	--	--	--	--	--	--	--	--	--	--	--	--	--	--	--	--	--	--	--	--	--
	VCO	--	--	--	--	--	--	--	--	--	--	--	--	--	--	--	--	--	--	--	--	--
	TD & C + VCO	--	--	--	--	--	--	--	--	--	--	--	--	--	--	--	--	--	--	--	--	--

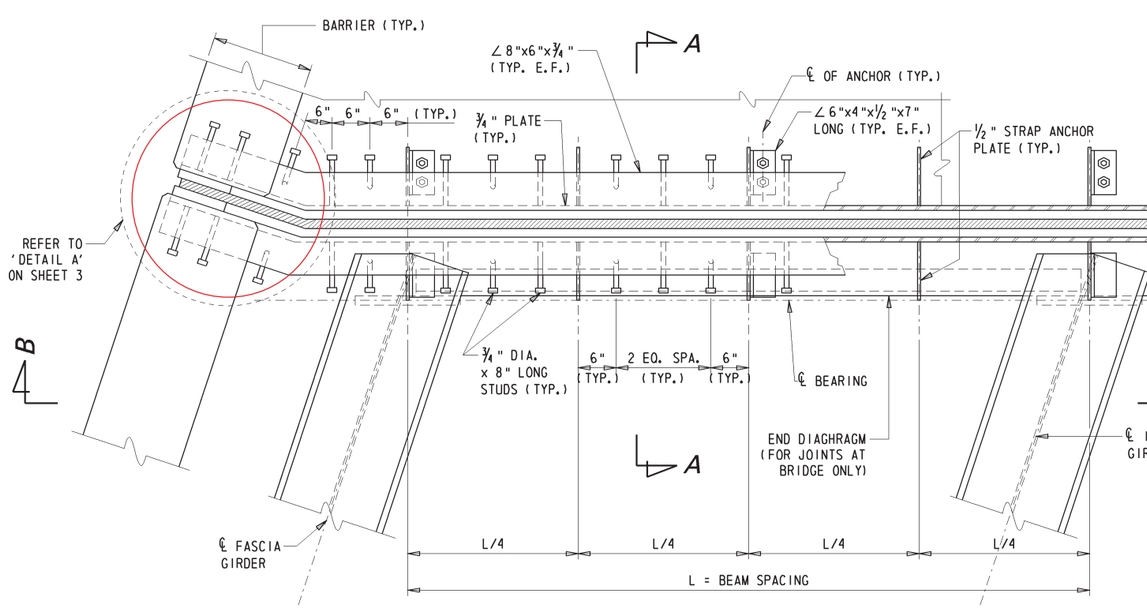

TYPICAL JOINT PLAN WITH SKEW

(EXAMPLE SHOWN USING STEEL GIRDERS TO ABUTMENT BACKWALL)

NOTE: POTENTIAL SHARED USER PATH UTILIZING INTERIOR BARRIER NOT SHOWN FOR CLARITY. REFER TO SECTION B-B.

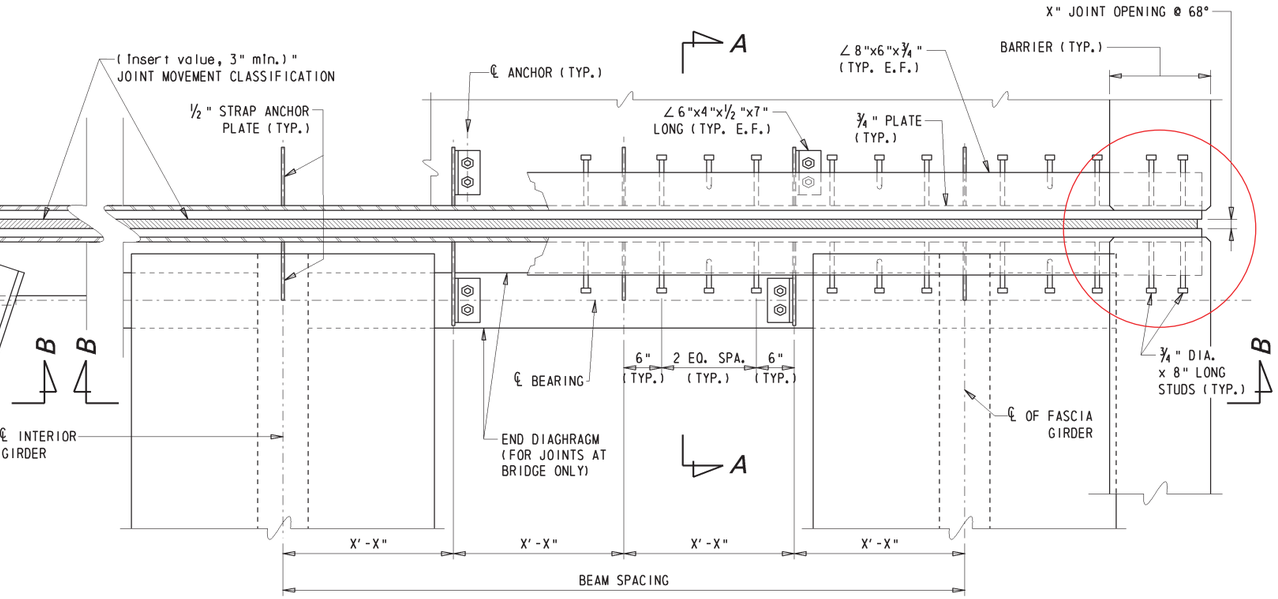

TYPICAL JOINT PLAN WITH NO SKEW

(EXAMPLE SHOWN USING PCEF GIRDERS TO ABUTMENT BACKWALL)

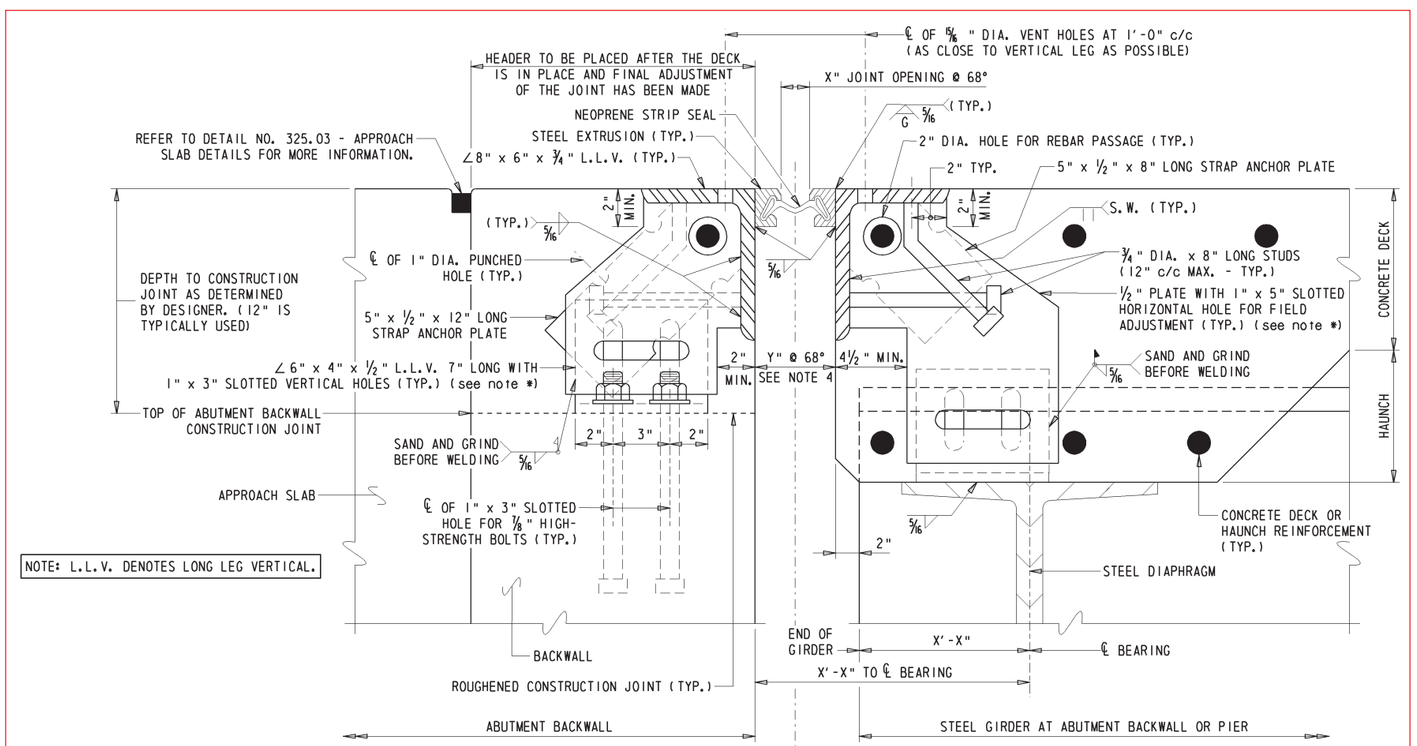

SECTION A-A (STEEL GIRDER)

NOTE: LONGITUDINAL DECK REINFORCEMENT AND SHEAR STUDS NOT SHOWN FOR CLARITY. EXAMPLE DETAIL IN SECTION A-A SHOWS 6"x4"x½" L.L.V. WELDED ONTO THE STEEL DIAPHRAGM. ALTERNATIVELY IT MAY BE BOLTED. IF C-CHANNELS ARE USED AS DIAPHRAGMS, THE FLANGES MUST FACE AWAY FROM THE BACKWALL.

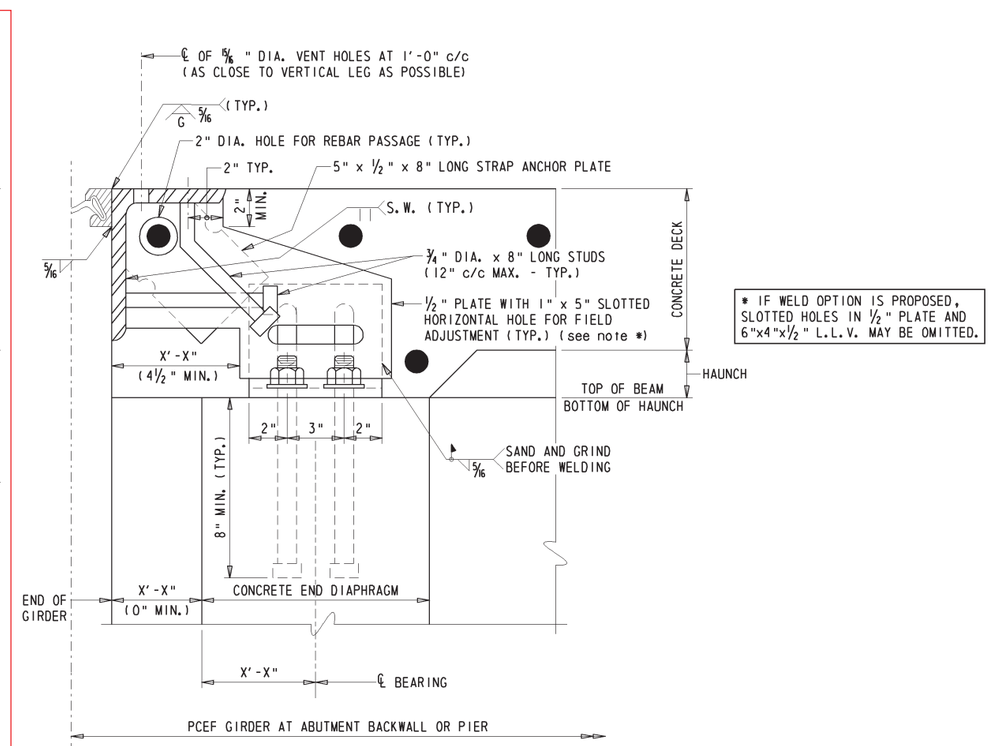

SECTION A-A (HALF-SECTION PCEF GIRDER)

DELAWARE DEPARTMENT OF TRANSPORTATION
BRIDGE DESIGN MANUAL

STRIP SEAL EXPANSION JOINT DETAILS

NOT TO SCALE

ISSUE DATE	
10/01/2015	
10/01/2016	

DETAIL No. 340.01

SHEET No. 1 of 3

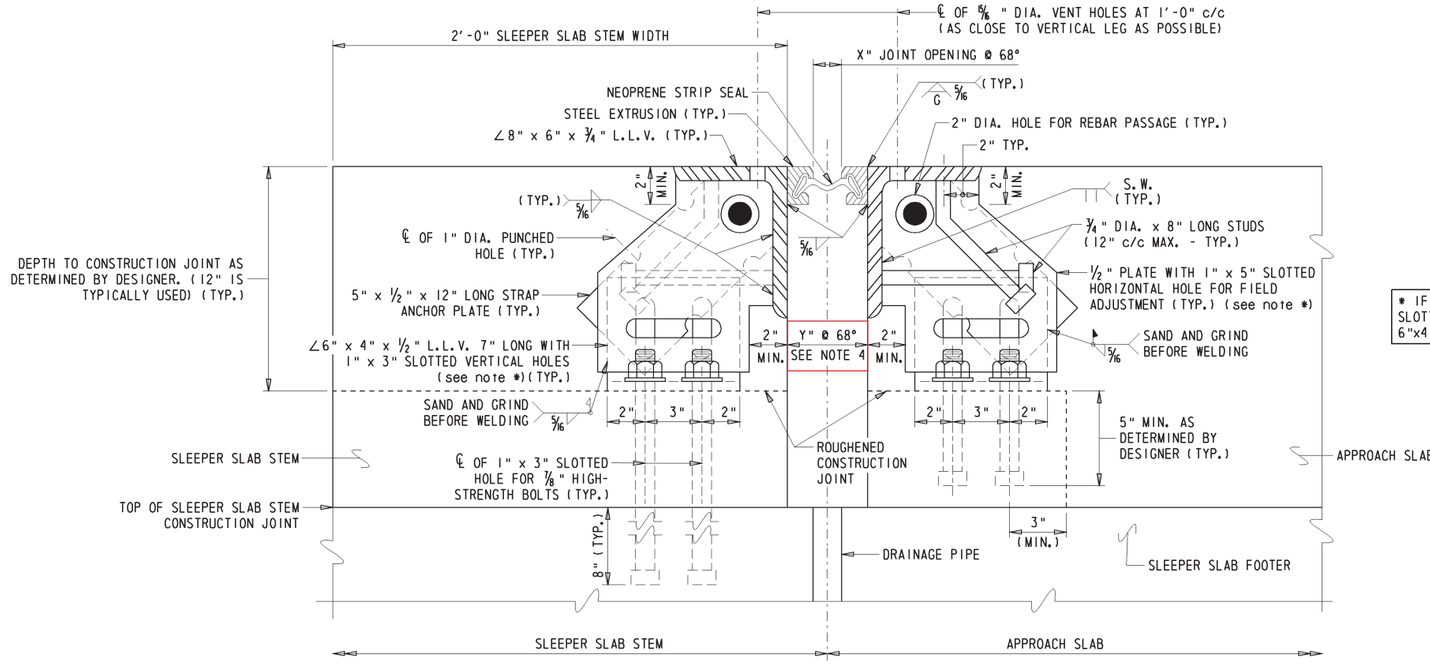

* IF WELD OPTION IS PROPOSED, SLOTTED HOLES IN 1/2" PLATE AND 6"x4"x1/2" L.L.V. MAY BE OMITTED.

SECTION A-A (APPROACH SLAB TO SLEEPER SLAB)

NOTE: REMAINING SLEEPER SLAB AND APPROACH SLAB REINFORCEMENT NOT SHOWN FOR CLARITY. REFER TO DETAIL NO. 325.03 - APPROACH SLAB DETAILS AND 325.05 - SLEEPER SLAB DETAILS FOR MORE INFORMATION.

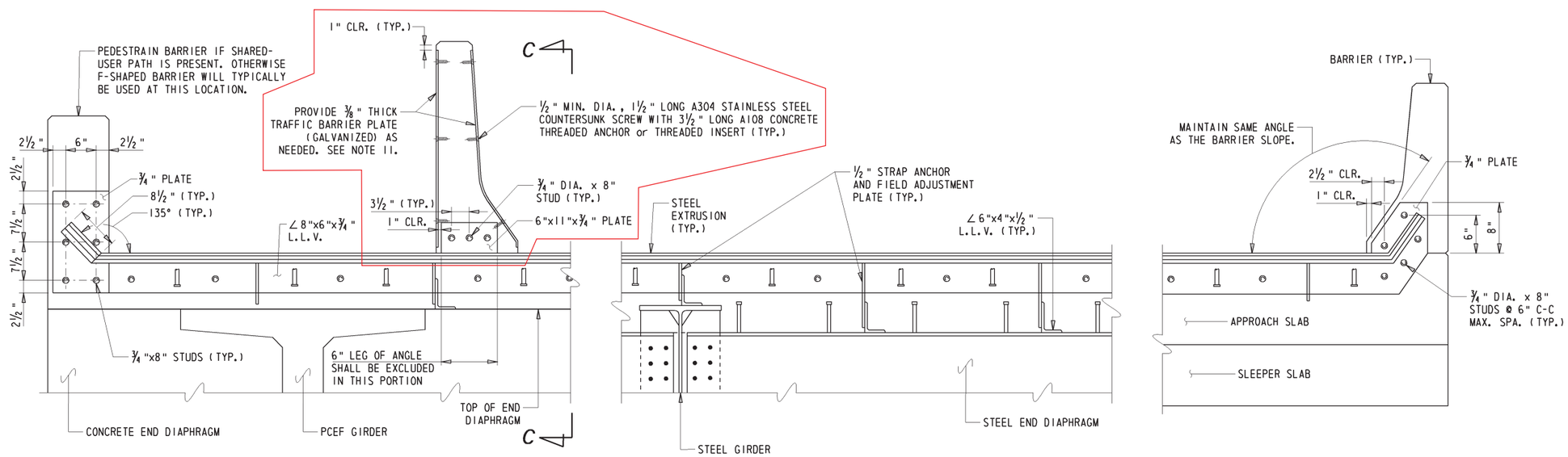

SECTION (B-B)

NOTE: CROSS SLOPE AND ANCHOR BOLTS NOT SHOWN FOR CLARITY. POTENTIAL TRAFFIC BARRIER PLATES SHOWN ONLY AT INTERIOR BARRIER FOR CLARITY. ALSO THE EXAMPLE UTILIZES SHARED USER PATH WITH AN ADDITIONAL BARRIER.

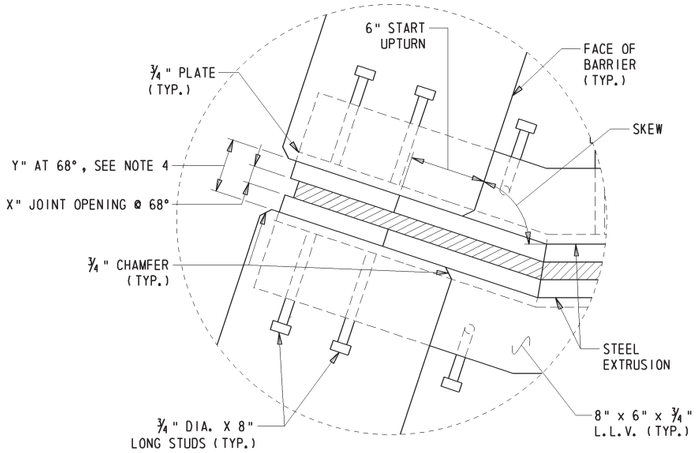

DETAIL A

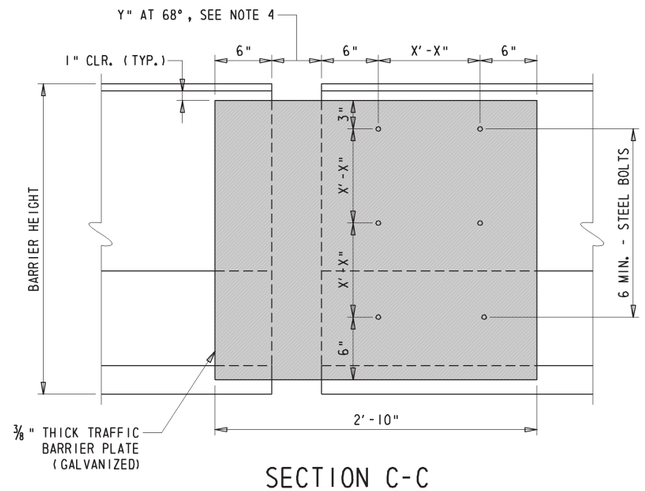

SECTION C-C

NOTE: STRUCTURAL COMPONENTS BELOW BARRIER NOT SHOWN FOR CLARITY.

STRIP SEAL EXPANSION JOINT NOTES

1. STEEL FOR DECK JOINTS AND STEEL EXTRUSIONS SHALL BE AASHTO M270, GR. 36 (ASTM A36) AT MINIMUM.
2. NEOPRENE EXTRUSION TO MEET D-2628-81 MODIFIED, (RECOVERY TESTS EXCLUDED).
3. THE EXPANSION JOINT SHALL BE CAPABLE OF SEALING THE DECK TO PREVENT MOISTURE AND OTHER CONTAMINANTS FROM DESCENDING THROUGH THE JOINT.
4. THE CONTRACTOR SHALL ADJUST THE OPEN JOINT (defined as 'Y') AS REQUIRED BY THE WIDTH OF THE STEEL EXTRUSION USED SO AS TO PROVIDE A (Insert design joint opening)" JOINT OPENING AT 68°F.
5. THE STRIP SEAL SHALL BE INSTALLED IN ONE PIECE ACROSS THE BRIDGE WIDTH. SPLICING OF THE STRIP SEAL IS NOT PERMITTED.
6. THE EXPANSION JOINT SYSTEM IS PAID FOR UNDER (Insert appropriate 'prefabricated expansion joint system' item).
7. ENTIRE EXPANSION DAM SHALL BE PAINTED AFTER FABRICATION USING URETHANE SYSTEM, EXCEPT AS NOTED IN ACCORDANCE WITH (Insert appropriate special provision or specification reference).
8. LUBRICANT-ADHESIVE FOR USE IN INSTALLING AND BONDING NEOPRENE SEAL ELEMENTS TO STEEL JOINT COMPONENTS SHALL BE A ONE QUART MOISTURE-CURING POLYURETHANE AND HYDROCARBON SOLVENT MIXTURE HAVING THE FOLLOWING PHYSICAL PROPERTIES:

AVERAGE WEIGHT, POUNDS PER GALLON	8 +/- 10%
SOLIDS CONTENT	65%
ADHESIVE SHALL REMAIN LIQUID FROM	5°F TO 120°F
FILM STRENGTH, AS PER ASTM D-412	2,000 PSI
ELONGATION	250%

9. HOLES SHALL BE PLACED IN THE RIB PLATES AND STRAP ANCHOR PLATES FOR BAR REINFORCEMENT. IF THIS IS DONE IN THE FIELD AN APPROVED EPOXY-BONDED PAINT SHALL BE USED TO TOUCH-UP THE HOLES. PAYMENT INCIDENTAL TO (Insert appropriate 'prefabricated expansion joint system' item).
10. ANCHOR PLATE AND STEEL EXTRUSION SHALL BE WELDED TO BE WATERTIGHT AT CONSTRUCTION JOINTS. PAYMENT INCIDENTAL TO (Insert appropriate 'prefabricated expansion joint system' item).
11. WHERE TRAFFIC BARRIER PLATES ARE USED:
    -SUCH BARRIERS ARE REQUIRED WHERE THE OPEN JOINT AS DESCRIBED IN NOTE 4 IS FOUR INCHES OR WIDER.
    -BOLTS SHALL BE A304 STAINLESS STEEL COUNTERSUNK SCREW WITH A108 CONCRETE THREADED ANCHOR or THREADED INSERT.
    -HEAD OF BOLTS SHALL BE FLUSH WITH FACE OF STEEL PLATE.
    -THE CONTRACTOR SHALL SUBMIT WORKING DRAWINGS OF TRAFFIC BARRIER PLATES FOR APPROVAL.
12. AT AREAS WHERE STEEL MEMBERS ARE TO BE SPLICED, USE OF COMPLETE JOINT PENETRATION (CJP) AND PARTIAL JOINT PENETRATION (PJP) WELD ARE BOTH PERMITTED. THE THICKNESS OF PJP WELD MUST BE MINIMUM HALF OF THE STEEL MEMBER THICKNESS.
13. (phasing only) THE CONTRACTOR SHALL SUBMIT A WORKING PLAN FOR PLACEMENT OF STRIP SEAL DUE TO PHASING.

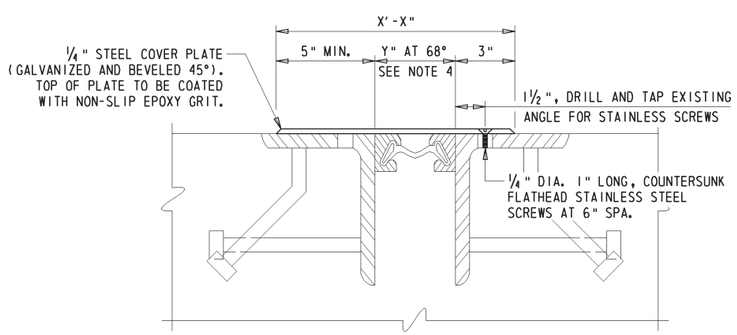

JOINT SECTION AT SIDEWALK

(BRIDGES WITH SIDEWALK)

NOTE:
-ALL STEEL MUST BE ASTM A709, GRADE 36 or 50 AND HOT-DIPPED GALVANIZED IN ACCORDANCE WITH ASTM A123.
-APPLY EPOXY COATING ON BOTH SIDES OF THE STEEL COVER PLATE. THE TOP OF PLATE (WALKING SURFACE) MUST RECEIVE NON-SLIP EPOXY GRIT COATING IN ACCORDANCE WITH ADA A4.5.

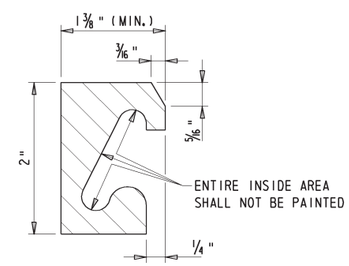

STEEL EXTRUSION DETAIL

DESIGNER NOTES

1. APPLICABLE STRIP SEAL EXPANSION JOINT DETAIL NOTES ARE REQUIRED TO BE SHOWN IN THE PLAN SET.
2. JOINT OPENING TABLE MUST BE SHOWN IN THE PLAN SET.
3. REFER TO SECTIONS 106.6.2 AND 109.7 FOR MORE INFORMATION ON STRIP SEAL EXPANSION JOINT DESIGN.
4. STEEL EXTRUSIONS FOR STRIP SEAL JOINTS MUST BE GALVANIZED IN ITS ENTIRELY AND PAINTED AS DETAILED IN 'STEEL EXTRUSION DETAIL'.
5. MAXIMUM JOINT OPENING FOR USE OF STRIP SEAL EXPANSION JOINTS SHOULD BE LIMITED TO 4 INCHES. IF THE JOINT OPENING IS GREATER THAN 4", CONSIDER USING FINGER OR MODULAR JOINTS.
6. UNDER PLAN VIEWS ON FIRST SHEET, THE EXAMPLE UTILIZES JOINTS ON BRIDGE (CONCRETE DECK TO ABUTMENT BACKWALL). REVISE AS NECESSARY FOR JOINTS AT PIERS OR APPROACH SLAB TO SLEEPER SLAB.
7. BLOCKOUTS ARE NOT INCLUDED IN SECTIONS A-A OF THIS DETAIL. THE USE OF BLOCKOUTS ARE TYPICALLY LIMITED TO DECK JOINT REPLACEMENTS ONLY. BLOCKOUTS ARE NOT TYPICALLY USED FOR NEW DECKS OR FULL DECK REPLACEMENTS.

JOINT OPENING (INCH)

LOCATION	TEMPERATURE (°F)					MOVEMENT CLASSIFICATION
	10	30	50	70	90	
XXXXXXXXXX	X	X	X	X	X	X"
XXXXXXXXXX	X	X	X	X	X	X"
XXXXXXXXXX	X	X	X	X	X	X"

STEEL REINFORCED ELASTOMERIC BEARING NOTES:

1. PROVIDE ALL STEEL REINFORCED ELASTOMERIC BEARINGS IN ACCORDANCE WITH SECTION 623 - 'BEARING DEVICES' OF THE STANDARD SPECIFICATIONS.

2. (steel beams or steel girders only) ANCHOR BOLTS AND WASHERS SHALL BE UNPAINTED A709 GRADE 36 GALVANIZED STEEL. ALL NUTS SHALL BE UNPAINTED A307 GALVANIZED STEEL. SET NUTS 1/4" CLEAR OF SOLE PLATES AND BURR THREADS ABOVE AND BELOW NUTS.

3. (steel beams or steel girders only) USE SWEDGED ANCHOR BOLTS. BOLTS MAY BE CAST-IN-PLACE OR GROUTED IN PREFORMED (SLEEVED OR DRILLED) HOLES. SLEEVED HOLES SHALL BE CORRUGATED TO PREVENT SLIPPAGE. THE PREFORMED HOLES SHALL HAVE A DIAMETER OF 6". WHEN DRILLING HOLES, DO NOT COME INTO CONTACT WITH THE REINFORCING BARS.

4. (steel beams or steel girders only) SOLE PLATES SHALL BE ASTM A 709 GRADE 50W (or specify a higher grade) AND TO BE BEVELED TO MATCH GRADE WHEN GRADE EXCEEDS 1 PERCENT. STEEL SURFACES OF SOLE PLATES TO BE MACHINE FINISHED AS SHOWN IN THE DETAILS, MEASURED IN ACCORDANCE WITH ANSI B46.1.

5. (steel beams or steel girders only) SOLE PLATES SHALL MEET A FLATNESS REQUIREMENT OF 0.5 PERCENT IN THE DIRECTION BEING MEASURED (WIDTH, LENGTH, AND DIAGONALS) MAXIMUM, BUT NOT TO EXCEED 1/8 INCH.

6. BEARING SHALL BE PLACED NORMAL TO CENTERLINE OF BEAM.

7. (steel beams or steel girders only) FILL SLOTS AND HOLES AROUND ANCHOR BOLTS WITH AN APPROVED NON-HARDENING CAULKING COMPOUND OR ELASTIC JOINT SEALER.

8. (steel beams or steel girders only) FOR EXPANSION BEARINGS:
   -USE (Insert value 5/8" larger than bolt dia.)" x (min. 3" as per design) SLOTS IN SOLE PLATE AND 3/8" x 3" x (min. 5 1/2" as per design) WASHERS WITH (Insert value 1/16" larger than bolt dia.)" DIA. HOLE IN WASHERS.

   FOR FIXED BEARINGS
   -USE (Insert value 5/8" larger than bolt dia.)" DIA. HOLES IN SOLE PLATE AND 3/8" x 3" DIA. WASHERS WITH (Insert value 1/16" larger than bolt dia.)" DIA. HOLE IN WASHER.

9. (typical for projects that have no need to secure against walking) STEEL REINFORCED ELASTOMERIC BEARINGS SHALL BE ATTACHED TO THE TOP OF MASONRY PAD or TOP OF CONCRETE PEDESTAL WITH AN APPROVED EPOXY ADHESIVE IN ACCORDANCE WITH SECTION 623.03(C) OF THE STANDARD SPECIFICATIONS IN SUCH A WAY THAT VISIBLE CONCRETE SURFACES WILL NOT BE STAINED. ENSURE THE EPOXY ADHESIVE HAS SET PRIOR TO PLACEMENT OF BEAMS.

10. (modify as needed) PAYMENT FOR FABRICATION AND INSTALLATION OF STEEL REINFORCED ELASTOMERIC BEARINGS, ANCHOR BOLTS, NUTS, WASHERS, AND SOLE PLATES SHALL BE INCIDENTAL TO (Insert appropriate beam item number).

ELASTOMERIC BEARING NOTES:

1. X TOTAL ELASTOMERIC BEARINGS REQUIRED.

2. ALL ELASTOMERIC BEARINGS SHALL BE 50 MIN. DUROMETER IN ACCORDANCE WITH REQUIREMENTS SPECIFIED IN SECTION 623 OF THE STANDARD SPECIFICATIONS.

3. ELASTOMERIC BEARINGS SHALL BE ATTACHED TO THE TOP OF ABUTMENT SEAT and/or TOP OF PIER CAP WITH AN APPROVED EPOXY ADHESIVE IN ACCORDANCE WITH SECTION 623.03(C) OF THE STANDARD SPECIFICATIONS IN SUCH A WAY THAT VISIBLE CONCRETE SURFACES WILL NOT BE STAINED. ENSURE THE EPOXY ADHESIVE HAS SET PRIOR TO PLACEMENT OF BEAMS.

4. PAYMENT FOR FABRICATION AND INSTALLATION OF ELASTOMERIC BEARINGS SHALL BE INCIDENTAL TO (Insert appropriate beam item number).

STEEL REINFORCED ELASTOMERIC BEARING TABLE

LOCATION	BEARING DESIGNATION						LAMINATED ELASTOMERIC BEARING					
	MARK	TYPE	NEOPRENE HARDNESS (SHORE A)	TOTAL NO. REQD.	CAPACITY PER PAD		DIMENSION				INTERIOR LAYERS	TOTAL PAD THICKNESS 'T'
					REACTION ⊗	MOVEMENT ⊠	'L'	'W'	SHAPE FACTOR ▲	AREA (IN²)		
ABUTMENT A	EX #	EXP.	60± 5 DURO	--	---- KIP	----	---	---	---	----	--	----
PIER	FX #	FIX.	60± 5 DURO	--	---- KIP	N/A	---	---	---	----	--	----
ABUTMENT B	EX #	EXP.	60± 5 DURO	--	---- KIP	----	---	---	---	----	--	----

LEGEND:

⊗ MAX. UN-FACTURED SERVICE 1 REACTION (W/O DYNAMIC LOAD ALLOWANCE).

⊠ TEMPERATURE MOVEMENT.

▲ SHAPE FACTOR.

DESIGNER NOTES

1. REFER TO SECTION 106.10 FOR MORE INFORMATION ON DESIGN AND DETAILING OF STEEL-REINFORCED ELASTOMERIC BEARINGS AND ANCHORAGE TO STRUCTURE (SOLE PLATES, ANCHOR RODS, ETC.)
2. REFER TO SECTION 623 IN THE STANDARD SPECIFICATIONS, CHAPTER 18 OF CURRENT AASHTO LRFD BRIDGE CONSTRUCTION SPECIFICATIONS, AND CHAPTER 14 OF CURRENT AASHTO LRFD BRIDGE DESIGN SPECIFICATIONS FOR MORE INFORMATION ON DESIGN AND FABRICATION OF ELASTOMERIC BEARINGS (BOTH STEEL REINFORCED AND UNREINFORCED).
3. ALL DETAILS, 'STEEL REINFORCED ELASTOMERIC BEARING NOTES', AND 'STEEL REINFORCED ELASTOMERIC BEARING TABLE' WITH EXCEPTION OF THE FOLLOWING:
   - '1" THICK 50 MIN. DUROMETER ELASTOMERIC BEARING DETAILS'
   - 'ELASTOMERIC BEARING NOTES'
   AS SHOWN ON THIS SHEET ARE INTENDED FOR SPREAD BEAMS, AND MUST BE SHOWN ON PLAN SHEETS. MODIFY DETAILS, TABLE, AND NOTES ON THE PLAN SHEETS AS NECESSARY TO BE PROJECT-SPECIFIC.
4. FOR ADJACENT BEAMS, THE DESIGNER HAS THE OPTION TO USE 1" THICK 50 MIN. DUROMETER ELASTOMERIC BEARINGS WITH 8" LENGTH AND WIDTH EQUAL TO THE BEAM WIDTH MINUS 2" OR DESIGN A SMALLER (AREA-WISE) STEEL REINFORCED ELASTOMERIC BEARINGS. THE STANDARD PRACTICE IS TO USE THE FIRST OPTION (1" THICK 50 MIN. DUROMETER ELASTOMERIC BEARINGS). NOTE THAT 1" THICK ELASTOMERIC BEARINGS ARE UNREINFORCED, AND IF USED, SUCH DETAILS AND THE 'ELASTOMERIC BEARING NOTES' AS SHOWN ON THIS SHEET MUST BE INCLUDED IN PLAN SHEETS.
5. EXAMPLE USED FOR 'STEEL REINFORCED ELASTOMERIC BEARING TABLE' ASSUMES A TWO SPAN BRIDGE WITH ONE FIXED BEARING LINE AT PIER.
6. THE ELASTOMER COMPOUND FOR BRIDGES IN DELAWARE ARE TYPICALLY CLASSIFIED AS BEING OF LOW TEMPERATURE GRADE 3, WHICH TRANSLATES TO HARDNESS (SHORE A) OF 60. USE OF ANY OTHER GRADES IS NOT RECOMMENDED, AND WILL NEED TO BE JUSTIFIED. A MINIMUM OF 50 DUROMETER IS ALLOWED FOR UNREINFORCED ELASTOMERIC BEARINGS FOR PROJECTS UTILIZING ADJACENT BEAMS.
7. THE DESIGNER SHALL EVALUATE THE NEED FOR PERMANENTLY SECURING BEARING PADS FROM 'WALKING'. THE DETAILS SHOWN ON THIS SHEET DO NOT INCLUDE THESE MEASURES, BUT IF USED, THESE DETAILS MUST BE INCLUDED IN PLAN SETS. REFER TO SECTION 106.10.9 FOR MORE INFORMATION.
8. FOR MORE INFORMATION ON ALLOWABLE ALTERNATIVE BLOCKOUT SIZES, REFER TO SECTIONS 106.10.9.2, 107.4.1.5.3, AND 107.5.3. NOTE THAT POTENTIAL ANCHOR RODS FOR MASONRY PLATES NOT SHOWN IN THIS DETAIL.

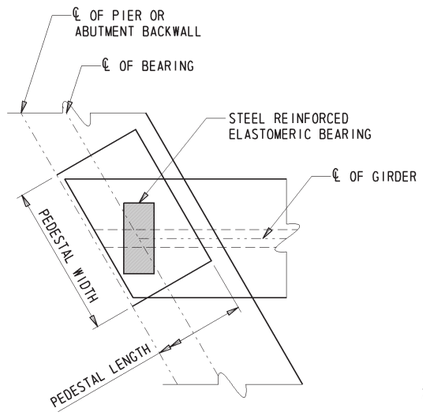

PIER BEARING DETAIL

(PCEF CONCRETE GIRDER)

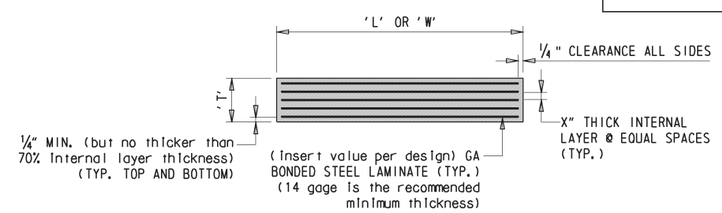

STEEL REINFORCED ELASTOMERIC BEARING ELEVATION

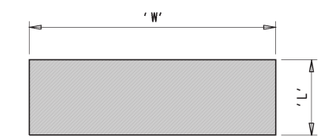

STEEL REINFORCED ELASTOMERIC BEARING PLAN

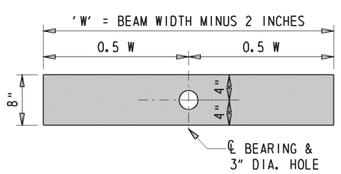

1" THICK 50 MIN. DUROMETER ELASTOMERIC BEARING DETAILS

(ADJACENT BEAMS ONLY)

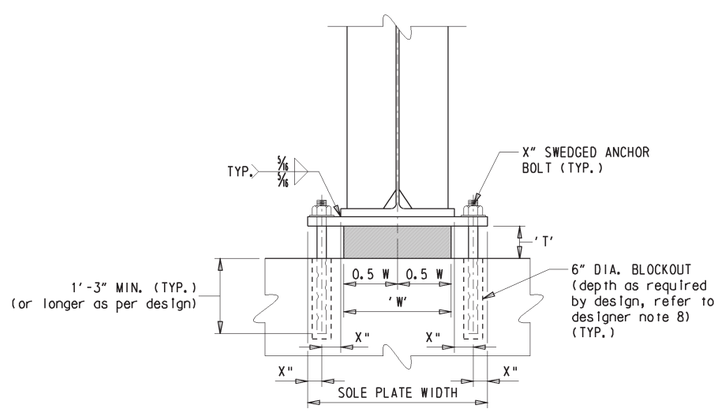

PIER BEARING ELEVATION

(STEEL BEAM or STEEL GIRDER)

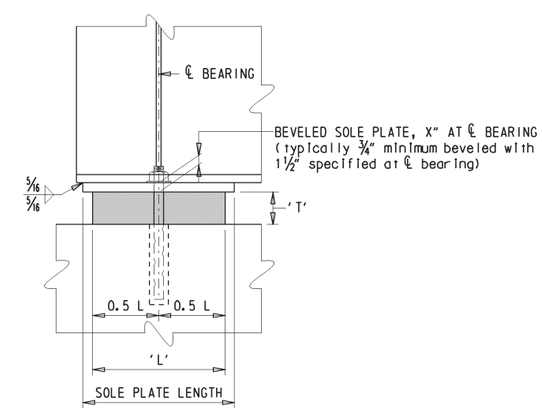

PIER BEARING SIDE ELEVATION

(STEEL BEAM or STEEL GIRDER)

POT BEARING GENERAL NOTES:

1. PROVIDE MATERIALS AND WORKMANSHIP IN ACCORDANCE WITH DELDOT STANDARD SPECIFICATIONS AND ANSI/AASHTO/AWS/D1.5 BRIDGE WELDING CODE.
2. SANDBLAST IN ACCORDANCE WITH SSPC-SP10 TO REMOVE MILL SCALE FROM BEARINGS.
3. GRIND SMOOTH ALL STEEL SURFACES AND EDGES AND REMOVE ANY SHARP PROTRUSIONS. FABRICATION TOLERANCES AND THE LIMITATIONS ON SURFACE FINISH WILL BE IN ACCORDANCE WITH DELDOT STANDARD SPECIFICATIONS.
4. PAINT ALL STEEL SURFACES IN ACCORDANCE WITH SECTION 616 OF DELDOT STANDARD SPECIFICATIONS. APPLY ALL COATS IN THE FABRICATION SHOP ONLY. DO NOT PAINT PTFE, STAINLESS STEEL OR THE INSIDE OF THE POT. APPLY ONLY PRIME COAT TO THE CONTACT AREA BETWEEN BEAM BOTTOM FLANGE AND SOLE PLATE AND TO THE BOTTOM SIDE OF THE MASONRY PLATE.
5. ROUND ALL PTFE CORNERS TO ACCOMMODATE THE MACHINED RECESS IN STEEL GUIDE PLATE / PISTON.
6. ETCH PTFE ON ONE SIDE FOR BONDING INTO THE MACHINED RECESS.
7. PTFE ON THE SIDE OF GUIDE PLATE MUST BE PIGMENTED.
8. PRIOR TO THE APPLICATION OF ADHESIVE, CLEAN ALL MATING STEEL AND PTFE SURFACES BY GRIT BLASTING AND DEGREASING. APPLY ADHESIVE AS PER THE MANUFACTURER'S RECOMMENDATION.
9. LUBRICATE ALL SURFACES OF NEOPRENE DISC WITH SILICONE GREASE IN ACCORDANCE WITH MILITARY SPECIFICATION MIL-S-8660.
10. CUT FLAT BRASS SEALING RING ENDS AT 45° ANGLE WITH A MAXIMUM GAP OF 0.05". STAGGER THE OPENINGS IN THE BRASS RINGS 120° APART.
11. MARK THE THICKER EDGE OF THE SOLE PLATE AS SUCH FOR THE PURPOSE OF FIELD IDENTIFICATION. PLACE MARK ON THE EDGE OF SOLE PLATE SO THAT IT WILL BE VISIBLE AFTER BEARING INSTALLATION. IN THE CASE OF A SOLE PLATE WITH A COMPOUND BEVEL, PLACE THE MARK ON EITHER EDGE OF THE THICKEST SOLE PLATE CORNER.
12. MARK CENTERLINE OF GUIDED AND NON-GUIDED POT BEARINGS ON THE SIDES OF MASONRY PLATE AND SOLE PLATE. THE CENTERLINE IDENTIFICATION MARKS WILL BE USEFUL TO LOCATE OFFSET DISTANCES IN THE FIELD. USE INDELIBLE INK TO PLACE ALL MARKS.
13. MARK EACH BEARING WITH THE NAME OF THE MANUFACTURER AND TYPE OR MODEL NUMBER. PLACE THE IDENTIFICATION MARK IN A PERMANENT MANNER AND LOCATION SO THAT IT IS VISIBLE AFTER ERECTION.
14. WHEN THE POT IS RECESSED INTO THE MASONRY PLATE, SEAL AROUND THE POT PERIMETER WITH AN APPROVED CAULKING COMPOUND IN THE SHOP AFTER PAINT COATING HAS DRIED.
15. THE CONTRACTOR IS RESPONSIBLE TO NOTIFY THE ENGINEER OF ANY PROPOSED VARIATION FROM BEARING DIMENSIONS PROVIDED HEREIN DURING FABRICATION.
16. ENSURE ALL BEARING SURFACES, INCLUDING THE BEARING SEAT, ARE LEVEL PRIOR TO INSTALLATION OF POT BEARINGS UNLESS NOTED OTHERWISE.
17. TEST ONE BEARING PER TYPE OR PER LOT SIZE OF 25 FOR A HORIZONTAL FORCE CAPACITY PRIOR TO SHIPMENT.

MATERIALS:

1. STRUCTURAL STEEL:
   - MATERIAL 4" THICK OR LESS - AASHTO M270/ M 270M (ASTM A709/ A709M), GRADE 50
   - MATERIAL GREATER THAN 4" THICK - ASTM A572/A572M, GRADE 50
2. ANCHOR BOLTS: ASTM F1554, GRADE 55
3. NUTS: ASTM A563/ A 563M, GRADE DH
4. WASHERS: ASTM F436/ F436M, TYPE 1
5. MECHANICAL GALVANIZATION OF ANCHOR BOLTS, NUTS AND WASHERS: ASTM B695.
6. STAINLESS STEEL: ASTM A240, GRADE 30, TYPE 304 WITH AN ANSI 0.02 mil SURFACE FINISH OR LESS.
7. FLAT BRASS SEALING RINGS: ASTM B36 (HALF HARD) SPECIFICATION.
8. ELASTOMERIC DISC: VIRGIN PLAIN NEOPRENE OR NATURAL RUBBER WITH HARDNESS OF 50 DUROMETER (+/- 10) PER AASHTO M251.
9. PTFE SHEET: MADE FROM VIRGIN TFE RESIN PER ASTM D4894.
   - MAIN SLIDING SURFACE PTFE - UNFILLED, DIMPLED AND LUBRICATED. DIMPLES MUST HAVE A MINIMUM EDGE DISTANCE OF 1/2" AND CONFORM TO AASHTO LRFD, SECTION 14.7.2.
   - GUIDE BAR SURFACE PTFE - PIGMENTED, FILLED OR UNFILLED.
10. SEAL AROUND THE POT PERIMETER WITH APPROVED CAULK.
11. BEDDING MATERIAL: ASTM D378.

MATERIAL DESIGN PARAMETERS:

1. ALLOWABLE PRESSURE IN ELASTOMER AND PTFE:

   MAXIMUM = 3500 psi ELASTOMER & PTFE
   MINIMUM = 700 psi ELASTOMER

2. COEFFICIENT OF FRICTION BETWEEN PTFE AND STAINLESS STEEL: 0.18
3. CONCRETE BEARING STRENGTH: f'c = 4500 psi

ANCHOR BOLT INSTALLATION:

1. IF BLOCKOUTS ARE USED, REMOVE BLOCKOUT FORM AND DEBRIS FROM HOLE PRIOR TO GROUTING. INSTALL USING APPROVED NON-SHRINK GROUT IN ACCORDANCE WITH DELDOT STANDARD SPECIFICATIONS AND PER MANUFACTURER'S RECOMMENDATIONS. DO NOT GROUT UNTIL ALL GIRDER UNITS ARE PROPERLY ALIGNED.
2. PREVENT WATER FROM ACCUMULATING IN THE PREFORMED ANCHOR BOLT HOLES OR STANDARD PIPE AND ENSURE THE HOLES ARE COMPLETELY FILLED WITH GROUT.

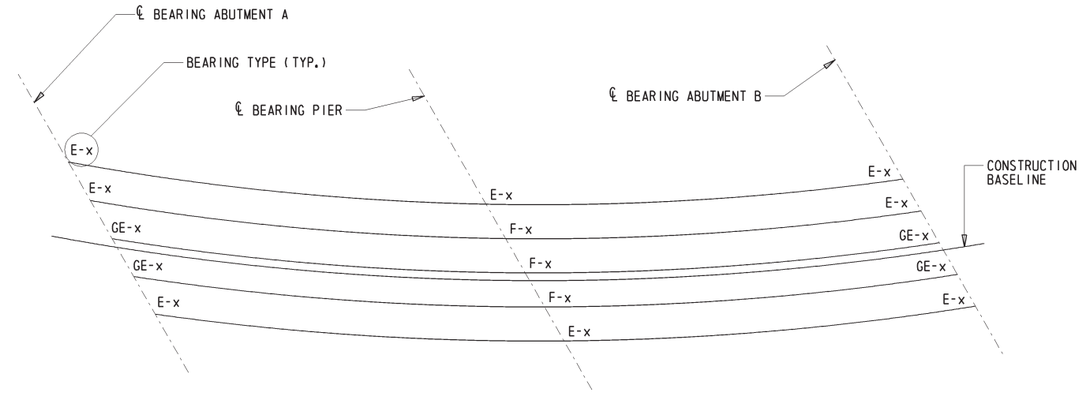

BEARING LAYOUT PLAN

EXAMPLE SHOWN USING 2-SPAN 5-CURVED STEEL GIRDERS ON SKEW

LEGEND:
F - DENOTES FIXED
GE - DENOTES GUIDED
E - DENOTES NON-GUIDED

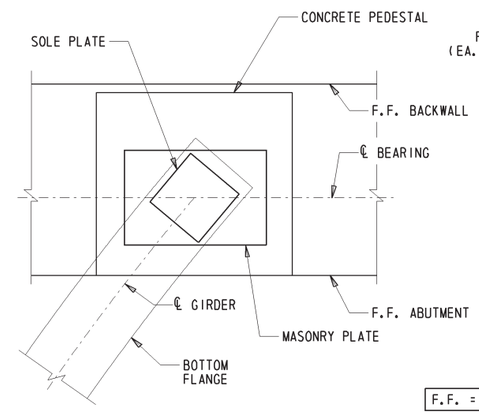

SOLE AND MASONRY PLATE ORIENTATION AT ABUTMENTS

EXAMPLE SHOWN USING 'BEARING LAYOUT PLAN' ON THIS SHEET

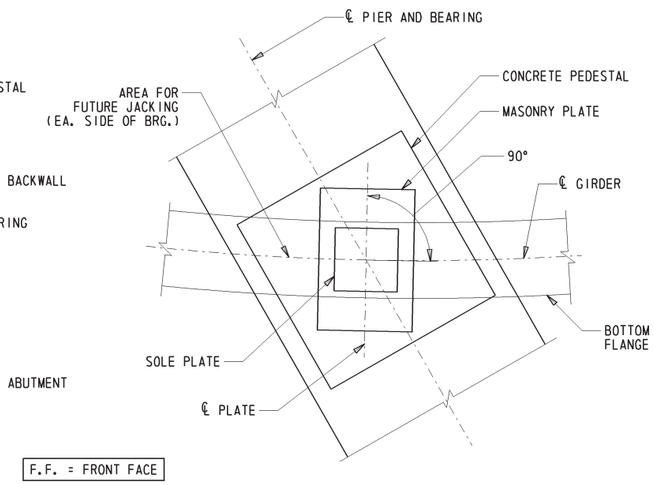

F.F. = FRONT FACE

SOLE AND MASONRY PLATE ORIENTATION AT PIER

EXAMPLE SHOWN USING 'BEARING LAYOUT PLAN' ON THIS SHEET

POT BEARING DESIGN LRFD SPECIFICATIONS												
BEARING TYPE	AASHTO LRFD LIMIT STATES	DESIGN LOADS (KIPS)										
		VERTICAL								HORIZONTAL *		
		DL		LL + IMPACT		WIND		TOTAL		TRANSVERSE	LONGITUDINAL	RESOLUTION
		MIN.	MAX.	MIN.	MAX.	MIN.	MAX.	MIN.	MAX.			
GE-x	SERVICE I	-	-	-	-	-	-	-	-	-	-	-
E-x	SERVICE I	-	-	-	-	-	-	-	-	-	-	-
F-x	SERVICE I	-	-	-	-	-	-	-	-	-	-	-

* example note based on 'bearing layout plan' on this sheet: TRANSVERSE FORCE REFLECTS THE TOTAL TRANSVERSE FORCE PER BEARING LINE. BEARINGS DESIGNED SUCH THAT ALL TRANSVERSE FORCES CAN BE RESISTED BY ONE GUIDED OR FIXED BEARING. THE LONGITUDINAL LOADS AT THE FIXED BEARING LINE AT THE PIER ARE SHARED AMONG THE THREE FIXED BEARINGS. THE LONGITUDINAL FORCE PROVIDED REFLECTS THE FORCE PER BEARING.

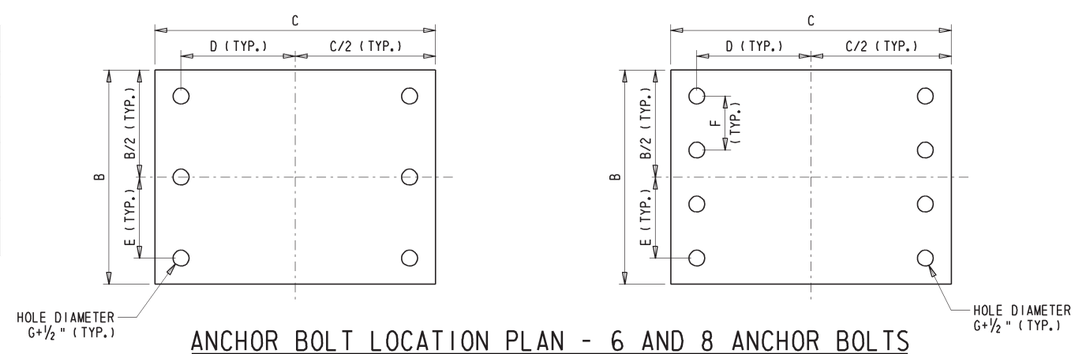

ANCHOR BOLT LOCATION PLAN - 6 AND 8 ANCHOR BOLTS

FIXED

TYPE	QTY.	MASONRY PLATE						ANCHOR BOLT		SOLE PLATE				POT						NEOPRENE DISC			PISTON				BEARING HEIGHT*
		A	B	C	D	E	F	QTY.	G	H	I	J	K	L	M	N	O	P	Q	R	S	T	U	V	W	X	PP
F-x	-	-	-	-	-	-	-	-	-	-	-	-	-	-	-	-	-	-	-	-	-	-	-	-	-	-	-

* BEARING HEIGHT INCLUDES 1/8" FABRIC REINFORCED ELASTOMERIC PAD

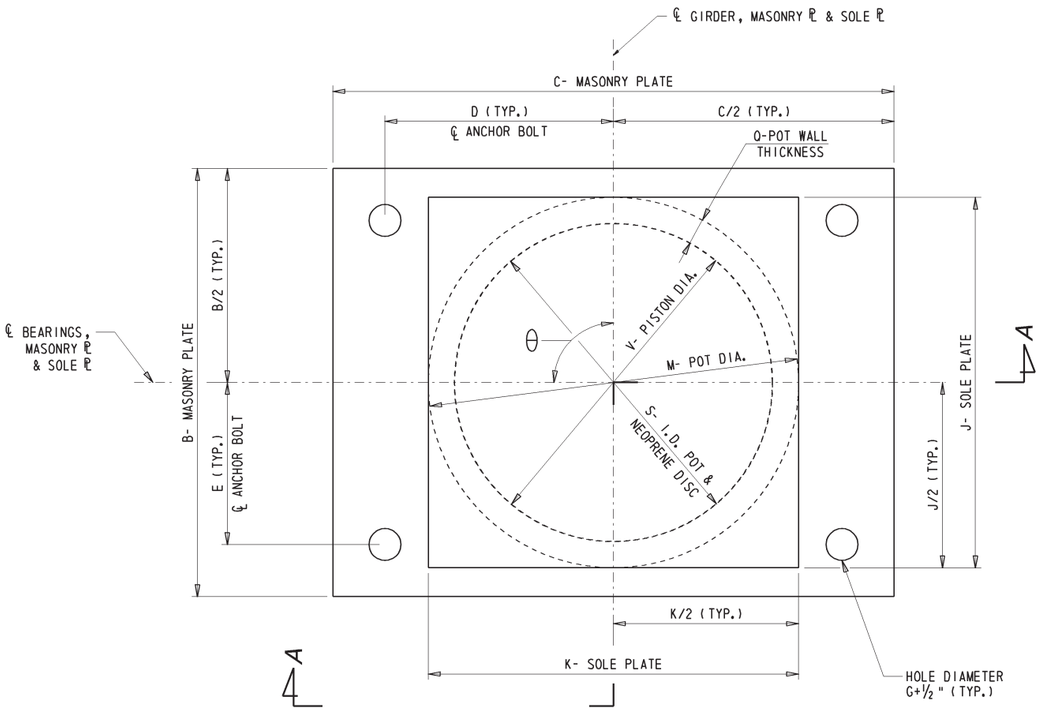

FIXED POT BEARING PLAN

ZERO SKEW SHOWN FOR CLARITY. ANY SKEW GREATER THAN ZERO MUST BE SHOWN ON THE PLAN VIEW. EXAMPLE SHOWN USING 4 ANCHOR BOLTS. REFER TO THE ANCHOR BOLT LOCATION PLAN FOR MORE INFORMATION.

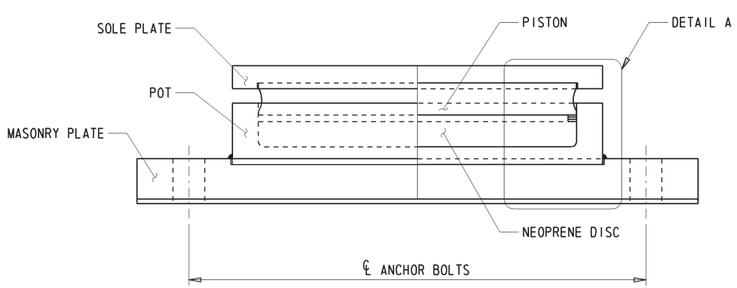

SECTION A-A

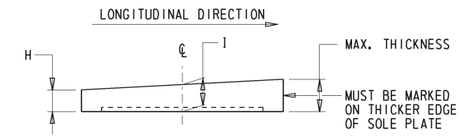

BEVELED SOLE PLATE DETAIL

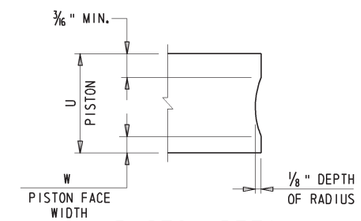

PISTON DETAIL

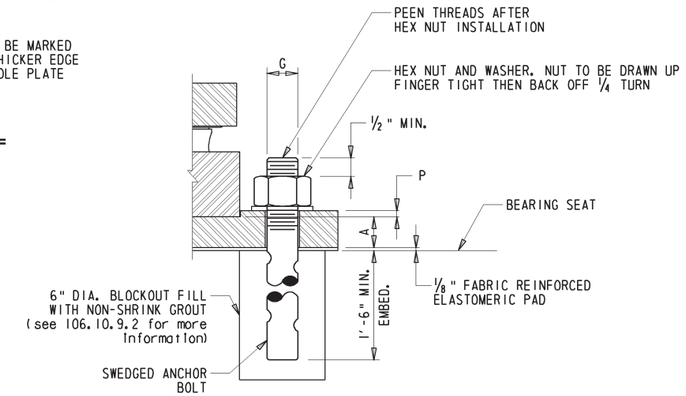

ANCHOR BOLT DETAIL

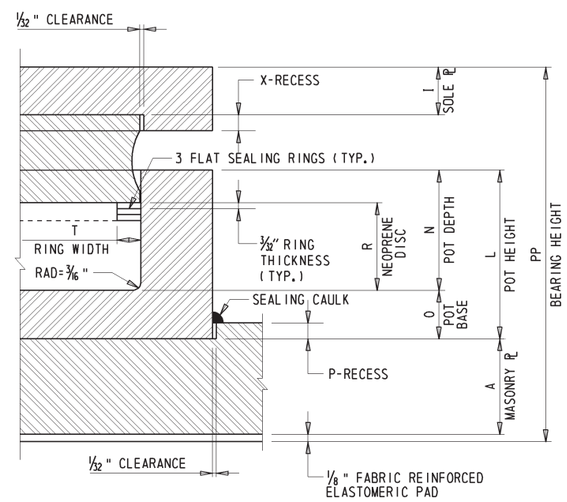

DETAIL A

TYPE	SUBSTRUCTURE UNIT	GIRDER	θ
F-x	-----	-	-
		-	-
	-----	-	-
		-	-

BEARING TYPE F-x

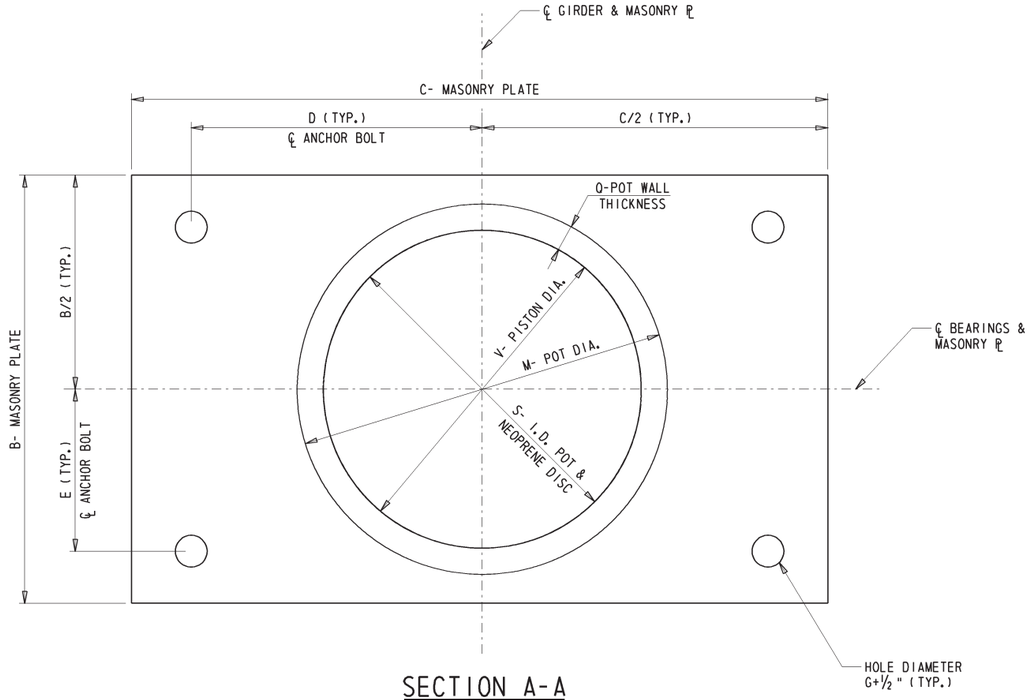

SECTION A-A

ZERO SKEW SHOWN FOR CLARITY. ANY SKEW GREATER THAN ZERO MUST BE SHOWN ON THE PLAN VIEW. EXAMPLE SHOWN USING 4 ANCHOR BOLTS. REFER TO THE ANCHOR BOLT LOCATION PLAN FOR MORE INFORMATION.

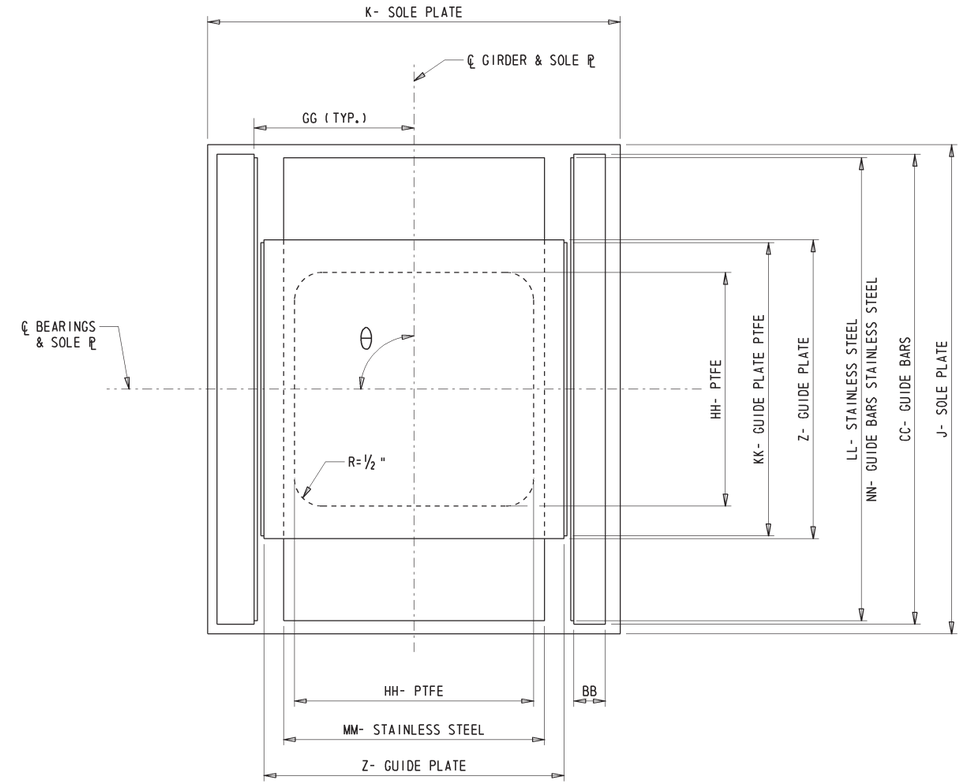

SECTION B-B

PISTON NOT SHOWN FOR CLARITY

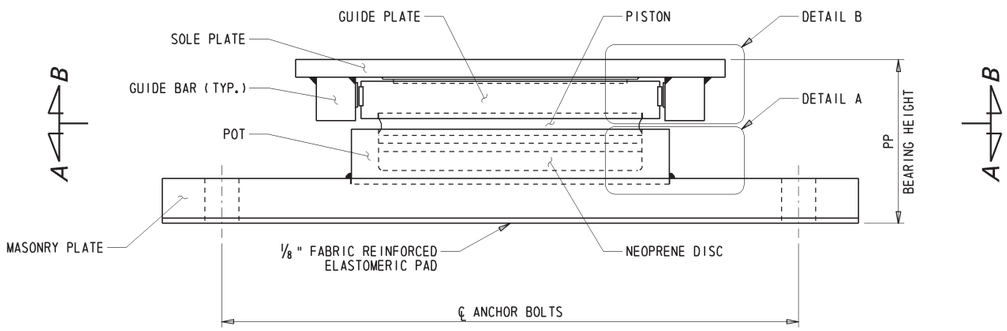

GUIDED EXPANSION BEARING ELEVATION

TYPE	SUBSTRUCTURE UNIT	GIRDER	θ
GE-x	-----	-	-
		-	-
	-----	-	-
		-	-

BEARING TYPE GE-x

GUIDED

SHEET 2 OF 2

TYPE	QTY.	MASONRY PLATE						ANCHOR BOLT		POT						NEOPRENE DISC			PISTON				GUIDE PLATE	
		A	B	C	D	E	F	QTY.	G	L	M	N	O	P	Q	R	S	T	U	V	W	X	Y	Z
GE-x	-	-	-	-	-	-	-	-	-	-	-	-	-	-	-	-	-	-	-	-	-	-	-	-

TYPE	GUIDE BARS							PTFE				STAINLESS STEEL			
	AA	BB	CC	DD	EE	FF	GG	HH	II	JJ	KK	LL	MM	NN	OO
GE-x	-	-	-	-	-	-	-	-	-	-	-	-	-	-	-

TYPE	SOLE PLATE				BEARING HEIGHT*
	H	I	J	K	PP
GE-x	-	-	-	-	-

* BEARING HEIGHT INCLUDES 1/8" FABRIC REINFORCED ELASTOMERIC PAD

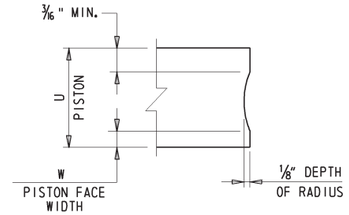

PISTON DETAIL

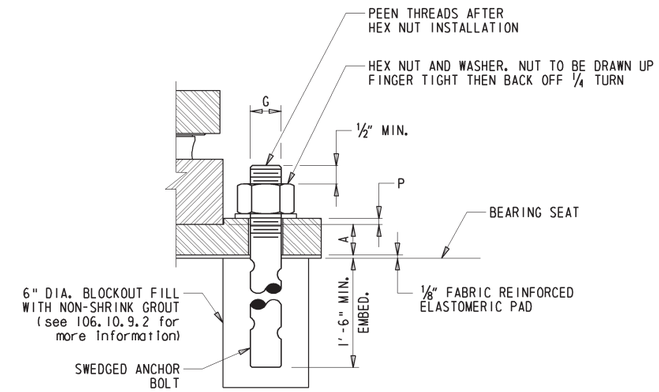

ANCHOR BOLT DETAIL

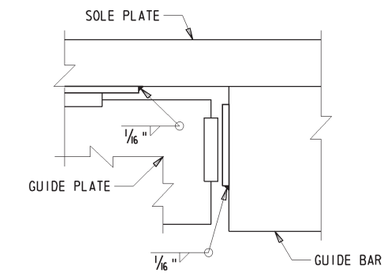

STAINLESS STEEL WELD DETAIL

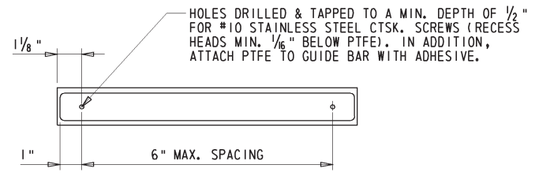

GUIDE PLATE PTFE DETAIL

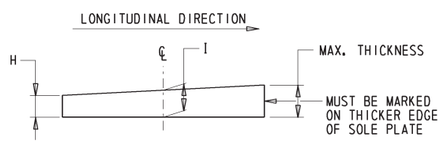

BEVELED SOLE PLATE DETAIL

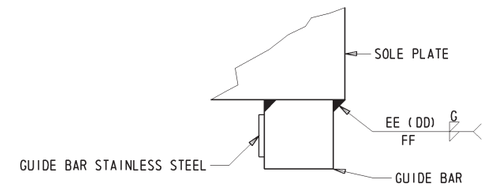

GUIDE BAR WELD DETAIL

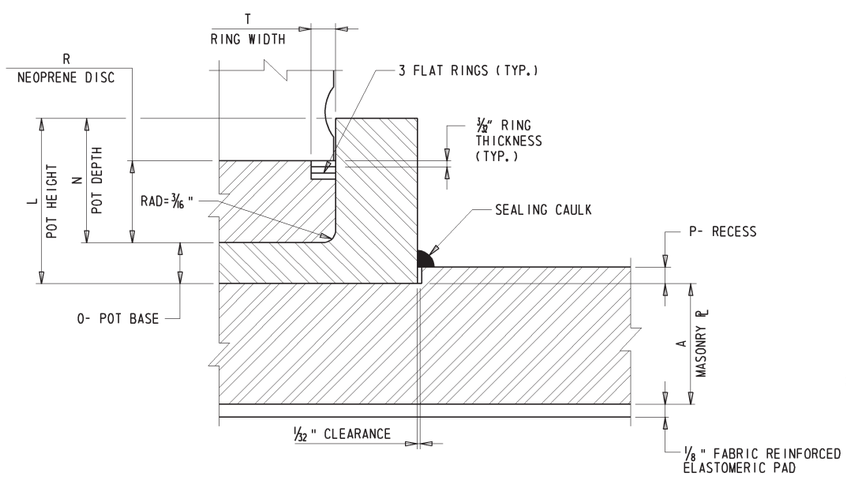

DETAIL A

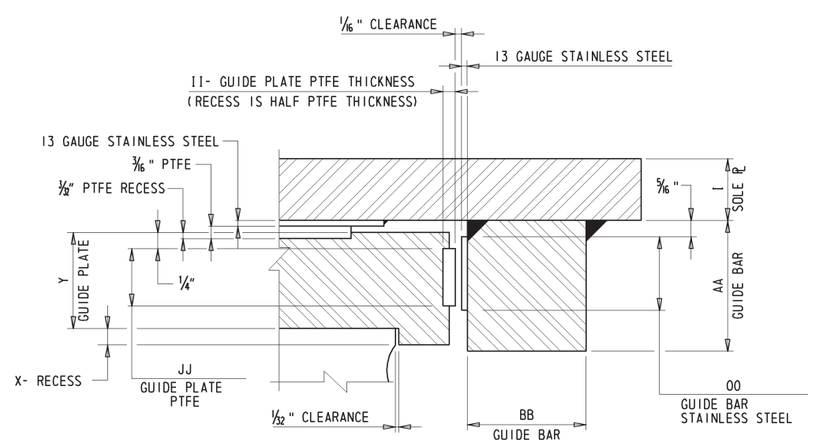

DETAIL B

BEARING TYPE GE-x

DELAWARE DEPARTMENT OF TRANSPORTATION BRIDGE DESIGN MANUAL	POT BEARING DETAILS	NOT TO SCALE	ISSUE DATE 10/01/2016	DETAIL No. 345.02 SHEET No. 4 of 6

NON-GUIDED

TYPE	QTY.	MASONRY PLATE						ANCHOR BOLT		SOLE PLATE				BEARING HEIGHT*	POT						NEOPRENE DISC			PISTON			PTFE	STAINLESS STEEL	
		A	B	C	D	E	F	QTY.	G	H	I	J	K	PP	L	M	N	O	P	Q	R	S	T	U	V	W	HH	LL	MM
E-x	-	-	-	-	-	-	-	-	-	-	-	-	-	-	-	-	-	-	-	-	-	-	-	-	-	-	-	-	-

* BEARING HEIGHT INCLUDES 1/8" FABRIC REINFORCED ELASTOMERIC PAD

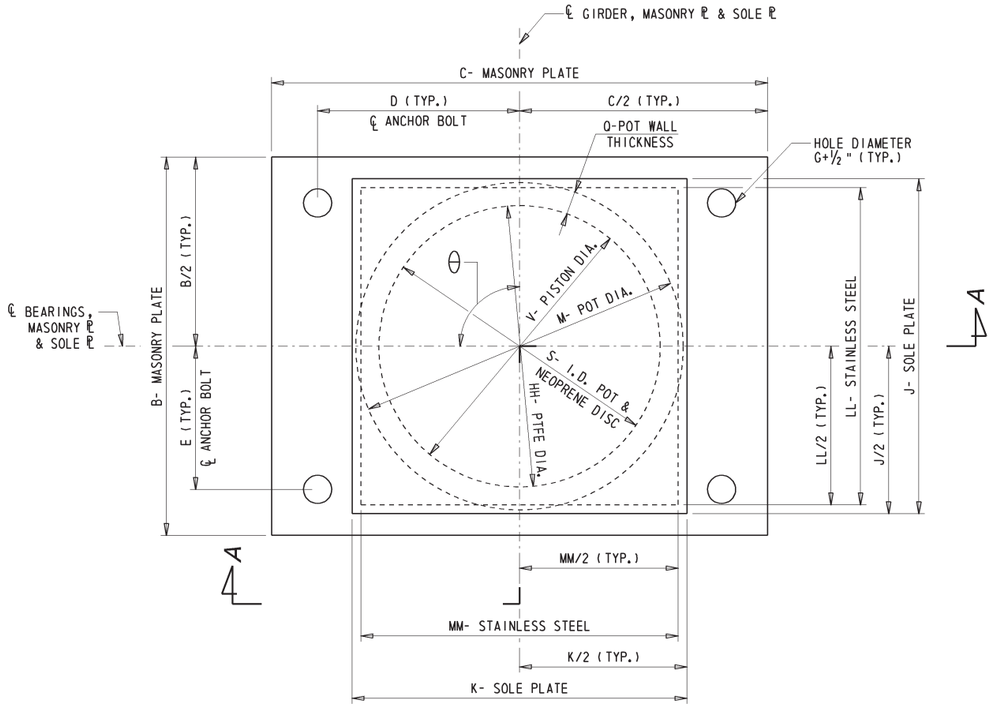

NON-GUIDED POT BEARING PLAN

ZERO SKEW SHOWN FOR CLARITY. ANY SKEW GREATER THAN ZERO MUST BE SHOWN ON THE PLAN VIEW. EXAMPLE SHOWN USING 4 ANCHOR BOLTS. REFER TO THE ANCHOR BOLT LOCATION PLAN FOR MORE INFORMATION.

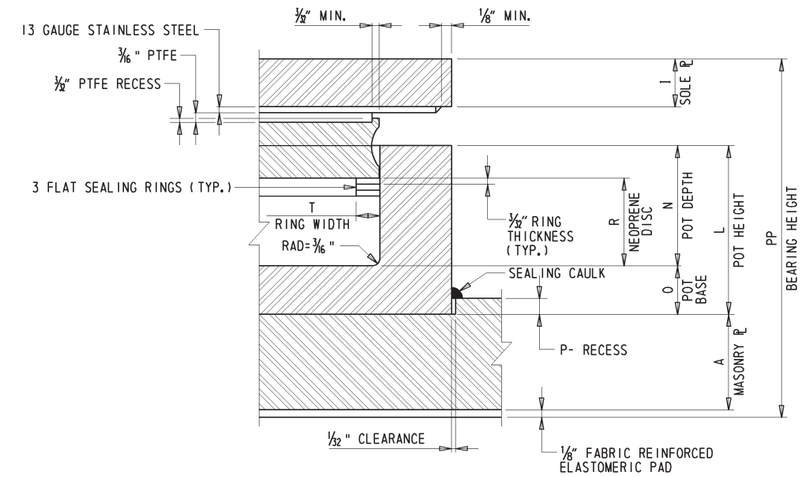

DETAIL A

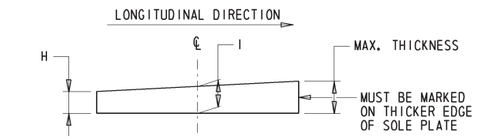

BEVELED SOLE PLATE DETAIL

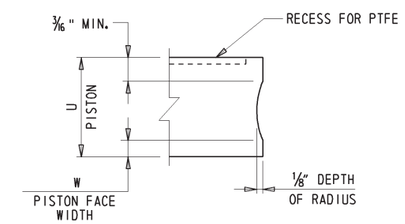

PISTON DETAIL

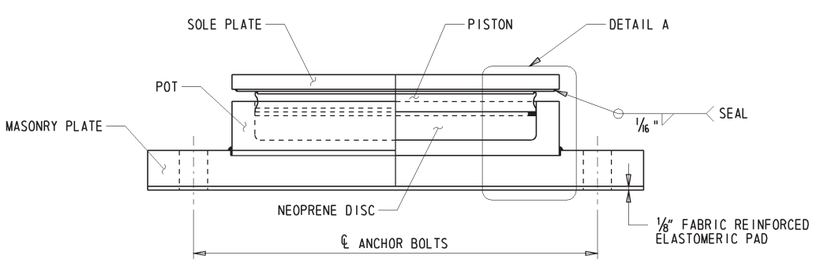

SECTION A-A

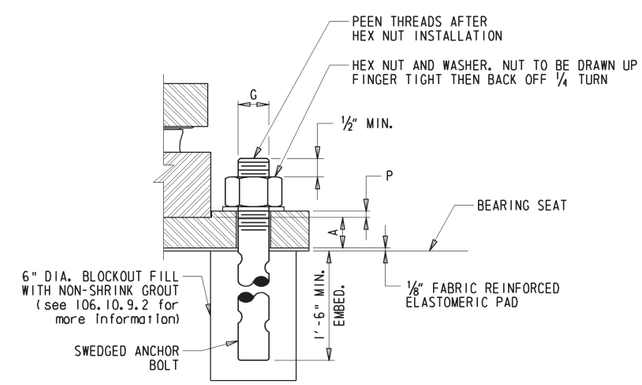

ANCHOR BOLT DETAIL

TYPE	SUBSTRUCTURE UNIT	GIRDER	θ
E-x	-----	-	-
		-	-
	-----	-	-
		-	-

BEARING TYPE E-x

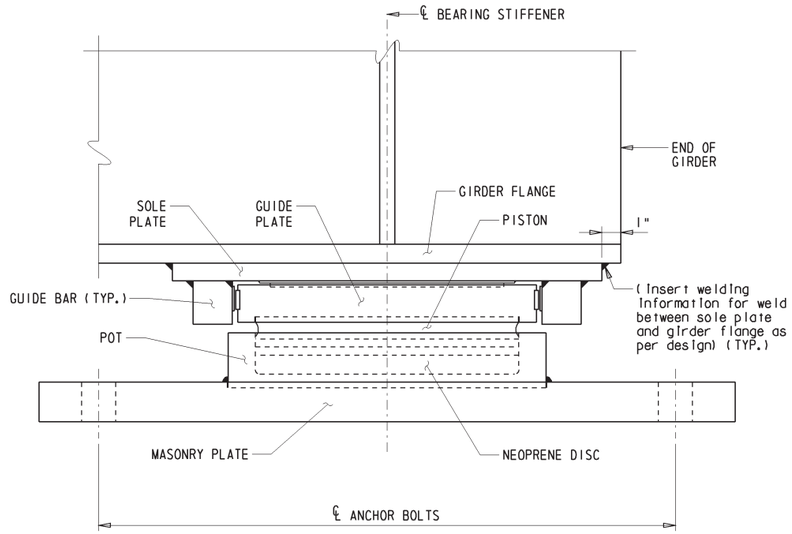

SIDE VIEW

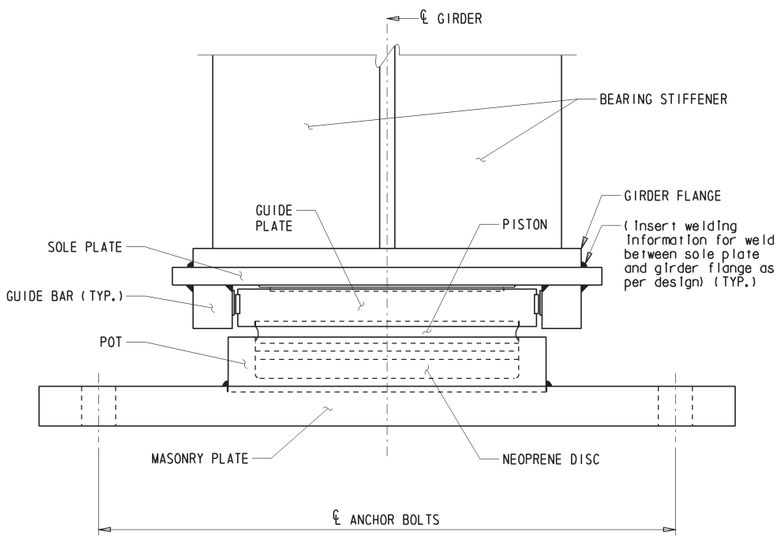

END VIEW

WELDED CONNECTION FOR STEEL GIRDER

EXAMPLE SHOWN USING GUIDED BEARING

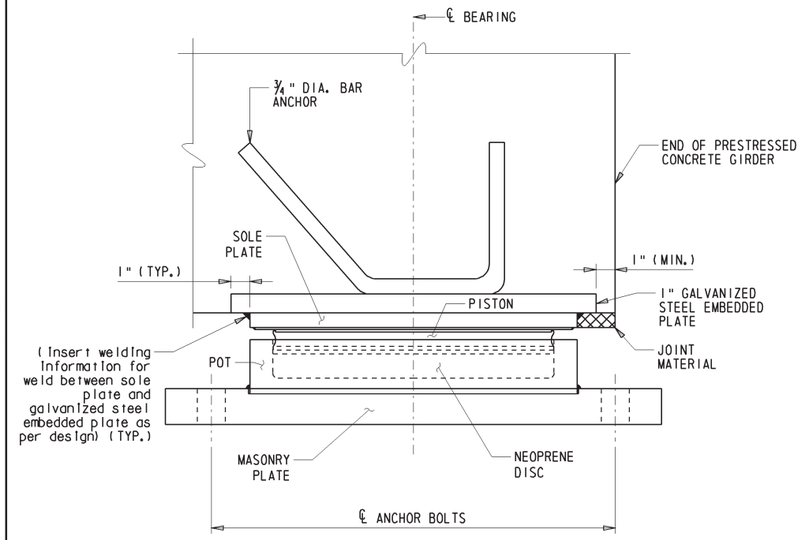

NOTE: NUMBER AND SPACING OF STUDS OR ANCHORS TO BE DETERMINED PER DESIGN. ENSURE THAT PLACEMENT OF STUDS OR ANCHORS DO NOT COME INTO CONFLICT WITH PRESTRESSING STRANDS.

SIDE VIEW

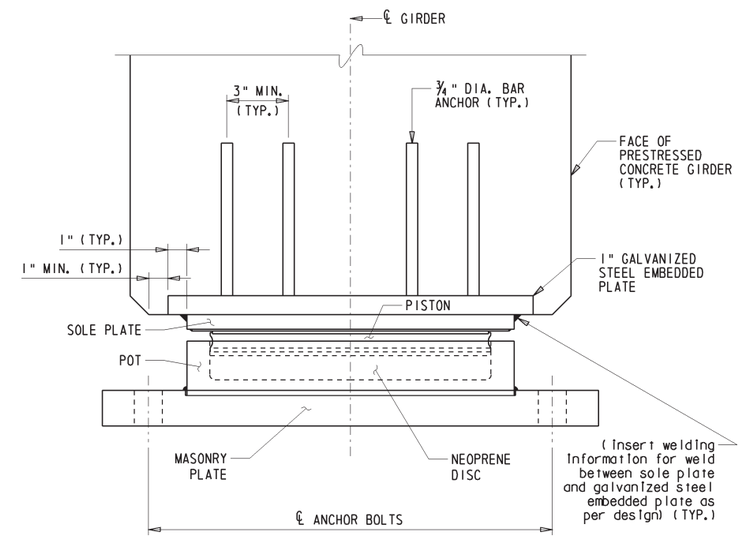

END VIEW

ANCHOR CONNECTION FOR PRESTRESSED CONCRETE GIRDER

EXAMPLE SHOWN USING NON-GUIDED BEARING

NOTE: CONNECTION DETAILS SHOWN ON THIS SHEET ARE FOR GUIDANCE ONLY. THE DESIGNER MUST DESIGN AND DETAIL THE CONNECTIONS TO BE PROJECT-SPECIFIC.

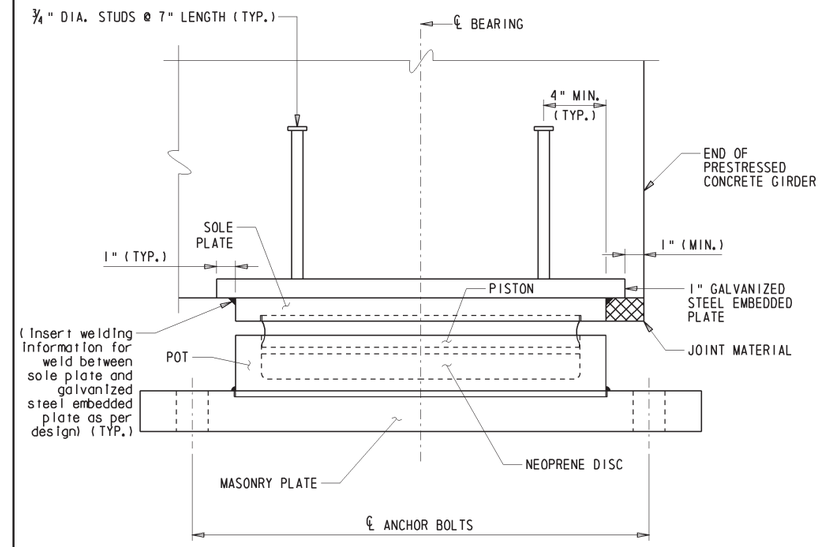

NOTE: NUMBER AND SPACING OF STUDS OR ANCHORS TO BE DETERMINED PER DESIGN. ENSURE THAT PLACEMENT OF STUDS OR ANCHORS DO NOT COME INTO CONFLICT WITH PRESTRESSING STRANDS.

SIDE VIEW

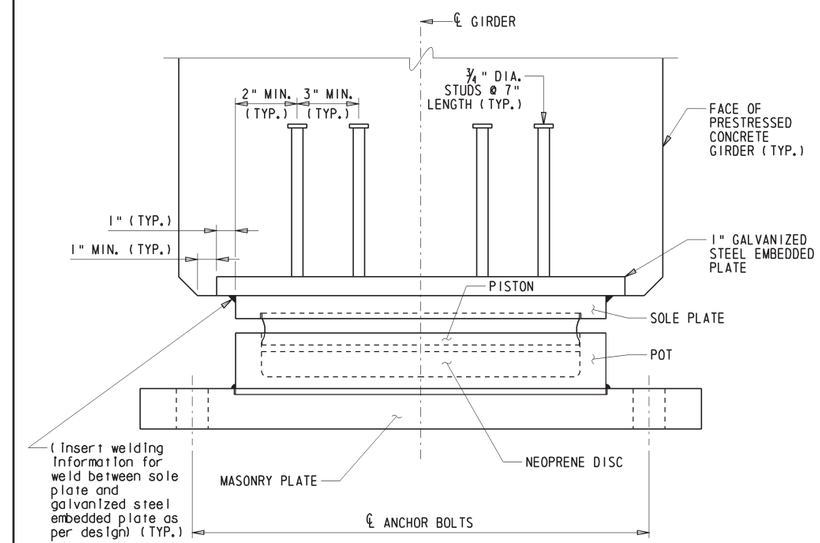

END VIEW

STUD CONNECTION FOR PRESTRESSED CONCRETE GIRDER

EXAMPLE SHOWN USING FIXED BEARING

OHW = ORDINARY HIGH WATER
HT = HIGH TIDE

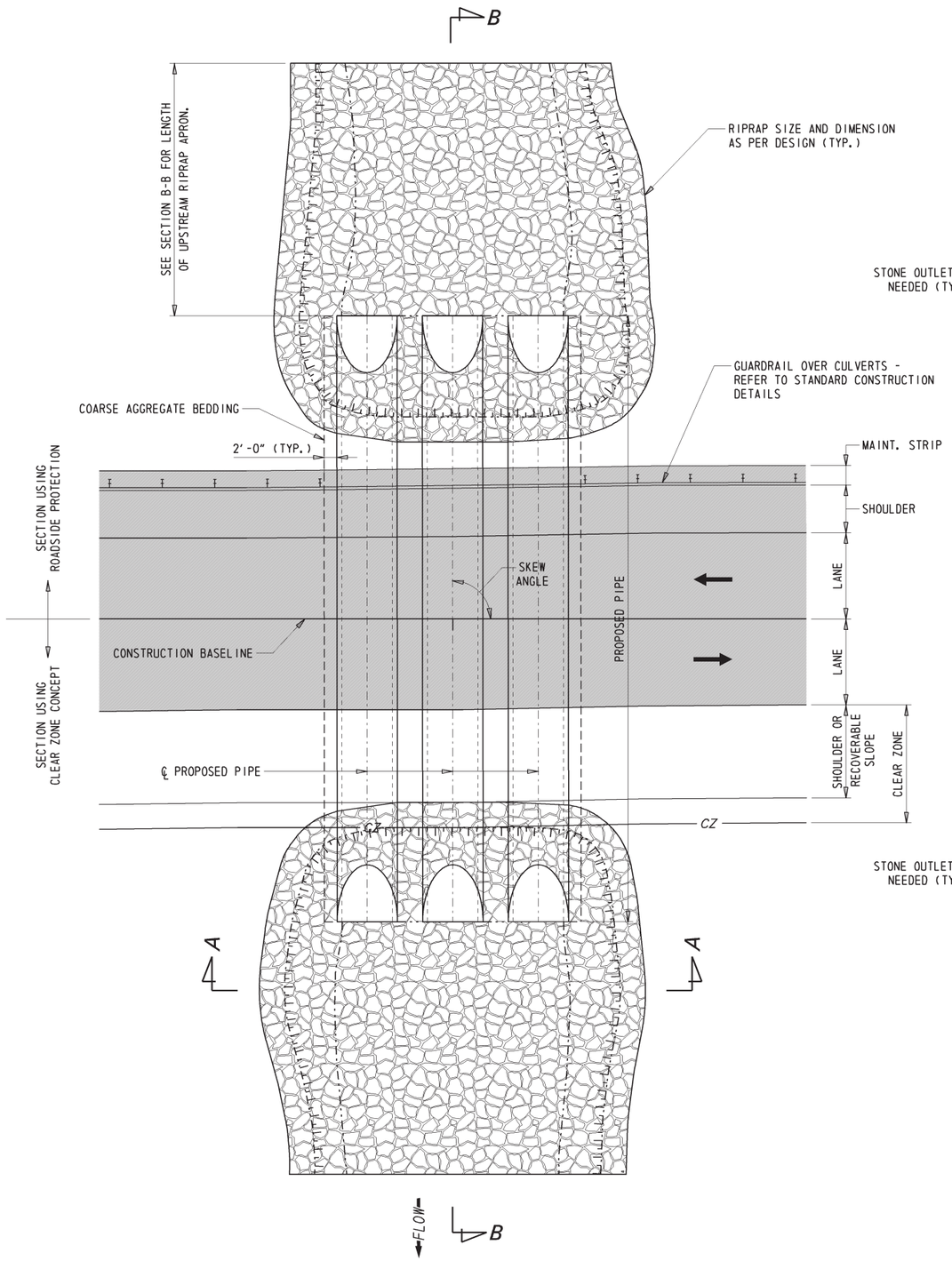

PLAN

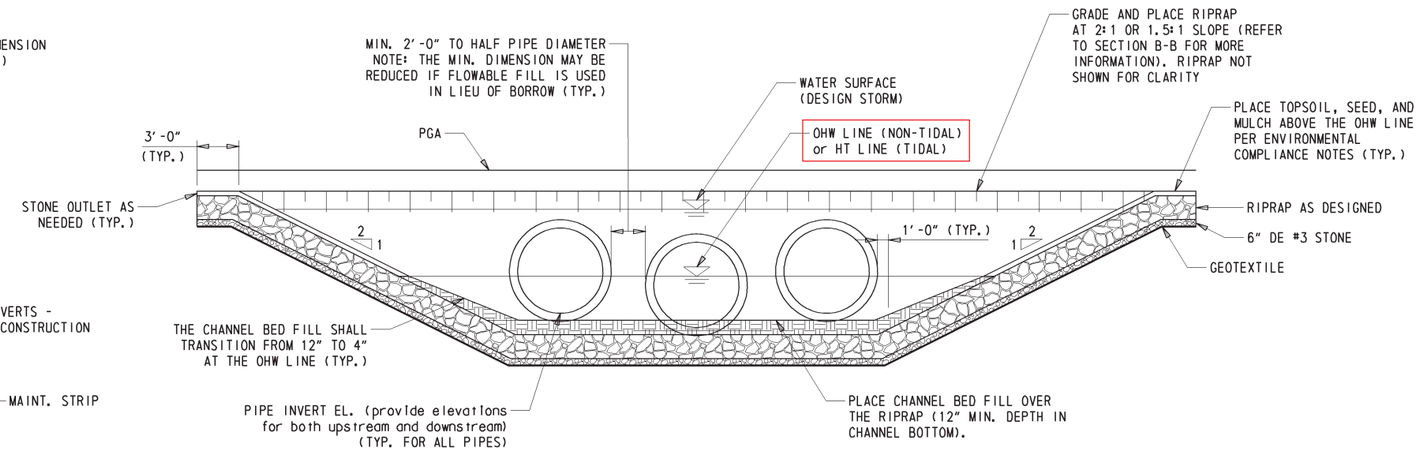

SECTION A-A (WITHOUT LOW-FLOW CHANNEL CONSTRUCTED IN RIPRAP)

NOTE: REFER TO PROJECT SPECIFIC ENVIRONMENTAL COMPLIANCE SHEET(S) FOR FURTHER INFORMATION ON RIPRAP AND TOPSOIL TREATMENT. GUARDRAIL OVER CULVERTS NOT SHOWN FOR CLARITY. FOR MORE INFORMATION ON PIPE INVERTS, SEE DESIGNER NOTE 9.

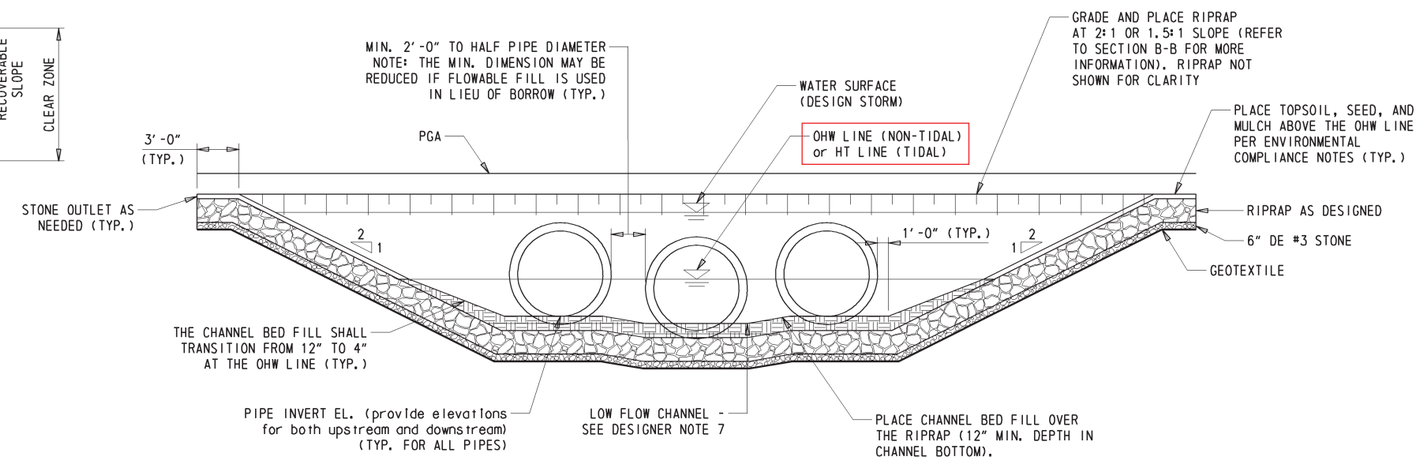

SECTION A-A (WITH LOW-FLOW CHANNEL CONSTRUCTED IN RIPRAP)

NOTE: REFER TO PROJECT SPECIFIC ENVIRONMENTAL COMPLIANCE SHEET(S) FOR FURTHER INFORMATION ON RIPRAP AND TOPSOIL TREATMENT. GUARDRAIL OVER CULVERTS NOT SHOWN FOR CLARITY. FOR MORE INFORMATION ON PIPE INVERTS, SEE DESIGNER NOTE 9.

DELAWARE DEPARTMENT OF TRANSPORTATION **BRIDGE DESIGN MANUAL**	PIPE CULVERT DETAILS	NOT TO SCALE	ISSUE DATE 10/01/2015 10/01/2016	DETAIL No. 350.01 SHEET No. 1 of 2

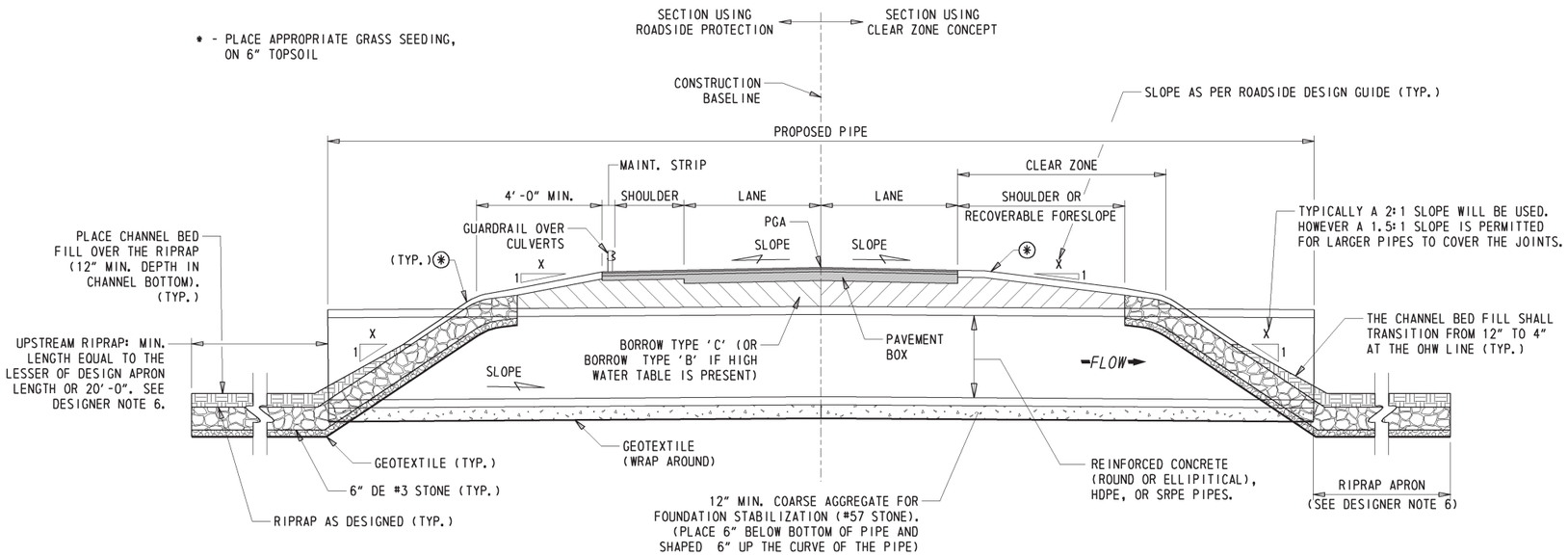

SECTION B-B

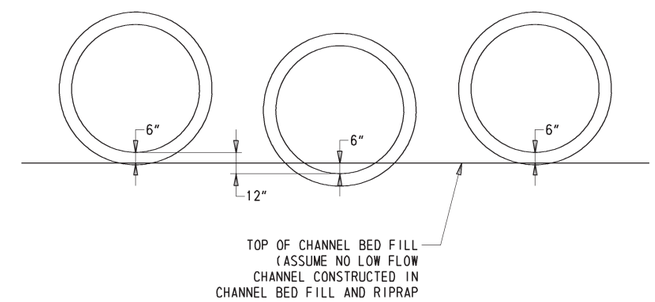

PIPE INVERT DIAGRAM

NOTE: IN CASES WHERE TWO PIPE RUNS ARE USED, ONE PIPE MAY MEET THE REQUIREMENTS OF THE CENTER PIPE AND THE OTHER MEET THE REQUIREMENTS OF THE SIDE PIPES AS SHOWED ABOVE. NOTE THAT NOT IN ALL INSTANCES WILL MULTIPLE RUNS OF PIPES DIFFER IN INVERT ELEVATIONS. CONSULT WITH THE ENVIRONMENTAL STUDIES SECTION FOR RECOMMENDED PIPE INVERTS.

TYPE	CONDITION	MINIMUM COVER (H_{min})
FLEXIBLE PIPE		
THERMOPLASTIC (HDPE) PIPE **	UNDER UNPAVED AREAS	S/8 ≥ 12-INCH *
	UNDER PAVED ROADS	S/2 ≥ 24-INCH *
STEEL-REINFORCED THERMOPLASTIC (SRPE) PIPE		S/5 ≥ 12-INCH *
RIGID PIPE		
REINFORCED CONCRETE PIPE ***	UNDER UNPAVED AREAS OR TOP OF FLEXIBLE PAVEMENT	S/8 ≥ 12-INCH (MEASURED FROM TOP OF FLEXIBLE PAVEMENT OR TOP OF GROUND) *
	UNDER RIGID PAVEMENT	9-INCH (MEASURED FROM BOTTOM OF RIGID PAVEMENT) *

NOTE:

* SEE MINIMUM COVER ORIENTATION FOR MINIMUM COVER FOR RIGID AND FLEXIBLE PIPE.

** MAXIMUM INTERIOR PIPE DIMENSION ALLOWED FOR THERMOPLASTIC (HDPE) PIPES IS 60 INCHES.

*** CLASS IV OR V REINFORCED CONCRETE PIPE MAY BE USED IN ACCORDANCE WITH AASHTO DESIGN STANDARDS WHERE THE COVER IS SHALLOWER THAN THE MINIMUM COVER FOR CLASS III. CLASS III IS THE MINIMUM ALLOWED BY DELDOT.

WHERE: S = LARGEST INTERIOR PIPE DIMENSION (IN.)

MINIMUM COVER

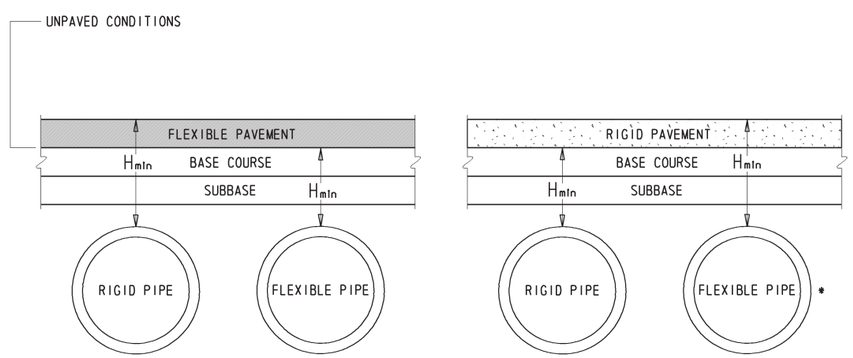

H_{min} = MINIMUM ALLOWABLE COVER DIMENSION

NOTE: THE MINIMUM COVER DIMENSION IS NOT TO BE CONFUSED WITH THE FILL HEIGHT USED FOR CALCULATION PURPOSES, WHICH SHALL BE FROM THE TOP OF THE PIPE TO THE TOP OF THE SURFACE, REGARDLESS OF THE PIPE TYPE OR PAVEMENT TYPE.

*MINIMUM 3" BELOW RIGID PAVEMENT

MINIMUM COVER ORIENTATION

DESIGNER NOTES

1. REINFORCED CONCRETE PIPES, THERMOPLASTIC (HDPE) PIPES, AND STEEL-REINFORCED THERMOPLASTIC (SRPE) PIPES SHALL BE MANUFACTURED AND INSTALLED IN ACCORDANCE WITH SECTION 601 OF THE STANDARD SPECIFICATIONS.
2. FOR MORE INFORMATION ON AVAILABLE PIPE SIZES, PLEASE REFER TO THE FOLLOWING:
   a. AASHTO M170, AASHTO M207 OR ACPA CONCRETE DESIGN MANUAL FOR REINFORCED CONCRETE PIPES (CIRCULAR AND ELLIPTICAL).
   b. AASHTO M294 FOR THERMOPLASTIC (HDPE) PIPES. HDPE PIPES SHALL BE LIMITED TO A MAXIMUM DIAMETER OF 60-INCHES.
   c. AASHTO M294 TYPE D FOR STEEL-REINFORCED THERMOPLASTIC (SRPE) PIPES.
3. IF HDPE PIPES ARE USED ON A PROJECT, THE DESIGNER SHALL SPECIFY THE TYPE OF PIPE ON THE PLANS. SECTION 601 OF THE STANDARD SPECIFICATIONS LISTS SEVERAL TYPES OF HDPE PIPES THAT ARE PERMITTED IN DELAWARE.
4. IT IS RECOMMENDED THAT THE DESIGNER VERIFY THE AVAILABILITY FOR THE SELECTED PIPE TYPE AND SIZE BY CONTACTING THE LOCAL FABRICATORS.
5. THE HYDRAULIC CAPACITY OF PIPE CULVERTS SHALL BE DETERMINED IN ACCORDANCE WITH SECTION 104 - HYDROLOGY AND HYDRAULIC INVESTIGATIONS.
6. THE SIZE AND DIMENSION OF RIPRAP PROTECTION SHALL BE AS REQUIRED BY HYDRAULIC CALCULATIONS. FOR UPSTREAM OR DOWNSTREAM LIMITS, THE MINIMUM LENGTH MAY BE EXTENDED TO FIT FIELD CONDITIONS (BENDS, SCOUR HOLES, ETC.). THE MINIMUM SIZE OF RIPRAP IS R-4 IF BURIED AND R-5 IF EXPOSED. RIPRAP SHALL BE CONTOURED TO MATCH THE SHAPE OF THE EXISTING STREAM BANKS AT THE PROJECT LIMITS.
7. WHEN REQUIRED FOR ENVIRONMENTAL COMPLIANCE, A LOW FLOW CHANNEL SHALL BE CONSTRUCTED IN THE RIPRAP AND CHANNEL BED FILL. DIMENSIONS OF THE LOW FLOW CHANNEL ARE LOCATION SPECIFIC AND WILL BE PROVIDED BY THE ENVIRONMENTAL STUDIES SECTION.
8. THE PIPES AS SHOWN ON SHEET 1 ARE THREE CIRCULAR REINFORCED CONCRETE PIPES. THE USE OF ELLIPTICAL REINFORCED CONCRETE PIPES, HDPE PIPES, AND SRPE PIPES MAY BE CONSIDERED. THE MINIMUM NUMBER OF RUNS IS 1 AND THE MAXIMUM NUMBER OF RUNS IS 3.
9. THE INVERT OF THE CENTER PIPE SHALL BE RECESSED 6-INCHES BELOW THE STREAMBED ELEVATION (I.E. CHANNEL BED FILL ELEVATION). THE SIDE PIPES SHALL BE RAISED ABOVE THE INVERT OF THE CENTER PIPE BY A MINIMUM OF 12-INCHES. IF UNABLE TO COMPLY, COORDINATE WITH THE ENVIRONMENTAL STUDIES SECTION FOR EXCEPTION. REFER TO PIPE INVERT DIAGRAM FOR MORE INFORMATION.
10. LIMITS FOR POTENTIAL EXCAVATION OF UNSUITABLE MATERIAL IN SECTION B-B VIEW NOT SHOWN FOR CLARITY. FOR PROJECTS THAT REQUIRE EXCAVATION OF UNSUITABLE MATERIAL, SHOW LIMITS OF THE EXCAVATION AND SPECIFY TYPE(S) OF BACKFILL TO BE USED ON SECTION B-B VIEW.

OHW = ORDINARY HIGH WATER
HT = HIGH TIDE

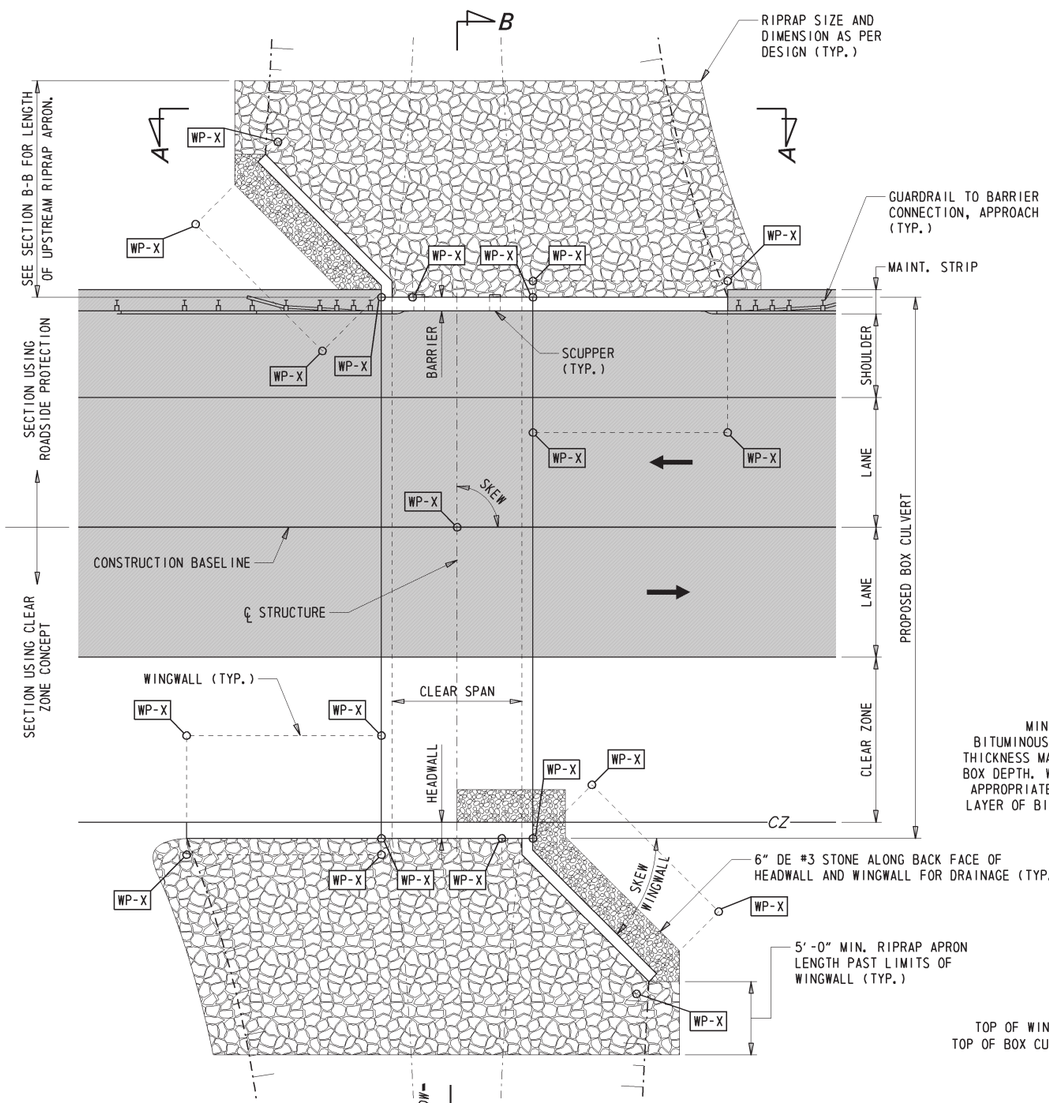

PLAN

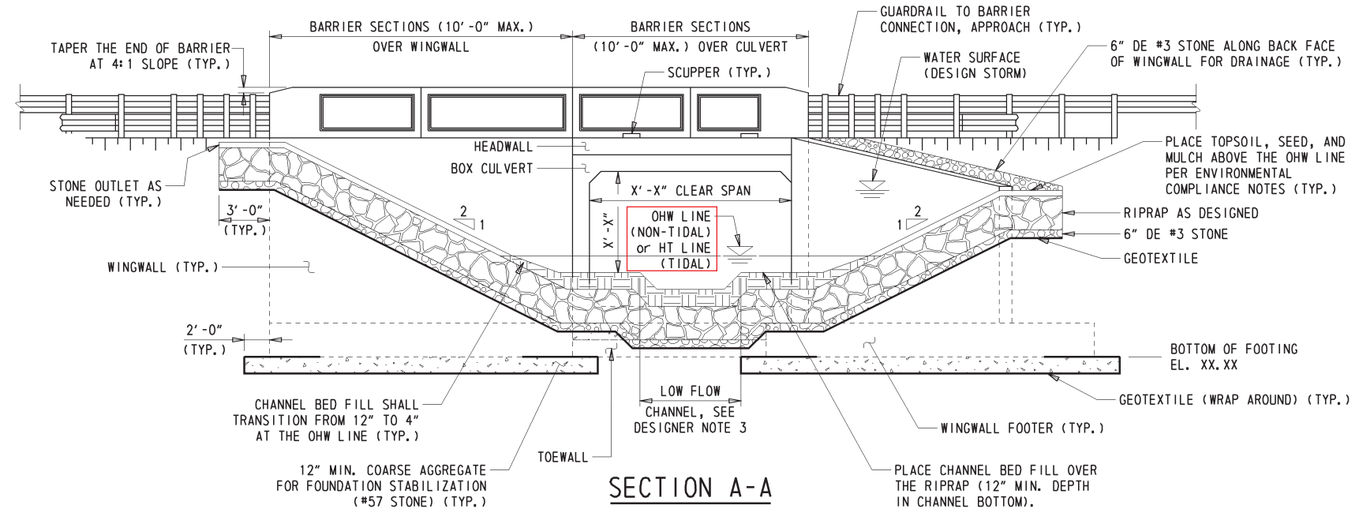

SECTION A-A

NOTE: REFER TO PROJECT SPECIFIC ENVIRONMENTAL COMPLIANCE SHEET(S) FOR FURTHER INFORMATION ON RIPRAP AND TOPSOIL TREATMENT. EXAMPLE IN SECTIONS A-A AND B-B SHOWN USING LOW FLOW CHANNEL.

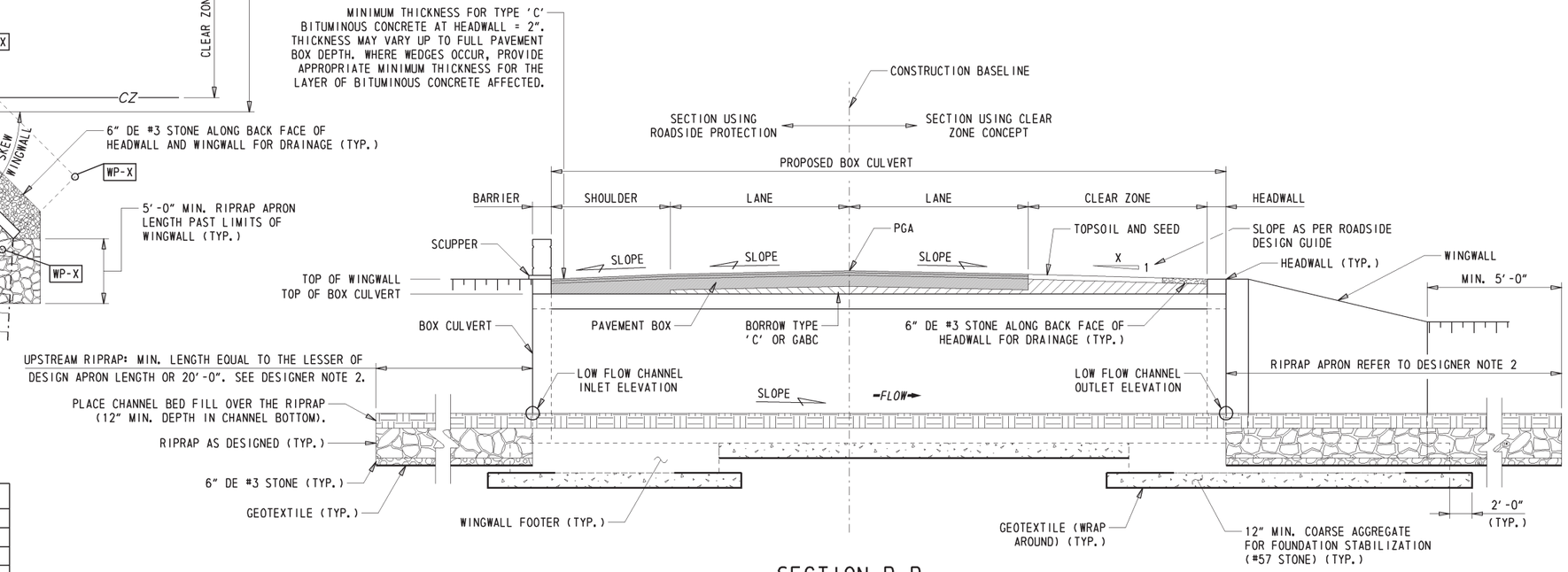

SECTION B-B

WORKING POINTS				
POINT	STATION	OFFSET	NORTHING	EASTING
WP-X	-------	-------	-------	-------
WP-X	-------	-------	-------	-------
WP-X	-------	-------	-------	-------
WP-X	-------	-------	-------	-------

NOTE:
-TOEWALL NOT SHOWN FOR CLARITY.
-SPECIFY THE NEED FOR A WATERPROOFING MEMBRANE IF BITUMINOUS CONCRETE IS PLACED DIRECTLY ATOP THE BOX CULVERT. IF GABC OR FILL IS PLACED DIRECTLY ATOP THE BOX CULVERT, APPLICATION OF A WATERPROOFING MEMBRANE IS NOT REQUIRED.
-FOR STREAMS ON SHALLOW GRADE, PLACE RIPRAP FLAT AND BUILD APPROPRIATE CHANNEL SLOPE INTO THE CHANNEL BED FILL.

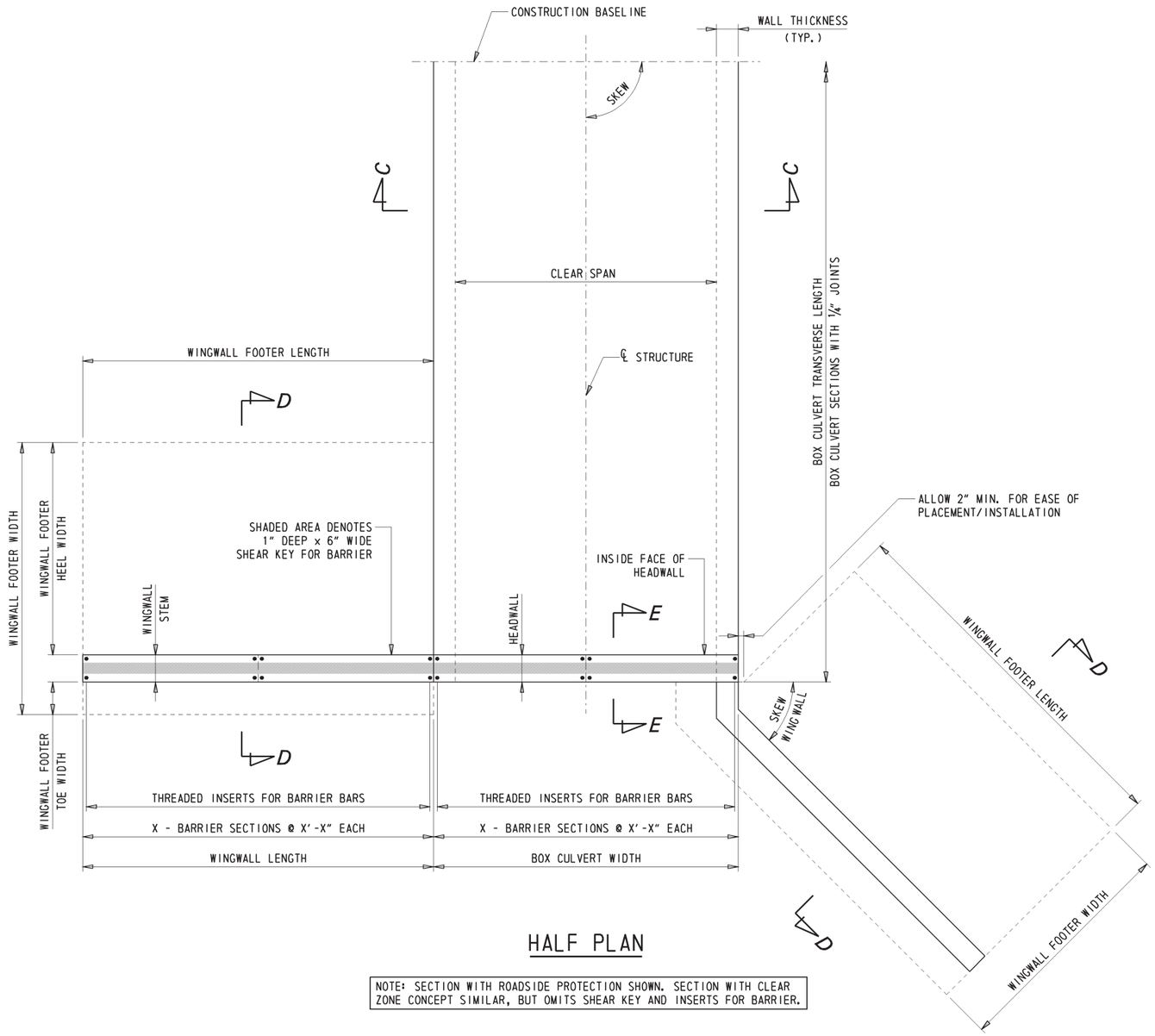

HALF PLAN

NOTE: SECTION WITH ROADSIDE PROTECTION SHOWN. SECTION WITH CLEAR ZONE CONCEPT SIMILAR, BUT OMITS SHEAR KEY AND INSERTS FOR BARRIER.

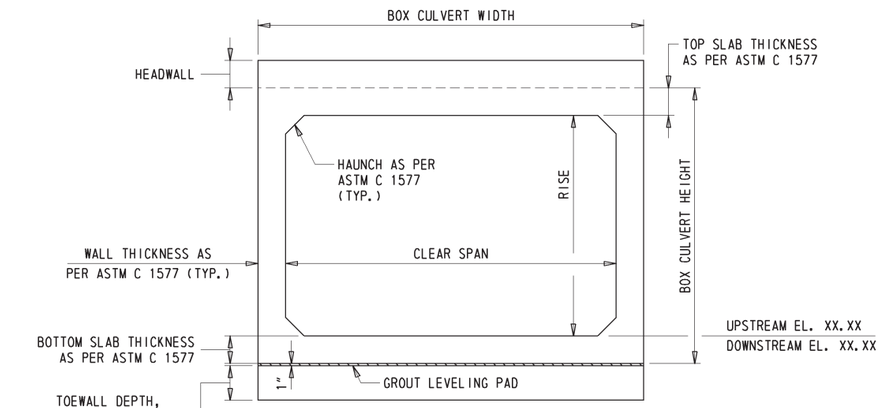

BOX CULVERT
(SECTION C-C)

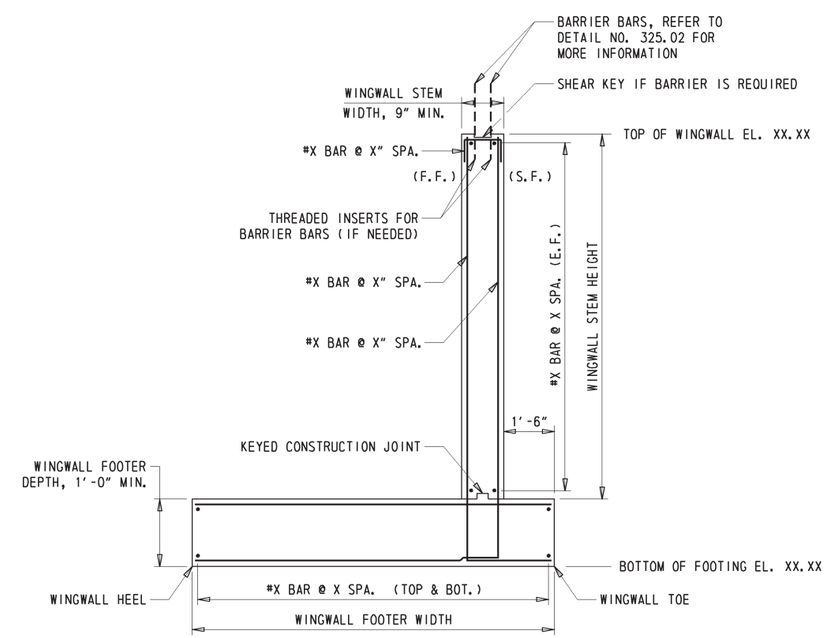

WINGWALL DETAIL
(SECTION D-D)

NOTE: FOR WINGWALL USING CLEAR ZONE CONCEPT OR FLARED WINGWALLS, OMIT SHEAR KEY FOR BARRIER.

LEGEND
E.F. - DENOTES EACH FACE
F.F. - DENOTES FILL FACE
S.F. - DENOTES STREAM FACE

DELAWARE DEPARTMENT OF TRANSPORTATION **BRIDGE DESIGN MANUAL**	PRECAST CONCRETE BOX CULVERT DETAILS	NOT TO SCALE	ISSUE DATE 10/01/2015	DETAIL No. 355.01 SHEET No. 2 of 3

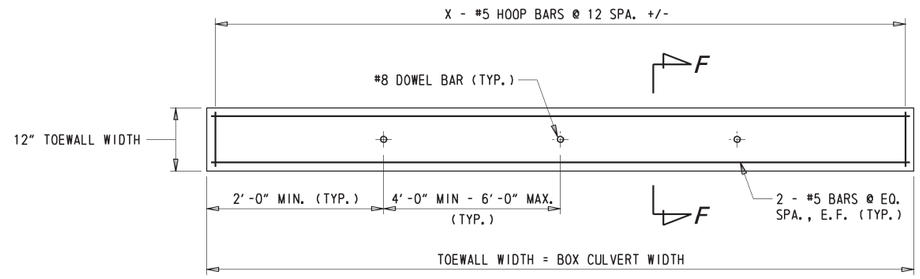

TOEWALL PLAN
(SECTION E-E)

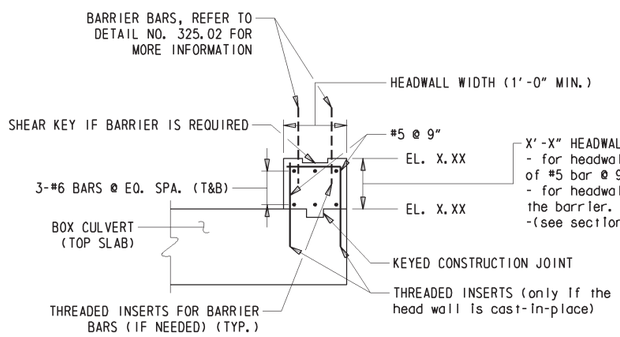

X'-X" HEADWALL
- for headwall without barriers, 6" min. and 2'-0" max. headwall height for use of #5 bar @ 9". If greater than 2'-0" in height, reinforcement must be designed.
- for headwall with barriers, if less than 6" in height, cast the headwall with the barrier.
-(see section 107.7.5.1 for more information)

HEADWALL DETAIL
(SECTION E-E)

NOTE: FOR WINGWALL USING CLEAR ZONE CONCEPT OR FLARED WINGWALLS, OMIT SHEAR KEY FOR BARRIER.

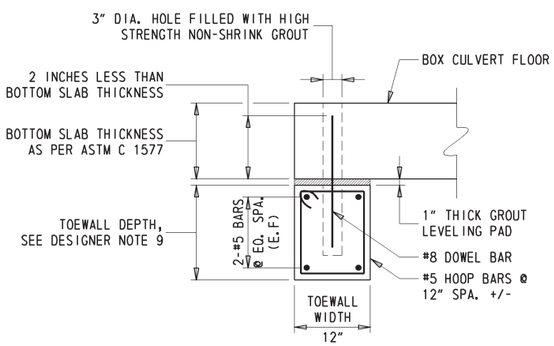

TOEWALL DETAIL
(SECTION F-F)

DESIGNER NOTES

1. THE HYDRAULIC CAPACITY OF BOX CULVERTS SHALL BE DETERMINED IN ACCORDANCE WITH SECTION 104 - HYDROLOGY AND HYDRAULIC INVESTIGATIONS.
2. THE SIZE AND DIMENSION OF RIPRAP PROTECTION SHALL BE AS REQUIRED BY HYDRAULIC CALCULATIONS. FOR UPSTREAM OR DOWNSTREAM LIMITS, THE MINIMUM LENGTH MAY BE EXTENDED TO FIT FIELD CONDITIONS (BENDS, SCOUR HOLES, ETC.). THE MINIMUM SIZE OF RIPRAP IS R-4 IF BURIED AND R-5 IF EXPOSED. RIPRAP SHALL BE CONTOURED TO MATCH THE SHAPE OF THE EXISTING STREAM BANKS AT THE PROJECT LIMITS.
3. AS DIRECTED BY ENVIRONMENTAL STUDIES SECTION, A LOW FLOW CHANNEL SHALL BE CONSTRUCTED IN THE RIPRAP AND CHANNEL BED FILL. DIMENSIONS OF THE LOW FLOW CHANNEL ARE LOCATION SPECIFIC AND WILL BE PROVIDED BY THE ENVIRONMENTAL STUDIES SECTION. THIS APPLIES ONLY TO BOX CULVERTS WITH SPANS OF 10'-0" OR GREATER DUE TO THE INABILITY OF THE LOW FLOW CHANNEL CONSTRUCTED SOLELY FROM CHANNEL BED FILL TO HOLD ITS SHAPE INSIDE THE CULVERT BARREL WHEN THE SPAN IS LESS THAN 10'-0".
4. EXAMPLES SHOWN ON SHEET 1 UTILIZE SCUPPERS. THE NEED FOR SCUPPERS SHALL BE EVALUATED ON A CASE BY CASE BASIS.
5. 'GUARDRAIL OVER CULVERTS' AS SHOWN IN DELDOT STANDARD CONSTRUCTION DETAILS MAY BE CONSIDERED FOR BOX CULVERTS (SPANS OF 18'-6" OR UNDER) IN LIEU OF CONCRETE BARRIERS IF THE WINGWALLS ARE FLARED AND THE WIDTH OF THE BOX CULVERT WILL ACCOMMODATE FOR THE MAIN SPACING OF 'GUARDRAIL OVER CULVERTS'.
6. MORE INFORMATION ON BARRIER DETAILS CAN BE FOUND IN DETAIL NO. 325.02 - BRIDGE RAILING DETAILS.
7. NO REINFORCEMENT IS SHOWN IN 'BOX CULVERT (SECTION C-C)' DUE TO ASSUMPTION THAT ASTM C1577 BOX CULVERT SIZES WILL TYPICALLY BE USED. BOX CULVERT SIZES AS SHOWN IN ASTM C1577 SHOULD BE USED WHEN POSSIBLE, BUT IN CASES WHERE BOX CULVERT SIZES LISTED IN ASTM C1577 CANNOT BE USED (MOSTLY DUE TO THE NEED TO USE SIZES GREATER THAN 12 FT X 12 FT), THE DESIGNER MUST DESIGN AND SHOW REINFORCEMENT DETAILS OF THE BOX CULVERT ON THE PLANS, SIMILAR TO SECTION C-C IN DETAIL NO. 360.01 - PRECAST CONCRETE RIGID FRAME DETAILS.
8. WINGWALL LAYOUT:
   THE DESIGNER SHALL CONSIDER THE HEIGHT OF THE ROADWAY EMBANKMENT, THE ELEVATION OF THE SURROUNDING GROUND, AND THE DEPTH OF THE STREAM CHANNEL TO DETERMINE THE WINGWALL LAYOUT.

   (a.) AT SITES WHERE THERE IS LITTLE OR NO ROADWAY EMBANKMENT AND A DEEP CHANNEL, WINGWALLS PARALLEL TO THE ROADWAY ARE THE PREFERRED OPTION. PARALLEL WINGWALLS FOR SECTION WITH ROADSIDE PROTECTION CAN UTILIZE BARRIER ALONG THE ENTIRE LENGTH (AS DEPICTED IN THIS DETAIL) OR BE OFFSET BEHIND GUARDRAIL (NOT DEPICTED IN THIS DETAIL) WHERE THE BARRIER IS PLACED ONLY ON THE BOX CULVERT OR GUARDRAIL OVER CULVERTS IS USED.

   (b.) AT SITES WHERE THERE IS A RELATIVELY TALL ROADWAY EMBANKMENT AND VERY SHALLOW CHANNEL, WINGWALLS PERPENDICULAR TO THE ROADWAY MAY BE USED.

   (c.) FOR CASES IN-BETWEEN (THAT HAVE SOME ROADWAY EMBANKMENT AND SOME CHANNEL DEPTH), ANGLED WINGWALLS ARE PREFERRED. 45° WINGWALLS ARE DEPICTED IN THIS DETAIL, BUT 15°, 30°, AND 60° WINGWALLS MAY BE USED BASED ON SITE CONDITIONS. IN ADDITION, WHERE THE STREAM APPROACHES THE BRIDGE INLET AT AN ACUTE ANGLE OF ATTACK, CONSIDER USING A DIFFERENT WINGWALL ANGLE ON THE OUTSIDE OF THE BEND SO THAT THE WINGWALL CAN ACT AS A GUIDE WALL TO HELP DIRECT FLOW IN TO THE INLET.

   (d.) AT BOX CULVERTS WITH A HIGH SKEW ANGLE (GREATER THAN 20°), WINGWALLS WITH BARRIER PARALLEL TO THE ROADWAY CAN BE ADVANTAGEOUS FOR GUARDRAIL TO BARRIER CONNECTION, REGARDLESS OF SITE CONDITIONS.
9. TOEWALLS MUST BE EMBEDDED A MINIMUM OF 3'-6" BELOW THE STREAMBED IN ACCORDANCE WITH SECTION 107.7.5.3. IN AN EVENT WHERE THE WINGWALL FOOTINGS ARE DEEPER THAN THE MINIMUM EMBEDMENT REQUIREMENTS, THE BOTTOM OF THE TOEWALL SHOULD MEET THE BOTTOM OF THE WINGWALL FOOTINGS.
10. THE FORMER PRECAST NOTES (WEEPHOLES, CONNECTION PLATES, ETC.) INCLUDED IN PAST PRECAST CONCRETE BOX CULVERT PROJECTS ARE NO LONGER REQUIRED TO BE SHOWN ON THE PLANS. THESE NOTES HAVE BEEN ADDED TO SECTION 612 OF THE DELDOT STANDARD SPECIFICATIONS.
11. PLACEMENT OF WEEPHOLES: WHEN POSSIBLE, PLACE WEEPHOLE OUTLETS ABOVE THE OHW LINE. THE DESIGNER SHOULD CONSIDER USING WEEPHOLES WHERE SPRINGS ARE PREVALENT (PIEDMONT REGION) OR WHEN THE BRIDGE IS IN PRONOUNCED SAG/VALLEY. WEEPHOLES ARE GENERALLY NOT NEEDED WHEN THE STRUCTURE IS IN AN EMBANKMENT.
12. LIMITS FOR POTENTIAL EXCAVATION OF UNSUITABLE MATERIAL IN SECTION A-A AND B-B VIEWS NOT SHOWN FOR CLARITY. FOR PROJECTS THAT REQUIRE EXCAVATION OF UNSUITABLE MATERIAL, SHOW LIMITS OF THE EXCAVATION AND SPECIFY TYPE(S) OF BACKFILL TO BE USED ON SECTION A-A AND B-B VIEWS.

OHW = ORDINARY HIGH WATER
HT = HIGH TIDE

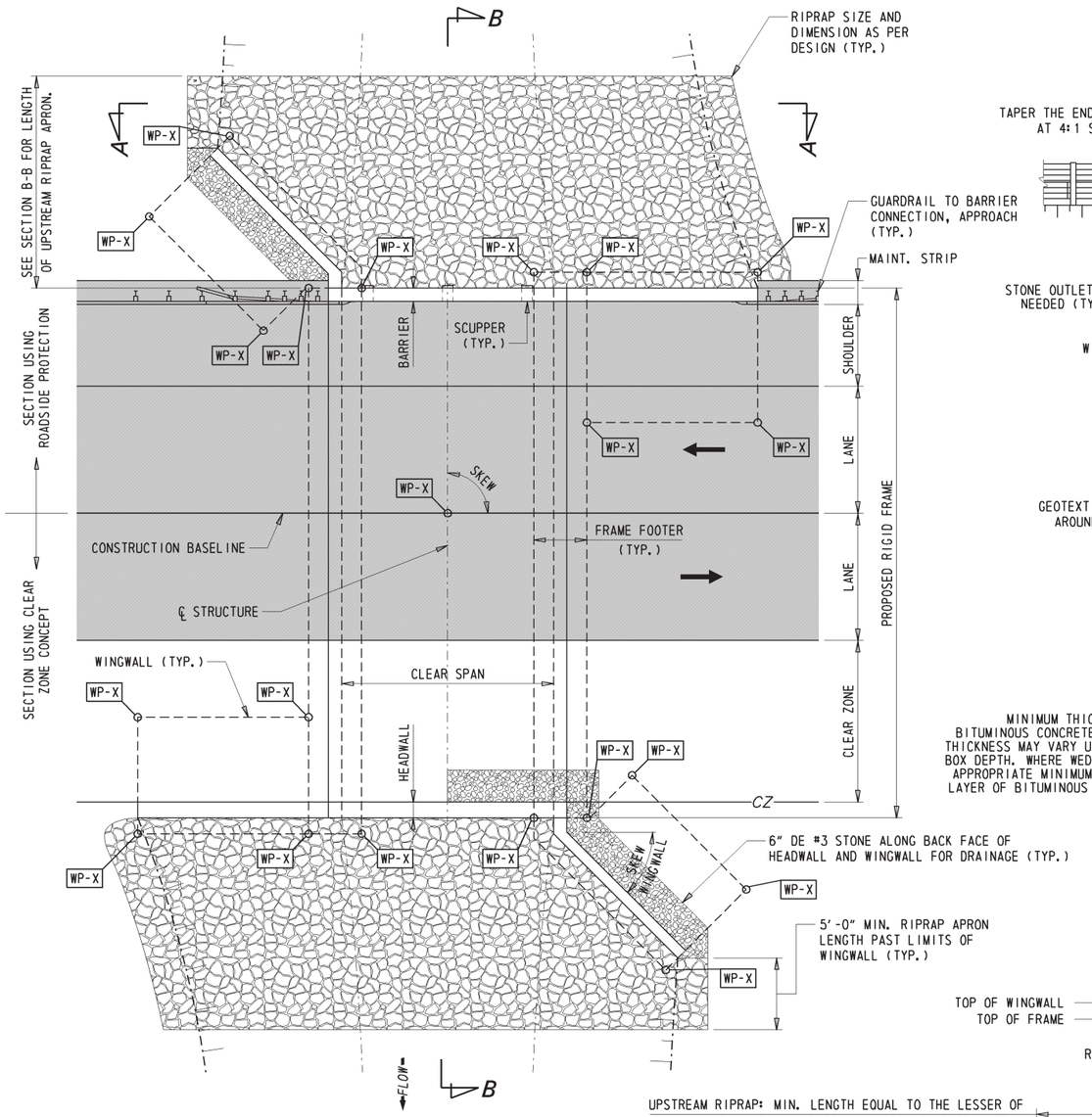

PLAN

NOTE: RIPRAP UNDER RIGID FRAME NOT SHOWN FOR CLARITY.

WORKING POINTS				
POINT	STATION	OFFSET	NORTHING	EASTING
WP-X	-------	-------	-------	-------
WP-X	-------	-------	-------	-------
WP-X	-------	-------	-------	-------
WP-X	-------	-------	-------	-------

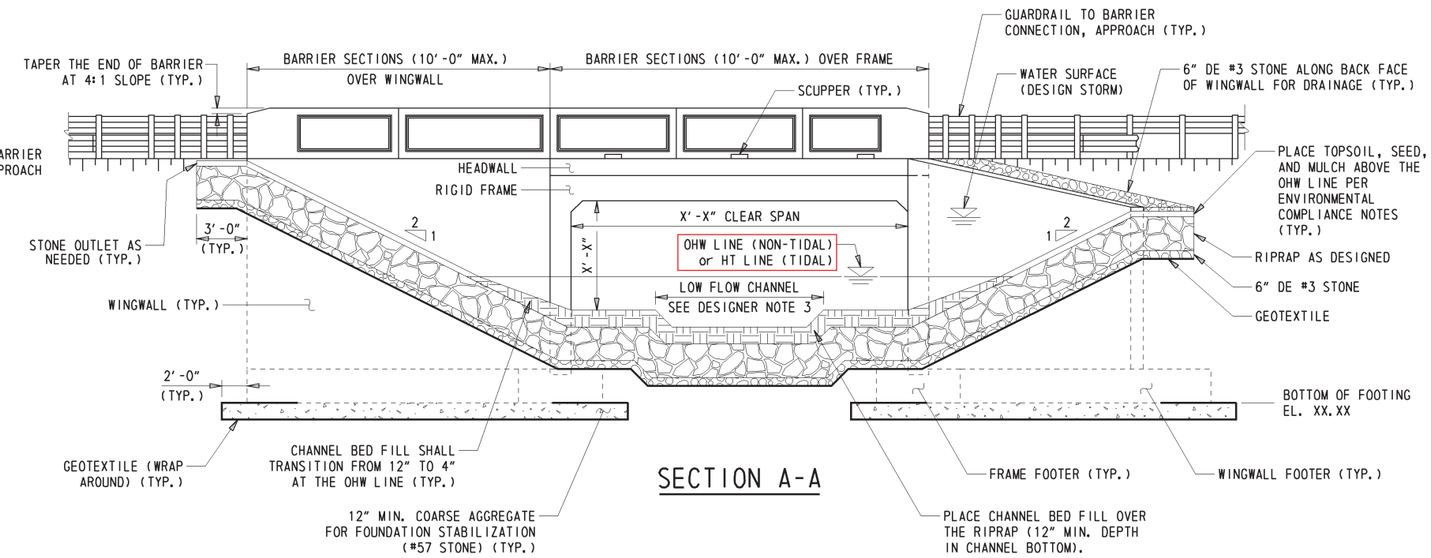

SECTION A-A

NOTE: REFER TO PROJECT SPECIFIC ENVIRONMENTAL COMPLIANCE SHEET(S) FOR FURTHER INFORMATION ON RIPRAP AND TOPSOIL TREATMENT. EXAMPLE IN SECTIONS A-A AND B-B SHOWN USING LOW FLOW CHANNEL.

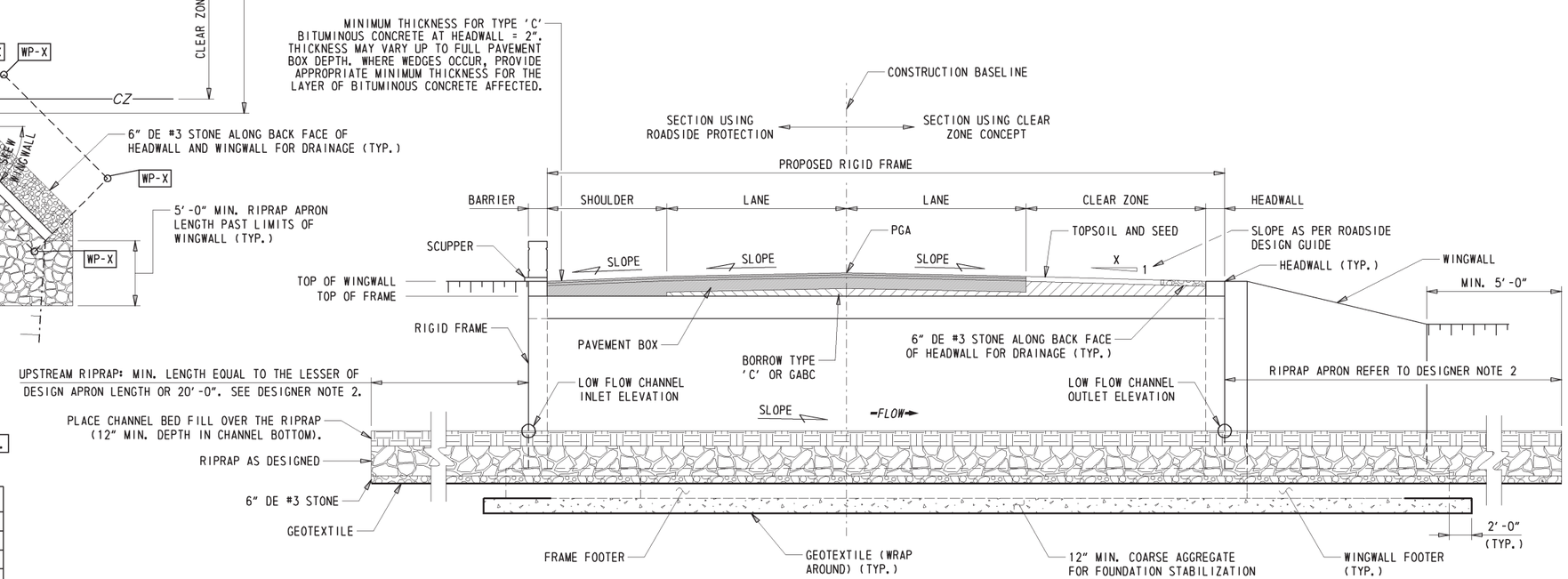

SECTION B-B

NOTE:
-SPECIFY THE NEED FOR A WATERPROOFING MEMBRANE IF BITUMINOUS CONCRETE IS PLACED DIRECTLY ATOP THE RIGID FRAME. IF GABC OR FILL IS PLACED DIRECTLY ATOP THE RIGID FRAME, APPLICATION OF A WATERPROOFING MEMBRANE IS NOT REQUIRED.
-FOR STREAMS ON SHALLOW GRADE, PLACE RIPRAP FLAT AND BUILD APPROPRIATE CHANNEL SLOPE INTO THE CHANNEL BED FILL.

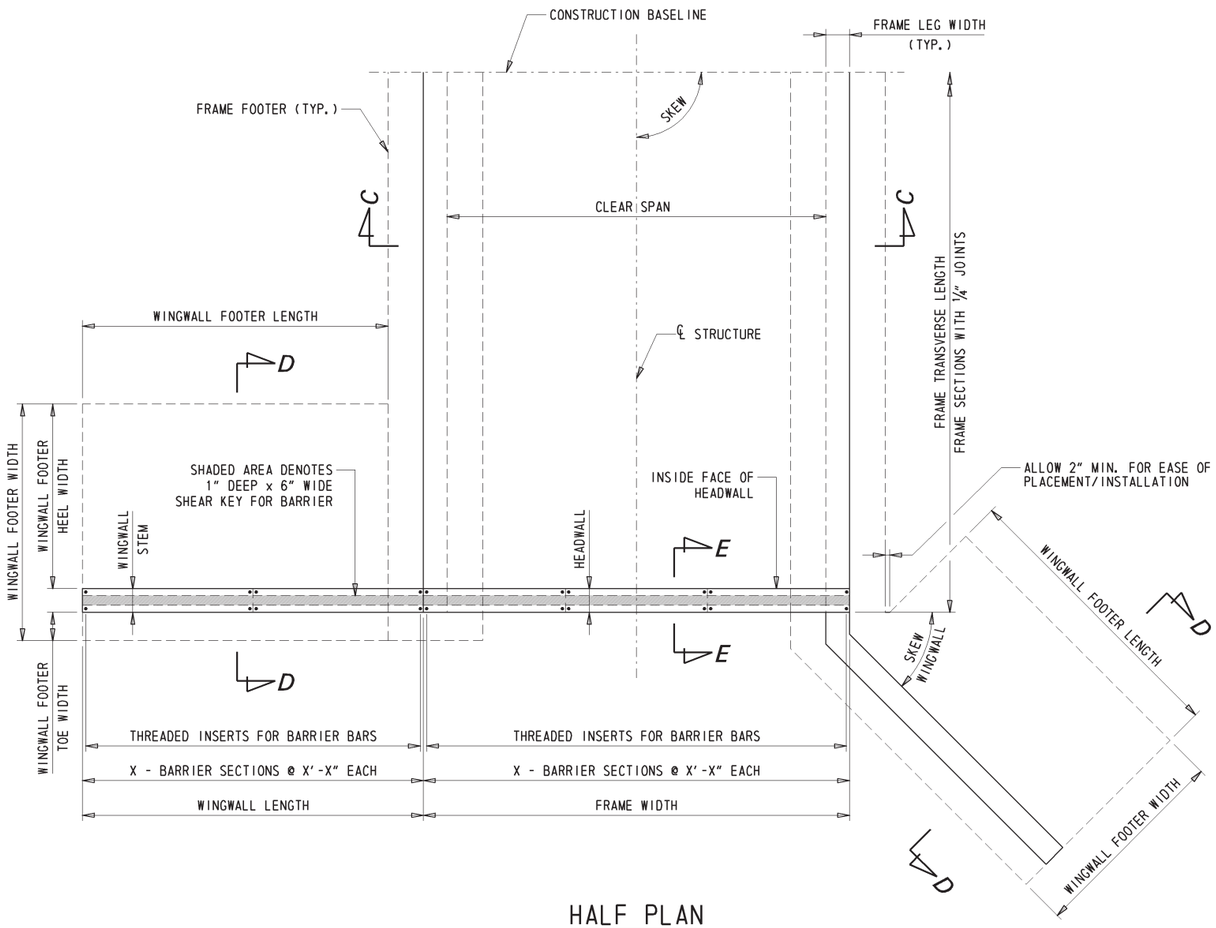

HALF PLAN

NOTE: SECTION WITH ROADSIDE PROTECTION SHOWN. SECTION WITH CLEAR ZONE CONCEPT SIMILAR, BUT OMITS SHEAR KEY AND INSERTS FOR BARRIER.

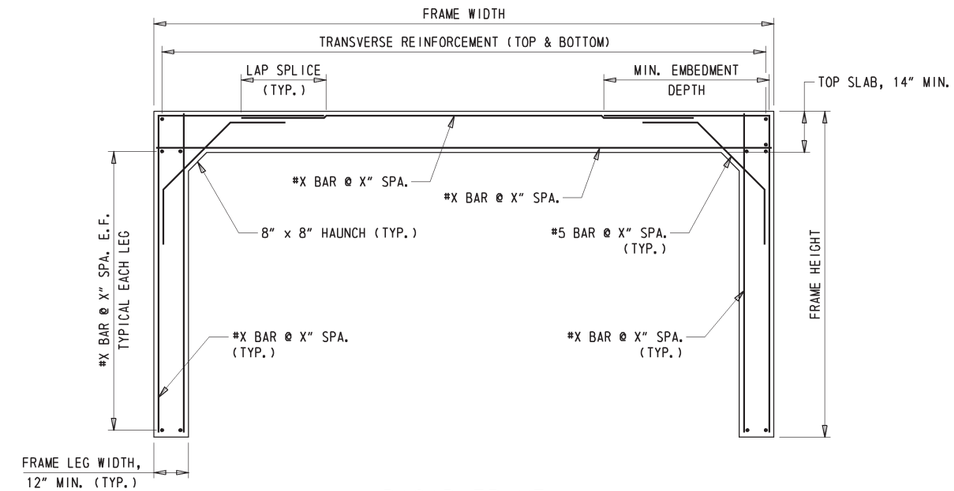

RIGID FRAME

(SECTION C-C)

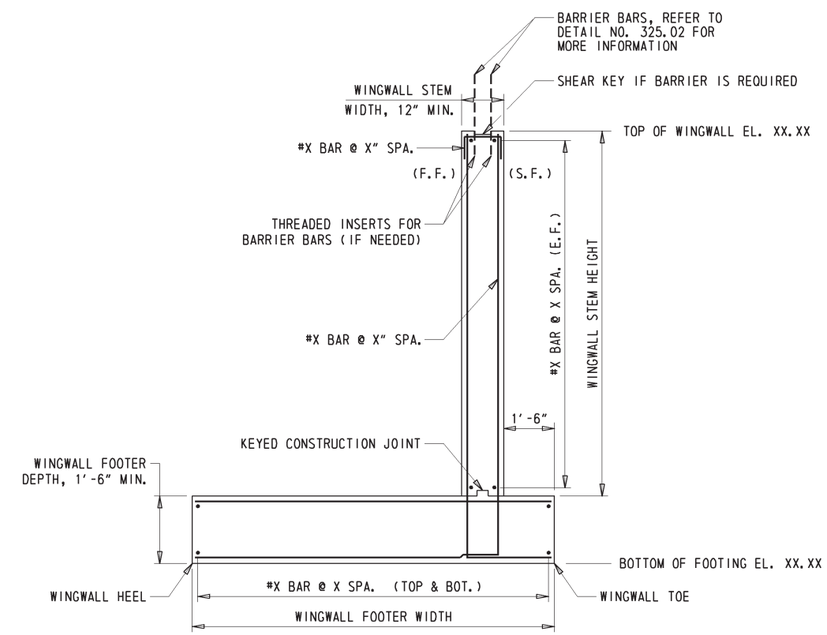

WINGWALL DETAIL

(SECTION D-D)

NOTE: FOR WINGWALL USING CLEAR ZONE CONCEPT OR FLARED WINGWALLS, OMIT SHEAR KEY FOR BARRIER.

LEGEND
E.F. - DENOTES EACH FACE
F.F. - DENOTES FILL FACE
S.F. - DENOTES STREAM FACE

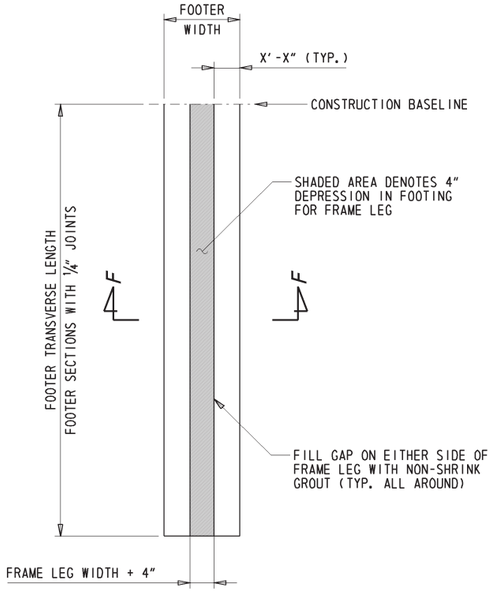

FRAME FOOTER HALF PLAN

(FOR WINGWALLS ATTACHING TO END FACE OF FRAME)

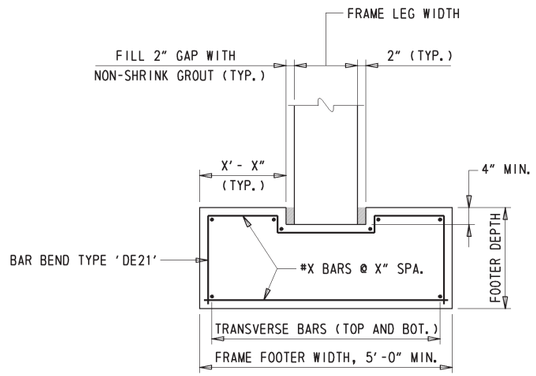

FRAME FOOTER SECTION

(SECTION F-F)

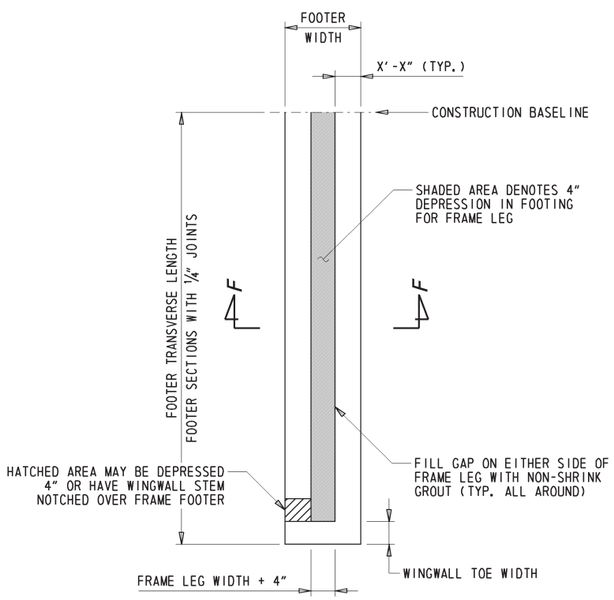

FRAME FOOTER HALF PLAN

(FOR WINGWALLS PARALLEL TO ROADWAY)

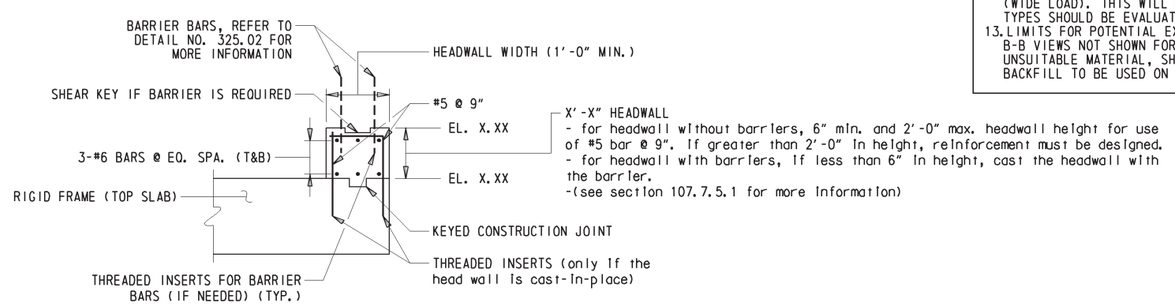

HEADWALL DETAIL

(SECTION E-E)

NOTE: FOR WINGWALL USING CLEAR ZONE CONCEPT OR FLARED WINGWALLS, OMIT SHEAR KEY FOR BARRIER.

DESIGNER NOTES

1. THE HYDRAULIC CAPACITY OF RIGID FRAMES SHALL BE DETERMINED IN ACCORDANCE WITH SECTION 104 - HYDROLOGY AND HYDRAULIC INVESTIGATIONS.
2. THE SIZE AND DIMENSION OF RIPRAP PROTECTION SHALL BE AS REQUIRED BY HYDRAULIC CALCULATIONS. FOR UPSTREAM OR DOWNSTREAM LIMITS, THE MINIMUM LENGTH MAY BE EXTENDED TO FIT FIELD CONDITIONS (BENDS, SCOUR HOLES, ETC.). THE MINIMUM SIZE OF RIPRAP IS R-4 IF BURIED AND R-5 IF EXPOSED. RIPRAP SHALL BE CONTOURED TO MATCH THE SHAPE OF THE EXISTING STREAM BANKS AT THE PROJECT LIMITS.
3. AS DIRECTED BY ENVIRONMENTAL STUDIES SECTION, A LOW FLOW CHANNEL SHALL BE CONSTRUCTED IN THE RIPRAP AND CHANNEL BED FILL. DIMENSIONS OF THE LOW FLOW CHANNEL ARE LOCATION SPECIFIC AND WILL BE PROVIDED BY THE ENVIRONMENTAL STUDIES SECTION.
4. EXAMPLES SHOWN ON SHEET 1 UTILIZE SCUPPERS. THE NEED FOR SCUPPERS SHALL BE EVALUATED ON A CASE BY CASE BASIS.
5. 'GUARDRAIL OVER CULVERTS' AS SHOWN IN DELDOT STANDARD CONSTRUCTION DETAILS MAY BE CONSIDERED FOR SHORT SPAN FRAMES (SPANS OF 18'-6" OR UNDER) IN LIEU OF CONCRETE BARRIERS IF THE WINGWALLS ARE FLARED AND THE WIDTH OF THE FRAME WILL ACCOMMODATE FOR THE MAIN SPACING OF 'GUARDRAIL OVER CULVERTS'.
6. THE EXAMPLES USED FOR RIGID FRAMES IN THIS DETAIL DOES NOT INCLUDE ANY MENTION OF DEEP FOUNDATIONS. GENERALLY FOR RIGID FRAMES, ONE SHOULD STRIVE TO USE SPREAD FOOTERS. IF DEEP FOUNDATIONS ARE REQUIRED, OTHER ALTERNATIVES MAY HAVE TO BE CONSIDERED SUCH AS SINGLE SPAN BRIDGE SUPPORTED BY STUB ABUTMENTS ON DRIVEN PILES.
7. MORE INFORMATION ON BARRIER DETAILS CAN BE FOUND IN DETAIL NO. 325.02 - BRIDGE RAILING DETAILS.
8. WINGWALL LAYOUT:
   THE DESIGNER SHALL CONSIDER THE HEIGHT OF THE ROADWAY EMBANKMENT, THE ELEVATION OF THE SURROUNDING GROUND, AND THE DEPTH OF THE STREAM CHANNEL TO DETERMINE THE WINGWALL LAYOUT.

   (a.) AT SITES WHERE THERE IS LITTLE OR NO ROADWAY EMBANKMENT AND A DEEP CHANNEL, WINGWALLS PARALLEL TO THE ROADWAY ARE THE PREFERRED OPTION. PARALLEL WINGWALLS FOR SECTION WITH ROADSIDE PROTECTION CAN UTILIZE BARRIER ALONG THE ENTIRE LENGTH (AS DEPICTED IN THIS DETAIL) OR BE OFFSET BEHIND GUARDRAIL (NOT DEPICTED IN THIS DETAIL) WHERE THE BARRIER IS PLACED ONLY ON THE RIGID FRAME OR GUARDRAIL OVER CULVERTS IS USED.

   (b.) AT SITES WHERE THERE IS A RELATIVELY TALL ROADWAY EMBANKMENT AND VERY SHALLOW CHANNEL, WINGWALLS PERPENDICULAR TO THE ROADWAY MAY BE USED.

   (c.) FOR CASES IN-BETWEEN (THAT HAVE SOME ROADWAY EMBANKMENT AND SOME CHANNEL DEPTH), ANGLED WINGWALLS ARE PREFERRED. 45° WINGWALLS ARE DEPICTED IN THIS DETAIL, BUT 15°, 30°, AND 60° WINGWALLS MAY BE USED BASED ON SITE CONDITIONS. IN ADDITION, WHERE THE STREAM APPROACHES THE BRIDGE INLET AT AN ACUTE ANGLE OF ATTACK, CONSIDER USING A DIFFERENT WINGWALL ANGLE ON THE OUTSIDE OF THE BEND SO THAT THE WINGWALL CAN ACT AS A GUIDE WALL TO HELP DIRECT FLOW IN TO THE INLET.

   (d.) AT FRAMES WITH A HIGH SKEW ANGLE (GREATER THAN 20°), WINGWALLS WITH BARRIER PARALLEL TO THE ROADWAY CAN BE ADVANTAGEOUS FOR GUARDRAIL TO BARRIER CONNECTION, REGARDLESS OF SITE CONDITIONS.
9. THE FORMER PRECAST NOTES (WEEPHOLES, CONNECTION PLATES, ETC.)INCLUDED IN PAST REINFORCED CONCRETE RIGID FRAME PROJECTS ARE NO LONGER REQUIRED TO BE SHOWN ON THE PLANS. THESE NOTES HAVE BEEN ADDED TO SECTION 612 OF THE DELDOT STANDARD SPECIFICATIONS.
10. PLACEMENT OF WEEPHOLES: WHEN POSSIBLE, PLACE WEEPHOLE OUTLETS ABOVE THE OHW LINE. THE DESIGNER SHOULD CONSIDER USING WEEPHOLES WHERE SPRINGS ARE PREVALENT (PIEDMONT REGION) OR WHEN THE BRIDGE IS IN PRONOUNCED SAG/VALLEY. WEEPHOLES ARE GENERALLY NOT NEEDED WHEN THE STRUCTURE IS IN AN EMBANKMENT.
11. THE DESIGNER SHOULD CONSIDER USE OF PRECAST CONCRETE RIGID FRAMES FOR SPANS OF 14'-0" TO 25'-0".
12. THE DESIGNER SHOULD BE AWARE OF TRANSPORTATION ISSUES ASSOCIATED WITH RIGID FRAMES WITH HEIGHTS GREATER THAN 13'-6", WHICH WILL REQUIRE POLICE ESCORT (WIDE LOAD). THIS WILL LIKELY RESULT IN HIGHER BID PRICE. OTHER BRIDGE TYPES SHOULD BE EVALUATED IF THIS IS THE CASE.
13. LIMITS FOR POTENTIAL EXCAVATION OF UNSUITABLE MATERIAL IN SECTION A-A AND B-B VIEWS NOT SHOWN FOR CLARITY. FOR PROJECTS THAT REQUIRE EXCAVATION OF UNSUITABLE MATERIAL, SHOW LIMITS OF THE EXCAVATION AND SPECIFY TYPE(S) OF BACKFILL TO BE USED ON SECTION A-A AND B-B VIEWS.

This page intentionally left blank.